NEW APARTMENT BUILDING

91 S. THIRD ST., MOUNT WOLF, PA 17347

MOUNT WOLF BOROUGH, YORK COUNTY

PREDIX PROPERTIES IV, LLC

Seth Predix, Developer

815 N. GEORGE ST. SUITE 'A', YORK, PA 17404

GENERAL NOTES

1. **PERMITS:** PERFORM ALL WORK IN COMPLIANCE WITH APPLICABLE FEDERAL, STATE, AND LOCAL CODES & REGULATIONS HAVING JURISDICTION OVER THIS PROJECT. GENERAL CONTRACTOR (GC) APPLIES FOR THE BUILDING PERMIT, PROVIDES CONTRACTOR & BUILDING TRADE REGISTRATIONS, AND ARRANGES FOR REQUIRED INSPECTIONS & GOVERNING APPROVALS.

2. **PROJECT COORDINATION**: GC IS RESPONSIBLE FOR ALL MEANS, METHODS, SAFETY PROVISIONS, AND MANAGEMENT TO PROVIDE A COMPLETE PROJECT IN ACCORDANCE WITH THE CONTRACT DOCUMENTS. CONDUCT FIELD REVIEWS TO VERIFY EXISTING CONDITIONS, DIMENSIONS, UTILITIES, EQUIPMENT CONNECTIONS, AND PRODUCT REQUIREMENTS PRIOR TO COMMENCING SEQUENTIAL WORK. GC IS RESPONSIBLE FOR THEIR SUBCONTRACT WORK AND SHALL BE THE SINGLE POINT OF COMMUNICATIONS WITH THE OWNER/REPRESENTATIVE.

3. **MANUFACTURERS SPECIFICATIONS**: PROVIDE ALL PRODUCT INSTALLATIONS IN ACCORDANCE WITH THE MANUFACTURER'S LATEST PRINTED STANDARDS, ACHIEVING ALL DIMENSIONS, SUBSTRATE PREPARATION, ROUGH-INS, AND CONDITIONS AS MAY BE REQUIRED FOR PRODUCT WARRANTIES.

4. **APPROVALS & WORKMANSHIP**: SUBMIT CATALOG DATA FOR ALL PRODUCTS INCLUDING BUILDING MATERIALS, MILLWORK, VENDOR PROVIDED DOORS/WINDOWS/HARDWARE/EQUIPMENT, MEP FIXTURES, AND COLOR SAMPLES TO THE OWNER/REPRESENTATIVE FOR DESIGN CONFIRMATION AND PROJECT RECORDS. FINALIZE WORK AND PUNCHLIST TO THE SATISFACTION OF THE OWNER/REPRESENTATIVE.

5. **MEP DESIGN**: NEW WORK OR ALTERATIONS TO MECHANICAL, PLUMBING, ELECTRICAL (MEP) SYSTEMS SHALL COMPLY WITH THE UCC AND APPLICABLE ICC CODES. SEE MEP PLANS AND SPECIFICATIONS.

6. **CONSTRUCTION CONTRACT**: GENERAL CONTRACTOR'S STANDARD FORM OF AGREEMENT MUST ADDRESS THE REIMBURSEMENT ARRANGEMENTS, SCOPE OF WORK, SCHEDULE, COMPLETION DATE, ALTERNATES, WARANTIES, EVIDENCE OF INSURANCE, OTHER LEGALITIES, AND COMPLIANCE WITH APPLICABLE CODES & PERMITS. ANY PRODUCT SUBSTITUTIONS OR CHANGES TO THE SCOPE OF WORK MUST COMPLY WITH THE BUILDING PERMIT AND HAVE PRIOR APPROVAL FROM THE OWNER / REPRESENTATIVE.

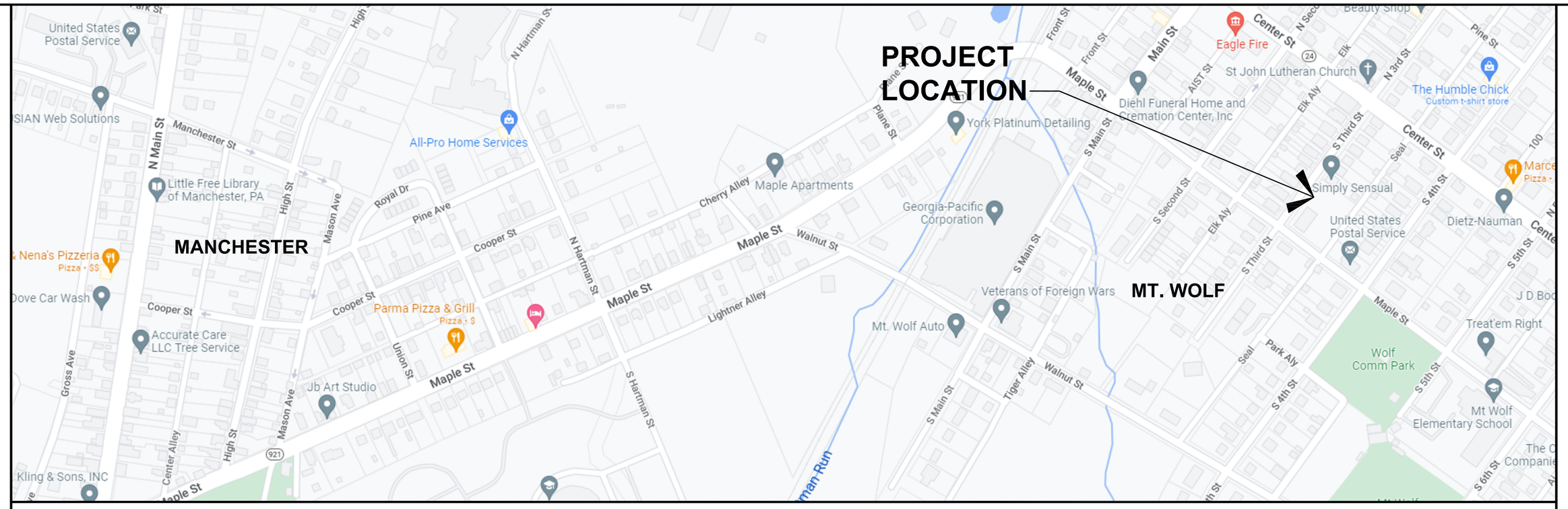

VICINITY PLAN

NO SCALE

LIST OF DRAWINGS

ARCHITECTURAL

A-1 COVER SHEET
A-2.1 CODE NOTES
A-2.2 CODE NOTES & LIFE SAFETY PLAN
A-3 ADA STANDARDS
A-4 FIRST FLOOR PLANS & PARTITION TYPES
A-5 2nd & 3rd FLOOR & ROOF PLANS
A-6 EXTERIOR ELEVATIONS
A-7 WALL SECTIONS - SHEET 1
A-8 WALL SECTIONS - SHEET 2
A-9 INTERIOR ELEVATIONS & MISC. DETAILS
A-10 DOOR & WINDOW SCHEDULES
S-1 STRUCTURAL PLANS & NOTES
M-1 SCHEMATIC MECHANICAL PLANS
P-1 SCHEMATIC PLUMBING PLANS
E-1 SCHEMATIC ELECTRICAL PLANS

LAND DEVELOPMENT

1 OF 8 COVER
2 OF 8 EXISTING CONDITIONS PLAN
3 OF 8 LAND DEVELOPMENT PLAN
4 OF 8 DETAILS
5 OF 8 STORMWATER, GRADING & UTILITY PLAN
6 OF 8 LANDSCAPE & LIGHTING PLAN
7 OF 8 E & S PLAN
8 OF 8 E & S DETAILS

SYMBOL LEGEND

- SECTION NUMBER
- SHEET WHICH SECTION IS SHOWN
- BUILDING CROSS-SECTION LETTER
- SHEET WHICH SECTION IS SHOWN
- DETAIL NUMBER
- SHEET WHICH DETAIL IS SHOWN
- AREA OF DETAIL
- ELEVATION DESIGNATION
- SHEET WHICH DETAIL IS SHOWN
- 204 ROOM NUMBER
- 204 DOOR NUMBER
- EX-1 EXISTING CONDITIONS NOTE
- 1 CONSTRUCTION NOTE
- W-27 WINDOW NUMBER
- 17 PARTITION TYPE TAG
- FLOOR LINE

MATERIAL LEGEND

- BATT INSULATION
- FINISH WOOD
- CRUSHED STONE
- CONCRETE
- PLYWOOD
- RIGID INSULATION
- FACE BRICK
- CONCRETE MASONRY UNITS
- COMPACTED EARTH
- WOOD BLOCKING
- GYPSUM WALL BOARD IN ELEVATION
- ROOF SHINGLES IN ELEVATION
- FACE BRICK IN ELEVATION
- SIDING IN ELEVATION
- NEW WALL - SEE PARTITION TYPE
- NEW DOOR

ABBREVATIONS

ADA	AMERI. W/ DISABILITIES ACT
ACT	ACOUSTICAL CEILING TILE
AFF	ABOVE FINISHED FLOOR
ALT	ALTERNATE
ALUM	ALUMINUM
ARCH	ARCHITECT(URAL)
BD	BOARD
BLDG	BUILDING
BLK	BLOCK(ING)
BRK	BRICK
BW	BOTH WAYS
CJ	CONTROL (CONST.) JOINT
CK	CAULK(ING)
CLG	CEILING
CLR	CLEAR(ANCE)
CMU	CONCRETE MASONRY UNIT
COL	COLUMN
CONC	CONCRETE
CONST	CONSTRUCTION
CONT	CONTINUOUS OR CONTINUE
CONTR	CONTRACT(OR)
CPT	CARPET
CT	CERAMIC TILE
CTR	COUNTER
DEMO	DEMOLISH
DF	DRINKING FOUNTAIN
DIA	DIAMETER
DIM	DIMENSION
DR	DOOR
DTL	DETAIL
DWG	DRAWING
E	EAST
EIFS	EXTERIOR INSUL FINISH SYS
EJ	EXPANSION JOINT
ELEC	ELECTRIC(AL)
ELEV	ELEVATOR / ELEVATION
EPDM	MEMBRANE RUBBER ROOFING
EQ	EQUAL
EW	EACH WAY
EWC	ELECTRIC WATER COOLER
EXG	EXISTING
EXH	EXHAUST
EXP	EXPOSED
EXT	EXTERIOR
FD	FLOOR DRAIN
FE	FIRE EXTINGUISHER
FEC	FIRE EXTINGUISHER CAB.
FIN	FINISH(ED)
FLR	FLOOR(ING)
FPC	FIRE PROTECTION CONTR
FT	FOOT (FEET)
FTG	FOOTING
FUR	FURRED (ING)
GA	GAGE, GAUGE
GB	GRAB BAR
GC	GENERAL CONTRACT(OR)
GL	GLASS, GLAZING
GWB	GYPSUM WALL BOARD
HC	HEATING CONTRACT(OR)
HCP	HANDICAPPED ACCESSIBLE
HDWR	HARDWARE
HM	HOLLOW METAL
HT	HEIGHT
HTG	HEATING
HVAC	HEATING/VENTILATING/ AIR CONDITIONING
HWD	HARDWOOD
IBC	INTERNATIONAL BLDG CODE
INSUL	INSULATE (D), (ION)
INT	INTERIOR
INV	INVERT
JC	JANITOR CLOSET
L	LENGTH
LAM	LAMINATE(D)
LTL	LINTEL
LLV	LONG LEG VERTICAL
LVR	LOUVER
MAS	MASONRY
MAX	MAXIMUM
MECH	MECHANIC(AL)
MFR	MANUFACTURE(ER)
MIN	MINIMUM
N	NORTH
NIC	NOT IN CONTRACT
NOM	NOMINAL
NRC	NOISE REDUCTION COEFFICIENT
NTS	NOT TO SCALE
OC	ON CENTER(S)
OD	OUTSIDE DIAMETER
OPG	OPENING
PC	PLUMBING CONTRACT(OR)
PLAM	PLASTIC LAMINATE
PNT	PAINT
PROJ	PROJECT
PSF	POUNDS/SQUARE FOOT
PSI	POUNDS/SQUARE INCH
PTN	PARTITION
PVC	POLYVINYL CHLORIDE
PLYWD	PLYWOOD
QT	QUARRY TILE
RAD	RADIUS
RD	ROOF DRAIN
REF	REFERENCE
RM	ROOM
RO	ROUGH OPENING
RWC	RAINWATER CONDUCTOR
S	SOUTH
SF	SQUARE FOOT (FEET)
SFGL	SAFETY GLASS
SPEC	SPECIFICATION(S)
SQ	SQUARE
SS	STAINLESS STEEL
STD	STANDARD
STL	STEEL
TG	TEMPERED GLASS
THK	THICK(NESS)
TYP	TYPICAL
UC	UNDERCUT
UNO	UNLESS NOTED OTHERWISE
VB	VAPOR BARRIER
VCT	VINYL COMPOSITION TILE
W	WIDE, WEST, WIDTH
WC	WATER CLOSET
WD	WOOD
WSCT	WAINSCOT
WWF	WELDED WIRE FABRIC

CONSULTANT TEAM

ARCHITECTURAL DESIGN
PHILIP A. FREY, AIA,
PROJECT ARCHITECT
717.515.3508
pfrey1@comcast.net

CIVIL ENGINEER
JOHNSTON AND ASSOCIATES, INC.
ERIC P. JOHNSTON, P.E.
2386 TAXVILLE ROAD
YORK, PA 17408
717.793.9595
johnston7@comcast.net

COMMONWEALTH OF PENNSYLVANIA
REGISTERED PROFESSIONAL
ERIC P. JOHNSTON
ENGINEER
NO. 036205 - P

10/10/2022

REVISIONS / SUBMISSIONS

PERMIT DRAWINGS 10/7/22

JOHNSTON AND ASSOCIATES, INC.
CONSULTING ENGINEERS LAND DEVELOPMENT CONSULTANTS STRUCTURAL ENGINEERS
ERIC P. JOHNSTON, P.E.
2386 TAXVILLE ROAD YORK, PA 17408
office (717) 793-9595 fax (717) 793-9606

PREDIX PROPERTIES IV, LLC
Seth Predix, Developer
815 N. GEORGE ST. SUITE 'A' YORK, PA 17404
OFFICE: 717-781-4856

COVER SHEET
NEW APARTMENT BUILDING
91 S. THIRD ST., MOUNT WOLF, PA 17347
MOUNT WOLF BOROUGH, YORK COUNTY

DATE .
SCALE AS NOTED
DWN BY JACK SANDS
DESIGN BY PHIL FREY, AIA
SHEET 1 OF 15
A-1

BUILDING CODE NOTES

NOTE: THE ARCHITECT'S BUILDING DESIGN CONTRACT WITH THE OWNER WAS SIGNED 9/4/20. IT INCLUDED THE RENOVATED SCHOOL BUILDING WHICH HAS SEPARATE "PERMIT DRAWINGS DATED 11/23/20" AND THIS NEW 12-UNIT APARTMENT BUILDING WHICH WAS DELAYED AND IS NOW BEING SUBMITTED IN 2022.

FOLLOWING IS A SUMMARY OF MAJOR BUILDING CODE TOPICS THAT APPLY TO THIS PROJECT:

GOVERNING BUILDING CODES
PA UNIFORM CONSTRUCTION CODE (UCC) WHICH REFERENCES:
2015 INTERNATIONAL EXISTING BUILDING CODE (IEBC).
2015 INTERNATIONAL BUILDING CODE (IBC).
2015 INTERNATIONAL PLUMBING CODE (IPC).
2015 INTERNATIONAL MECHANICAL CODE (IMC).
2014 NATIONAL ELECTRIC CODE (NEC), OR APPLICABLE ADDITION.
2015 INTERNATIONAL ENERGY CONSERVATION CODE (IECC).
ICC/ANSI A117.1 - 2009 ACCESSIBLE FACILITIES STANDARDS.
2018 IBC CHAPTER 11, ACCESSIBILITY, ADOPTED BY PA UCC IN A 6/15/19 BULLETIN.
THE PA UCC DESCRIPTION IS FOUND ON THE WEBSITE: WWW.DLI.PA.GOV/UCC.

PROJECT DESCRIPTION

NEW 12-UNIT APARTMENT BUILDING, 3-STORIES WITH 4 UNITS ON EACH FLOOR.

CLASSIFICATIONS

OCCUPANCY CLASSIFICATION:

RESIDENTIAL, GROUP R-2, APARTMENTS (IBC 310.1): R-2 IS DEFINED AS OCCUPANCIES WITH MORE THAN 2 DWELLING UNITS, SUCH AS APARTMENTS, DORMITORIES. **COMPLIANCE NOTE: THERE ARE 12 R-2 NEW APARTMENTS.**

CONSTRUCTION CLASSIFICATION: TYPE V-B (#5B) WOOD FRAME, NONPROTECTED (IBC 602.5).

SQUARE FOOTAGE:

FIRST FLOOR	4,288 SF (GROSS)
SECOND FLOOR	4,288 SF
THIRD FLOOR	4,288 SF
BUILDING TOTAL	12,864 SF

BUILDING HEIGHT: APPROX 35' TO ROOF SOFFIT, + 13' TO RIDGE.
TOTAL HEIGHT = 48', VARIANCE WAS GRANTED.

OCCUPANCY LOAD: (IBC TABLE 1004.1.1) 200 GROSS SF PER PERSON.
6 PER APARTMENT X 12 UNITS = 72 OCCUPANCY.
REFER TO LIFE SAFETY PLAN.

COMPLIANCE TO (IBC) INTERNATIONAL BUILDING CODE, 2015

IBC CHAPTER 3, USE AND OCCUPANCY CLASSIFICATION

310.4 RESIDENTIAL GROUP R-2: APARTMENT HOUSES.

COMPLIANCE NOTE: THE ENTIRE BUILDING IS R-2.

IBC CHAPTER 4, SPECIAL DETAILED REQUIREMENTS BASED ON USE & OCCUPANCY

SECTION 420, GROUP R-2 APARTMENTS

420.2 SEPARATION WALLS: R-2 DWELLING UNITS SHALL BE SEPARATED BY "FIRE PARTITIONS", IBC 708, WHICH REQUIRES 1-HOUR RATING. **COMPLIANCE NOTE: NEW DEMISING WALLS BETWEEN APARTMENTS SHALL BE 1-HOUR RATED, SEE WALL TYPES.**

420.3 HORIZONTAL SEPARATION: R-2 DWELLING UNITS SHALL BE SEPARATED BY FLOOR ASSEMBLIES, IBC 711.2.4.3 WHICH REQUIRES 1-HOUR RATING. **COMPLIANCE NOTE: AT THE 2ND & 3RD FLOORS, THE FLOOR ASSEMBLY SHALL BE A UL 1-HOUR RATED ASSEMBLY, REFER TO THE WALL SECTIONS.**

420.5 AUTOMATIC SPRINKLER SYSTEM: GROUP R OCCUPANCIES SHALL BE SPRINKLER. **COMPLIANCE NOTE: ENTIRE BUILDING WILL BE SPRINKLERED. FIRE PROTECTION DRAWINGS MEETING NFPA13R SHALL BE SUBMITTED AS A DEFERRED SUBMISSION.**

IBC CHAPTER 5, BUILDING HEIGHT & SIZE

TABLE 504.3 ALLOWABLE HEIGHT:

OCCUPANCY R-2: SPRINKLERED S13R, TYPE #5-B CONSTRUCTION, 60' MAXIMUM.

COMPLIANCE NOTE: BUILDING IS 48' HEIGHT AND COMPLIES.

TABLE 504.4 ALLOWABLE STORIES ABOVE GRADE:

OCCUPANCY R-2: SPRINKLERED S13R TYPE #5-B CONSTRUCTION, 3 STORIES.

COMPLIANCE NOTE: THE 3 STORY BUILDING COMPLIES.

TABLE 506.2 ALLOWABLE AREA:

OCCUPANCY R-2: SPRINKLERED S13R TYPE #5-B CONSTRUCTION = 7,000 SF MAXIMUM. **COMPLIANCE NOTE: EACH FLOOR AREA IS 4,288 SF AND COMPLIES.**

IBC CHAPTER 6, TYPES OF CONSTRUCTION

602.5 TYPE #5-B, WOOD FRAME: WHERE THE WALLS, ROOF, PARTITIONS, FLOORS ARE OF WOOD, AND NOT PROTECTED WITH FIRE RATED DRYWALL, **COMPLIANCE NOTE: THE ENTIRE BUILDING IS CONVENTIONAL WOOD FRAME, TYPE #5B.**

TABLE 601 FIRE RESISTANCE RATING REQUIREMENTS FOR BUILDING ELEMENTS: FOR TYPE #5-B: 0-HOUR RATING FOR STRUCTURAL FRAMING, BEARING WALLS FOR EXTERIOR & INTERIOR, ROOF CONSTRUCTION, FLOOR CONSTRUCTION, NON-BEARING PARTITIONS FOR EXTERIOR & INTERIOR. **COMPLIANCE NOTE: THE NEW APARTMENT CONSTRUCTION WILL BE TYPE #5-B CONSTRUCTION.**

TABLE 602 FIRE RESISTANCE RATING REQUIREMENTS FOR EXTERIOR WALLS BASED ON SEPARATION DISTANCE: FOR TYPE #5-B CONSTRUCTION, R-2 OCCUPANCY, FOR A SEPARATION DISTANCE OF 10' TO 30', 0-HOUR FIRE RATING IS REQUIRED FOR THE EXTERIOR WALL. **COMPLIANCE NOTE: THE BUILDING HAS MORE THAN THE REQUIRED SEPARATION DISTANCES AND THE EXTERIOR WALL REQUIRES 0-HOUR FIRE RATING.**

IBC CHAPTER 7, FIRE & SMOKE PROTECTION FEATURES

707.3.3 FIRE BARRIERS, ENCLOSURE FOR EXIT ACCESS STAIRWAY: VERTICAL SHAFTS SHALL COMPLY WITH IBC 713.4, 1-HOUR RATING WHEN CONNECTING LESS THAN 4 STORIES. **COMPLIANCE NOTE: THE STAIRWAY WALLS ARE SHOWN TO BE 1-HOUR RATED. COMPLIES.**

SECTION 708 FIRE PARTITIONS

708.1.1 SEPARATION WALLS FOR GROUP R-2. RFFER 420.2.

708.3 FIRE PARTITIONS: APARTMENTS SHALL HAVE 1-HOUR RATED SEPARATION WALLS, AS REQUIRED BY SECTION 420. **COMPLIANCE NOTE: DEMISING WALLS BETWEEN APARTMENTS HAVE 1-HOUR RATED SEPARATION WALLS. COMPLIES.**

708.4 FIRE PARTITION CONTINUITY: "FIRE PARTITIONS" SHALL RUN FROM THE TOP OF THE FLOOR ASSEMBLY TO THE BOTTOM OF THE CEILING ASSEMBLY ABOVE, OR TO THE UNDERSIDE OF THE FLOOR/DECK/SLAB/ROOF SHEATHING ABOVE. WHEN THE FIRE PARTITION IS NOT CONTINUOUS AND IS CONSTRUCTED OF COMBUSTIBLE MATERIAL, THE SPACE BETWEEN THE CEILING AND THE FLOOR/DECK/SLAB/ROOF SHEATHING SHALL BE FIRE BLOCKED OR DRAFTSTOPPED IN ACCORDANCE WITH 718.2 OR 718.3 AT THE PARTITION LINE. **COMPLIANCE NOTE: ABOVE ALL FIRE PARTITIONS (TYPICALLY THE APARTMENT DEMISING PARTITIONS), THE PARTITIONS SHALL RUN TO THE UNDERSIDE OF THE DECK.**

711.2.4.3 DWELLING UNIT HORIZONTAL ASSEMBLIES: FLOORS SEPARATING DWELLING UNITS IN ACCORDANCE WITH SECTION 420.3 SHALL BE 1 HOUR RATED. **COMPLIANCE NOTE: THE FIRST FLOOR IS SLAB ON GRADE. THE 2ND AND 3RD FLOORS ARE SHOWN TO BE 1-HOUR RATED.**

713.4 FIRE RESISTANCE RATING FOR SHAFT ENCLOSURES: WHEN CONNECTING LESS THAN 4 STORIES, SHAFT ENCLOSURES REQUIRE A FIRE RESISTANCE RATING OF NOT LESS THAN 1-HOUR. **COMPLIANCE NOTE: THE STAIRWAY SHAFT IS 1-HOUR RATED AS SHOWN ON THE LIFE SAFETY PLAN.**

714.3.1.2 THROUGH-PENETRATION FIRE STOP SYSTEM: FIRE RATED CAULKING IS REQUIRED TO MAINTAIN THE DESIGNATED FIRE RESISTANCE RATING OF WALLS & PARTITIONS. **REQUIRED.**

TABLE 716.5 FIRE RATED DOORS:

1-HOUR FIRE BARRIERS REQUIRE 60-MINUTE RATED DOORS, 100 SQ. IN. OF FIRE RATED GLAZING MARKED D-H-60. **COMPLIANCE NOTE: STAIRWELL AND APARTMENT DOORS ARE 60-MINUTE RATED.**

718.3 DRAFT STOPPING IN FLOORS: REQUIRED IN FLOOR/CEILING SPACES IN R-2 TO SEPARATE 3 OR MORE DWELLING UNITS. **COMPLIANCE NOTE: EVERY UNIT WILL BE SEPARATED BY 1-HOUR DEMISING WALLS THAT EXTEND TO THE DECK ABOVE.**

718.3.1 DRAFT STOPPING MATERIALS: SHALL NOT BE LESS THAN ½" GYPSUM BOARD OR 3/8" PARTICLEBOARD. **COMPLIANCE NOTE: PROVIDE DRAFT STOPPING IN THE ATTIC AS SHOWN.**

718.4.2 ATTIC DRAFT STOPPING, EXCEPTION 3: IN R-2 NOT EXCEEDING 4 STORIES, THE ATTIC SHALL BE SUBDIVIDED BY DRAFTSTOPS ABOVE EVERY 2 UNITS; UNLESS THE ATTIC IS SPRINKLERED. **COMPLIANCE NOTE: THE ATTIC WILL BE SEPARATED BY ONE ATTIC DRAFT STOP WITH (2) UNITS ON EACH SIDE BELOW.**

IBC CHAPTER 8, INTERIOR FINISHES

803.1.1 INTERIOR WALL & CEILING FINISH: CLASS C FLAME SPREAD INDEX 76-200; SMOKE-DEVELOPED INDEX IS 0-450.

TABLE 803.11 INTERIOR WALL FINISH FLAME SPREAD REQUIREMENTS, SPRINKLERED SR13, R-2 OCCUPANCY: ROOMS = CLASS C; STAIRS & CORRIDORS = CLASS C.

COMPLIANCE NOTE: LUXURY VINYL FLOOR TILE, DRYWALL PARTITIONS & CEILINGS COMPLY.

IBC CHAPTER 9, FIRE PROTECTION SYSTEMS

903.2.8 GROUP R OCCUPANCY: FOR NEW APARTMENT CONSTRUCTION, AN AUTOMATIC SPRINKLER SYSTEM IS REQUIRED THROUGHOUT THE ENTIRE BUILDING. **COMPLIANCE NOTE: THE ENTIRE BUILDING IS SPRINKLERED.**

903.3.1.2 NFPA 13R SPRINKLERS SYSTEMS: FOR GROUP R RESIDENTIAL BUILDINGS 4 STORIES AND UNDER, THE ENTIRE BUILDING SHALL RECEIVE A NFPA 13R SPRINKLER SYSTEM. **COMPLIANCE NOTE: NFPA 13R SPRINKLER SYSTEM IS BEING PROVIDED THROUGHOUT. DELEGATED DESIGN NICET-SEALED DRAWINGS TO BE SUBMITTED DURING THE CONSTRUCTION PHASE.**

903.3.2 QUICK-RESPONSE AND RESIDENTIAL SPRINKLERS REQUIRED IN GROUP R DWELLING UNITS. **REQUIRED.**

903.3.5.2 RESIDENTIAL COMBINED SERVICE: A SINGLE COMBINED WATER & FIRE SPRINKLERS SHALL BE ALLOWED FOR NFPA 13R SYSTEMS. **CONSULT WITH LOCAL WATER COMPANY.**

903.4 SPRINKLER SYSTEM SUPERVISION AND ALARMS: CODE REQUIREMENTS WILL BE SPECIFIED BY THE SPRINKLER SYSTEM DELEGATED DESIGN SHOP DRAWINGS.

SECTION 906 PORTABLE FIRE EXTINGUISHERS: PROVIDE IN ACCORDANCE WITH 2009 INTERNATIONAL FIRE CODE, AND NFPA 10.

TABLE 906.3(1) FIRE EXTINGUISHERS FOR CLASS A FIRE HAZARDS: FOR SECTION 906.1 EACH DWELLING UNIT SHALL BE PROVIDED WITH A PORTABLE FIRE EXTINGUISHER RATED 1-A:10-B:C. PROVIDE A 2-A RATED FIRE EXTINGUISHER FOR EACH 3000 SF, AND WITHIN A MAX. 75' TRAVEL DISTANCE. CLASS A FIRE HAZARDS IS FOR ORDINARY COMBUSTIBLE MATERIALS SUCH AS WOOD, CLOTH, PAPER, AND RUBBER. **COMPLIANCE NOTE: PROVIDE (1) FIRE EXTINGUISHER IN EACH APARTMENT. PROVIDE (1) FIRE EXTINGUISHER ON THE FIRST FLOOR OF THE STAIRWAY.**

907.2.11.2 GROUP R-2 SMOKE ALARM SYSTEM: MULTIPLE-SMOKE ALARM SHALL BE INSTALLED WITH DETECTORS LOCATED IN EACH BEDROOM, OUTSIDE BEDROOMS, AND ON EACH FLOOR. **COMPLIANCE NOTE: PROVIDED, SEE ELECTRICAL DRAWINGS.**

907.2.9.1 MANUAL FIRE ALARM SYSTEM, EXCEPTION 2: WHEN EQUIPPED WITH AN AUTOMATIC SPRINKLER 13R SYSTEM, GROUP R-2 OCCUPANCY, MANUAL FIRE ALARM BOXES ARE NOT REQUIRED WHEN THE NOTIFICATION APPLIANCES WILL AUTOMATICALLY ACTIVATE WITH A SPRINKLER WATER FLOW. **COMPLIANCE NOTE: MANUAL FIRE ALARM MANUAL BOXES ARE NOT REQUIRED BECAUSE THE BUILDING IS SPRINKLERED.**

IBC CHAPTER 10, MEANS OF EGRESS

1003.2 HEAD HEIGHT: 7'-6" HEIGHT FOR MEANS OF EGRESS, 6'-8" AT CEILING PROJECTIONS.

1003.3.3 HORIZONTAL PROJECTIONS: PROJECTIONS LIMITED TO 4" FROM WALL BETWEEN 27" - 80" HEIGHT.

TABLE 1004.1 & 2, FLOOR AREA PER OCCUPANT:

RESIDENTIAL: 200 SF GROSS.

COMPLIANCE NOTE: REFER TO CALCULATIONS AS SHOWN ON THE LIFE SAFETY PLAN. APARTMENTS ARE LESS THAN 1200 SF, WHICH CALCULATES TO 6 OCCUPANCY PER UNIT.

1005.3.1 & 2 MINIMUM REQUIRED EGRESS WIDTH: THE MEANS OF EGRESS MULTIPLIER WIDTH PER OCCUPANT SERVED IS 0.3" FOR STAIRWAYS AND 0.2" FOR OTHER EGRESS COMPONENTS. MULTIPLE EXITS SHALL BE SIZED SO THE LOSS OF ONE MEANS OF EGRESS SHALL NOT REDUCE AVAILABLE CAPACITY TO LESS THAN 50% OF THE REQUIRED CAPACITY. NOTE: A SINGLE EXIT 36" DOOR LOCATION = 34" CLEAR / .2 = 170 EXIT CAPACITY.

COMPLIANCE NOTE: ALL EXIT DOORS HAVE A MINIMUM OF A SINGLE 36" EXIT DOOR NO CALCULATED OCCUPANCY LOAD REQUIRES MORE THAN THE PROVIDED SINGLE EXIT DOORS; REFER TO THE LIFE SAFETY PLAN.

1005.7.1 DOOR ENCROACHMENT: DOORS SWINGING INTO THE PATH OF EGRESS TRAVEL SHALL NOT REDUCE THE REQUIRED WIDTH TO LESS THAN 1/2 AND WHEN FULLY OPEN, AND NOT PROJECT MORE THAN 7". **COMPLIANCE NOTE: ALL (12) APARTMENT ENTRANCE DOORS SWING IN WITH NO ENCROACHMENT INTO THE CORRIDOR. ALL DOOR LAYOUTS COMPLY.**

TABLE 1006.2.1 SPACES WITH ONE EXIT OR EXIT ACCESS DOORWAY: FOR SPRINKLERED R-2 OCCUPANCY NOT GREATER THAN 10 OCCUPANTS IN AN APARTMENT, THE "MAXIMUM COMMON PATH OF EGRESS" IS 125'. **COMPLIANCE NOTE: EACH R-2 APARTMENT HAS (1) OFFICIAL EXIT, WITH AN INTERNAL COMMON PATH OF EGRESS TRAVEL DISTANCE OF LESS THAN 60' TO REACH THE EXIT.**

TABLE 1006.3.2(1) STORIES WITH ONE EXIT FOR R-2 OCCUPANCY: FOR 3-STORY R-2 BUILDING, MAXIMUM (4) DWELLING UNITS PER FLOOR, (1) EXIT WITH A COMMON TRAVEL DISTANCE OF 125' IS ALLOWED. **COMPLIANCE NOTE: FOR THIS BUILDING THE SINGLE STAIRWAY COMPLIES AS THE MEANS OF EGRESS. IT SERVES (3) STORIES, (4) DWELLING UNITS ON EACH FLOOR, COMMON TRAVEL DISTANCE LIMITED TO APPROX. 60' WITHIN EACH UNIT TO REACH THE EXIT STAIRWAY, WITH (2) EXITS FROM THE STAIRWAY AVAILABLE FROM THE 1ST FLOOR. COMPLIES.**

1008 MEANS OF EGRESS ILLUMINATION: EMERGENCY LIGHTING IS NOT REQUIRED WITHIN APARTMENTS AND IS REQUIRED IN THE CORRIDORS AND PUBLIC AREAS. **EMERGENCY LIGHTING IS PROVIDED IN THE PUBLIC AREAS. SEE ELECTRICAL DRAWINGS.**

1009.1 ACCESSIBLE MEANS OF EGRESS: IF SPACES ARE REQUIRED TO BE ACCESSIBLE, THAN AT LEAST ONE ACCESSIBLE MEANS OF EGRESS SHALL BE PROVIDED. **COMPLIES. THE ENTIRE FIRST FLOOR IS ACCESSIBLE, WITH (2) ACCESSIBLE ENTRANCE DOORS. REFER TO SECTION 1105.1.**

1010.1.1 SIZE OF DOORS: PROVIDE 32" CLEAR DOOR LEAF AT EXITS. MAXIMUM IS 48"W. **COMPLIANCE NOTE: EACH DWELLING UNIT ENTRY DOOR AND ALL EXIT DOORS ARE 36"W DOORS, AND HAVE 32" MINIMUM CLEARANCE.**

1010.1.5 FLOOR ELEVATION: THERE SHALL BE THE SAME ELEVATION ON BOTH SIDES OF DOORS. EXTERIOR LANDINGS CAN SLOPE 0.25/12 (2-PERCENT SLOPE). **COMPLIES.**

1010.1.10 PANIC & FIRE EXIT HARDWARE: EXIT DOORS SERVING AN OCCUPANCY LOAD OF 50 OR MORE IN GROUP A & E SHALL HAVE PANIC HARDWARE AT EXIT DOORS, FIRE RATED AT RATED ASSEMBLIES. **COMPLIANCE NOTE: ALTHOUGH NOT LISTED FOR R-2 BUILDINGS, AS A BEST PRACTICE THE STAIRWAY EXIT DOORS WILL HAVE PANIC HARDWARE.**

SECTION 1011 STAIRWAYS

1011.2 STAIRWAY WIDTH; SERVING MORE THAN 50 OCCUPANCY, 44" MIN. WIDTH. **COMPLIANCE NOTE: THE STAIRWAY WIDTH IS MIN. 48" WIDE AND COMPLIES.**

1011.3 STAIRWAY HEADROOM: MAINTAIN 80" MEASURED VERTICALLY FROM NOSING, AND AT LANDINGS.

1011.5 TREADS & RISERS: 7" MAX RISERS; 11" MAX. TREADS; 1-1/4" MAX. NOSING.

1011.6 STAIRWAY LANDINGS: REQUIRED AT TOP & BOTTOM OF STAIR RUNS, NOT LESS THAN THE STAIR WIDTH.

1011.7 STAIRWAY CONSTRUCTION: SHALL MEET THE BUILDING CLASSIFICATION TYPE. **COMPLIANCE NOTE: WOOD STAIRS ARE ALLOWED AND SHOWN WITHIN THE 1-HOUR RATED STAIRWELL.**

1011.11 HANDRAILS: PUBLIC STAIRS REQUIRED ON BOTH SIDES OF STAIRS. **COMPLIANCE NOTE: PROVIDED.**

1012.8 HANDRAILS AT RAMPS: RAMPS WITH A RISE GREATER THAN 6" SHALL HAVE A RAILING ON EACH SIDE. **COMPLIANCE NOTE: NO RAMPS ARE SHOWN.**

1013.1 EXIT SIGNS: EXIT PASSAGEWAYS & DOORS SHALL BE MARKED WITH EXIT SIGNS THAT ARE INTERNALLY OR EXTERNALLY ILLUMINATED, AND BE NOT MORE THAN 100' APART. EXCEPTION 3: EXIT SIGNS ARE NOT REQUIRED IN R-2 INDIVIDUAL DWELLING UNITS. **COMPLIANCE NOTE: INTERNALLY ILLUMINATED EXIT SIGNS ARE SHOWN IN THE STAIRWAY. SEE ELECTRICAL DRAWINGS.**

1013.3 EXIT SIGNS SHALL BE LIGHTED: INTERNALLY LIGHTED. **PROVIDED IN STAIRWAY.**

1013.4 TACTILE BRAILLE EXIT SIGNS: REQUIRED AT ALL EXITS.

1014.2 HANDRAIL HEIGHT: NOT LESS THAN 34" AND NOT MORE THAN 38".

1014.4 HANDRAIL CONTINUITY: GRIPPING SURFACE SHALL NOT BE INTERRUPTED BY NEWEL POSTS, EXCEPT WITHIN DWELLING UNITS.

1014.6 HANDRAIL EXTENSIONS: HANDRAILS SHALL RETURN TO A WALL, GUARD, OR THE WALKING SURFACE. HANDRAILS SHALL EXTEND HORIZONTALLY 12" BEYOND THE TOP RISER AND CONTINUE TO SLOPE FOR THE DEPTH OF ONE TREAD BEYOND THE BOTTOM RISER. HANDRAILS AT RAMPS SHALL EXTEND HORIZONTALLY 12" BEYOND THE TOP AND BOTTOM OF RAMP RUNS. THE EXTENSIONS SHALL BE IN THE SAME DIRECTION AS THE RUNS.

1014.7 HANDRAIL CLEARANCE: MAINTAIN 1-1/2" CLEAR SPACE BETWEEN HANDRAIL WALL OR OTHER SURFACE.

1015.1 GUARDS: SHALL BE REQUIRED ON THE OPEN-SIDE OF WALKING SURFACES, STAIRS, RAMPS, & LANDINGS AT LOCATIONS MORE THAN 30" ABOVE THE FLOOR. 1015.3 REQUIRES 42" HEIGHT, 1015.4 REQUIRES OPENINGS TO BE LIMITED TO NOT ALLOW A 4" SPHERE TO PASS.

COMPLIANCE NOTE: N/A AT THIS NEW BUILDING.

TABLE 1017.2 EXIT ACCESS TRAVEL DISTANCE: WITH SPRINKLERS, GROUP R = 250 LF.

COMPLIANCE NOTE: THE MAXIMUM TRAVEL DISTANCES COMPLY. REFER TO LIFE SAFETY PLAN.

1023.1 INTERIOR EXIT STAIRWAYS: SHALL BE ENCLOSED AND LEAD DIRECTLY TO AN EXIT TO THE EXTERIOR OF THE BUILDING, OR TO AN EXIT PASSAGEWAY WHICH LEADS TO THE EXTERIOR. **COMPLIANCE NOTE: THE STAIRWAY COMPLIES.**

1030.1 EMERGENCY ESCAPE & RESCUE: IN GROUP R-2 OCCUPANCY IN ADDITION TO THE (1) EXIT REQUIRED BY TABLE 1006.3.2.(1) FOR APARTMENTS WITH ONLY (1) EXIT WITHIN 125' MAXIMUM COMMON PATH OF EGRESS TRAVEL DISTANCE, SLEEPING ROOMS BELOW THE FOURTH FLOOR SHALL BE PROVIDED WITH ONE EXTERIOR EMERGENCY ESCAPE & RESCUE OPENING TO A PUBLIC WAY OR YARD, WITH A 5.7 SF MINIMUM DIMENSION, MINIMUM 24"H X 20"W, AND THE BOTTOM OF THE CLEAR OPENING NOT GREATER THAN 44" MEASURED FROM THE FLOOR. **COMPLIANCE NOTE: THE BUILDING IS SPRINKLERED AND THE SLEEPING ROOMS IN ALL (12) APARTMENTS HAVE "ESCAPE WINDOWS".**

IBC 2018 CHAPTER 11, ACCESSIBILITY:

1102.1 ACCESSIBILITY DESIGN: BUILDINGS SHALL COMPLY WITH ICC A117.1 ACCESSIBLE FACILITIES CODE.

1103.1 WHERE REQUIRED: ALL NEW BUILDINGS SHALL BE ACCESSIBLE TO PERSONS WITH PHYSICAL DISABILITIES. **COMPLIANCE NOTE: ADA REQUIREMENTS ARE DESCRIBED IN THIS CHAPTER 11 SUMMARY AND AS SHOWN ON THE DRAWINGS.**

1103.2.9 EQUIPMENT SPACES: SPACES NOT REQUIRING ACCESSIBILITY INCLUDE MECHANICAL, ELECTRICAL AND EQUIPMENT SPACES: **COMPLIANCE NOTE: THE ONE MECHANICAL ROOM IS ONGRADE BUT IS NOT REQUIRED TO BE ACCESSIBLE.**

1104 ACCESSIBLE ROUTE: REQUIREMENTS TO CONNECT ADA PARKING SPACES TO FRONT ENTRANCE, AND TO THE PRIMARY USE. **COMPLIANCE NOTE: THE ACCESSIBLE ROUTE INCLUDES THE PARKING SPACES, SIDEWALK & PORCH, ENTRANCE, AND FIRST FLOOR CORRIDOR AREA WITH ACCESS TO ALL (4) APARTMENTS ON THE FIRST FLOOR.**

1105.1 PUBLIC ENTRANCES: AT LEAST 60% OF PUBLIC ENTRANCES SHALL BE ACCESSIBLE. **COMPLIANCE NOTE: BOTH PUBLIC ENTRANCES ON THE FIRST FLOOR ARE ACCESSIBLE.**

TABLE 1106.1 ACCESSIBLE PARKING SPACES: ZONING DETERMINES THE REQUIRED NUMBER OF PARKING SPACES; REFER TO LAND DEVELOP DRAWINGS. FOR 26 - 50 SPACES, (2) ADA SPACES ARE REQUIRED. **COMPLIANCE NOTE: (2) ADA PARKING SPACES ARE SHOWN ON THE CIVIL SITE PLAN.**

1107.6.2.2 GROUP R-2 ACCESSIBLE UNITS: TYPE A AND TYPE B UNITS SHALL BE REQUIRED IN APARTMENT HOUSES.

1107.6.2.2.1. TYPE A UNITS: IN GROUP R-2 CONTAINING MORE THAN 20 DWELLING UNITS, AT LEAST 2% BUT NOT LESS THAN ONE OF THE UNITS SHALL BE TYPE A. **COMPLIANCE NOTE: (1) TYPE A UNIT IS PROVIDED ON THE FIRST FLOOR - UNIT 101.**

1107.6.2.2.2 TYPE B UNITS: WHERE THERE ARE 4 OR MORE DWELLING UNITS OCCUPIED AS A RESIDENCE IN A SINGLE STRUCTURE, ALL UNITS SHALL BE AT LEAST TYPE B UNITS. **COMPLIANCE NOTE: (3) TYPE B UNITS ARE PROVIDED ON THE FIRST FLOOR.**

1107.7.1.1 ONE STORY WITH TYPE B UNITS IS REQUIRED: AT LEAST ONE ACCESSIBLE FLOOR LEVEL IS REQUIRED. **PROVIDED.**

1107.7.2 MULTISTORY BUILDING: WHERE NO ELEVATOR IS PROVIDED, THE UPPER FLOOR UNITS NEED NOT BE ACCESSIBLE, IF AT LEAST (1) STORY IS FULLY ACCESSIBLE TO MEET 1107.7.1.1.

COMPLIANCE NOTE: OF THE (12) TOTAL R-2 APARTMENTS, (1) ADA UNITS (2%) WILL BE THE TYPE A UNIT AND (3) FIRST FLOOR APARTMENTS WILL BE TYPE B UNITS AND SHALL COMPLY WITH THE SECTION 1107.7.1.1 ACCESSIBLE UNITS; THE (8) UNITS ON THE 2ND & 3RD FLOORS NEED NOT BE ACCESSIBLE; REFER TO ICC 117.1-2009 CHAPTER 10 FOR REQUIREMENTS FOR TYPE A & B DWELLING, FOR WHICH THE DRAWINGS SHOW COMPLIANCE.

TYPE A DWELLING UNITS, ICC A117.1 - 2009, CHAPTER 10, SECTION 1003:

RATHER THAN BE A UNIT THAT CAN BE "FULLY ADAPTED" TO BE ACCESSIBLE, THE INTENT OF THE (1) ADA UNIT ON THIS PROJECT IS TO GENERALLY COMPLY WITH ICC SECTION 1002 ACCESSIBLE DWELLING UNITS AND IS CONSTRUCTED TO BE WHEELCHAIR ACCESSIBLE WITH ALL GRAB BARS & REQUIREMENTS INSTALLED, AND THEREBY EXCEED THE TYPE A REQUIREMENTS. IT GENERALLY MEETS IBC CHAPTER 11 ACCESSIBILITY FOR PUBLIC ACCESSIBILITY, EXCEEDS ALL THE REQUIREMENTS LISTED BELOW FOR TYPE B DWELLING UNITS, HAS A SIDE WALL NEXT TO THE TOILET, AN ACCESSIBLE BATHTUB MEETING SECTION 607, PROVIDES FOR TURNING SPACE IN ALL ROOMS, MIRRORS AT 40" AFF, A FRONT APPROACH 34"H SINK AND A 30" WIDE WORK SURFACE, AND ACCESSIBLE APPLIANCES AND CONTROLS.

TYPE B DWELLING UNITS, ICC A117.1 - 2009, CHAPTER 10, SECTION 1004:

THE DRAWINGS SHOW ¼"SCALE UNIT PLANS & ELEVATIONS TO DOCUMENT COMPLIANCE.

1004.1 TYPE B UNITS ARE INTENDED TO MEET FAIR HOUSING ACCESSIBILITY GUIDELINES (FHAG).

1004.2 PRIMARY ENTRANCE: SHALL BE ON AN ACCESSIBLE ROUTE FROM PUBLIC OR COMMON AREAS.

1004.3 ACCESSIBLE ROUTE WITHIN UNIT: ONE ROUTE CONNECTS ALL SPACES, NO REQD. TURNING SPACE.

1004.4 WALKING SURFACE: CLEAR WIDTH SHALL BE 36" AND 32" AT FRAMED OPENINGS.

1004.5 DOORS: PRIMARY ENTRANCE DOOR SHALL MEET ACCESSIBLE ROUTE, ALSO DOORS FOR USER PASSAGE BUT NOT FOR REACH IN CLOSET DOORS, THRESHOLDS LIMITED TO ½" WITH A BEVELED EDGE.

1004.6 RAMPS: MUST MEET SECTION 405 RAMPS (ADA REQUIREMENTS). **N/A.**

1004.7 ELEVATORS: WHEN LOCATED WITHIN A UNIT; N/A.

1004.8 PLATFORM LIFTS: WHEN LOCATED WITHIN A UNIT; N/A.

1004.9 OPERABLE PARTS: ELECTRICAL SWITCHES AND CONTROLS SHALL MEET 309.2 (ADA REQUIREMENTS).

1004.10 LAUNDRY WASHER & DRYER EQUIPMENT: NOT REQUIRED WITHIN THE UNIT. WHEN PROVIDED WITHIN THE UNIT, ACCESSIBLE FLOOR SPACE IS REQUIRED. FIGURE C1004.10(C) SHOWS 30" X 48" WHEELCHAIR SPACE CENTERED ON THE APPLIANCE. **PROVIDED.**

1004.11 TOILET & BATHING FACILITIES.

1004.11.1 GRAB BAR REINFORCEMENT: PROVIDE BLOCKING IN WALLS FOR FUTURE INSTALLATION OF GRAB BARS AT THE BACK OF THE TOILET AND ON THE BACK & END WALL OF THE TUB.

EXCEPTION 3: AT WATER CLOSETS WHERE SPACE WILL NOT PERMIT A 36" REAR GRAB BAR, PROVIDE REINFORCING FOR A 24" REAR GRAB BAR.

EXCEPTION 5: AT WATER CLOSETS WITH NO SIDE WALL, PROVIDE REINFORCING FOR (1) SWING-UP GRAB BARS.

1004.11.1.1 SWING-UP GRAB BARS: PROVIDE 18" FROM TOILET CENTERLINE TO AN OBSTRUCTION; ONLY 15" ON NON-GRAB BAR SIDE OF THE TOILET, FIGURE C1004.11.1(B).

1004.11.2.1 DOORS: SHALL NOT SWING INTO THE CLEAR FLOOR SPACE REQUIRED FOR A FIXTURE EXCEPT WHERE A 30" X 48" CLEAR FLOOR SPACE (FIGURE 305.3 FOR WHEELCHAIR) IS PROVIDED IN THE ROOM BEYOND THE ARC OF THE DOOR SWING. **PROVIDED.**

1004.11.3.1 TOILET & BATHING AREA OPTION A; FIGURE C1004.11.3.1(A) FOR DWELLING TYPE B UNITS: CONFIGURATION HAS THE LAVATORY, WATER CLOSET, AND TUB ALONG ONE COMMON PLUMBING WALL. **THIS IS THE TYPICAL LAYOUT SHOWN ON THE DRAWINGS.**

1040.11.3.1.1 LAVATORY: PROVIDE A 30" X 48" PARALLEL SPACE CENTERED ON THE LAVATORY, WITH 24" FROM WALL TO CENTERLINE OF LAVATORY, CABINETRY IS PERMITTED, FIGURE 1004.11.3.1.1. **PROVIDED.**

1004.11.3.1.2,(1),(2) WATER CLOSET: NO ADJACENT WALL IS REQUIRED, TOILET CENTERLINE IS 16" TO 18" FROM SIDE OF A 48" WIDE X 56" DEEP SPACE FOR A SIDE APPROACH, WITH A LAVATORY CABINETRY OVERLAP ALLOWED. **PROVIDED.**

1004.11.3.1.2.2.4. CLEARANCE OVERLAP: A VANITY OBSTRUCTION 24" MAXIMUM IN DEPTH, MAY OVERLAP THE WATER CLOSET CLEARANCE PROVIDED THE REMAINING CLEARANCE AT THE WATER CLOSET IS 33" WIDTH, FIGURE 1004.11.3.1.2, DETAILS A, B, D. **PROVIDED.**

1004.11.3.1.3.2 FORWARD APPROACH BATHTUBS: FOR A STANDARD 60" TUB, PROVIDE 48" CLEAR FLOOR SPACE IN FRONT OF THE TUB WITH THE VANITY & LAVATORY PERMITTED IN THE CLEARANCE AT ONE END OF THE TUB, FIGURE C1004.11.3.1.3.2, 48" IS REQUIRED IN THE ROOM SEE 1004.11.2.1 DOORS. **PROVIDED.**

1004.12 KITCHENS & KITCHENETTES: THE INTENT IN TYPE B DWELLING UNITS IS THAT THE SPACE CAN BE USED BY A PERSON IN A WHEELCHAIR, WITH SOME LESSER ACCESS REQUIREMENTS AND TURNING SPACE THAN REQUIRED IN TYPE A UNITS.

1004.12.1.1 MINIMUM CLEARANCE: BETWEEN THE OPPOSING BASE CABINETS, COUNTERS, APPLIANCES OR WALLS PROVIDE 40" CLEARANCE. A GALLEY-STYLE KITCHEN WITH ALL EQUIPMENT ALONG ONE OR BOTH SIDES IS PERMITTED WITH ACCESS FROM ONE OR BOTH ENDS, FIGURE 1004.12.1.1. U-SHAPED KITCHENS REQUIRE 60" CLEARANCE. **PROVIDED.**

1004.12.2 CLEAR FLOOR SPACE: PROVIDE THE 30" X 48" WHEELCHAIR SPACE ADJACENT TO APPLIANCES, INCLUDING SINKS, DISHWASHER, COOKTOP STOVE, OVEN, REFRIGERATOR AND TRASH COMPACTOR. **PROVIDED.**

1004.12.2.1 SINK: PARALLEL APPROACH, FIGURE C1004.12.2.1.

1004.12.2.2 DISHWASHER: PARALLEL APPROACH, WITH DISHWASHER DOOR PROVIDING 9" TOE CLEARANCE WHEN OPEN, FIGURE C1004.12.2.2.

1004.12.2.3 COOKTOP (4) OVEN: PARALLEL APPROACH, FIGURE C1004.12.2.3.3, OVEN DOOR MUST ALLOW TOE CLEARANCE.

1004.12.2.5 REFRIGERATOR/FREEZER: SIDE APPROACH, FIGURE C1004.12.2.5.

1004.12.2.6 TRASH COMPACTOR: SIDE APPROACH SIMILAR TO A DISHWASHER. **N/A.**

IBC SECTION 1111 SIGNAGE

1111.1 SIGNS: REQUIRED ACCESSIBLE ELEMENTS SHALL BE IDENTIFIED BY THE INTERNATIONAL SYMBOL OF ACCESSIBILITY INCLUDING PARKING SPACES, ADA UNITS.

1111.2 DIRECTIONAL SIGNAGE: AT ALL EXITS & STAIRS.

COMPLIANCE NOTE: SIGNAGE MEETING ICC A117.1 IS REQUIRED AND PROVIDED THROUGHOUT THE BUILDING, INCLUDING APARTMENT ENTRANCE DOORS & EXIT DOORS.

IBC CHAPTER 12, INTERIOR ENVIRONMENT

1203.1 VENTILATION: UNITS SHALL HAVE NATURAL OR MECHANICAL VENTILATION. **COMPLIANCE NOTE: ALL UNITS HAVE OPERABLE WINDOWS AND MECHANICAL VENTILATION. SEE MECHANICAL DRAWINGS.**

REVISIONS / SUBMISSIONS

PERMIT DRAWINGS
10/7/22

JOHNSTON AND ASSOCIATES, INC.
CONSULTING ENGINEERS LAND DEVELOPMENT CONSULTANTS STRUCTURAL ENGINEERS
ERIC P. JOHNSTON, P.E.
2386 TAXVILLE ROAD YORK, PA 17408
office (717) 793-9595 fax (717) 793-9696

COMMONWEALTH OF PENNSYLVANIA
REGISTERED PROFESSIONAL
ERIC P. JOHNSTON
ENGINEER
NO. 038220 - R

10/10/2022

PREDIX PROPERTIES IV, LLC
Seth Predix, Developer
815 N. GEORGE ST. SUITE 'A', YORK, PA 17404
OFFICE: 717-781-4856

CODE NOTES
NEW APARTMENT BUILDING
91 S. THIRD ST., MOUNT WOLF, PA 17347
MOUNT WOLF BOROUGH, YORK COUNTY

DATE	.
SCALE	AS NOTED
DWN BY	JACK SANDS
DESIGN BY	PHIL FREY, AIA
SHEET	2 OF 15

A-2.1

BUILDING CODE NOTES - CONTINUED

1207.2 & 3 SOUND TRANSMISSION: WALLS, FLOORS, PARTITIONS SEPARATING DWELLING UNITS FROM EACH OTHER OR PUBLIC SPACES SHALL HAVE AN (STC) SOUND TRANSMISSION CLASS OF NOT LESS THAN 50 AND A (IIC) IMPACT ISOLATION CLASS OF NOT LESS THAN 50. **COMPLIANCE NOTE: THE NEW APARTMENT DEMISING & STAIR WALLS, AND APARTMENT FLOOR LOCATIONS, ARE DESIGNED TO ACHIEVE STC 50 AND IIC 50.**

1208.1 & 2 INTERIOR SPACE DIMENSIONS: HABITABLE SPACES SHALL BE 7'-0"W, AND ROOMS AND CORRIDORS SHALL HAVE 7'-6" HEIGHT. BATHROOMS, KITCHENS, LAUNDRIES SHALL BE 7'-0" H MINIMUM. **COMPLIES.**

1209.2 ATTIC ACCESS: AN OPENING OF NOT LESS THAN 20" X 30" WITH A CLEAR HEIGHT OF 30" SHALL BE PROVIDED TO ACCESS ATTICS. **COMPLIES; THERE IS AN EXISTING ACCESS STAIR TO THE ATTIC FROM THE 2ND FLOOR.**

IBC CHAPTER 13, ENERGY EFFICIENCY

1301.1.1 CRITERIA: BUILDINGS SHALL COMPLY WITH (IECC-2015) INT. ENERGY CONSERVATION CODE.

IECC, TABLE C301.1 CLIMATE ZONE: YORK COUNTY = 4A - MOIST, GROUP R RESIDENTIAL.

IECC TABLE C402.1.3 THERMAL ENVELOPE INSULATION, MINIMUM R VALUES:

ROOF INSULATION BELOW THE ROOF IN THE ATTIC REQUIRES MINIMUM R-38 CONTINUOUS INSULATION.

ROOF INSULATION ENTIRELY ABOVE DECK REQUIRES MINIMUM R-30CI CONTINUOUS INSULATION. **N/A.**

WOOD FRAME WALLS ABOVE GRADE REQUIRES R-20

METAL FRAMED WALLS ABOVE GRADE REQUIRES R-13 + R-7.5 CONTINUOUS INSULATION. **N/A.**

SLAB ON GRADE REQUIRES PERIMETER INSULATION R-10 FOR 24" HORIZONTAL & VERTICAL.

COMPLIANCE NOTE: SEE WALL SECTIONS. COMPLIES.

IECC TABLE C402.4 BUILDING ENVELOPE FENESTRATION, MAXIMUM U VALUES:.

ZONE 4A: FIXED WINDOW U-0.38; OPERABLE WINDOW U-0.45; ENTRANCE DOORS U-0.77

COMPLIANCE NOTE: ALL NEW DOORS, WINDOWS, ALUMINUM FRAMED ENTRANCES ARE SPECIFIED TO COMPLY.

IBC CHAPTER 14: EXTERIOR WALLS

1404.2 WATER-RESISTIVE BARRIER: PROVIDE A CONTINUOUS WATER-RESISTIVE BARRIER BEHIND THE EXTERIOR WALL VENEER, TYPICALLY THE ASPHALT FELT OR APPROVED MATERIAL WILL APPLY OVER THE SHEATHING OR SUBSTRATE; OR THE FACING OF THE EXTERIOR SHEATHING BOARD IS A WATER-RESISTIVE BARRIER.

1405.3 VAPOR RETARDERS: CLASS I OR II VAPOR RETARDERS ARE REQUIRED ON THE INTERIOR SIDE OF FRAME WALLS IN CLIMATE ZONE 4A WITH A RATING OF LESS THAN 1.0 PERM.

1405.4 FLASHING: REQUIRED TO PREVENT MOISTURE FROM ENTERING THE WALL OR TO REDIRECT IT TO THE EXTERIOR, INCLUDING AT ALL WINDOW & DOOR ASSEMBLIES, WALL TERMINATION ASSEMBLIES, ROOF INTERSECTIONS.

COMPLIANCE NOTE: THE NEW STUD WALL SECTIONS ARE SHOWN AND SPECIFIED WITH A WATER RESISTIVE BARRIER (WHICH ALSO IS SPECIFIED AS AN AIR BARRIER), VAPOR RETARDER, AND FLASHING.

IBC CHAPTER 15, ROOF ASSEMBLIES & ROOFTOP STRUCTURES

TABLE 1505.1 MINIMUM ROOF COVERING CLASSIFICATIONS FOR TYPES OF CONSTRUCTION: TYPE #5B REQUIRES A CLASS C ROOF ASSEMBLY.

1505.4 CLASS C ROOF ASSEMBLIES: THE SYSTEM IS CLASSIFIED BY AN APPROVED TESTING AGENCY.

COMPLIANCE NOTE: A COMPLETE NEW SHINGLE ROOF SYSTEM WITH POSITIVE DRAINAGE SLOPE, COMPLIES.

IBC CHAPTER 16, STRUCTURAL: DESIGN PROFESSIONAL SHALL SEAL THE CONSTRUCTION DOCUMENTS.

TABLE 1607.1 MINIMUM UNIFORMLY DISTRIBUTED LIVE LOADS:

RESIDENTIAL APARTMENTS AREAS = 40 PSF; STAIRS = 100 PSF.

COMPLIANCE NOTE: COMPLIES. SEE STRUCTURAL DRAWINGS.

IBC CHAPTER 27 ELECTRICAL: COMPLY WITH NEC.

IBC CHAPTER 28 MECHANICAL: COMPLY WITH IMC.

IBC CHAPTER 29 PLUMBING: COMPLY WITH IPC.

TABLE 2902.1 MINIMUM NUMBER OF REQUIRED PLUMBING FIXTURES: FOR GROUP R-2 APARTMENT HOUSE FOR EACH DWELLING UNIT: 1 WATER CLOSET, 1 LAVATORY, 1 TUB OR SHOWER, 1 KITCHEN SINK, AND 1 AUTOMATIC CLOTHES WASHING MACHINE FOR EACH 20 UNITS. **COMPLIANCE: PLUMBING FIXTURES AS SHOWN COMPLY, WITH INDIVIDUAL WASHER & DRYER HOOKUPS SHOWN IN EACH APARTMENT UNIT**

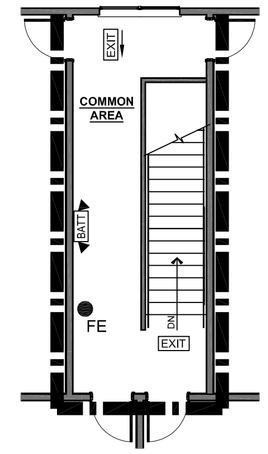

3rd FLOOR PLAN

0 1' 4' 8' 16' 32'

1/8"=1'-0"

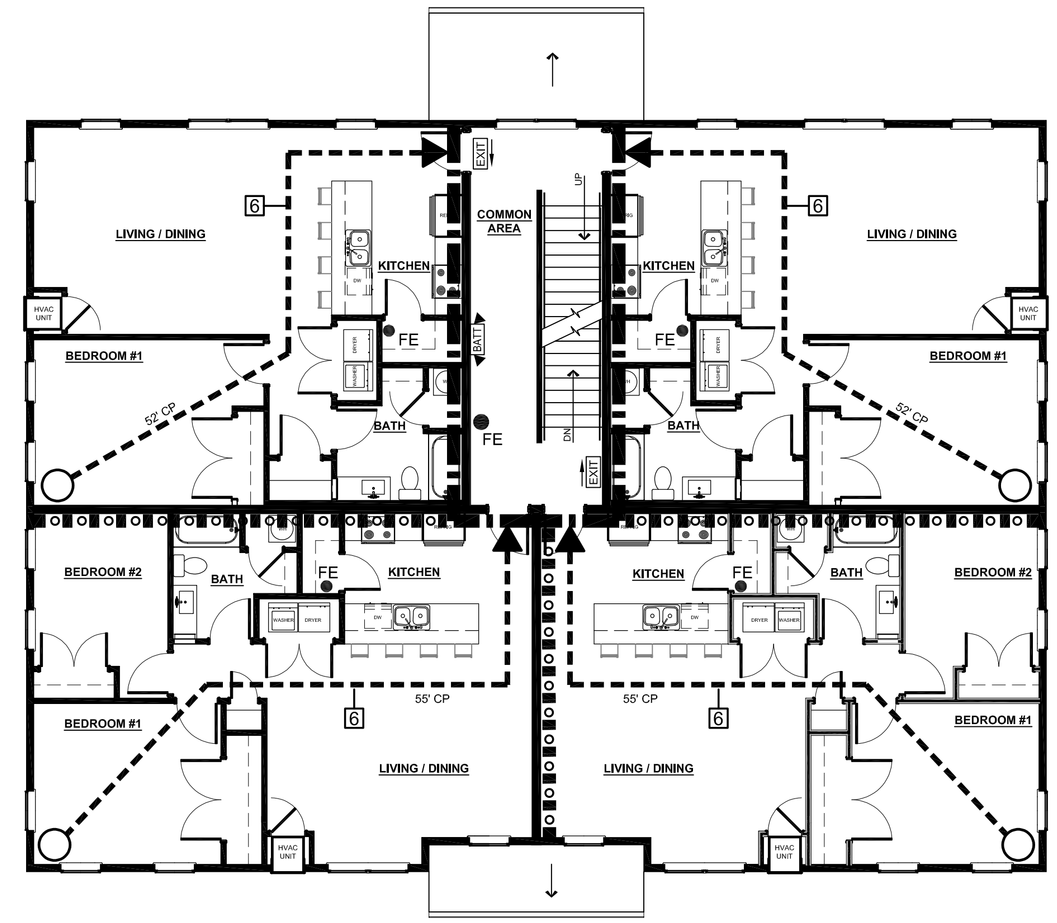

2nd & 3rd FLOOR PLAN

0 1' 4' 8' 16' 32'

1/8"=1'-0"

LIFE SAFETY LEGEND

	NEW WALL & DOOR SYMBOLS
	EXIT DOOR WITH PANIC HARDWARE, IBC1010.1.10; TACTILE EXIT SIGN, ADA, IBC 1013.4; AND LIGHTED EXIT SIGN, IBC 1008
6	OCCUPANCY, IBC TABLE 1004.1.2
	FIRE BARRIER SEPARATING A VERTICAL SHAFT, 1 HOUR RATED, IEBC 1012.7, IBC 703.3.3. DOORS ARE 1 HOUR RATED - IEBC 1012.7.4.
40'	EXIT TRAVEL DISTANCE, 250' MAX WITH SPRINKLERS, IBC TABLE 1017.2
32' CP	COMMON PATH EGRESS TRAVEL ACTUAL ≤ 125' ALLOWED WITH SPRINKLERS AND APARTMENT UNIT ALLOWED (1) EXIT. IBC TABLE 1006.2.1
EXIT / EXIT	LIGHTED EXIT SIGN, DIRECTIONAL ARROW, EMERGENCY LIGHTING & BATTERY PACK, IBC 1013.5
FE	FIRE EXTINGUISHER, IBC 906.3(1)
	EMERGENCY LIGHTING REMOTE HEADS
	BATTERY PACK, IBC 1008
	FIRE PARTITION DEMISING WALL, 1 HR RATED, IBC 708.3

NOTE: EMERGENCY LIGHTING & LIGHTED EXIT SIGNS ARE ALSO SHOWN ON THE ELECTRICAL DRAWINGS, IBC 1008.

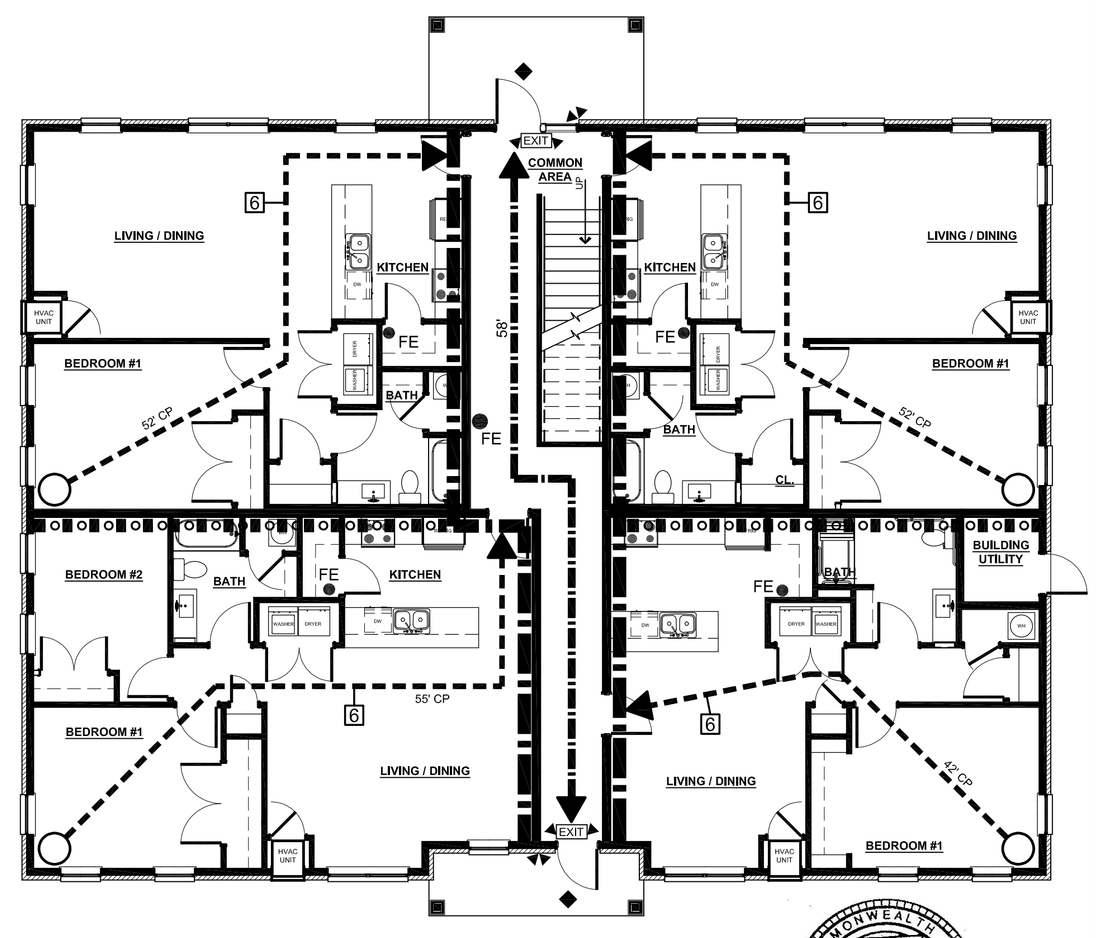

FIRST FLOOR PLAN

0 1' 4' 8' 16' 32'

1/8"=1'-0"

COMMONWEALTH OF PENNSYLVANIA REGISTERED PROFESSIONAL ENGINEER ERIC P. JOHNSTON NO. 038220 - R

10/10/2022

REVISIONS / SUBMISSIONS

PERMIT DRAWINGS 10/7/22

JOHNSTON AND ASSOCIATES, INC
CONSULTING ENGINEERS LAND DEVELOPMENT CONSULTANTS STRUCTURAL ENGINEERS
ERIC P. JOHNSTON, P.E.
2386 TAXVILLE ROAD YORK, PA 17408
office (717) 793-9595 fax (717) 793-9696

PREDIX PROPERTIES IV, LLC
Seth Predix, Developer
815 N. GEORGE ST. SUITE 'A', YORK, PA 17404
OFFICE: 717-781-4856

CODE NOTES & LIFE SAFETY PLAN

NEW APARTMENT BUILDING
91 S. THIRD ST., MOUNT WOLF, PA 17347
MOUNT WOLF BOROUGH, YORK COUNTY

DATE .
SCALE AS NOTED
DWN BY JACK SANDS
DESIGN BY PHIL FREY, AIA
SHEET 3 OF 15
A-2.2

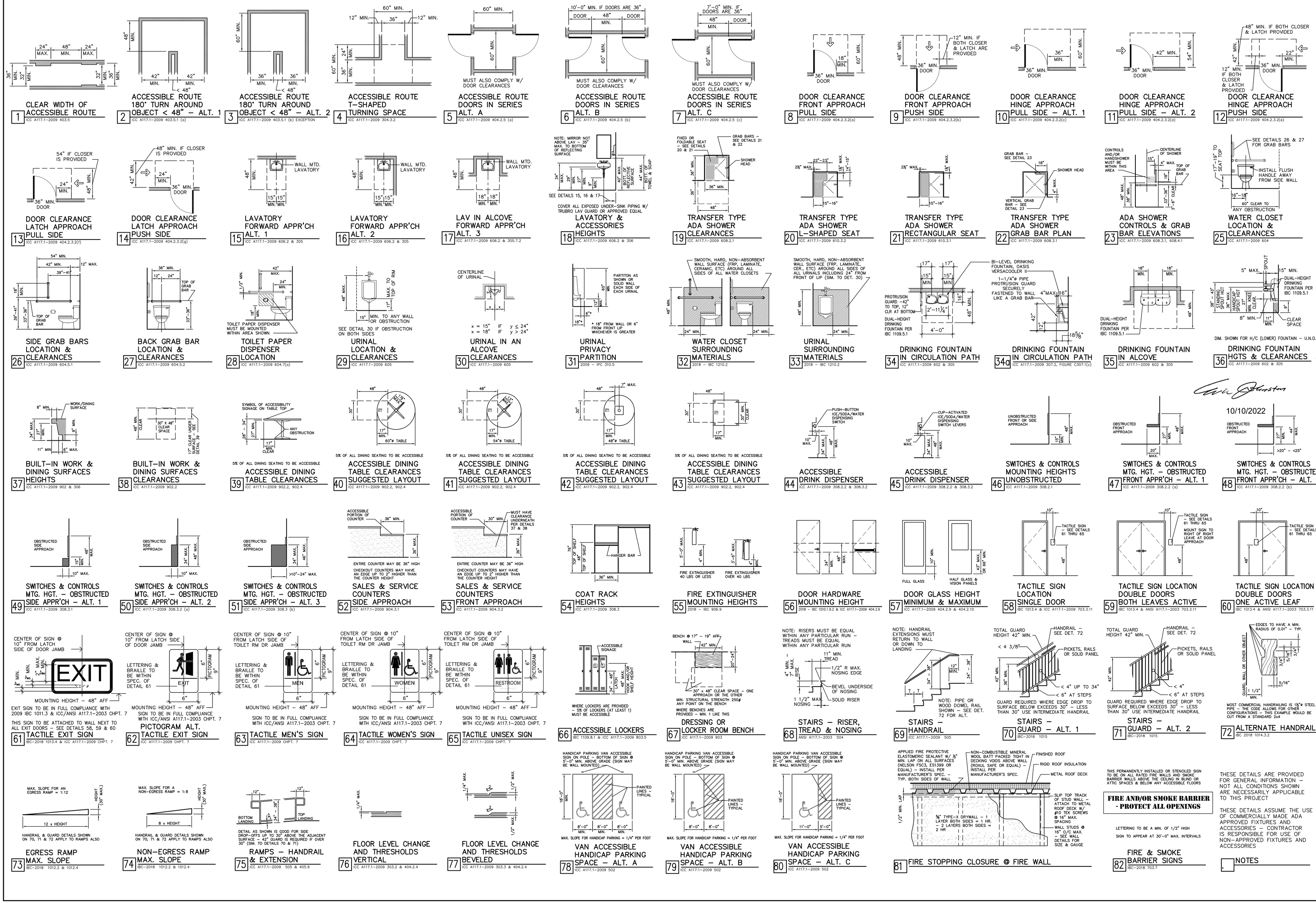

THESE DETAILS ARE PROVIDED FOR GENERAL INFORMATION – NOT ALL CONDITIONS SHOWN ARE NECESSARILY APPLICABLE TO THIS PROJECT

THESE DETAILS ASSUME THE USE OF COMMERCIALLY MADE ADA APPROVED FIXTURES AND ACCESSORIES – CONTRACTOR IS RESPONSIBLE FOR USE OF NON–APPROVED FIXTURES AND ACCESSORIES

NOTES

REVISIONS / SUBMISSIONS

PERMIT DRAWINGS 10/7/22

JOHNSTON AND ASSOCIATES, INC
CONSULTING ENGINEERS LAND DEVELOPMENT CONSULTANTS STRUCTURAL ENGINEERS
ERIC P. JOHNSTON, P.E.
2386 TAXVILLE ROAD YORK, PA 17408
office (717) 793-9595 fax (717) 793-9696

COMMONWEALTH OF PENNSYLVANIA REGISTERED PROFESSIONAL ENGINEER ERIC P. JOHNSTON NO. 058220-R

10/10/2022

PREDIX PROPERTIES IV, LLC
Seth Predix, Developer
815 N. GEORGE ST. SUITE 'A' YORK, PA 17404
OFFICE: 717-781-4856

ADA STANDARD DETAILS
NEW APARTMENT BUILDING
91 S. THIRD ST., MOUNT WOLF, PA 17347
MOUNT WOLF BOROUGH, YORK COUNTY

DATE .
SCALE AS NOTED
DWN BY JACK SANDS
DESIGN BY PHIL FREY, AIA
SHEET 4 OF 15
A-3

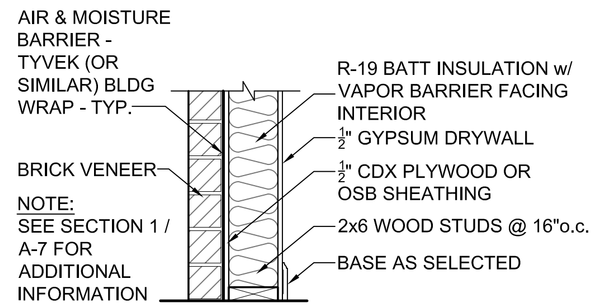

1 EXTERIOR WALL

RATING: 0 HR
STC: N/A

PARTITION TYPE 1
SCALE: 1"=1'-0"

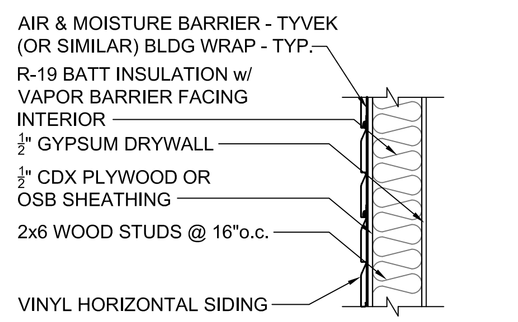

2 EXTERIOR WALL

RATING: 0 HR
STC: N/A

PARTITION TYPE 2
SCALE: 1"=1'-0"

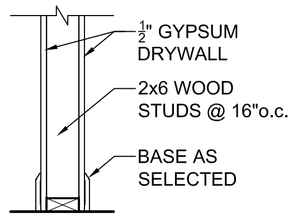

3 TYPICAL INTERIOR APARTMENT PARTITION

PARTITION TYPE 3
SCALE: 1"=1'-0"

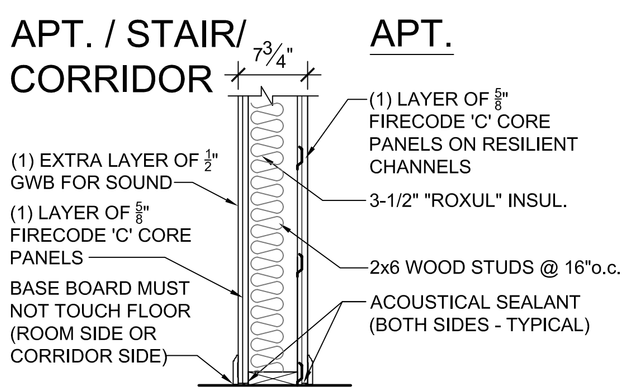

4 DEMISING WALLS

RATING: 1 HR, UL DES. 327
STC: 50+

5 DEMISING WALL WITH WET WALL

PROVIDE AN ADJACENT 3-1/2" WD STUD WALL w/ ½" MRGWB FOR PLUMBING

PARTITION TYPE 4 5
SCALE: 1"=1'-0"

PARTITION TYPES

0 6" 1' 2' 3' 4'
1"=1'-0"

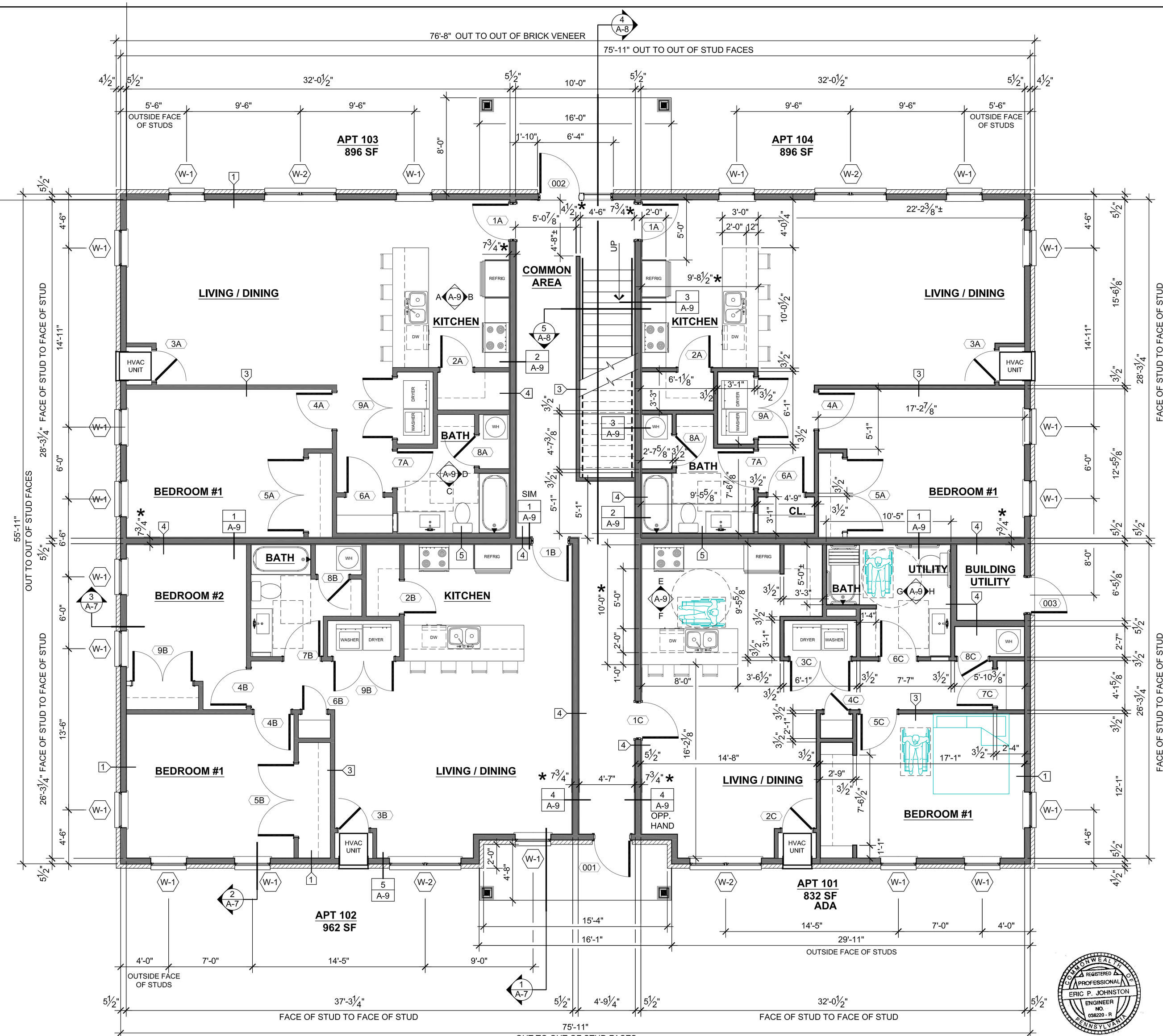

FIRST FLOOR PLAN

0 1' 4' 8' 16' 20'
1/4"=1'-0"

NORTH

ALL DIMENSIONS ARE FACE OF STUD TO FACE OF STUD FACE UNLESS OTHERWISE NOTED

DIMENSIONS MARKED WITH AN * ARE FACE OF GYPSUM BD. TO FACE OF GYPSUM BD.

COMMONWEALTH OF PENNSYLVANIA REGISTERED PROFESSIONAL ENGINEER ERIC P. JOHNSTON NO. 036200 - R

10/10/2022

REVISIONS / SUBMISSIONS

PERMIT DRAWINGS
10/7/22

JOHNSTON AND ASSOCIATES, INC.
CONSULTING ENGINEERS • LAND DEVELOPMENT • MECHANICAL • ELECTRICAL • PLUMBING
ERIC P. JOHNSTON, P.E.
2386 TAXVILLE ROAD YORK, PA 17408
office (717) 793-9595 fax (717) 793-9696

PREDIX PROPERTIES IV, LLC
Seth Predix, Developer
815 N. GEORGE ST. SUITE A', YORK, PA 17404
OFFICE: 717-781-4856

FIRST FLOOR PLAN & PARTITION TYPES

NEW APARTMENT BUILDING
91 S. THIRD ST., MOUNT WOLF, PA 17347
MOUNT WOLF BOROUGH, YORK COUNTY

DATE .
SCALE AS NOTED
DWN BY JACK SANDS
DESIGN BY PHIL FREY, AIA
SHEET 5 OF 15
A-4

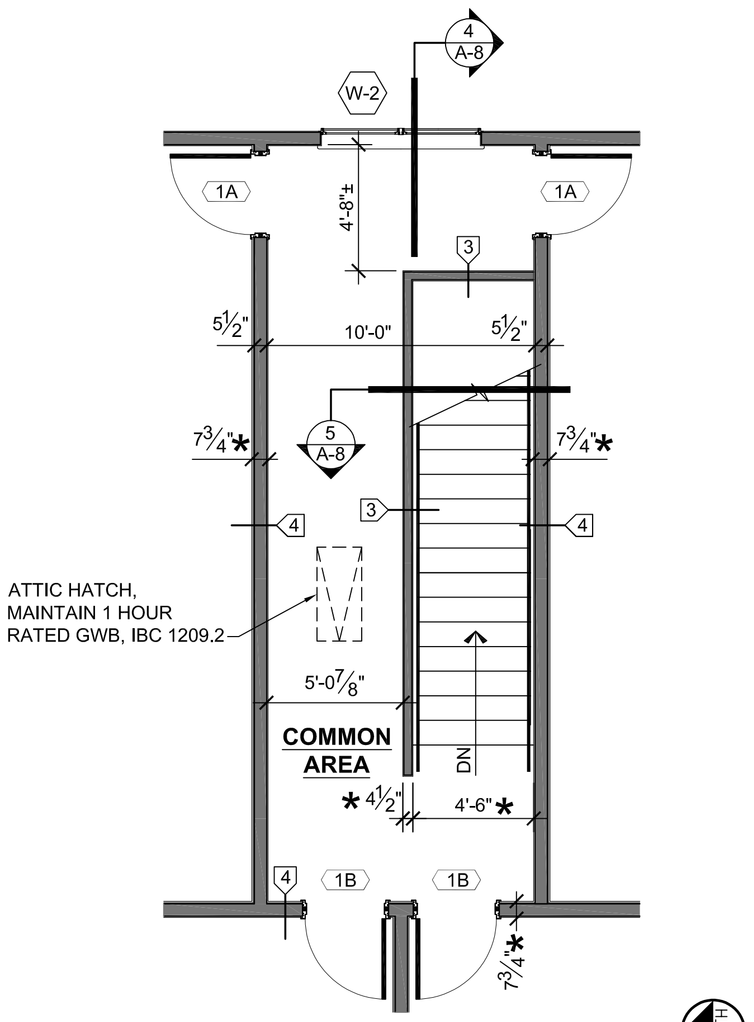

3rd FLOOR PLAN

0 1' 4' 8' 16' 20'

1/4"=1'-0"

NOTES:

1. ALL ROOF SLOPES ARE 5 IN 12 UNLESS NOTED OTHERWISE.
2. TYPICAL ROOF OVERHANG IS 2'-0" UNLESS NOTED OTHERWISE.
3. ALL VALLEYS SHALL BE WOVEN ROOF SHINGLES.
4. ARROWS ON ROOF PLAN INDICATE SLOPE IN DOWNWARD DIRECTION.
5. PROVIDE CONTINUOUS RIDGE VENT WHERE INDICATED.
6. PROVIDE PERIMETER ICE BARRIER IN ACCORD WITH BUILDING CODES.
7. PROVIDE CONTINUOUS PREFINISHED ALUMINUM GUTTER AND DOWNSPOUT SYSTEM AT ALL AREAS OF FASCIA (PARALLEL) TO FINISH FLOOR.

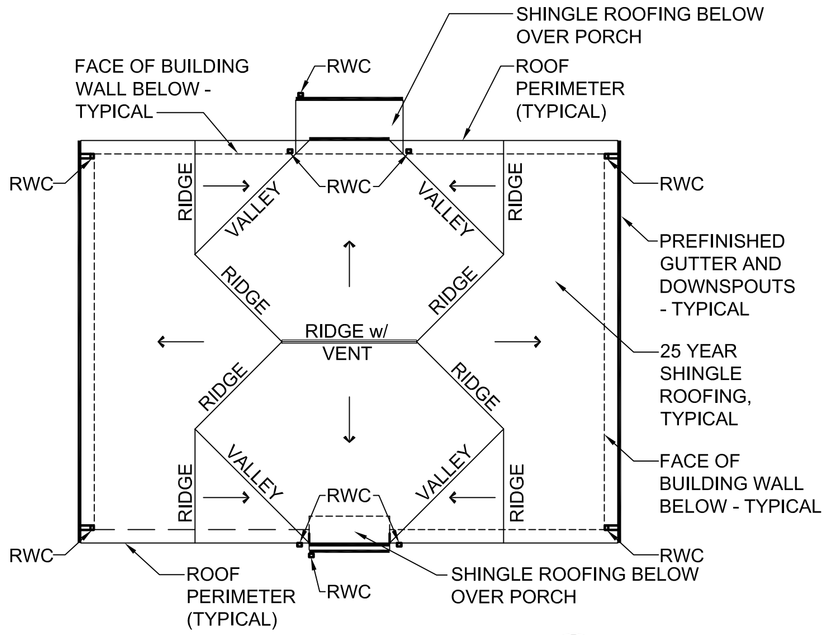

ROOF PLAN

0 2' 8' 16' 32' 64'

1/16"=1'-0"

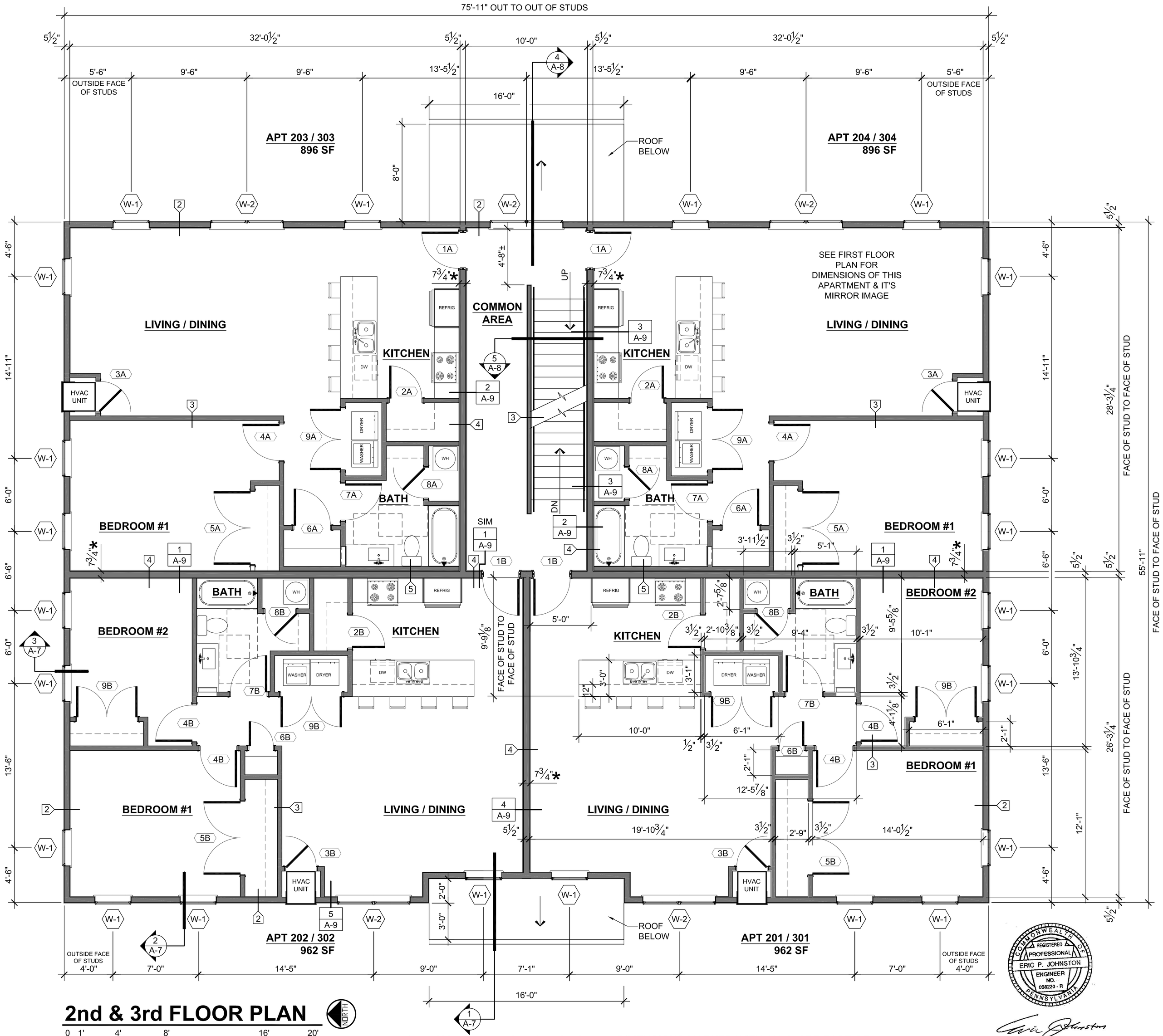

2nd & 3rd FLOOR PLAN

0 1' 4' 8' 16' 20'

1/4"=1'-0"

ALL DIMENSIONS ARE FACE TO FACE OF STUDS UNLESS OTHERWISE NOTED

DIMENSIONS MARKED WITH AN * ARE FACE OF GYPSUM BD. TO FACE OF GYPSUM BD.

COMMONWEALTH OF PENNSYLVANIA REGISTERED PROFESSIONAL ENGINEER ERIC P. JOHNSTON NO. 058220 - R

10/10/2022

REVISIONS / SUBMISSIONS	
	PERMIT DRAWINGS 10/7/22

JOHNSTON AND ASSOCIATES, INC.
CONSULTING ENGINEERS LAND DEVELOPMENT CONSULTANTS STRUCTURAL ENGINEERS
ERIC P. JOHNSTON, P.E.
2386 TAXVILLE ROAD YORK, PA 17408
office (717) 793-9595 fax (717) 793-9696

PREDIX PROPERTIES IV, LLC
Seth Predix, Developer
815 N. GEORGE ST. SUITE 'A', YORK, PA 17404
OFFICE: 717-781-4856

2nd & 3rd FLOOR & ROOF PLAN

NEW APARTMENT BUILDING
91 S. THIRD ST., MOUNT WOLF, PA 17347
MOUNT WOLF BOROUGH, YORK COUNTY

DATE .
SCALE AS NOTED
DWN BY JACK SANDS
DESIGN BY PHIL FREY, AIA
SHEET 6 OF 15
A-5

NORTH ELEVATION

0 1' 2' 4' 8' 16'

3/16"=1'-0"

EAST ELEVATION

0 1' 2' 4' 8' 16'

3/16"=1'-0"

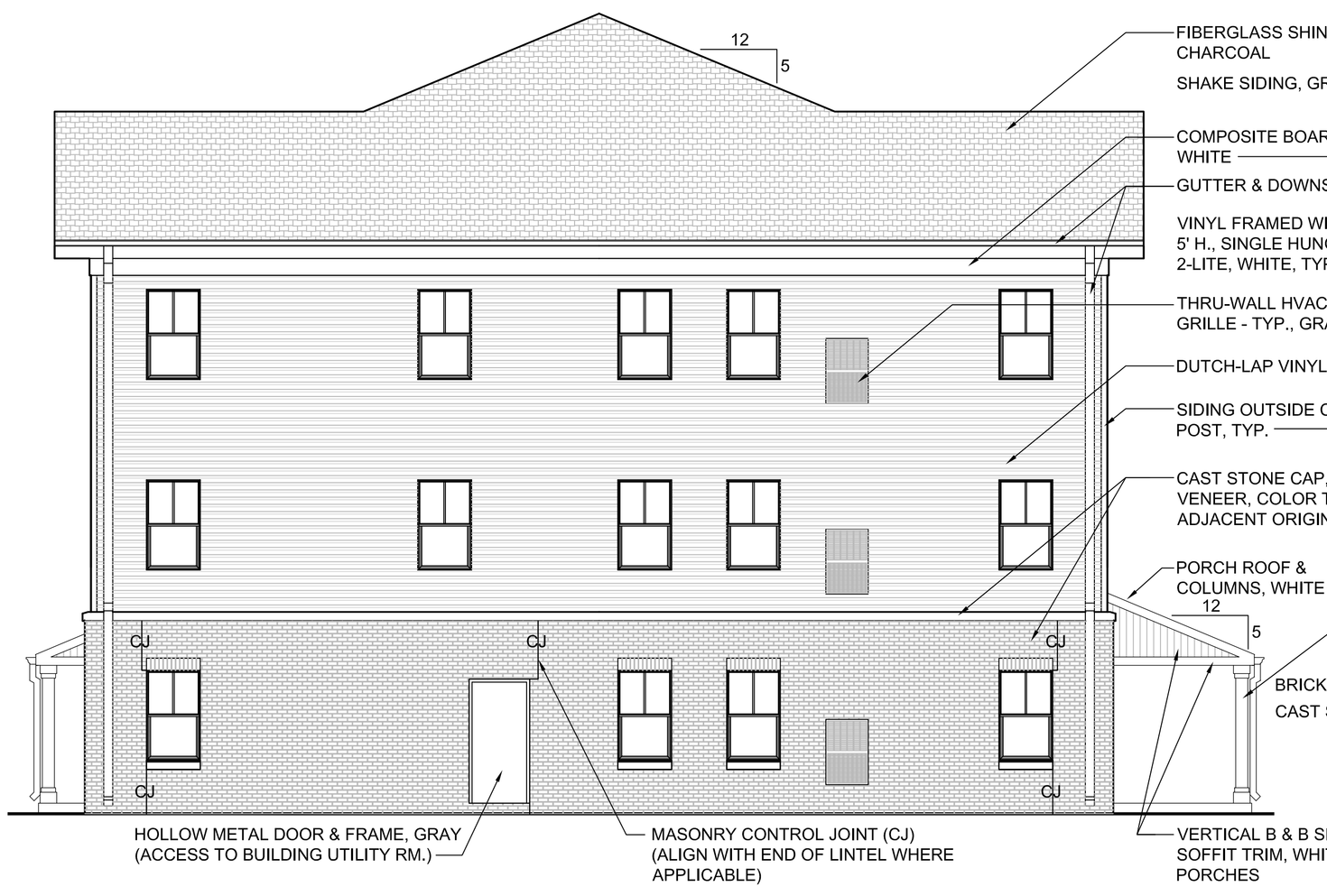

SOUTH ELEVATION

0 1' 2' 4' 8' 16'

3/16"=1'-0"

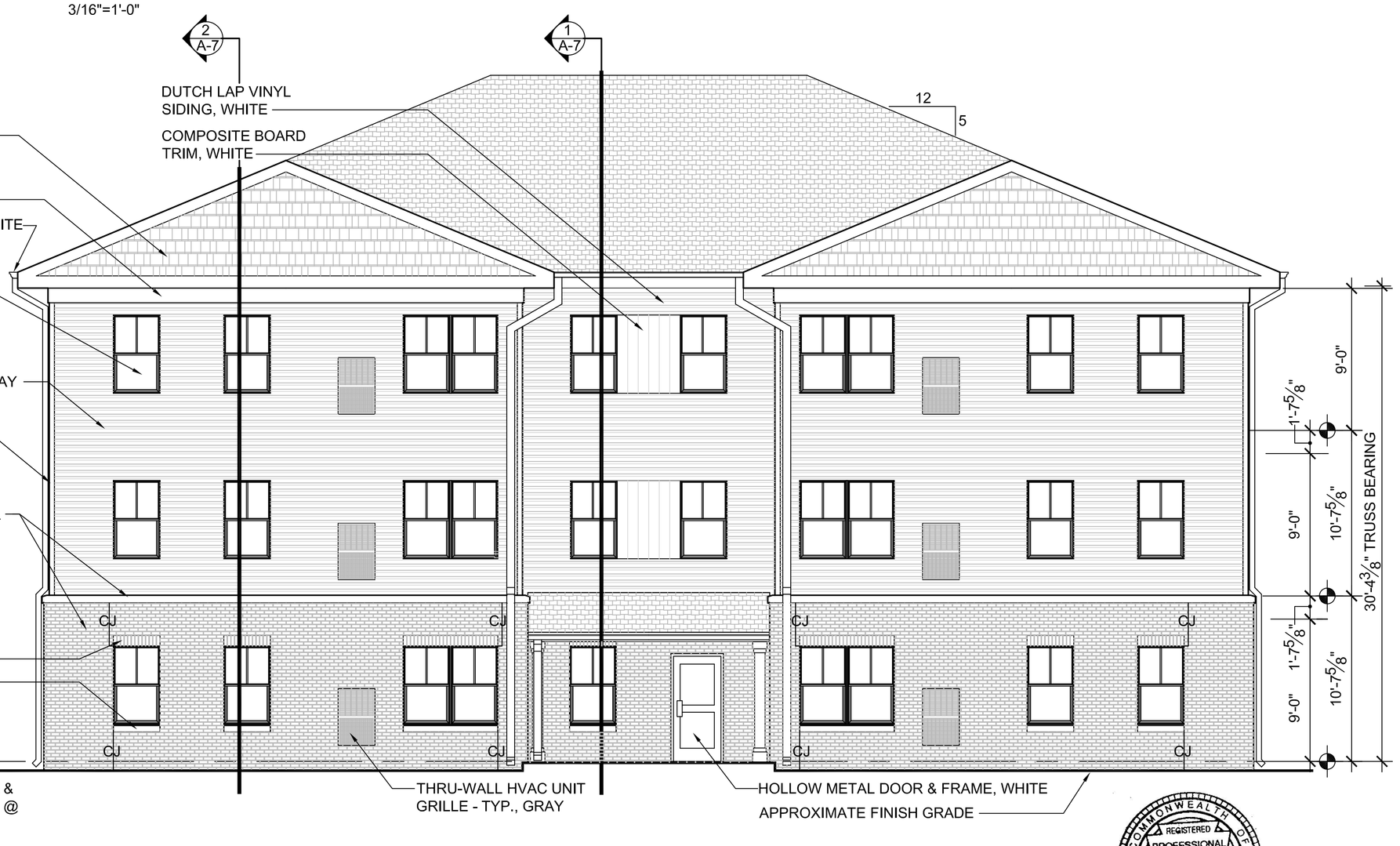

WEST ELEVATION

0 1' 2' 4' 8' 16'

3/16"=1'-0"

Eric P. Johnston

10/10/2022

COMMONWEALTH OF PENNSYLVANIA
REGISTERED PROFESSIONAL ENGINEER
ERIC P. JOHNSTON
NO. 056220 - R

REVISIONS / SUBMISSIONS

PERMIT DRAWINGS
10/7/22

JOHNSTON AND ASSOCIATES, INC.
CONSULTING ENGINEERS LAND DEVELOPMENT CONSULTANTS STRUCTURAL ENGINEERS
ERIC P. JOHNSTON, P.E.
2386 TAXVILLE ROAD YORK, PA 17406
office (717) 793-9595 fax (717) 793-9696

PREDIX PROPERTIES IV, LLC
Seth Predix, Developer
815 N. GEORGE ST. SUITE 'A', YORK, PA 17404
OFFICE: 717-781-4856

EXTERIOR ELEVATIONS

NEW APARTMENT BUILDING

91 S. THIRD ST., MOUNT WOLF, PA 17347
MOUNT WOLF BOROUGH, YORK COUNTY

DATE

SCALE
AS NOTED

DWN BY
JACK SANDS

DESIGN BY
PHIL FREY, AIA

SHEET 7 OF 15

A-6

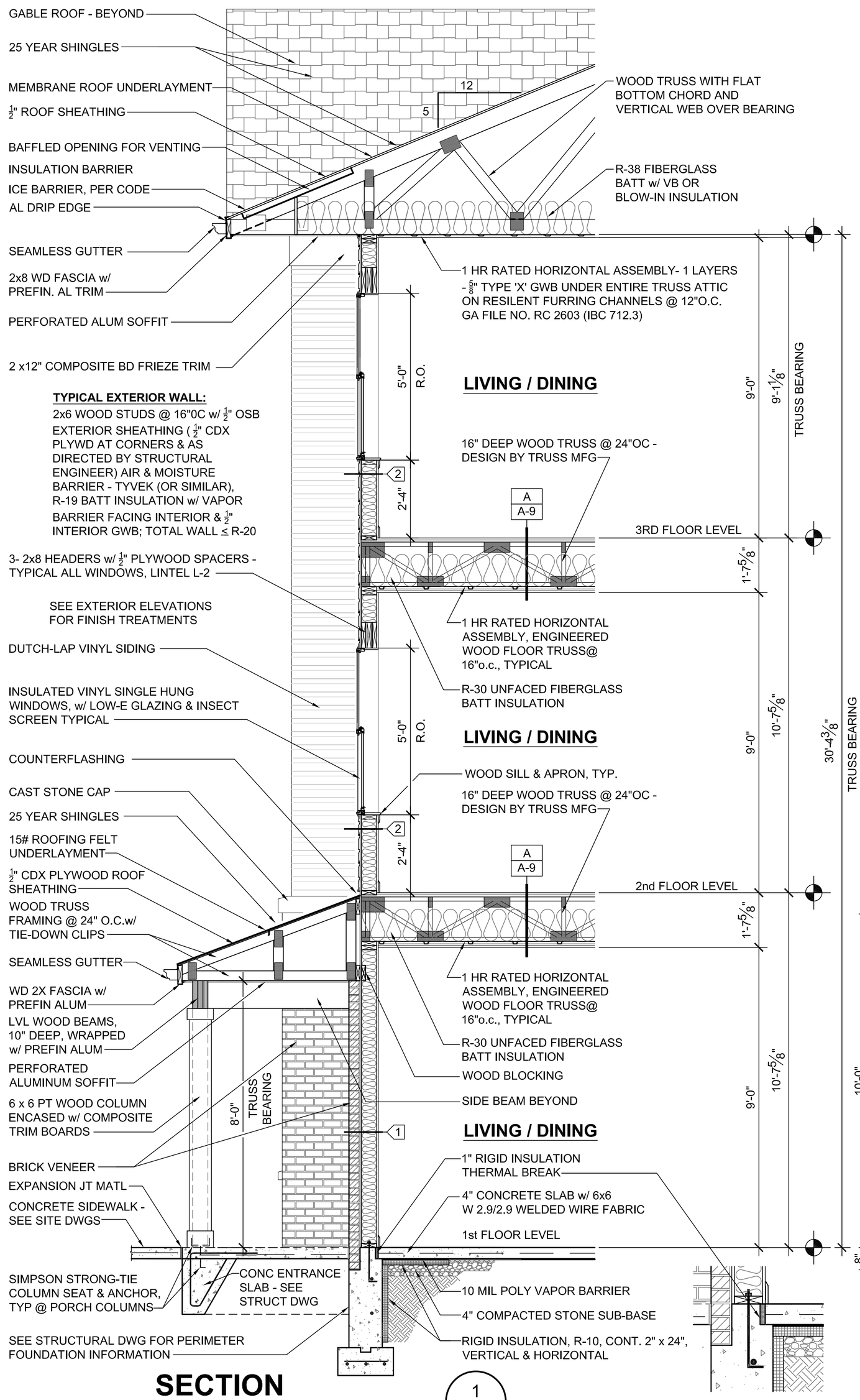

SECTION 1/A-4 A-5

1/2" = 1'-0"

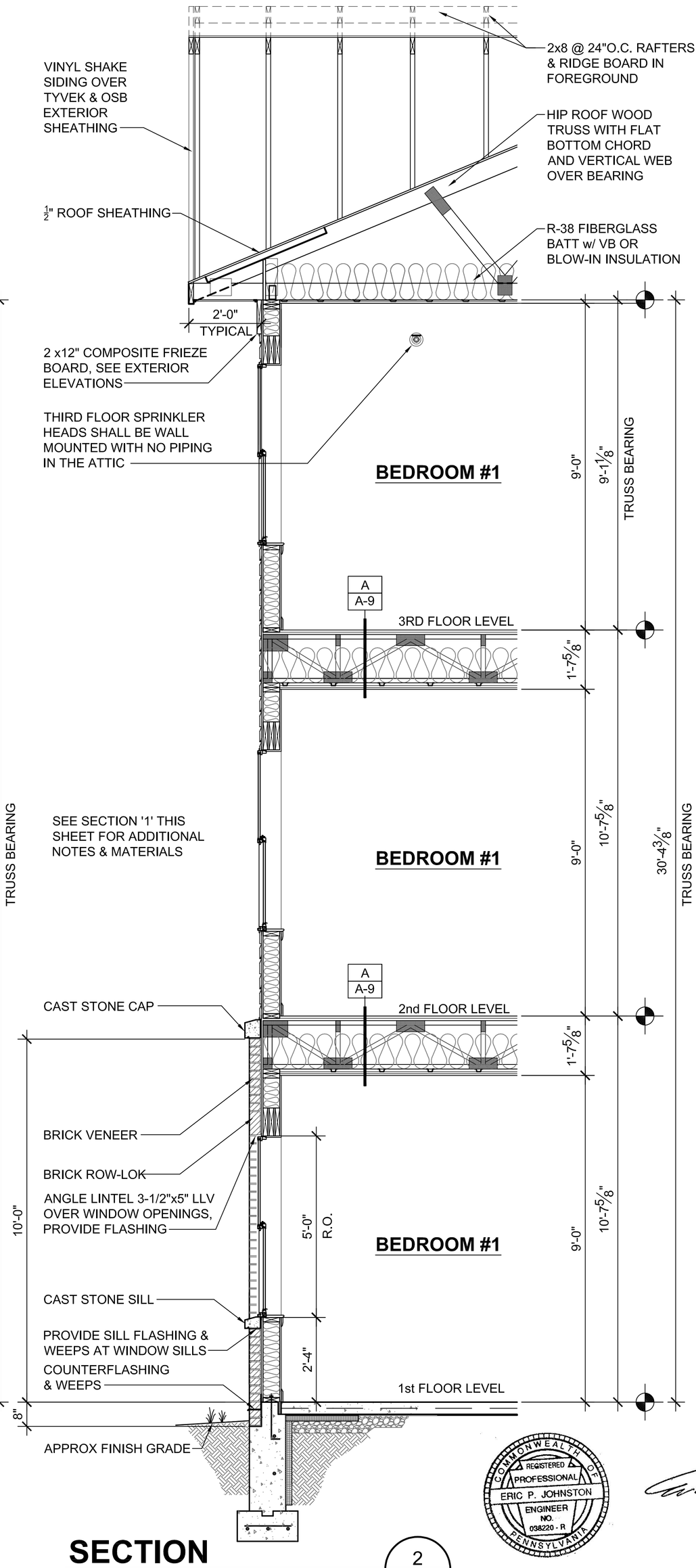

SECTION 2/A-4 A-5

1/2" = 1'-0"

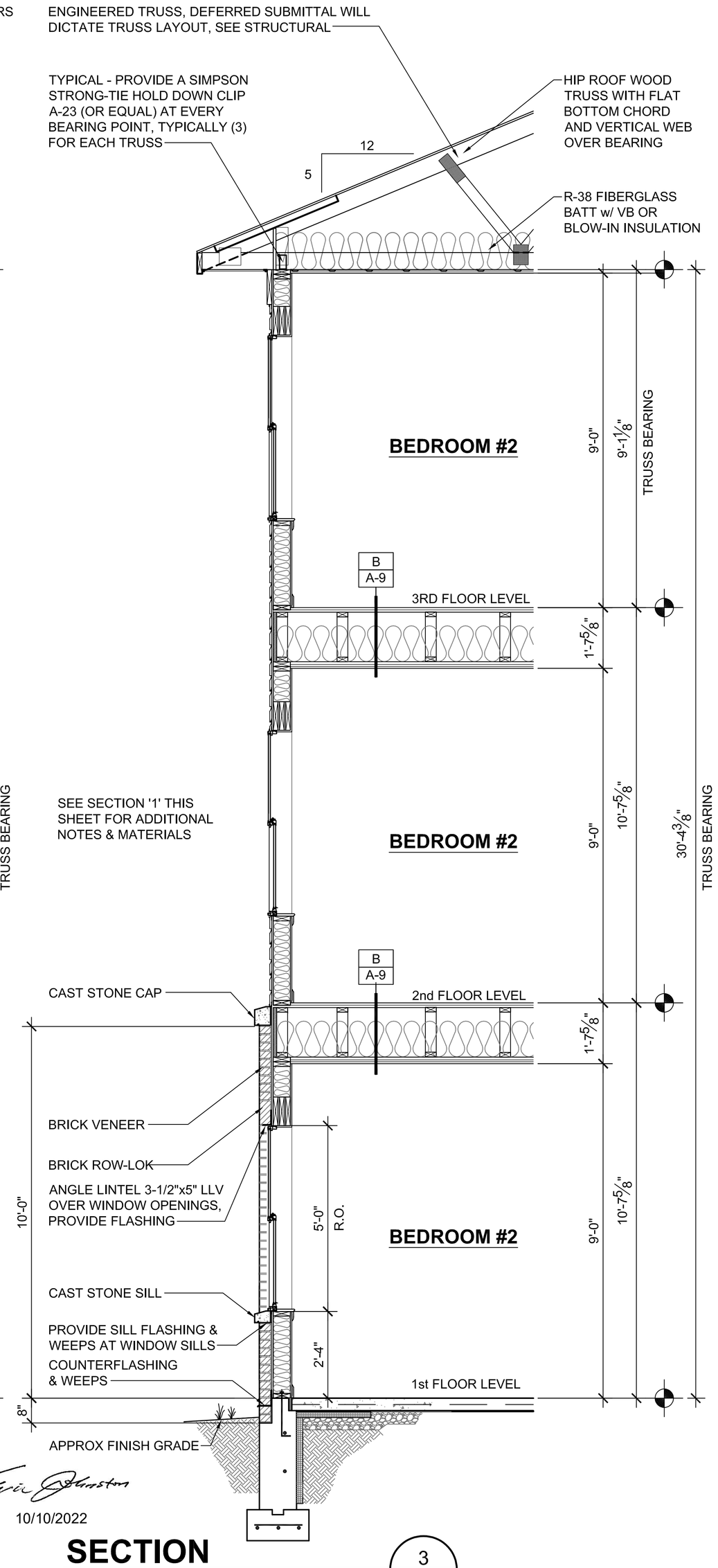

SECTION 3/A-4 A-5

1/2" = 1'-0"

COMMONWEALTH OF PENNSYLVANIA
REGISTERED PROFESSIONAL
ERIC P. JOHNSTON
ENGINEER NO. 038220 - R

10/10/2022

REVISIONS / SUBMISSIONS	PERMIT DRAWINGS 10/7/22

JOHNSTON AND ASSOCIATES, INC.
CONSULTING ENGINEERS LAND DEVELOPMENT CONSULTANTS STRUCTURAL ENGINEERS
ERIC P. JOHNSTON, P.E.
2386 TAXVILLE ROAD YORK, PA 17406
office (717) 793-9595 fax (717) 793-9606

PREDIX PROPERTIES IV, LLC
Seth Predix, Developer
815 N. GEORGE ST. SUITE 'A', YORK, PA 17404
OFFICE: 717-781-4856

WALL SECTIONS - SHEET 1
NEW APARTMENT BUILDING
91 S. THIRD ST., MOUNT WOLF, PA 17347
MOUNT WOLF BOROUGH, YORK COUNTY

DATE .
SCALE AS NOTED
DWN BY JACK SANDS
DESIGN BY PHIL FREY, AIA
SHEET 8 OF 15
A-7

1 WOOD STAIR WALL IS 1 HR RATED SHAFT WITH WOOD & GWB PARTITION TO RUN CONTINUOUS FROM SLAB TO ROOF TRUSS. WOOD STAIR CONSTRUCTION IS FRAMED WITHIN SHAFT AND SHALL MEET IBC FLOOR LOAD 100 PSF.

2 PROVIDE WOOD RAILING SYSTEM MEETING IBC CODE & 200 LB POINT LOAD. WOOD OR METAL RAIL SYSTEM WILL BE CONNECTED TO SOLID WOOD BLOCKING / STUDS.

3 FRAME STAIR LANDINGS WITH 2x12 @12"O.C.,TYP.,(3) HEADERS AT STAIR RUN SUPPORTS w/ 5-1/2" BEARING, LANDING JOIST HANGERS ATTACH TO RIM JOIST WHICH IS (2) SCREW ANCHORED AT EVERY SHAFT STUD

4 FRAME LANDING FLOOR WHERE NOTED w/ 2x10 @ 12"O.C. TYP., JOIST HANGERS ATTACH TO HEADER JOIST WHICH IS (2) SCREW ATTACHED AT EVERY SHAFT STUD

5 $\frac{1}{2}$" GWB UNDER ALL RUNS & LANDINGS

6 (3)GANGED 2x6 STUDS AT LANDING BEAM BEARING, RUN CONTINUOUS TO THICKENED SLAB FOOTING

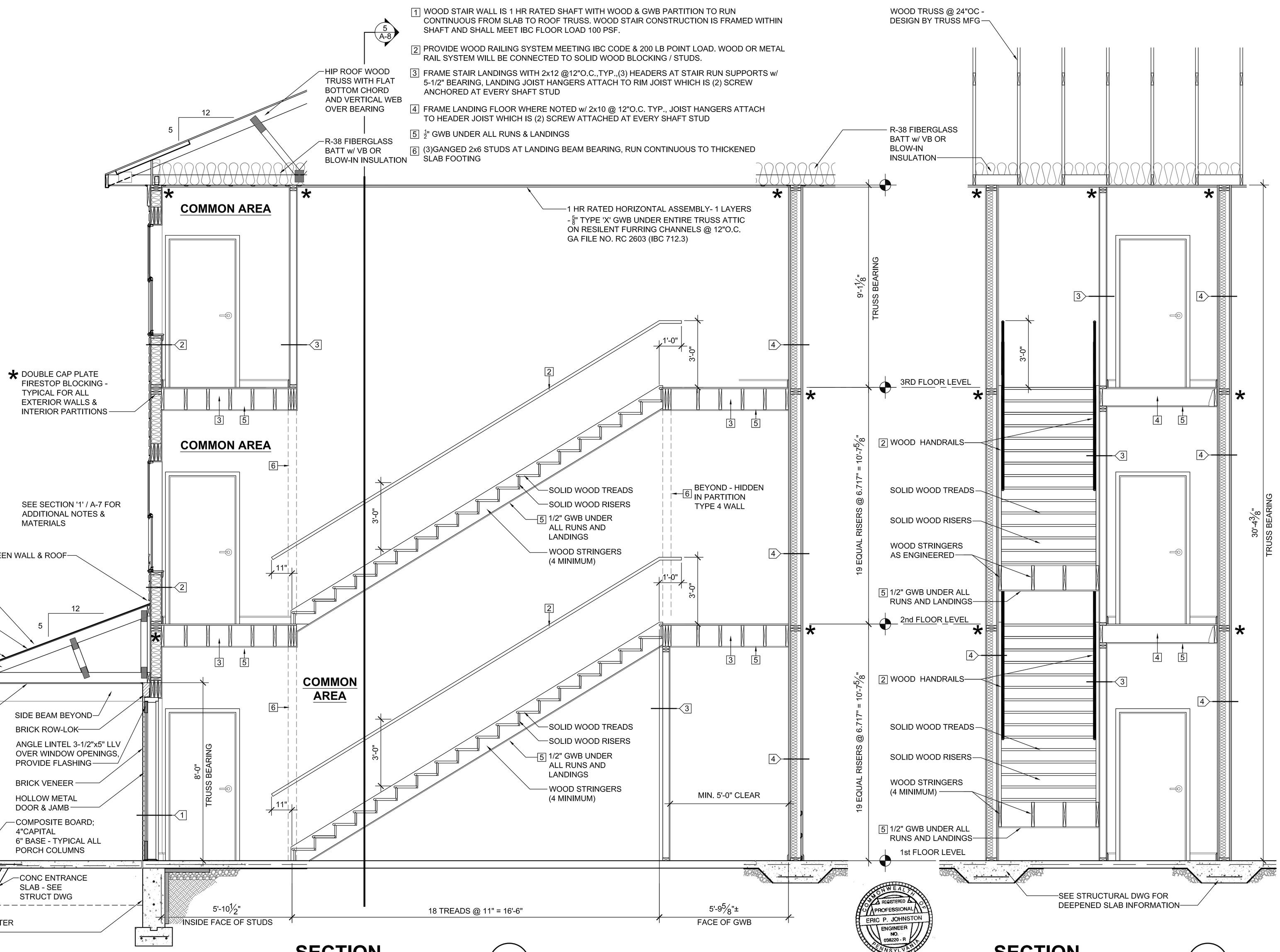

SECTION 4 / A-4 — A-5

0 1' 4' 8'
1/2" = 1'-0"

COMMONWEALTH OF PENNSYLVANIA REGISTERED PROFESSIONAL ENGINEER ERIC P. JOHNSTON NO. 038220 - R

10/10/2022`

SECTION 5 / A-4 — A-5

0 1' 4' 8'
1/2" = 1'-0"

REVISIONS / SUBMISSIONS

PERMIT DRAWINGS 10/7/22

JOHNSTON AND ASSOCIATES, INC
CONSULTING ENGINEERS LAND DEVELOPMENT CONSULTANTS STRUCTURAL ENGINEERS
ERIC P. JOHNSTON, P.E.
2386 TAXVILLE ROAD YORK, PA 17406
office (717) 793-9595 fax (717) 793-9606

PREDIX PROPERTIES IV, LLC
Seth Predix, Developer
815 N. GEORGE ST. SUITE 'A', YORK, PA 17404
OFFICE: 717-781-4856

WALL SECTIONS - SHEET 2

NEW APARTMENT BUILDING

91 S. THIRD ST., MOUNT WOLF, PA 17347
MOUNT WOLF BOROUGH, YORK COUNTY

DATE -
SCALE AS NOTED
DWN BY JACK SANDS
DESIGN BY PHIL FREY, AIA
SHEET 9 OF 15

A-8

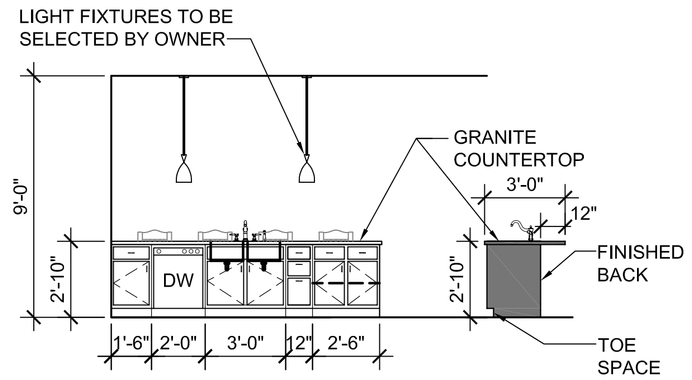

ELEVATION 'A'

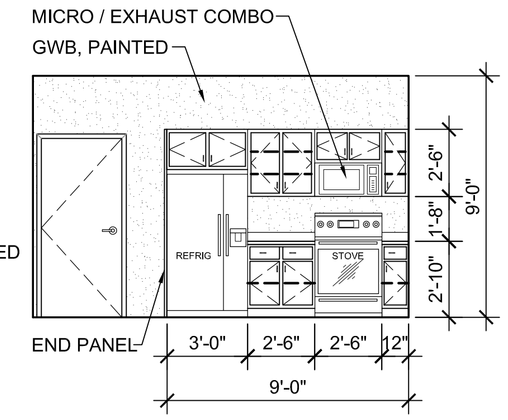

ELEVATION 'B'

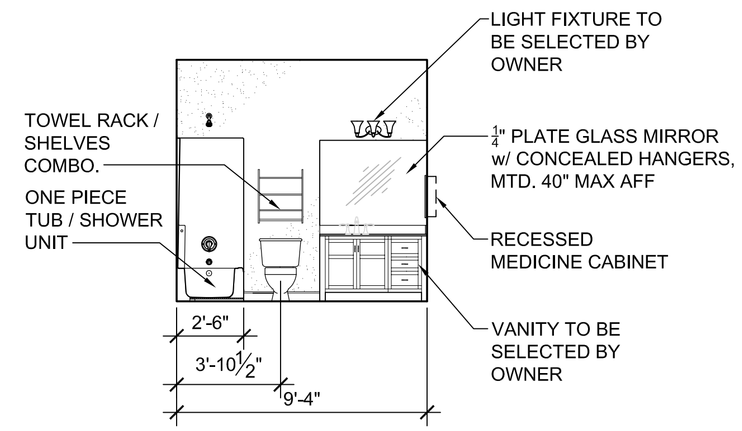

ELEVATION 'C'

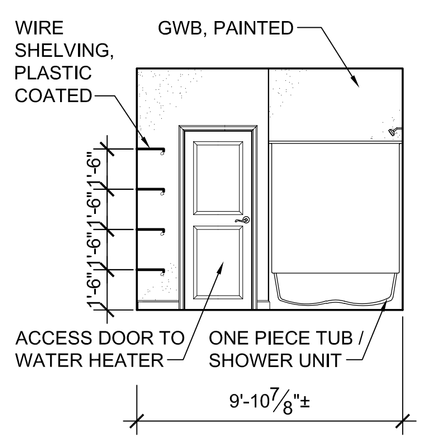

ELEVATION 'D'

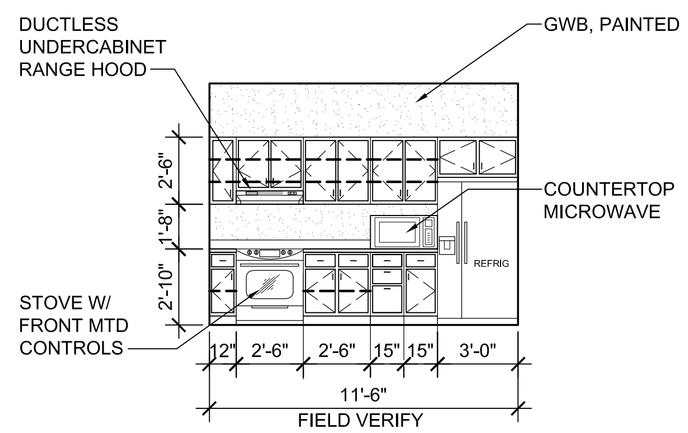

ELEVATION 'E'

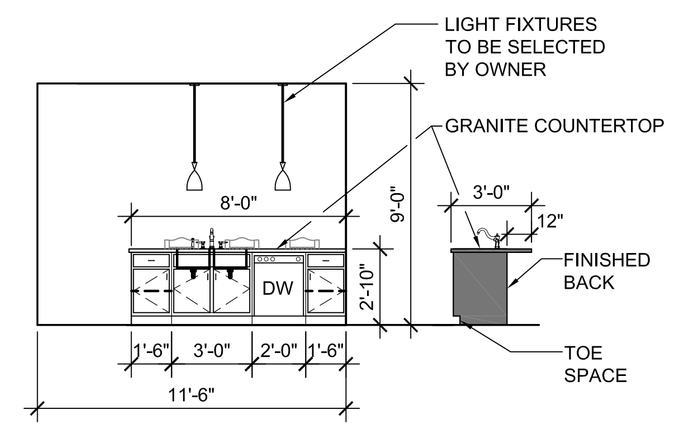

ELEVATION 'F'

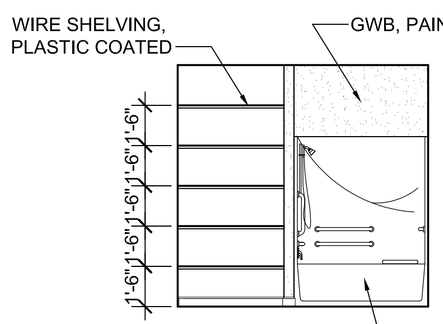

ELEVATION 'G'
ADA UNIT

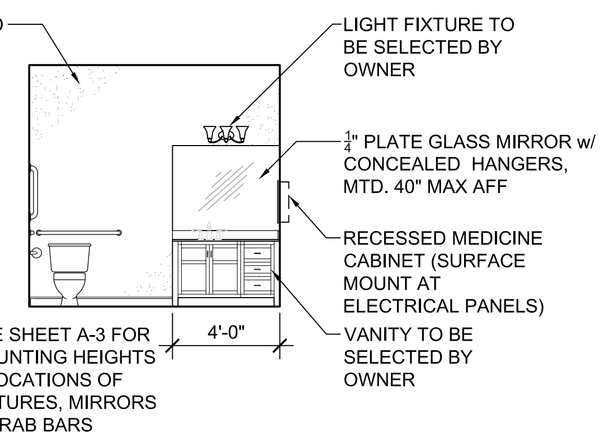

ELEVATION 'H'
ADA UNIT

INTERIOR ELEVATIONS

0 1' 4' 8' 16' 20'
1/4"=1'-0"

FINISH SCHEDULE

	FLOORS					BASE	WALLS				CEILING				REMARKS
	MATERIALS					MAT'L	MAT'L		TRIM		TYPE			HT.	
	COLOR GROUP	CONCRETE SUBSTRATE	PLYWOOD SUBSTRATE	LUXURY VINYL, PLANK	CARPET TILE	CARPET TREADS	WOOD	GWB - PAINTED		PAINT ALL TRIM		GWB - PAINTED			APARTMENT & EXTERIOR DOORS ARE 2-PANEL METAL DOORS BY CECO, STEELCRAFT, PREFINISHED. ALL WINDOW & DOOR TRIM TO BE PAINTED UNLESS PREFINISHED
	X	1	2	3	4	5	1	1		1		1			
APARTMENT ROOMS THRU-OUT , 1ST FLR		1		3			1	1		1		1		9'-0"	
APT ROOMS THRU-OUT , 2ND & 3RD FLR			2	3			1	1		1		1		9'-0"	
BUILDING UTILITY		1					-	1		1		1		9'-0"	
COMMON AREAS		1	2		4		1	1		1		1		9'-0"+	
STAIRS		1	2			5	1	1		1		1		9'-0"	

COMMONWEALTH OF PENNSYLVANIA
REGISTERED PROFESSIONAL
ERIC P. JOHNSTON
ENGINEER NO. 038220 - R

10/10/2022

NOTE: TOP & BOTTOM CHORD OF FLOOR TRUSSES SHALL NOT BE NOTCHED OR CUT: COORDINATE WITH WATER CLOSET & TUB PLUMBING ROUGH-IN'S BY PROVIDING DIMENSIONED SHOP DRAWINGS TO LOCATE CENTERLINES OF FLOOR TRUSSES

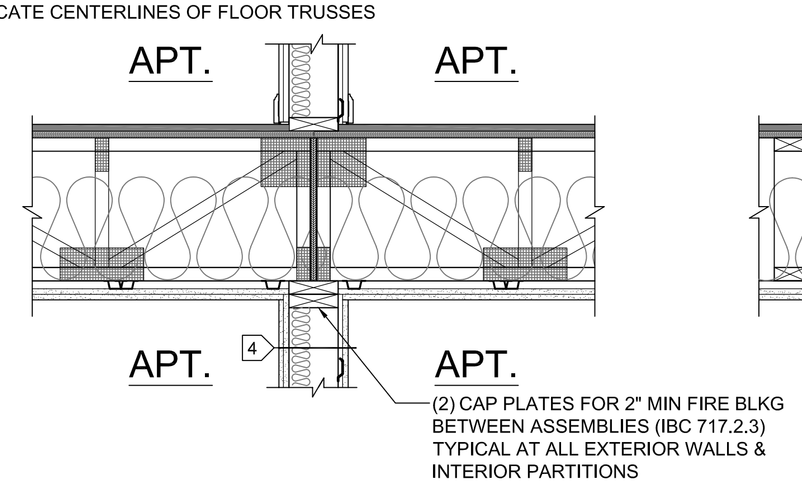

DETAIL 1/A-4

0 6" 1' 2'
1"=1'-0"

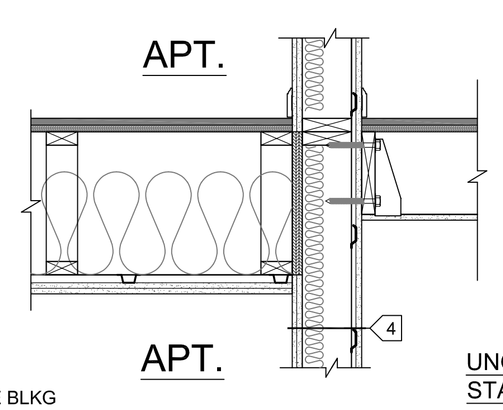

UNOCCUPIED STAIR TOWER

DETAIL 2/A-4

0 6" 1' 2'
1"=1'-0"

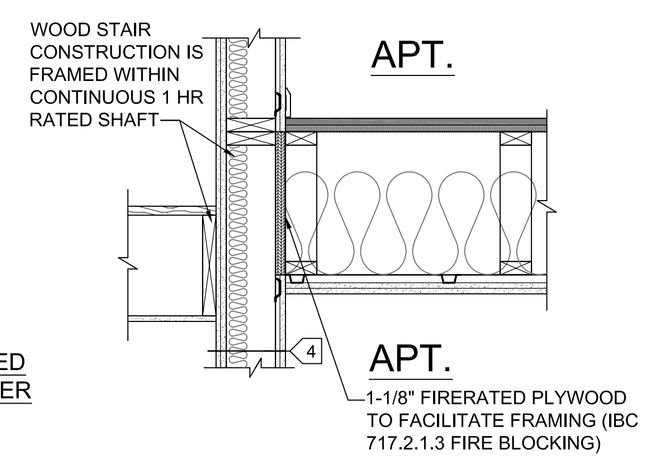

DETAIL 3/A-4

0 6" 1' 2'
1"=1'-0"

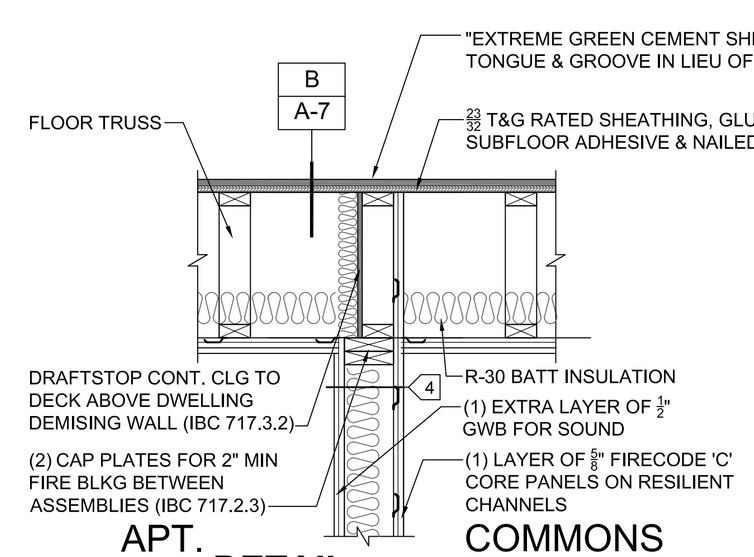

DETAIL 4/A-4

0 6" 1' 2'
1"=1'-0"

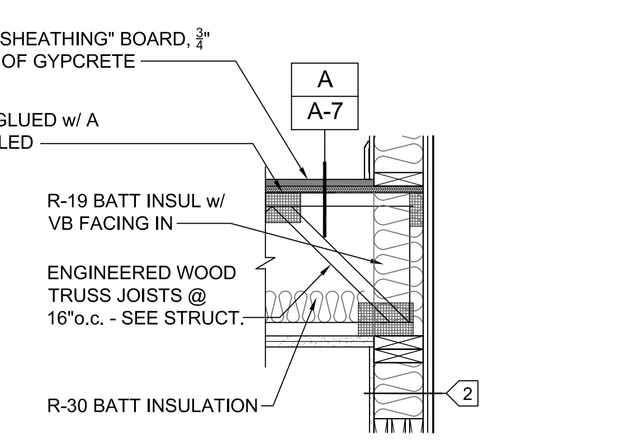

HORIZONTAL FLOOR ASSEMBLY:
ONE HOUR RATED - GA FILE NO. FC 5519, UL DESIGN L574
STC = 52db (SOUND TRANSMISSION CLASS)
IIC 51 (IMPACT INSULATION CLASS) TYP. FOR 2ND & 3RD FLOOR

DETAIL 5/A-4

0 6" 1' 2'
1"=1'-0"

REVISIONS / SUBMISSIONS
PERMIT DRAWINGS 10/7/22

JOHNSTON AND ASSOCIATES, INC.
CONSULTING ENGINEERS LAND DEVELOPMENT CONSULTANTS STRUCTURAL ENGINEERS
ERIC P. JOHNSTON, P.E.
2386 TAXVILLE ROAD YORK, PA 17408
office (717) 793-9595 fax (717) 793-9696

PREDIX PROPERTIES IV, LLC
Seth Predix, Developer
815 N. GEORGE ST. SUITE 'A', YORK, PA 17404
OFFICE: 717-781-4856

INTERIOR ELEVATIONS & MISC. DETAILS

NEW APARTMENT BUILDING
91 S. THIRD ST., MOUNT WOLF, PA 17347
MOUNT WOLF BOROUGH, YORK COUNTY

DATE .
SCALE AS NOTED
DWN BY JACK SANDS
DESIGN BY PHIL FREY, AIA
SHEET 10 OF 15
A-9

WINDOW SCHEDULE

WINDOW NUMBER	LOCATION	NOMINAL SIZE	FRAME TYPE	FRAME STYLE	FRAME MAT'L	FRAME GLASS	COLOR	REMARKS (W-1 WINDOW DESIGNATION)
W-1	APARTMENTS	36"W. x 60"H.	W-1	SINGLE HUNG	VINYL	11/16" INSUL LOW-E	WHITE	MFG. & PRODUCT LINE AS SELECTED BY OWNER
W-2	APARTMENTS & STAIR	PR.36"W. x 60"H.	W-2	SINGLE HUNG	VINYL	11/16" INSUL LOW-E	WHITE	MFG. & PRODUCT LINE AS SELECTED BY OWNER

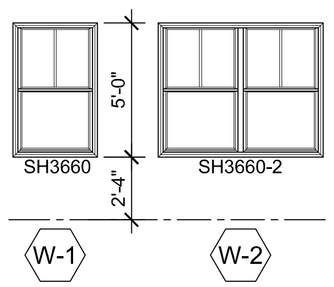

NOTES:
1. ROUGH OPENING SIZE TO COORDINATED WITH THE SELECTED MANUFACTURER'S SHOP DRAWINGS.
2. ALL WINDOWS TO HAVE INSECT SCREENS.
3. PROVIDE ALL NECESSARY TRIM & ACCESSORIES AS REQUIRED FOR A COMPLETE INSTALLATION.

WINDOW TYPES

1/4" = 1'-0"

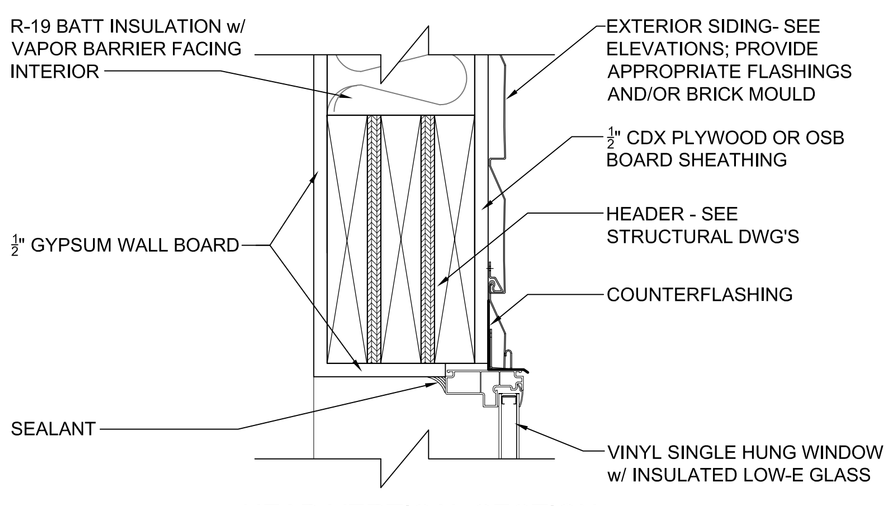

HEAD VERTICAL SECTION

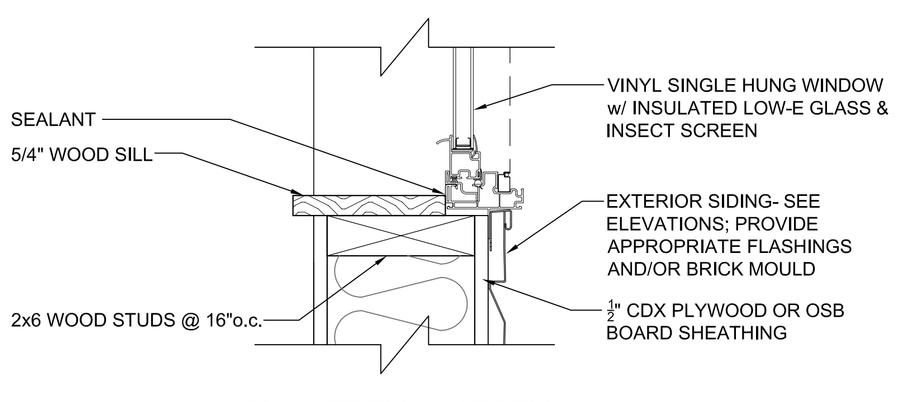

SILL VERTICAL SECTION

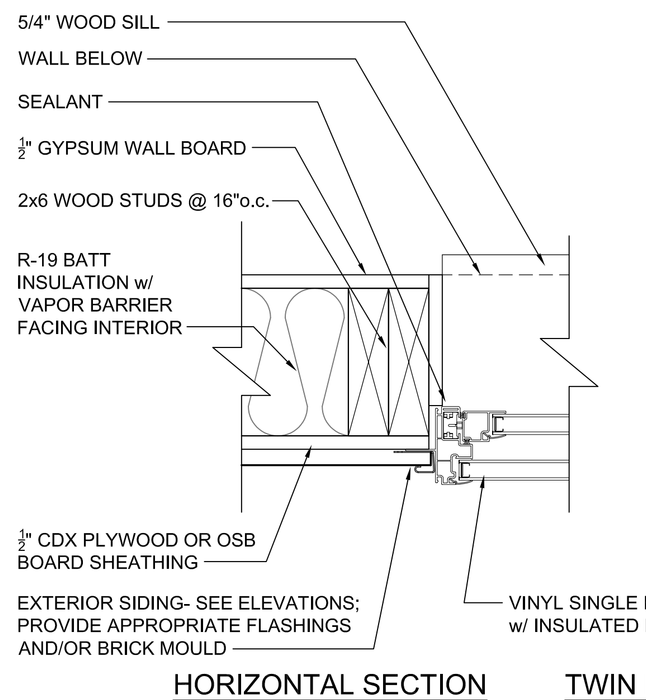

HORIZONTAL SECTION

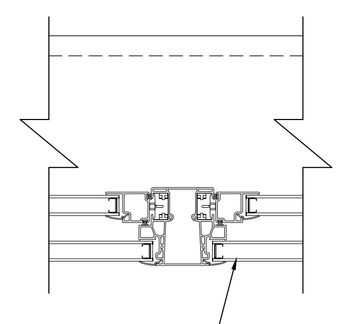

TWIN HORIZONTAL SECTION

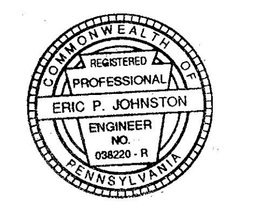

10/10/2022

WINDOW DETAILS

3" = 1'-0"

0 1" 2" 3" 4" 5" 6" 1'

3"=1'-0"

DOOR SCHEDULE - TYPICAL ONE BEDROOM APARTMENT UNIT

DOOR NO.	ROOM NAME	DOOR TYPE	DOOR W.	DOOR H.	DOOR THK.	DOOR MAT'L	DOOR FIN.	DOOR LVR.	FRAME TYPE	FRAME MAT'L	FRAME FIN.	FRAME DETAILS	FIRE RATED MIN.	GLASS	REMARKS *ALL INTERIOR APARTMENT DOORS HAVE THE OPTION TO BE PREHUNG UNITS
1A	APT. ENTRANCE	2PNL	3'-0"	6'-8"	1-3/4"	HM	PNT	—	F1	HM	PNT	—	60	—	LOCKSET, SOUND & SMOKE SEAL
2A	PANTRY	2PNL	2'-8"	6'-8"	1-3/8"	HDF	PNT	—	F1*	WD	PNT	—	—	—	CLOSET LATCHSET
3A	HVAC UNIT	2LVR	2-6"	6'-8"	1-3/8"	HDF	PNT	FULL	F1*	WD	PNT	—	—	—	LOCKSET
4A	BEDROOM DOOR	2PNL	3'-0"	6'-8"	1-3/8"	HDF	PNT	UC	F1*	WD	PNT	—	—	—	PRIVACY
5A	BEDROOM CLOSET	PR2PNL	PR3'-0"	6'-8"	1-3/8"	HDF	PNT	—	F1*	WD	PNT	—	—	—	PRESSURE LATCH, FIXED LEVER
6A	STORAGE CLOSET	2PNL	3'-0"	6'-8"	1-3/8"	HDF	PNT	—	F1*	WD	PNT	—	—	—	LATCHSET
7A	BATH	2PNL	3'-0"	6'-8"	1-3/8"	HDF	PNT	UC	F1*	WD	PNT	—	—	—	PRIVACY
8A	WH CLOSET	2PNL	2-6"	6'-8"	1-3/8"	HDF	PNT	UC	F1*	WD	PNT	—	—	—	LATCHSET
9A	LAUNDRY CLOSET	PR2PNL	PR2'-6"	6'-8"	1-3/8"	HDF	PNT	—	F1*	WD	PNT	—	—	—	PRESSURE LATCH, FIXED LEVER

DOOR SCHEDULE - TYPICAL TWO BEDROOM APARTMENT UNIT

DOOR NO.	ROOM NAME	DOOR TYPE	DOOR W.	DOOR H.	DOOR THK.	DOOR MAT'L	DOOR FIN.	DOOR LVR.	FRAME TYPE	FRAME MAT'L	FRAME FIN.	FRAME DETAILS	FIRE RATED MIN.	GLASS	REMARKS *ALL INTERIOR APARTMENT DOORS HAVE THE OPTION TO BE PREHUNG UNITS
1B	APT. ENTRANCE	2PNL	3'-0"	6'-8"	1-3/4"	HM	PNT	—	F1	HM	PNT	—	60	—	LOCKSET, SOUND & SMOKE SEAL
2B	PANTRY	2PNL	2'-8"	6'-8"	1-3/8"	HDF	PNT	—	F1*	WD	PNT	—	—	—	CLOSET LATCHSET
3B	HVAC UNIT	2LVR	2-6"	6'-8"	1-3/8"	HDF	PNT	FULL	F1*	WD	PNT	—	—	—	LOCKSET
4B	BEDROOM DOOR	2PNL	3'-0"	6'-8"	1-3/8"	HDF	PNT	UC	F1*	WD	PNT	—	—	—	PRIVACY
5B	BEDROOM CLOSET	PR2PNL	PR3'-0"	6'-8"	1-3/8"	HDF	PNT	—	F1*	WD	PNT	—	—	—	PRESSURE LATCH, FIXED LEVER
6B	COATS	2PNL	2'-0"	6'-8"	1-3/8"	HDF	PNT	—	F1*	WD	PNT	—	—	—	LATCHSET
7B	BATH	2PNL	3'-0"	6'-8"	1-3/8"	HDF	PNT	UC	F1*	WD	PNT	—	—	—	PRIVACY
8B	WH CLOSET	2PNL	2-6"	6'-8"	1-3/8"	HDF	PNT	UC	F1*	WD	PNT	—	—	—	LATCHSET
9B	BEDROOM #2 CLOSET / LAUNDRY CLOSET	PR2PNL	PR2'-6"	6'-8"	1-3/8"	HDF	PNT	UC	F1*	WD	PNT	—	—	—	PRESSURE LATCH, FIXED LEVER

DOOR SCHEDULE - ADA ONE BEDROOM APARTMENT UNIT

DOOR NO.	ROOM NAME	DOOR TYPE	DOOR W.	DOOR H.	DOOR THK.	DOOR MAT'L	DOOR FIN.	DOOR LVR.	FRAME TYPE	FRAME MAT'L	FRAME FIN.	FRAME DETAILS	FIRE RATED MIN.	GLASS	REMARKS *ALL INTERIOR APARTMENT DOORS HAVE THE OPTION TO BE PREHUNG UNITS
1C	APT. ENTRANCE	2PNL	3'-0"	6'-8"	1-3/4"	HM	PNT	—	F1	HM	PNT	—	60	—	LOCKSET, SOUND & SMOKE SEAL
2C	HVAC UNIT	2LVR	2-6"	6'-8"	1-3/8"	HDF	PNT	FULL	F1*	WD	PNT	—	—	—	LOCKSET
3C	LAUNDRY CLOSET	PR2PNL	PR2'-6"	6'-8"	1-3/8"	HDF	PNT		F1*	WD	PNT	—	—	—	PRESSURE LATCH, FIXED LEVER
4C	COATS	2PNL	2'-0"	6'-8"	1-3/8"	HDF	PNT	—	F1*	WD	PNT	—	—	—	LATCHSET
5C	BEDROOM DOOR	2PNL	3'-0"	6'-8"	1-3/8"	HDF	PNT	UC	F1*	WD	PNT	—	—	—	PRIVACY
6C	BATH	2PNL	3'-0"	6'-8"	1-3/8"	HDF	PNT	UC	F1*	WD	PNT	—	—	—	PRIVACY
7C	STORAGE CLOSET	2PNL	3'-0"	6'-8"	1-3/8"	HDF	PNT	—	F1*	WD	PNT	—	—	—	LATCHSET
8C	WH CLOSET	2PNL	2-6"	6'-8"	1-3/8"	HDF	PNT	UC	F1*	WD	PNT	—	—	—	LATCHSET

DOOR SCHEDULE - EXTERIOR

DOOR NO.	ROOM NAME	DOOR TYPE	DOOR W.	DOOR H.	DOOR THK.	DOOR MAT'L	DOOR FIN.	DOOR LVR.	FRAME TYPE	FRAME MAT'L	FRAME FIN.	FRAME DETAILS	FIRE RATED MIN.	GLASS	REMARKS FIELD MEASURE ALL DOOR OPENING DIMENSIONS
001	EXTERIOR - WEST	FG	3'-0"	7'-0"	1-3/4"	INSUL HM	PNT	—	F1	HM	PNT	—	—	INSUL	PANIC, CLOSER, 4"JAMB HEAD INTERIOR ADA SIGN
002	EXTERIOR - EAST	FG	3'-0"	7'-0"	1-3/4"	INSUL HM	PNT	—	F1	HM	PNT	—	—	INSUL	PANIC, CLOSER, SIDELITE, 4" JAMB HEAD, INTERIOR ADA SIGN
003	UTILITY	F	3-0"	7'-0"	1-3/4"	INSUL HM	PNT	—	F1	HM	PNT	—	—	—	LOCKSET, 4" JAMB HEAD

NOTES:
1. HOLLOW METAL (HM) DOORS & FRAMES: STEELCRAFT, CECO OR APPROVED.
2. ALUMINUM STOREFRONT: KAWNEER TRI-FAB OR APPROVED.

DOOR SCHEDULE ABBREVIATIONS

ALUM	ALUMINUM
BL	BORROWED LITE
CR	CARD READER
INSUL	INSULATED
TPG	TEMPERED GLAZING
PNC	PANIC HARDWARE
FAC	FACTORY
HM	HOLLOW METAL
SCW	SOLID CORE WOOD
UC	UNDER CUT
PNL	PANEL
PNT	PAINT
HDF	HIGH-DENSITY FIBERBOARD
LVR	LOUVERED

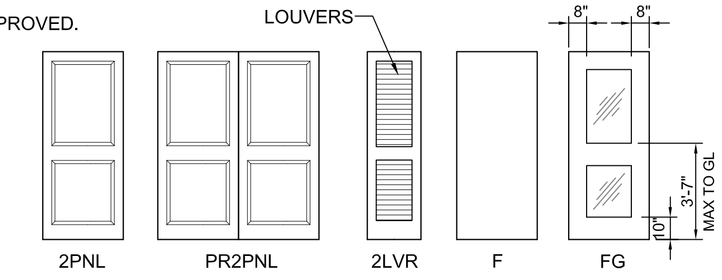

DOOR TYPES

1/4" = 1'-0"

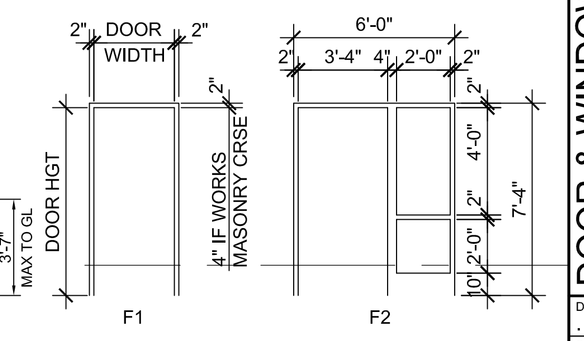

FRAME TYPES

1/4" = 1'-0"

REVISIONS / SUBMISSIONS

PERMIT DRAWINGS 10/7/22

JOHNSTON AND ASSOCIATES, INC.
CONSULTING ENGINEERS LAND DEVELOPMENT CONSULTANTS STRUCTURAL ENGINEERS
ERIC P. JOHNSTON, P.E.
2386 TAXVILLE ROAD YORK, PA 17408
office (717) 793-9595 fax (717) 793-9696

PREDIX PROPERTIES IV, LLC
Seth Predix, Developer
815 N. GEORGE ST. SUITE 'A', YORK, PA 17404
OFFICE: 717-781-4856

DOOR & WINDOW SCHEDULES

NEW APARTMENT BUILDING
91 S. THIRD ST., MOUNT WOLF, PA 17347
MOUNT WOLF BOROUGH, YORK COUNTY

DATE .

SCALE AS NOTED

DWN BY JACK SANDS

DESIGN BY PHIL FREY, AIA

SHEET 11 OF 15

A-10

STRUCTURAL NOTES

STRUCTURAL DESIGN CRITERIA

A. FLOOR LIVE LOAD:
40 PSF FOR APARTMENT AREAS.
100 PSF FOR CORRIDORS.
FLOOR DEAD LOAD: DL=15 PSF
B. 100 PSF FOR STAIRS.
C. GOUND SNOW LOAD, pg = 38 PSF.
D. ROOF LIVE LOAD, LL = 35 PDF.
E. ROOF DEAD LOAD, DL = 10 PSF.
F. BASIC WIND SPEED, V = 90 MPH (3 SECOND GUST).
G. BASIC WALL PRESSURE = 13 PSF, OVERHANG UPLIFT PRESSURE = 21 PSF.
H. WIND EXPOSURE CATEGORY C.
I. ASSUMED MINIMUM SOIL BEARING CAPACITY = 2,000 PSF.
J. SEISMIC DESIGN CATEGORY B - SITE CLASS D.

MASONRY

A. SCOPE IS LIMITED TO NON-STRUCTURAL BRICK VENEER.

STRUCTURAL STEEL

A. ALL WORK SHALL BE DONE IN ACCORDANCE WITH THE INTERNATIONAL BUILDING CODE, LATEST ADOPTED ADDITION, AISC MANUAL OF STEEL CONSTRUCTION, AND ANY LOCAL REQUIRMENTS.
B. CONTRACTOR SHALL VERIFY ALL CONDITIONS AND DIMENSIONS PRIOR TO FABRICATION AND ERECTION OF STEEL.
C. STRUCTURAL STEEL PLATE MATERIAL SHALL MEET THE REQUIREMENTS OF ASTM-A36.
D. ANY TUBULAR COLUMN STEEL SHALL MEET THE REQUIREMENTS OF ASTM A500, GR.B, Fy = 36 KSI.
E. ANCHOR ROD MATERIAL SHALL MEET THE REQUIREMENTS OF ASTM A 307, GRADE 2.
ALL STEEL SHALL BE PROPERLY PRIMED EXCEPT AREAS THAT REQUIRE FIELD WELDING.
F. ANY BEARING PLATES NOT DETAILED SHALL BE THE SAME THICKNESS AS THE FLANGE OF THE CONTACT MEMBER WITH A WIDTH OF THE CONTACT MEMBER PLUS 4 INCHES.
G. ANY CONNECTIONS NOT DETAILED ON THE STRUCTURAL PLANS SHALL BE PROVIDED BY THE CONTRACTOR OR STEEL DETAILER.

WELDING

A. ALL WELDING AND CUTTING SHALL BE PERFORMED IN ACCORDANCE WITH THE REQUIREMENTS OF THE AMERICAN WELDING SOCIETY (AWS) CODE.
B. ALL INTERSECTING STEEL SHAPES WHICH ARE NOT BOLTED SHALL BE CONNECTED BY A FILLET WELD ALL AROUND, UNLESS OTHERWISE SHOWN. WHERE FILLET WELD SIZES ARE NOT SHOWN, THEY SHALL HAVE AN EFFECTIVE THROAT OF 1/16" LESS THAN THE THICKNESS OF THE CONNECTED PARTS.
C. ANY JOIST WELD SHALL BE COMPLETED WITH AN E7024 ELECTRODE WELDING ROD. ALL DECK WELDS SHALL BE COMPLETED WITH AN E6022 ELECTRODE WELDING ROD. ALL OTHER SPECIFIED WELDS SHALL BE COMPLETED WITH AN E7018 ELECTRODE WELDING ROD.

BOLTED CONNECTIONS

A. ALL BOLTED CONNECTIONS SHALL BE MADE WITH BOLTING MATERIAL MEETING THE SPECIFICATIONS OF ASTM-325 FOR THE BOLT MATERIAL, ASTM-A563 FOR HEX NUTS, AND ASTM A 436 FOR HARDENED WASHERS.
B. CONTRACTOR SHALL USE HARDENED WASHERS BENEATH THE TURNED ELEMENT OF ALL BOLTS OR NUTS.
C. CONTRACTOR SHALL NOT REUSE BOLTS, NUTS, AND WASHERS.

CONCRETE

A. ALL WORK SHALL BE DONE IN ACCORDANCE WITH THE INTERNATIONAL BUILDING CODE, LATEST EDITION, ACI 318-05, AND ANY LOCAL ORDINANCES.
B. CONTRACTOR SHALL VERIFY ALL CONDITIONS AND DIMENSIONS PRIOR TO PLACING CONCRETE.
C. CONTRACTOR SHALL COORDINATE ALL WORK WITH ARCHITECTURAL, MECHANICAL, PLUMBING, AND ELECTRICAL DRAWINGS PRIOR TO PLACING CONCRETE TO ENSURE SLEEVES AND BLOCK OUTS ARE PROPERLY PLACED.
D. CONTRACTOR SHALL BE RESPONSIBLE FOR PROPER PLACEMENT OF ALL ANCHOR BOLTS, ANCHORS OR STRAPS, ETC. AND SHALL INSTALL IN ACCORDANCE WITH MANUFACTURER'S RECOMMENDATIONS.
E. CONTRACTOR SHALL PROVIDE ALL FORM WORK, POUR STOPS, SHORING, ETC., REQUIRED TO COMPLETE THE CONSTRUCTION.
F. FOOTINGS, FOUNDATIONS, AND SLABS ON GRADE SHALL BE CONSTRUCTED ON NATURAL SOIL OR STRUCTURAL FILL.

MATERIALS

A. ALL CONCRETE SHALL HAVE A MINIMUM 28 DAY COMPRESSIVE STRENGTH OF 3000 PSI. FOUNDATION WALLS, FLAT SLABS, AND RETAININGWALLS OVER 4'-0" HIGH SHALL HAVE MINIMUM 28 DAY COMPRESSIVE STRENGTH OF 3,500 PSI.
B. ALL CONCRETE EXPOSED TO WEATHER SHALL HAVE AN AIR ENTRAINMENT OF 6.5% ± 1.5%. NO ADMIXTURES CONTAINING CALCIUM CHLORIDE SHALL BE PERMITTED. MAXIMUM AGGREGATE SIZE FOR CONCRETE SHALL BE ¾", AND MAXIMUM SLUMP SHALL BE 4", AND 3" FOR SLABS ON GRADE. ALL CONCRETE, EXCEPT FOOTINGS, SHALL CONTAIN A WATER REDUCING ADD MIXTURE.
ALL CONCRETE SHALL BE SAMPLED AND TESTED BY AN INDEPENDENT AGENCY RETAINED BY THE CONTRACTOR. NOTIFY THE TESTING AGENCY 48 HOURS BEFORE POURING OF ANY CONCRETE.

REINFORCING

A. REINFORCING STEEL SHALL BE DEFORMED BARS CONFORMING TO ASTM A 615 GRADE 60. REINFORCING SHALL BE PROPERLY TIED INTO PLACE PRIOR TO PLACING CONCRETE, FIELD BENT DOWELS MAY CONFORM TO ASTM A615 GRADE 40.
B. ALL REINFORCING SHALL BE PLACED IN ACCORDANCE WITH ACI DETAILING MANUAL AND STANDARDS - LATEST EDITION
C. LAP SPLICES IN CONTINUOUS REINFORCEMENT A MINIMUM OF 40 BAR DIAMETERS.

SLABS AND FOOTINGS

A. ALL SLABS SHALL BE REINFORCED WITH 6X6 10 GAUGE STEEL WELDED WIRE FABRIC LOCATED IN CENTER OF SLAB.
B. DEPRESS SLABS AS REQUIRED AND COORDINATE WITH OTHER ITEMS SHOWN ON DRAWINGS.
C. CONTRACTOR SHALL ENSURE THAT HEAVY EQUIPMENT OR STAGED MATERIALS DO NOT CRACK AND DAMAGE SLABS ON GRADE. DAMAGED SLABS SHALL BE REPLACED TO SATISFACTION OF THE OWNER.
D. SEE DRAWINGS FOR ANY FOOTING SIZES AND REIFORCING REQUIREMENTS.

STRUCTURAL FILL

A. FILL PLACEMENT SHALL BE MADE IN LOOSE LIFTS OF 8 INCHES AND HAVE A MOISTURE CONTENT WITHIN 2% OF OPTIMUM, COMPACTED TO AT LEAST 95% MAXIMUM DENSITY (ASTM D 1557).
B. FOOTINGS SHALL BE SUPPORTED ON UNDISTURBED NATIVE SOILS OR A MINIMUM OF 24 INCHES OF PROPERLY PLACED AND COMPACTED FILL EXTENDED A MINIMUM OF 12 INCHES BEYOND FOOTING EDGES.
C. SLABS ON GRADE SHALL BE SUPPORTED ON UNDISTURBED NATIVE SOIL OR A MINIMUM OF 12 INCHES OF PROPERLY PLACED AND COMPACTED FILL TOGETHER WITH A 4 INCH STONE FREE, GRAVEL DRAINAGE SUBBASE PLACED ON TOP OF THE FILL.

WOOD FRAMING

A. ALL WOOD FRAMING SHALL BE FABRICATED AND ERECTED IN ACCORDANCE WITH THE NATIONAL DESIGN SPECIFICATION FOR WOOD CONSTRUCTION, LATEST EDITION, AS PUBLISHED BY THE NATIONAL FOREST PRODUCTS ASSOCIATION.
B. ALL LUMBER SHALL BE NO. 2 HEM FIR 19% MAXIMUM MOISTURE CONTENT OR BETTER UNLESS NOTED. THE MINIMUM DESIGN VALUES SHALL BE AS FOLLOWS: Fb = 850 psi, Fv = 75 psi, E = 1,300,000 psi.
C. ALL STEEL TIMBER FASTENINGS AND JOIST HANGERS SHALL BE A MINIMUM OF 16 GA. GALVANIZED STEEL WITH A RATED LOAD CAPACITY EQUAL TO OR EXCEEDING IMPOSED LOAD REQUIREMENTS.
D. NAILING OF ALL FRAMING SHALL MEET THE RECOMMENDED FASTENING SCHEDULE CONTAINED IN IBC.
E. CUTTING AND NOTCHING OF WOOD FRAMING SHALL ONLY BE PERMITTED WITHIN THE LIMITS PRESCRIBED BY IBC.

WOOD RAFTERS, JOISTS, AND BEAMS

A. PROVIDE SOLID BRIDGING ON A CONTINUOUS HEADER AT THE BEARING OF ROOF AND FLOOR JOISTS ON BRIDGE PLATES.
B. PROVIDE SOLID OR DIAGONAL BRIDGING BETWEEN ALL RAFTERS @ BEARING.
ALL DOUBLE JOISTS OR HEADERS TO BE SPIKED TOGETHER WITH 10D NAILS @ 16" O/C.

PLYWOOD AND WOOD DECKING

A. ALL PLYWOOD SHALL MEET THE REQUIREMENTS OF THE PLYWOOD DESIGN SPECIFICATIONS AS PUBLISHED BY THE AMERICAN PLYWOOD ASSOCIATION.
B. ENTIRE ROOF SHALL BE 5/8" - 24/0 PLYWOOD. PROVIDE PLY CLIPS AT CENTERLINE OF PLYWOOD SPAN AT ALL EDGES PARALLEL TO SPAN.
C. PLYWOOD SHEATHING SHALL BE CONTINUOUS OVER MINIMUM OF 3 SPANS.
D. PLYWOOD SHALL BE SECURELY FASTENED 3/8" FROM THE EDGE, NOT LESS THAN 6 INCHES O/C AT ALL EDGES, AND NOT LESS THAN 12 INCHES O/C FOR ALL INTERMEDIATE JOISTS. USE 6D NAILS FOR 3/8" AND ½" PLYWOOD AND 10D NAILS FOR 5/8" PLYWOOD.

WOOD TRUSSES

A. WOOD TRUSSES SHALL BE DESIGNED, FABRICATED AND ERRECTED IN ACCORDANCE WITH THE DESIGN SPECIFICATIONS FOR LIGHT METAL PLATE CONNECTED WOOD TRUSSES TPI-85 AND BRACING OF WOOD TRUSSES: COMMENTARY AND RECOMMENDATIONS BWT-76 AS PUBLISHED BY THE TRUSS PLATE INSTITUE AND IN ACCORDANCE WITH THE NATIONAL DESIGN SPECIFICATION FOR WOOD CONSTRUCTION, LATEST EDITION.
B. ALL TRUSSES SHALL BE DESIGNED BY THE MANUFACTURER FOR ALL DEAD AND LIVE LOADS INDICATED ON THE DRAWINGS AND IN COMFORMANCE WITH THE APPLICABLE BUILDING CODES. THE MANUFACTURER SHALL PROVIDE A DETAILED LIST OF LOAD COMBINATIONS ON THE SHOP DRAWING SUBMISSION, AND INCLUDE A DEAD PLUS WIND LOAD CASE IN THE TRUSS DESIGN.
C. ALL LUMBER USED IN THE TRUSSES SHALL BE #2 SOUTHERN PINE 19% MAXIMUM MOISTURE CONTENT, OR APPROVED. THE MINIMUM DESIGN VALUES SHALL BE AS FOLLOWS: Fb = 1500 psi, Fv = 90 psi, E = 1,600,000 psi.
D. ALL METAL CONSTRUCTION PLATES AND HARDWARE SHALL BE GALVANIZED STEEL.
E. TRUSS MANUFACTURER SHALL PROVIDE SIMPSON STRONG TIE ANCHORS AT EACH TRUSS BEARING POINT AND SHALL COORDINATE AND DEFINE ANCHOR SIZE AND LOCATION ON THE SHOP DRAWINGS.
F. CONTRACTOR SHALL SUBMIT CALCULATIONS AND SHOP DRAWINGS, COMPLETE WITH ERECTION PLANS AND SHOWING ALL BRIDGING. SHOP DRAWINGS SHALL INDICATE THE SIZE AND CAPACITY OF ALL CONNECTING PLATES, AND INDICATE THE WOOD GRADE, MEMBER SIZE, AND WEB CONFIGURATION OF ALL TRUSSES AND WOOD FLOOR TRUSSES. SHOP DRAWINGS AND CALCULATIONS SHALL BE SIGNED AND SEALED BY AN ENGINEER REGISTERED IN PENNSYLVANIA.
G. ALLOWANCE SHALL BE MADE FOR POTENTIAL UPLIFT OF ROOF TRUSS BOTTOM CHORDS THAT MIGHT BE CAUSED BY DISTORTION OF THE TRUSS MEMBERS DUE TO VARIATIONS IN THE MOISTURE CONTENT OF THE WOOD TRUSS MEMBERS.

SHEAR WALL BRACING NOTES

A. IBC 2308.6.1 BRACED WALL LINES ARE PROVIDED BY THE (4) STRAIGHT EXTERIOR WALLS ON ALL 3 FLOORS WHICH MEET FIGURE & TABLE 2308.6.1 LATERAL BRACING SYSTEMS AND 2308.6.2 BRACED WALL PANELS; ½" (7/16" actual), OSB ORIENTED STAND BOARD - STRUCTURAL FIBERBOARD SHEATHING (SFB) MEETS TABLE 2308.5.11 MINIMUM THICKNESS OF WALL SHEATHING, OR ½" EXTERIOR PLYWOOD OR ½" EXTERIOR PARTICLE BOARD SHEATHING (PBS).

B. IBC 2308.6.1 BRACED WALL LINES ARE ALSO PROVIDED BY THE STRAIGHT LONGITUDINAL & TRANSVERSE "DEMISING WALLS" ALIGNED THROUGH ALL 3 FLOORS, ½" GYPSUM SHEATHING (GB) ON BOTH SIDES MEETS TABLE 2308.6.3(1) BRACING METHODS.

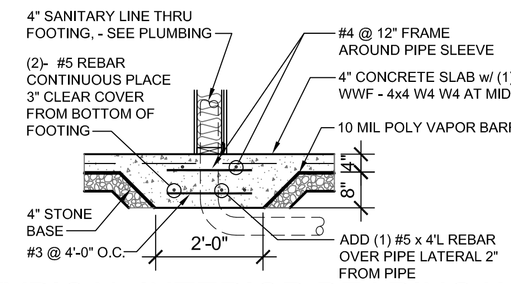

TYPICAL INTERIOR BEARING WALL FOOTING DETAIL (1 / S-1)

1/2" = 1'-0"
0 1' 4' 8'

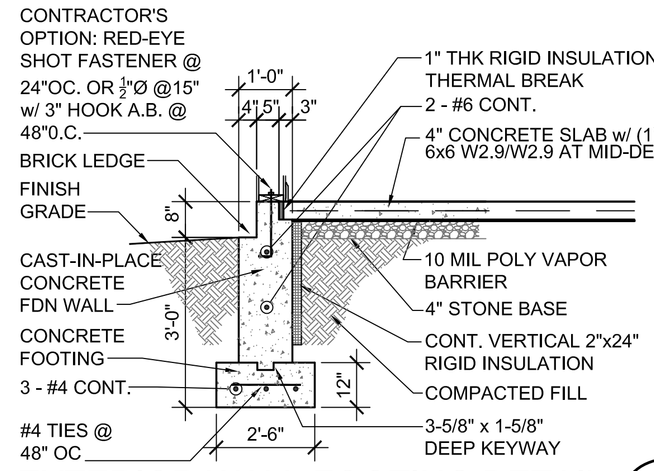

EXTERIOR WALL FOOTING DETAIL (2 / S-1)

1/2" = 1'-0"
0 1' 4' 8'

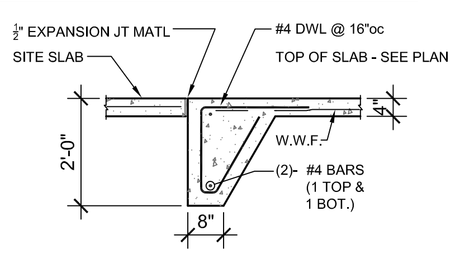

TYPICAL ENTRANCE SLAB SECTION (3 / S-1)

1/2" = 1'-0"
0 1' 4' 8'

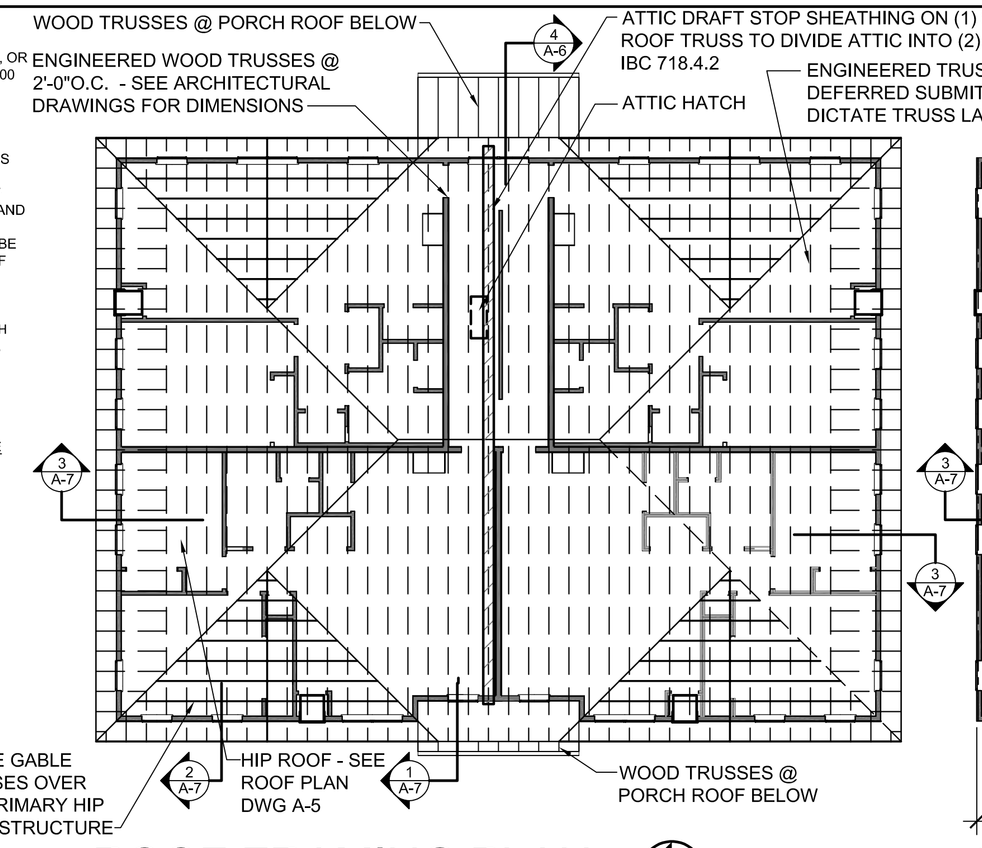

ROOF FRAMING PLAN

01' 8' 16' 24' 32'
3/32"=1'-0"

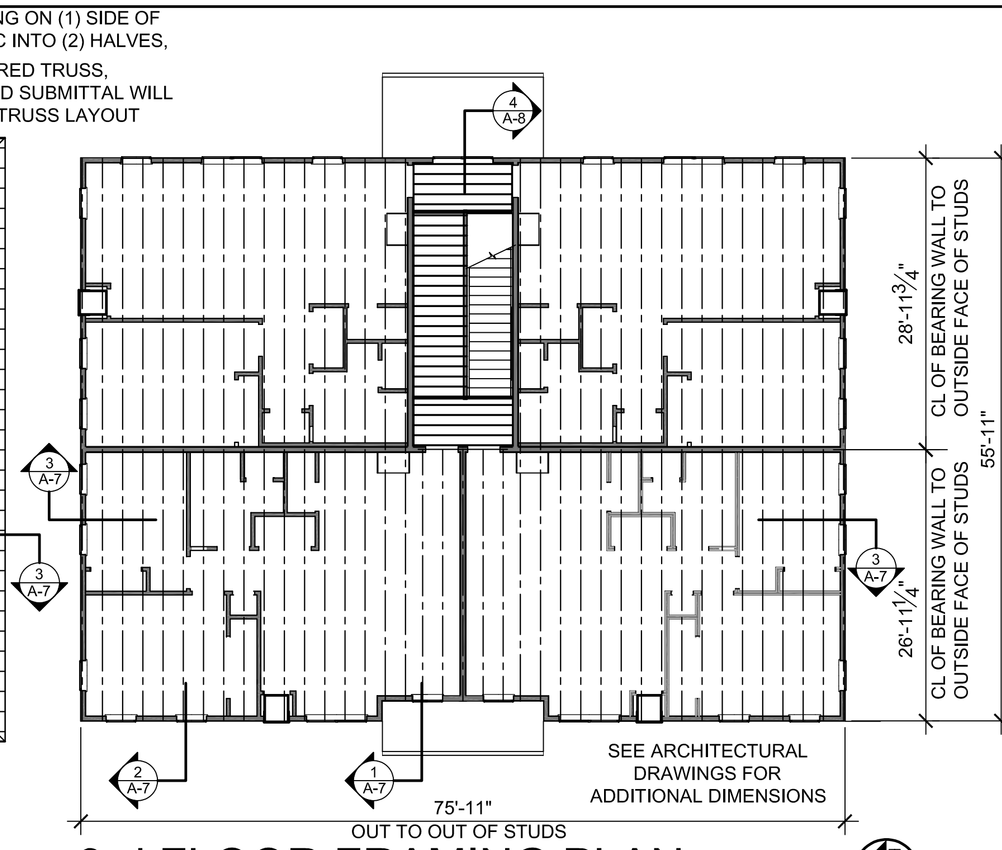

3rd FLOOR FRAMING PLAN

01' 8' 16' 24' 32'
3/32"=1'-0"

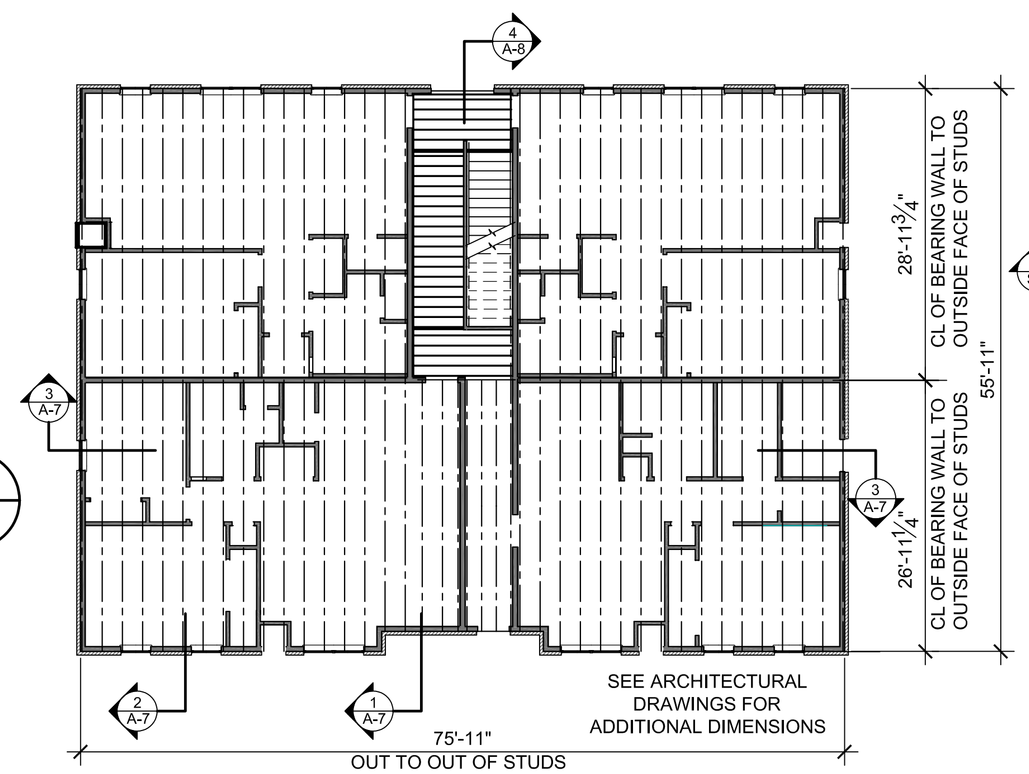

2nd FLOOR FRAMING PLAN

01' 8' 16' 24' 32'
3/32"=1'-0"

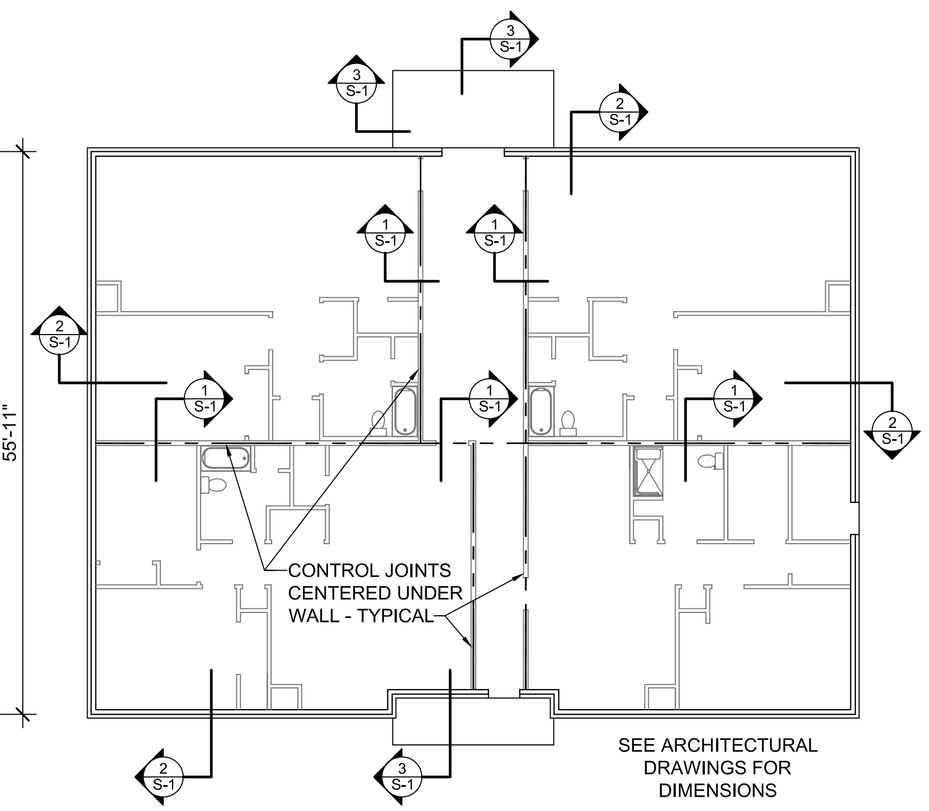

FOUNDATION / SLAB PLAN

01' 8' 16' 24' 32'
3/32"=1'-0"

NOTES:

1. PROVIDE KEYED OR SAWCUT CONTROL JOINTS IN SLABS ON GRADE WHERE NOTED (C.J.) ON THE PLAN.
2. KEYED CONTROL JOINTS MUST BE USED BETWEEN ADJACENT POURS.
3. AT KEYED CONSTRUCTION JOINTS, STOP W.W.F. EACH SIDE OF JOINT.
4. AT SAWCUT CONTROL JOINTS, CUT ALTERNATE WIRES CROSSING THE JOINT.
5. SAWCUT JOINT AS SOON AS SURFACE IS FIRM ENOUGH SO THAT IT WILL NOT BE TORN OR DAMAGED BY BLADE (APPROX. 4-8 HOURS AFTER CONCRETE HARDENS) FILL JOINT WITH SEALANT

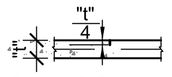

SAWCUT CONTROL JOINT

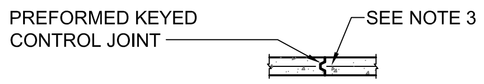

KEYED CONTROL JOINT

CONTROL JOINT DETAILS

NO SCALE

LINTEL SCHEDULE

1. PROVIDE LINTELS AS SCHEDULED OVER ALL WALL OPENINGS, INCLUDING DOORS, WINDOWS, DUCTS, LOUVERS, RECESSES, PANELS AND OTHER OPENINGS, UNLESS SHOWN OR NOTED OTHERWISE ON THE STRUCTURAL DRAWINGS.
2. FOR DIMENSIONS AND LOCATIONS OF OPENINGS AS SHOWN OR REQUIRED, SEE ARCHITECTURAL, MECHANICAL & ELECTRICAL DRAWINGS.
3. ALL STEEL LINTELS IN EXTERIOR WALLS SHALL BE HOT DIPPED GALVANIZED.

NO.	TYPE	DESCRIPTION	LOCATION	CLEAR SPAN	BEARING
L-1		(2)-2"x8" WOOD JOIST W/ 1/2" PLYWD. NAILED @ 16"oc TO CREATE FLITCH BM	INTERIOR BEARING WALLS (MIN.)	VARIES TO 6'-0" MAX	3"-(2) STUDS
L-2		(3)-2"x8" WOOD JOIST W/ 1/2" PLYWD. NAILED @ 16"oc TO CREATE FLITCH BM	EXTERIOR BEARING WALLS	VARIES TO 6'-0" MAX	3"-(2) STUDS
L-3		(1)∠-5x3-1/2 x 5/16 (LLV)	WINDOWS IN BRICK VENEER & OVER HVAC SLEEVES IN BRICK	VARIES TO 6'-0" MAX	4"

COMMONWEALTH OF PENNSYLVANIA
REGISTERED PROFESSIONAL
ERIC P. JOHNSTON
ENGINEER
NO. 038220 - R

10/10/2022

REVISIONS / SUBMISSIONS
PERMIT DRAWINGS 10/7/22

JOHNSTON AND ASSOCIATES, INC
CONSULTING ENGINEERS LAND DEVELOPMENT CONSULTANTS STRUCTURAL ENGINEERS
ERIC P. JOHNSTON, P.E.
2386 TAXVILLE ROAD YORK, PA 17408
office (717) 793-9595 fax (717) 793-9606

PREDIX PROPERTIES IV, LLC
Seth Predix, Developer
815 N. GEORGE ST. SUITE 'A', YORK, PA 17404
OFFICE: 717-781-4856

STRUCTURAL PLANS & DETAILS
NEW APARTMENT BUILDING
91 S. THIRD ST., MOUNT WOLF, PA 17347
MOUNT WOLF BOROUGH, YORK COUNTY

DATE .
SCALE AS NOTED
DWN BY JACK SANDS
DESIGN BY PHIL FREY, AIA
SHEET 12 OF 15
S-1

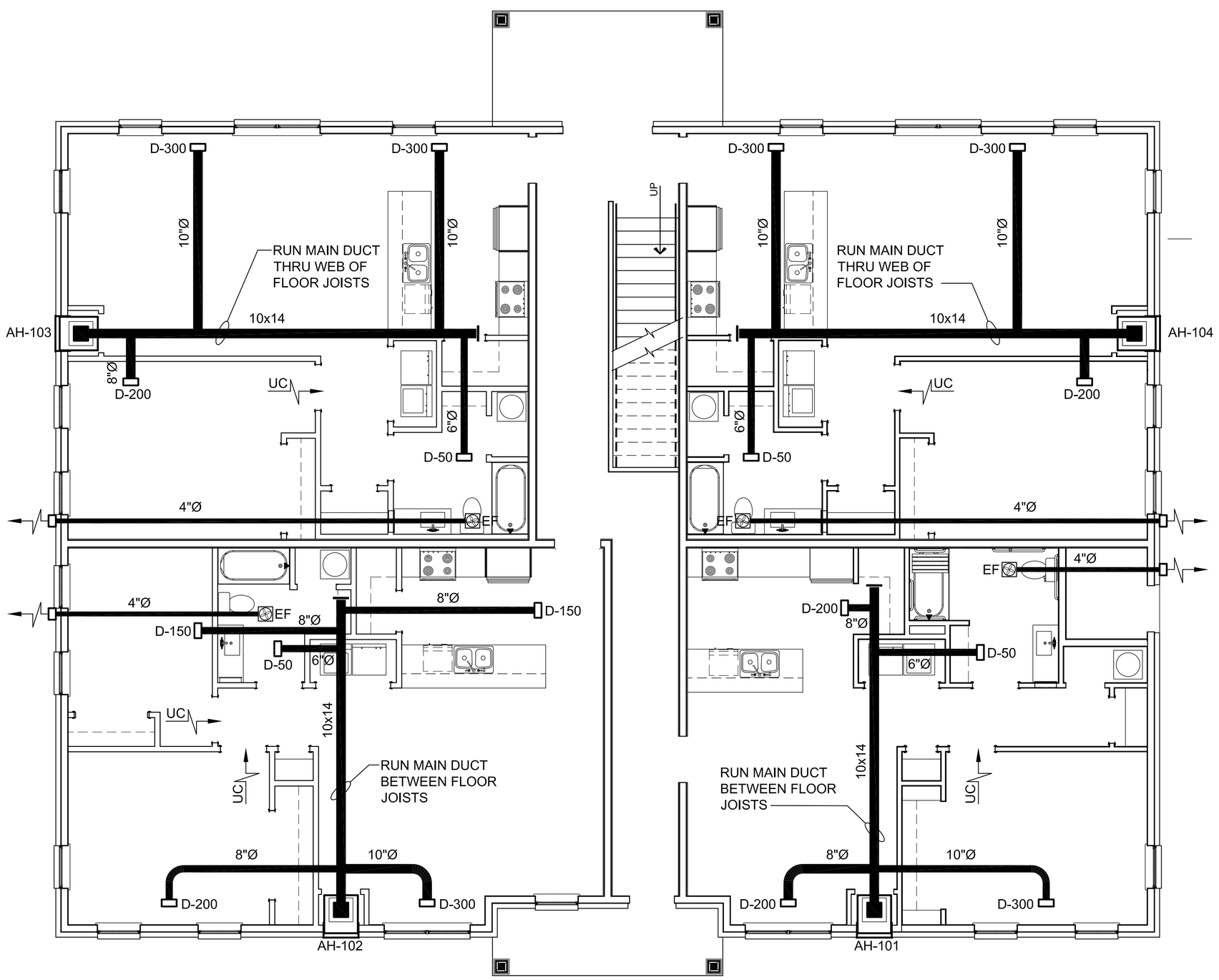

FIRST FLOOR PLAN

0 1' 2' 4' 8' 16'

3/16"=1'-0"

NORTH

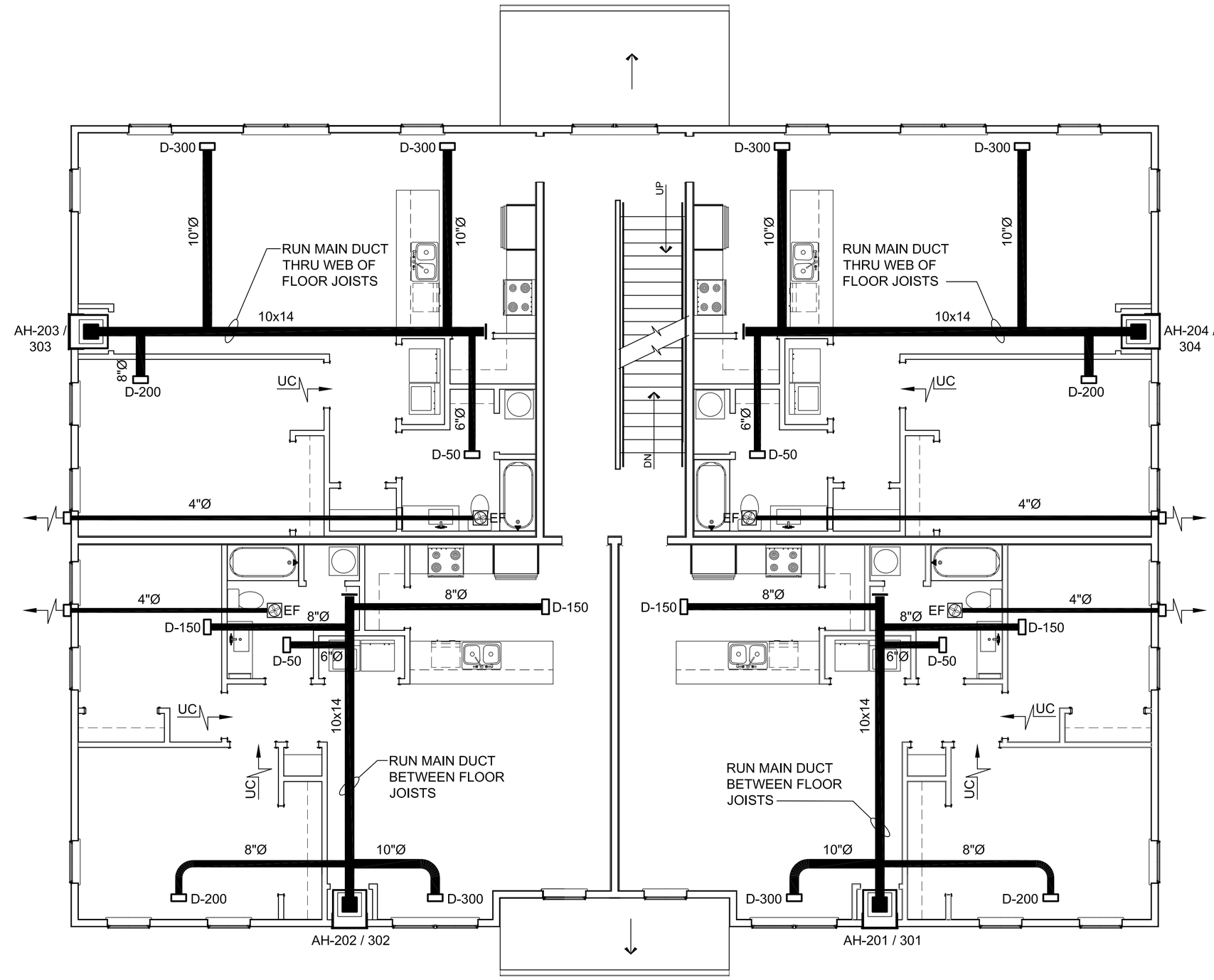

2nd & 3rd FLOOR PLAN

0 1' 2' 4' 8' 16'

3/16"=1'-0"

NORTH

DIFFUSERS

SYMBOL	CFM	SIZE	REMARKS
D-50	50	6 x 6	DIFFUSERS ARE CEILING REGISTERS AND HAVE DAMPER CONTROL
D-150	150	14 x 6	
D-200	200	18 x 8	
D-300	300	27 x 8	

AIR HANDLER SPECIFICATIONS - HVAC UNITS

NATIONAL COMFORT PRODUCTS, COMFORT PACK: THRU-THE-WALL HEATING & A/C UNIT, ADJUSTABLE 5-SPEED DC INDOOR MOTOR, SELF CONTAINED HVAC UNIT, PRECHARGED AND PREWIRED, PREPAINTED STAMPED EXTERIOR GRILLE, NOMINAL SIZE 27"W X32"D X 43"H, 305 LBS.

MODEL CPE42307-U: NOMINAL 2 COOLING TONS, COOLING 22,000 BTU @ 230V, HEATING 15,959 BTU AND 6.58 KW @ 230V, 12 SEER RATING, 850 CFM, FLOOR MOUNTED. RETURN AIR THRU LOUVERED CLOSET DOOR.

ELECTRICAL: 208-230/60/1 PHASE, COMPRESSOR 8.4 RLA, ¼ HP OUTDOOR AIR FAN MOTOR, ½ HP INDOOR AIR BLOWER MOTOR, 39.7 AMP CIRCUIT @ 230V, 40 AMP BREAKER.

EXHAUST FAN

SYMBOL	TYPE	CFM	SP	RPM	HP	VOLTAGE	OPERATING WEIGHT	ACCESSORIES	MFG / MODEL #	AREA SERVED
EF	CENT	50	.25"	900	17.6 WATTS	120V / 1Ø	15 LBS.	BIRDSCREEN, BACKDRAFT DAMPER, DISCONNECT SWITCH , BRICK VENT	GREEN HECK SP-A90 OR EQUAL	BATHROOMS

COMMONWEALTH OF PENNSYLVANIA
REGISTERED PROFESSIONAL
ERIC P. JOHNSTON
ENGINEER NO. 058220 - R

10/10/2022

MECHANICAL NOTES

1. AS REREFERENCED BY IBC, MECHANICAL WORK SHALL COMPLY WITH INTERNATIONAL MECHANICAL CODE (IMC) - 2015 AND IECC-2015. MECHANICAL PLANS ARE SCHEMATIC AND FOR GENERAL LAYOUT AND OPERATION; THE CERTIFIED MECHANICAL CONTRACTOR SHALL MEET CODE REQUIREMENTS AND COORDINATE INSPECTIONS WITH THE BUILDING OFFICIAL.
2. INSTALL HVAC EQUIPMENT, AIR HANDLERS, SUPPLY DUCTWORK, DIFFUSERS & REGISTERS, VENTILATION, EXHAUST FANS, AND THERMOSTATIC CONTROLS TO COMPLY WITH IMC. INSTALLATIONS SHALL COMPLY WITH PRODUCT MANUFACTURER WRITTEN INSTRUCTIONS. CONTRACTOR SHALL PROVIDE ALL EQUIPMENT, PRODUCTS, WORKMANSHIP, AND FIELD COORDINATION TO ACHIEVE A COMPLETE SYSTEM THAT MEETS INDUSTRY STANDARDS FOR THIS BUILDING TYPE.
3. THE SCHEMATIC EQUIPMENT SIZES & AIR DISTRIBUTION LAYOUTS ARE BASED ON RESIDENTIAL GUIDELINES. EACH APARTMENT HAS APPROXIMATELY 1.0 CFM FOR EACH SF = 850 CFM; DIVIDED BY 400-500 CFM PER TON OF A/C YIELDS 2 TON A/C UNIT.
4. DUCTWORK SHALL HAVE MINIMUM R-6 INSULATION AND IS LOCATED WITHIN THE BUILDING INSULATED ENVELOPE.
5. INSTALL DRIP PAN UNDER EACH AIR HANDLER WITH SHUTOFF SWITCH TO SHUT DOWN UNIT ON CONDENSATE DRAIN PAN OVERFLOW. RUN DRAIN LINE TO SAFE WASTE CONNECTION AT HUB DRAIN USED FOR CONDENSATE.
6. RUN AIR HANDLER SUPPLY RECTANGULAR FIBERGLASS DUCTS, WITH FLEXIBLE TUBE BRANCH DUCTS, WITH DIFFUSERS AND REGISTERS AS SHOWN.
7. MAINTAIN A MINIMUM OF 10' BETWEEN ANY EXHAUST AND AIR INTAKE OPENINGS.
8. INSTALL BALANCING DAMPERS ON ALL DIFFUSER BRANCH DUCTS.
9. AT EACH APARTMENT BATHROOM EXHAUST FAN, RUN 4" DIA. EXHAUST DUCTWORK TO OUTSIDE WALL CAP ON EACH FLOOR. EXHAUST FAN (EF-1) TO BE 50 CFM, 120V SINGLE PHASE.
10. AT EACH APARTMENT DRYER CONNECTION LOCATION, RUN 4" DIA. DRYER DUCT TO OUTSIDE WALL CAP ON EACH FLOOR.
11. OUTSIDE AIR REQUIREMENTS TO MEET IECC-2015 ARE PROVIDED BY NUMEROUS OPERABLE WINDOWS IN EACH APARTMENT.

REVISIONS / SUBMISSIONS

PERMIT DRAWINGS 10/7/22

JOHNSTON AND ASSOCIATES, INC.
CONSULTING ENGINEERS • LAND DEVELOPMENT • STRUCTURAL • MECHANICAL • ELECTRICAL • PLUMBING • FIRE PROTECTION • VENTILATION • SOLAR ENERGY
ERIC P. JOHNSTON, P.E.
2386 TAXVILLE ROAD YORK, PA 17408
office (717) 793-9595 fax (717) 793-9696

PREDIX PROPERTIES IV, LLC
Seth Predix, Developer
815 N. GEORGE ST. SUITE 'A', YORK, PA 17404
OFFICE: 717-781-4856

SCHEMATIC MECHANICAL PLANS
NEW APARTMENT BUILDING
91 S. THIRD ST., MOUNT WOLF, PA 17347
MOUNT WOLF BOROUGH, YORK COUNTY

DATE -
SCALE AS NOTED
DWN BY JACK SANDS
DESIGN BY PHIL FREY, AIA
SHEET 13 OF 15
M-1

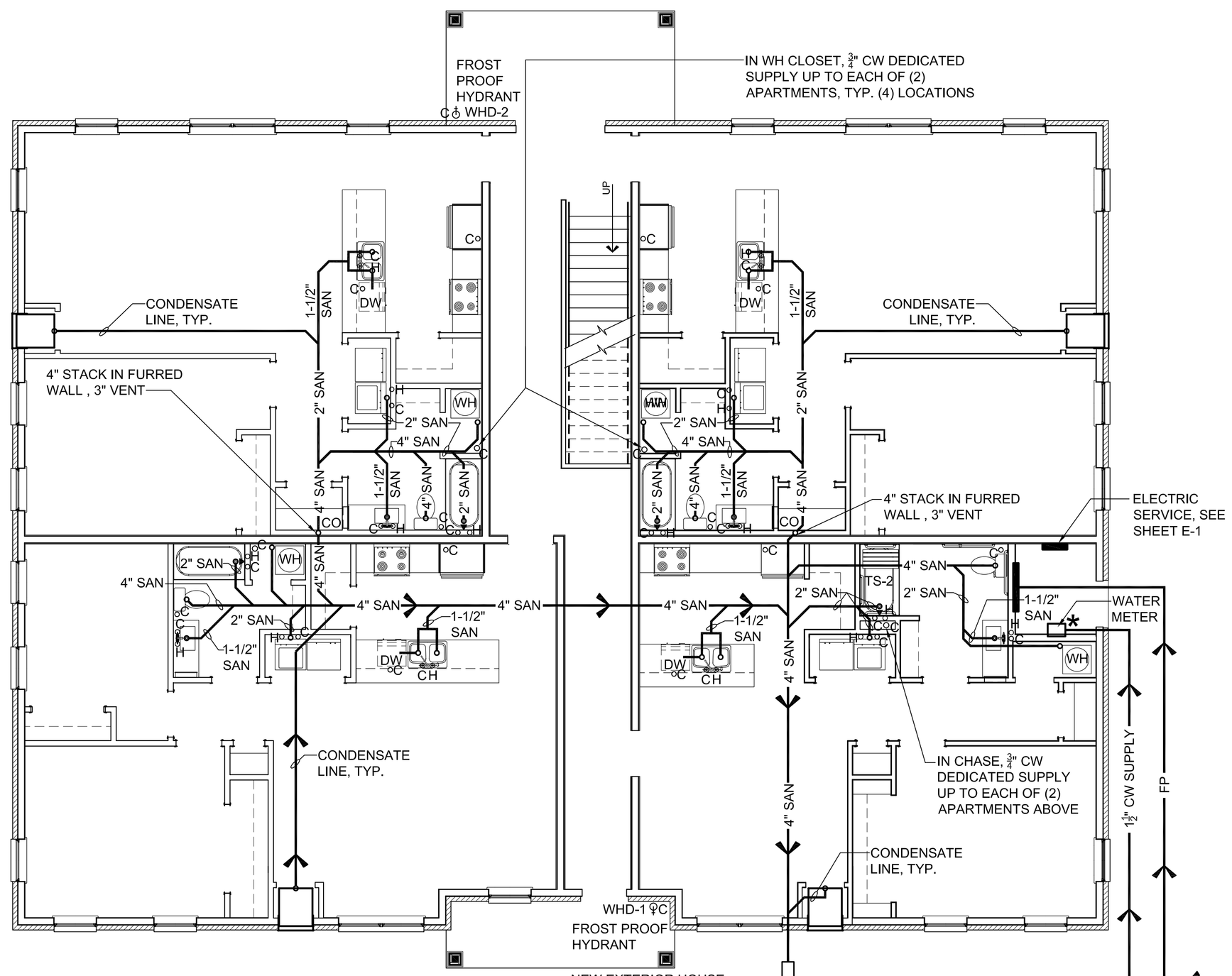

FIRST FLOOR PLAN

0 1' 2' 4' 8' 16'

3/16"=1'-0"

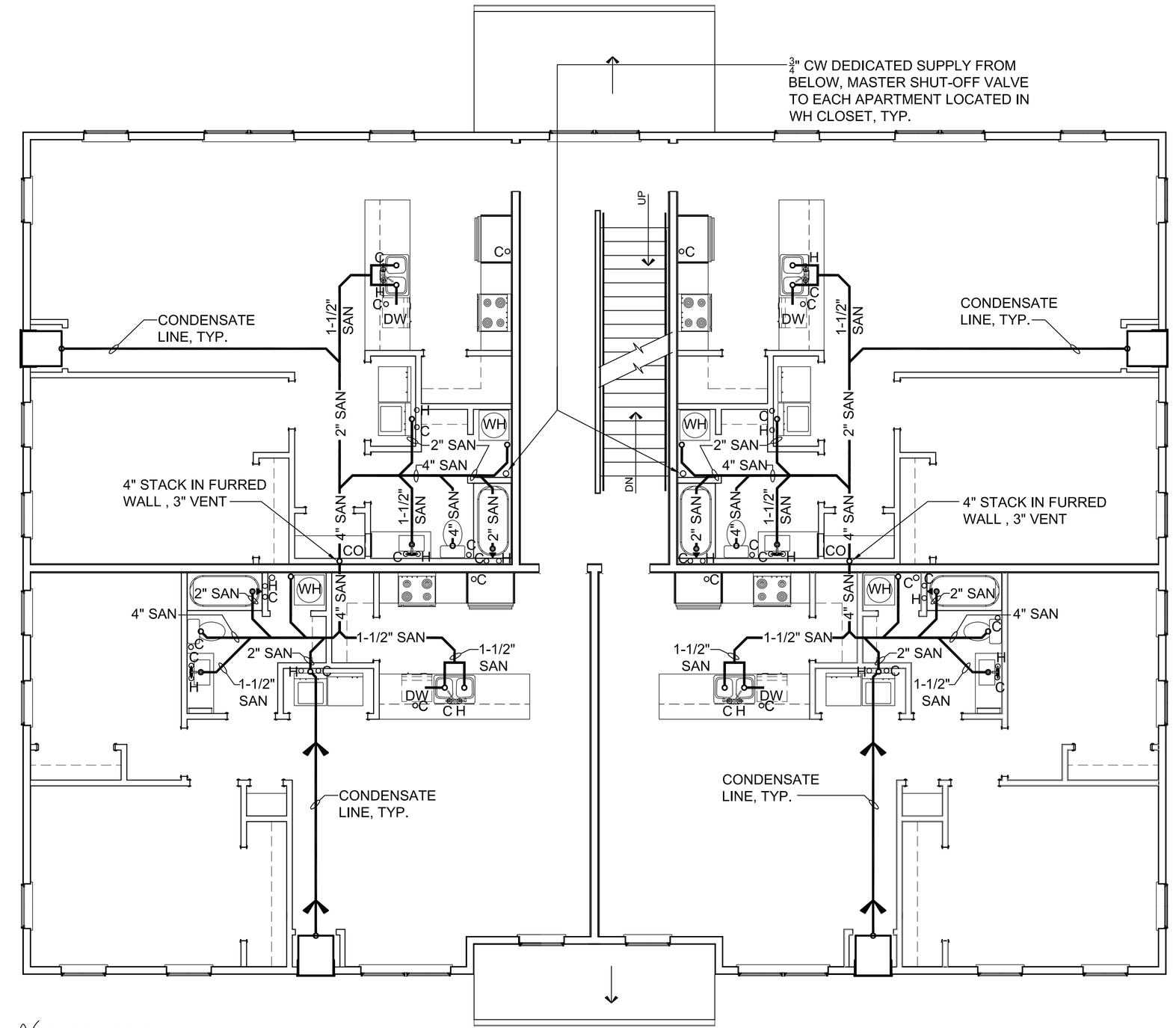

2nd & 3rd FLOOR PLAN

0 1' 2' 4' 8' 16'

3/16"=1'-0"

FP — FIRE PROTECTION

1½" CW SUPPLY — CW SUPPLY (*) FROM UTILITY ROOM, (12) CSST PVC ¾" SUPPLY PIPES UP TO APARTMENTS

4" SAN — 4" SANITARY SEWER

PIPE RUNS CONNECT TO THE UTILITY SERVICES AS PREVIOUSLY APPROVED / PROVIDED AT THE MECHANICAL ROOM OF THE ADJACENT 6-UNIT APARTMENT SCHOOL CONVERSION, PERMIT DWG. P-1, 11/23/20

PLUMBING FIXTURE SCHEDULE

SYMBOL	DESCRIPTION	WASTE	VENT	HOT	COLD	
WC-1	WATER CLOSET	4"	2"	—	1/2"	FLOOR MTD FLUSH TANK, AMERICAN STANDARD 2087.212 (WHITE), WITH BEMIS SEAT (WHITE)
TS-1	TUB / SHOWER	2"	1 1/4"	1/2"	1/2"	60x32 ENCLOSURE AND SHOWER KIT, AKER MODEL BFSH-60SD WITH AMERICAN STANDARD SHOWER VALVE SDR1662.601
TS-2	TUB / SHOWER	2"	1 1/4"	1/2"	1/2"	ANSI COMPLIANT, AKER PRODUCTS, MODEL OPTS-6032 , WITH GRAB BARS, SEAT, ADA HAND-HELD SHOWER FOR ICC TYPE 'A' DWELLING UNIT.
S-1	SINK	1 1/2"	1 1/4"	1/2"	1/2"	DOUBLE BOWL COUNTERTOP SINK, AMERICAN STANDARD 7502.103.75 WITH 4137.001 FAUCET, CONNECT WATER & DRAIN FROM DISHWASHER
DW	DISHWASHER	1 1/2"	1 1/4"	—	1/2"	TYPICALLY CONNECTED FROM KITCHEN SINK
L-1	LAVATORY	1 1/2"	1 1/4"	1/2"	1/2"	COUNTERTOP, AMERICAN STANDARD 0419.444 (WHITE) WITH AMERICAN STANDARD FAUCET 2175.504
WB-1	WASHER BOX	2"	1 1/4"	1/2"	1/2"	GUY GRAY T200 WITH SHUTOFF VALVES AND WATER HAMMER ARRESTORS; PROVIDE SAFE WASTE AIR-GAP CONNECTION
WH-1	WATER HEATER	PAN	—	3/4"	3/4"	50 GALLON ELECTRIC WATER HEATER, 240 V 1 PHASE, 4500 WATTS, RHEEM-RUDD MODEL PROE, RUN DRAIN PAN DRAIN TO HUB DRAIN ON SANITARY STACK, INSTALL WITH THERMOSTATIC MIXING VALVE, ASME RELIEF VALVE, SHUTOFF VALVES, TALL STYLE HEATER
WHD-1 WHD-2	WALL HYDRANT	—	—	—	3/4"	NON FREEZE ZURN Z1305
SERVICE	APARTMENT	—	—	—	3/4"	RUN CW DEDICATED SUPPLY & MASTER SHUT-OFF VALVE TO EACH APARTMENT
SERVICE	APARTMENT	4"	3"	—	—	CONNECT EACH APARTMENT TO A SANITARY STACK
APPROVED SUBSTITUTES ALLOWED FOR ALL PLUMBING FIXTURES, SUBMIT CATALOG CUT DATA FOR OWNERS APPROVAL						

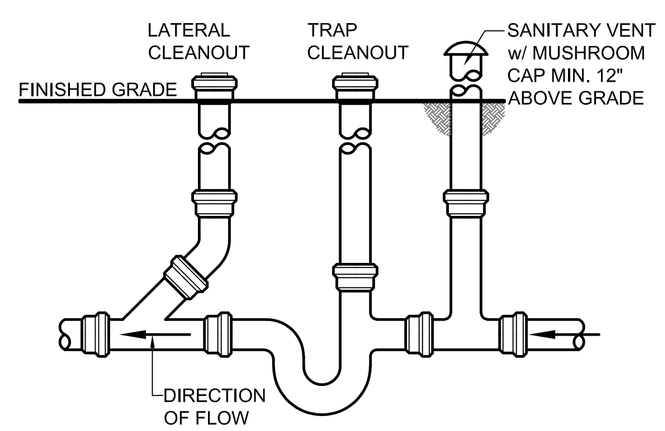

EXTERIOR HOUSE TRAP DETAIL

NO SCALE

PLUMBING NOTES

1. AS REFERENCED BY IBC, PLUMBING WORK SHALL COMPLY WITH INTERNATIONAL PLUMBING CODE (IPC) - 2015 AND IECC-2015. PLUMBING PLANS ARE SCHEMATIC AND FOR GENERAL LAYOUT AND OPERATION; THE LICENSED PLUMBING CONTRACTOR SHALL MEET CODE REQUIREMENTS AND COORDINATE INSPECTIONS WITH THE BUILDING OFFICIAL.
2. INSTALL DOMESTIC WATER PIPING, VALVES, BACKFLOW PREVENTOR, SANITARY WASTE PIPING AND VENTING, AND PLUMBING FIXTURES TO COMPLY WITH IPC. INSTALLATIONS SHALL COMPLY WITH PRODUCT MANUFACTURER WRITTEN INSTRUCTIONS. CONTRACTOR SHALL PROVIDE ALL EQUIPMENT, PRODUCTS, WORKMANSHIP, AND FIELD COORDINATION TO ACHIEVE A COMPLETE SYSTEM THAT MEETS INDUSTRY STANDARDS FOR THIS BUILDING TYPE.
3. EACH APARTMENT HAS A SEPARATE WATER SUPPLY PIPE; RISER MAY BE CSST PVC.
4. ALL SANITARY WASTE & VENT PIPING SHALL BE SCHEDULE 40 PVC PIPE AND FITTINGS. PROVIDE NO-HUB CAST IRON FITTINGS FOR PLENUM CEILING AREAS IF APPLICABLE. PROVIDE TRAPS AT ALL DRAINS.
5. DOMESTIC WATER PIPING SHALL BE TYPE "L" COPPER WITH WROUGHT COPPER SOLDER FITTINGS, SOLDER SHALL BE LEAD FREE.
6. INSULATE DOMESTIC WATER PIPING WITH 1" INSULATION PER IECC-2015.
7. PROVIDE CONTROL VALVES ON ALL BRANCH LINES, AND (1) MASTER SHUT-OFF VALVE FOR EACH APARTMENT.
8. PROVIDE TYPE AND DIRECTION OF FLOW LABELS ON ALL PIPING.
9. COORDINATE BUILDING WATER & SEWER SERVICE WITH UTILITY COMPANIES, AND PROVIDE THE REQUIRED BACKFLOW PREVENTOR AND SEWER TRAP.
10. PROVIDE CATALOG CUTS OF ALL PLUMBING FIXTURES FOR THE APPROVAL OF THE OWNER.

SPRINKLER SYSTEM NOTES

1. IBC 903.3.1.2 NFPA 13R SPRINKLER SYSTEMS: FOR GROUP R-2 RESIDENTIAL BUILDINGS 4 STORIES AND UNDER, THE ENTIRE BUILDING SHALL RECEIVE A NFPA 13R SPRINKLER SYSTEM, AND COMPLY WITH 903.4 SPRINKLER SYSTEM SUPERVISION & ALARMS. **COMPLIANCE NOTE: PROVIDE NFPA 13R SPRINKLER SYSTEM & ALARM SYSTEM THROUGHOUT; AS A "DELEGATED DESIGN" REQUIREMENT, SUBMIT SEPARATE CALCULATIONS & SHOP DRAWINGS SEALED BY A NICET CERTIFIED FIRE PROTECTION TECHNICIAN.**
2. RUN SPRINKLER SYSTEM PIPING CONCEALED THROUGHOUT.
3. REFER TO SHEET A-2.1 & A-2.2, BUILDING CODE NOTES, FOR MORE REQUIREMENTS.

10/10/2022

COMMONWEALTH OF PENNSYLVANIA — REGISTERED PROFESSIONAL — ERIC P. JOHNSTON — ENGINEER NO. 038220 - R

REVISIONS / SUBMISSIONS

PERMIT DRAWINGS 10/7/22

JOHNSTON AND ASSOCIATES, INC.
CONSULTING ENGINEERS • LATEST SUPPORTED SOFTWARE • RELIABLE SERVICES
ERIC P. JOHNSTON, P.E.
2386 TAXVILLE ROAD YORK, PA 17408
office (717) 793-9595 fax (717) 793-8606

PREDIX PROPERTIES IV, LLC
Seth Predix, Developer
815 N. GEORGE ST. SUITE 'A', YORK, PA 17404
OFFICE: 717-781-4856

SCHEMATIC PLUMBING PLANS
NEW APARTMENT BUILDING
91 S. THIRD ST., MOUNT WOLF, PA 17347
MOUNT WOLF BOROUGH, YORK COUNTY

DATE -
SCALE AS NOTED
DWN BY JACK SANDS
DESIGN BY PHIL FREY, AIA
SHEET 14 OF 15

P-1

(12) ELECTRICAL CONDUITS (ONE FOR EACH APARTMENT) FROM 200 AMP GROUP METERING AT EXISTING BUILDING, (1) CONDUIT FROM EXISTING BUILDING TO SERVE THE 100 AMP NEW PANEL PNL-1; SEE PERMIT DRAWING E-1, DATED 11/23/20 FROM THE PREVIOUSLY APPROVED (PROVIDED) ADJACENT 6- UNIT APARTMENT SCHOOL CONVERSION.

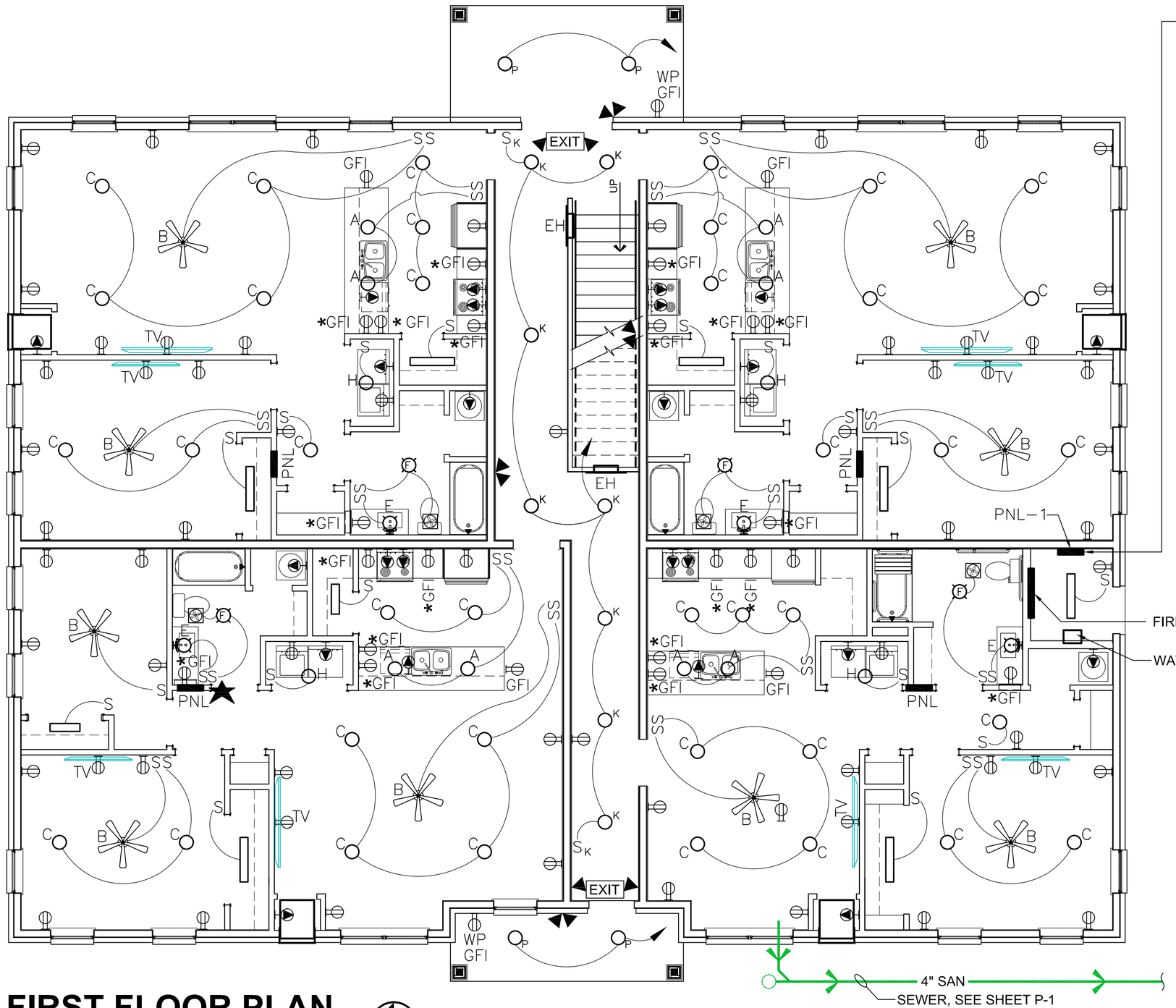

FIRST FLOOR PLAN

0 1' 2' 4' 8' 16'

3/16"=1'-0"

NORTH

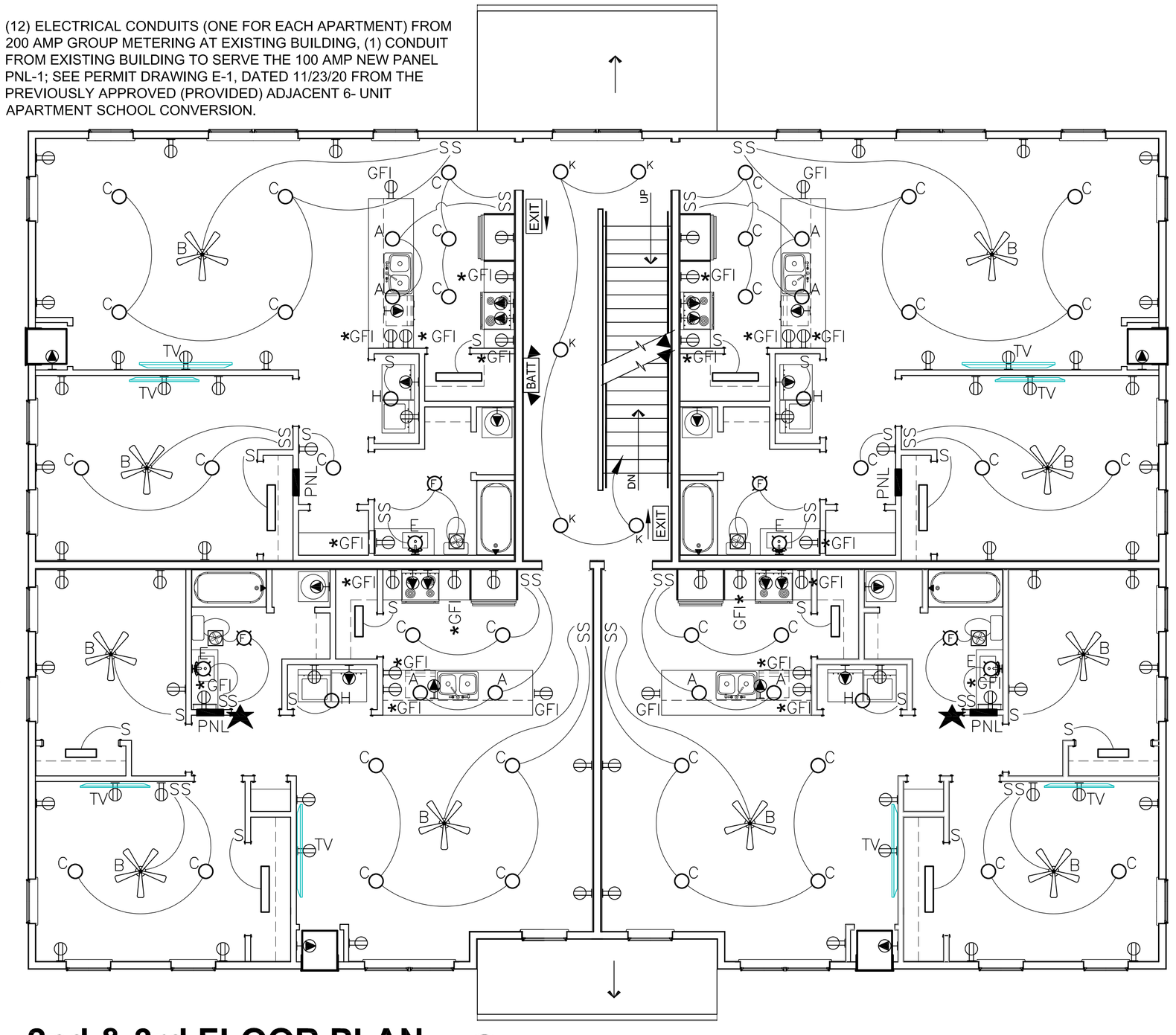

2nd & 3rd FLOOR PLAN

0 1' 2' 4' 8' 16'

3/16"=1'-0"

NORTH

★ NOTE: WHERE RECESSED ELECTRICAL PANEL (PNL) IS LOCATED BEHIND THE MEDICINE CABINET, THE MEDICINE CABINET SHALL BE SURFACE MOUNTED WITH A WOOD FRAME.

COMMONWEALTH OF PENNSYLVANIA REGISTERED PROFESSIONAL ENGINEER ERIC P. JOHNSTON NO. 058220 - R

10/10/2022

ELECTRICAL LEGEND

- LED PENDANT (KIT. ISLAND)
- CEILING FAN w/ LIGHT KIT, SURFACE MTD, 120V (LIV / BEDROOM)
- LED RECESSED, 120V (GENERAL)
- LED STRIP LIGHT, SURFACE MTD, 120V (CLOSET)
- HAMPTON BAY # EW554CH WALL MTD, 120V (VANITY)
- LED SURFACE MTD, 120V (BATH)
- LED RECESSED, 50W, R20 BULB,120V (LAUNDRY)
- LED WALL MTD, 120V (SCONCE) N/A
- LED GLOBE, SURFACE MTD, (STAIR)
- TYPE 'P' EXTERIOR LIGHT FIXTURE
- EXHAUST FAN, NUTONE #686, RECESSED MTD, 120V
- S SINGLE POLE TOGGLE SWITCH
- S3 THREE-WAY TOGGLE SWITCH
- SK KEY SWITCH
- ELECTRICAL PANEL (PNL)
- HW HOT WATER HEATER, 50 GAL., 4500 W.
- DISCONNECT SWITCH w/ WEATHERPROOF ENCLOSURE
- REMOTE DOUBLE EMERGENCY LIGHT
- EMERGENCY EXIT & LIGHT BATTERY PACK (DIRECTIONAL ARROWS AS INDICATED)
- EMERGENCY LIGHT BATTERY PACK
- DUPLEX RECEPTACLE, 20A., 125V., 1 PHASE, 2 POLE, 3 WIRE GROUNDING
- DUPLEX RECEPT.,WEATHERPROOF, GROUND FAULT INTERRUPTER
- DUPLEX RECEPT., GROUND FAULT INTERRUPTER MTD AT COUNTER HGT
- DUPLEX RECEPT. MTD AT 42" AFF
- DATA OUTLET w/ EMPTY CONDUIT TO BUILDING UTILITY ROOM. DUPLEX RECEPT. MTD AT 42" AFF
- DEDICATED CIRCUIT, DISHWASHER, WATER HEATER, HVAC UNIT, DRYER, RANGE, MICROWAVE IN UPPER CAB'S
- OCCUPANCY SENSOR, CEILING MTD.
- ELECTRIC HEATER RECESSED IN WALL

TYPICAL APARTMENT PANEL SCHEDULE

DESIGNATION: PNL TYPICAL FOR ALL 12 APARTMENTS
RATING: 100 AMPS MAIN CIRCUIT BREAKER, 120/240V, SINGLE PHASE, FOUR WIRE, ALUMINUM BUS.
SPACES / CIRCUITS: 20
MINIMUM SHORT CIRCUIT RATING: 1OK.A1C

CKT. NO.	SERVICE	BRK. AMP	POLES A & B	BRK. AMP	SERVICE	CKT. NO.
1	LIGHTS - LIV & DIN	20	BALANCING OF AMP LOADS TO BE CONFIGURED BY ELECTRICAN	20	RECEPT. - LIV & DIN	2
3	LIGHTS - BEDROOMS	20		20	RECEPT. - BR. #1	4
5	LIGHTS - KIT, BATH,EXHAUST	20		20	RECEPT. - BR. #2	6
7	DISHWASHER & KITCHEN RECEPT, GFCI	20		20	REFRIG. & KITCHEN RECEPT, GFCI	8
9	MICRO, WASHER, BATH RECEPT, GFCI	20		40	RANGE	10
11	HOT WATER HEATER	30		30	DRYER	12
13	HVAC AIR HANDLER - INSIDE UNIT	40		20	SPARE	14
15	SPARE	20		20	SPARE	16
17	----------				----------	18
19	----------				----------	20

BUILDING ELECTRICAL PANEL SCHEDULE

DESIGNATION: PNL-1
RATING: 200 AMPS MAIN CIRCUIT BREAKER, 120/240V, SINGLE PHASE, FOUR WIRE, ALUMINUM BUS.
SPACES / CIRCUITS: 20
MINIMUM SHORT CIRCUIT RATING: 1OK.A1C

CKT. NO.	SERVICE	BRK. AMP	POLES A & B	BRK. AMP	SERVICE	CKT. NO.
1	EMERGENCY LIGHT	20	BALANCING OF AMP LOADS TO BE CONFIGURED BY ELECTRICAN	40	UNIT HEATER	2
3	EMERGENCY LIGHT	20				
5	LIGHTS - STAIRWAY	20		40	UNIT HEATER	4
7	LIGHTS - STAIR, ENTRY, FIRST FLOOR	20				
9	LIGHTS - PORCHES	20		20	RECEPT. - STAIRWAY	6
11	SPARE	20		20	RECEPT. - EXTERIOR	8
13	----------			20	SPARE	10
15	----------					12
17	----------					14
						16
						18
						20

ELECTRICAL NOTES

1. AS REFERENCED BY IBC, NEW ELECTRICAL WORK SHALL COMPLY WITH NFPA 70 - 2014, NATIONAL ELECTRICAL CODE (NEC) AND IECC-2015. ELECTRICAL PLANS ARE SCHEMATIC AND FOR GENERAL LAYOUT AND OPERATION; THE LICENSED ELECTRICAL CONTRACTOR SHALL MEET CODE REQUIREMENTS AND COORDINATE INSPECTIONS WITH THE BUILDING OFFICIAL.
2. WIRING & POWER LOADS, PANEL SCHEDULES, DISTIBUTION METHODS, LIGHTING, SWITCHING, AND POWER OUTLETS SHALL COMPLY WITH NEC. INSTALLATIONS SHALL COMPLY WITH PRODUCT MANUFACTURER WRITTEN INSTRUCTIONS. CONTRACTOR SHALL PROVIDE ALL EQUIPMENT, PRODUCTS, WORKMANSHIP, AND FIELD COORDINATION TO ACHIEVE A COMPLETE SYSTEM THAT MEETS INDUSTRY STANDARDS FOR THIS BUILDING TYPE.
3. EACH APARTMENT HAS A SEPARATE LOAD CENTER, SUPPLIED FROM A SEPARATE METER BASE.
4. LED FIXTURES ARE TYPICAL THROUGHOUT.
5. ALL WIRING SHALL BE RATED 600 VOLTS.
6. MINIMUM CONDUCTOR SIZE SHALL BE #12.
7. ALL DEVICES SHALL HAVE A MINIMUM RATING OF 20 AMPS.
8. ALL EXTERIOR RECEPTACLES TO BE GFCI WEATHER RESISTANT AND WEATHER PROOF IN ACCORDANCE WITH NEC 406.9 A & B.
9. PROVIDE A 120V CONVENIENCE RECEPTACLE OUTLET WITHIN 25' OF HVAC UNITS PER NEC 210.63.
10. ALL INTERIOR CONDUIT SHALL BE IN EMT CONDUIT OR MC CABLE.
11. BRANCH CIRCUIT WIRING SHALL BE THHN CU WIRING.
12. SUB-PANEL FEEDS SHALL BE XHHW ALUMINUM WIRE.
13. ALL FIREWALL PENETRATIONS SHALL BE SEALED TO ORIGINAL RATING.
14. ALL FIXTURES AND DEVISES SHALL BE UL RATED.
15. ALL POWER BRANCH CIRCUITS SHALL INCLUDE A GROUNDING CONDUCTOR SIZED PER NEC TABLE 250-122. MINIMUM #12 AWG.
16. TYPICAL MOUNTING HEIGHTS FROM FINISHED FLOOR OR GRADE TO CENTERLINE OF BOX: LIGHT SWITCHES 46" AFF; OUTLETS 18" AFF; CONTROL PANELS, DISCONNECT SWITCHES, PANEL BOARDS, 4'-6" NOMINAL WITH TOP OF EQUIPMENT AT 6'-6" MAX.
17. EQUIPMENT RATING, RACEWAY AND INSTALLATION SHALL MEET THE FOLLOWING CLASSIFICATION REQUIREMENTS:
    BELOW SLAB CONDUIT - SCHEDULE 40 PVC. ¾" MIN;
    BUILDING INTERIOR LOCATIONS - ENCLOSURES NEMA-1, CONDUIT EMT ¾" MIN. AND/OR MC CABLE;
    BUILDING EXTERIOR LOCATIONS - ENCLOSURES NEMA-3R, CONDUIT IMC ¾" MIN. AND/OR SCHEDULE 40 PVC ¾" MIN.
18. CONDUIT SHALL BE SIZED IN ACCORDANCE WITH NEC ANNEX C.
19. RECEPTACLE COVERS SHALL BE SELECTED BY OWNER.

REVISIONS / SUBMISSIONS

PERMIT DRAWINGS 10/7/22

JOHNSTON AND ASSOCIATES, INC.
CONSULTING ENGINEERS - LAND DEVELOPMENT CONSULTANTS - SURVEYS & ESTIMATORS
ERIC P. JOHNSTON, P.E.
2386 TAXVILLE ROAD YORK, PA 17408
office (717) 793-9595 fax (717) 793-9696

PREDIX PROPERTIES IV, LLC
Seth Predix, Developer
815 N. GEORGE ST. SUITE 'A', YORK, PA 17404
OFFICE: 717-781-4856

SCHEMATIC ELECTRICAL PLANS
NEW APARTMENT BUILDING
91 S. THIRD ST., MOUNT WOLF, PA 17347
MOUNT WOLF BOROUGH, YORK COUNTY

DATE -
SCALE AS NOTED
DWN BY JACK SANDS
DESIGN BY PHIL FREY, AIA
SHEET 15 OF 15

E-1