POWER DEVICES

	SINGLE RECEPTACLE
	DUPLEX RECEPTACLE
	FOURPLEX RECEPTACLE
A	SPECIAL RECEPTACLES (LETTER NEXT TO DEVICE IS A RECEPTACLE MODIFIER)
	DUPLEX DEDICATED RECEPTACLE
TV	TV DUPLEX RECEPTACLE MOUNTED AT 18" AFF
	COMBINATION DUPLEX/USB RECEPTACLE
	FLOOR MOUNTED DUPLEX RECEPTACLE
	FLOOR MOUNTED FOURPLEX RECEPTACLE
	CEILING MOUNTED DUPLEX OUTLET
J	JUNCTION BOX
	SURFACE RACEWAY
	DIMMER
	SINGLE POLE TOGGLE SWITCH
K	SINGLE POLE KEYED TOGGLE SWITCH
3	THREE WAY TOGGLE SWITCH (LOWER CASE LETTERS DENOTES SWITCHING)
3 K	THREE WAY KEYED TOGGLE SWITCH
	GANG LIGHT SWITCH
TO	SINGLE POLE THERMAL OVERLOAD SWITCH (P DENOTES PILOT LIGHT)
	CEILING MOUNTED MOTION SENSOR SWITCH
	WALL MOUNTED MOTION SENSOR SWITCH

LIGHTING

	2' x 4' FLUORESCENT FIXTURE
	RECESSED DOWNLIGHT
	RECESSED WALL WASHER
	1' x 4' FLUORESCENT FIXTURE
	SURFACE MOUNTED DOWNLIGHT OR GROUND MOUNTED LANDSCAPE LIGHT
	STRIP LIGHT WITH JUNCTION BOX
	WALL MOUNTED FIXTURE
	PENDANT
	TRACK LIGHT WITH HEADS
	WALL MOUNTED FIXTURE
	SURFACE OR PENDANT MOUNTED LINEAR FIXTURE
	EXIT LIGHT
	EMERGENCY BATTERY-PACK
	FIXTURES SHADED OR MAKED "EM" ARE EMERGENCY FIXTURES.

EQUIPMENT

	DISCONNECT SWITCH
	FUSED DISCONNECT SWITCH
	COMBINATION MOTOR STARTER
	MOTOR
	ELECTRICAL PANEL
M	METER
	GROUND
	FUSE & SWITCH
	CIRCUIT BREAKER
GFI	GROUND FAULT INTERUPTER BREAKER
	MECHANICAL EQUIPMENT IDENTIFICATION TAG
T	TRANSFORMER
XXXX	ELECTRICAL PANEL

RACEWAY LEGEND

A–2,4	BRANCH CIRCUIT HOMERUN TO PANELBOARD INDICATED. NUMBER OF ARROWS INDICATES NUMBER OF UNGROUNDED CONDUCTORS WHICH EACH REQUIRING A SEPERATE NEUTRAL.
	CONDUIT UP
	CONDUIT DOWN
	CONDUIT RUNS UNDERFLOOR OR BELOW GRADE
	CONDUIT RUN CONCEALED IN WALLS OR CEILING , OR EXPOSED WHEN CEILINGS ARE NOT PRESENT.
	MOTOR CONNECTION

COMMUNICATIONS

	DATA OUTLET
	TELEPHONE OUTLET
	COMBINATION TELE/DATA OUTLET
	TELEPHONE BACKBOARD

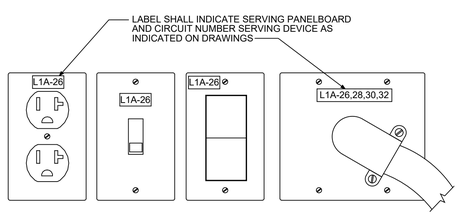

TYPICAL DEVICE COVERPLATE IDENTIFICATION

SCALENO SCALE

LABELS SHALL INDICATE SERVING BRANCH CIRCUIT PANELBOARD AS NOTED ON THE DRAWINGS AS WELL AS BRANCH CIRCUIT SERVING DEVICE. EX. "L1A-26" INDICATES PANEL L1A, CIRCUIT 26.

LABELS SHALL BE SELF-ADHESIVE TYPE, DYMO LABELS OR APPROVED EQUAL WITH MIN. 1/8" HIGH LETTERS

VERIFY WITH BUILDING ENGINEER WHICH OF THE ABOVE PRACTICES IS ACCEPTABLE.

PROVIDE BUILDING STANDARD DEVICES UNLESS OTHERWISE DIRECTED BY ARCHITECT, DEVICES ARE SHOWN AS EXAMPLES ONLY.

DESIGN AND INSTALL SHALL COMPLY WITH 2023 NEC AND 2021 IECC REQUIREMENTS.

TRUE NORTH PROJECT NORTH

Clic. DESIGN STUDIO

50 SOUTH STEELE STREET, DENVER, CO 80209

FOUNDERS + PRINCIPALS
RENE STREMEL | 303.437.4956 | RENE@CLICDESIGNSTUDIO.COM
SARAH MCGARRY | 303.915.4314 | SARAH@CLICDESIGNSTUDIO.COM

© COPYRIGHT 2022
ANY UNAUTHORIZED USE OF THESE DOCUMENTS IS PROHIBITED WITHOUT THE WRITTEN CONSENT OF CLIC DESIGN STUDIO.

CMTA A LEGENCE Company formerly KLOK Group

NOT FOR CONSTRUCTION

THRIVING FAMILIES
191 Yuma St, Denver CO, 80223

ISSUANCE:	DATE
FOR CONSTRUCTION	2024.04.10

REVISION	DATE

PROJECT NUMBER: 20XXX

SHEET TITLE: ELECTRICAL LEGEND

SHEET NUMBER: E0.00

ELECTRICAL SPECIFICATIONS

1. GENERAL REQUIREMENTS

A. ALL WORK SHALL BE PERFORMED IN ACCORDANCE WITH THE GENERAL CONDITIONS OF THE CONTRACT FOR CONSTRUCTION.

B. CONTRACTOR SHALL BE HELD RESPONSIBLE FOR VERIFICATION OF EXISTING JOB CONDITIONS PRIOR TO BID. NO ADDITIONAL COSTS SHALL BE AWARDED TO THE SUCCESSFUL CONTRACTOR OR THEIR SUBCONTRACTORS, AFTER BIDS HAVE BEEN SUBMITTED AND CONTRACTS AWARDED, FOR FAILURE TO VERIFY EXISTING JOB CONDITIONS. ANY DISCREPANCIES BETWEEN ACTUAL FIELD CONDITIONS AND CONTRACT DOCUMENTS SHALL BE BROUGHT TO THE ENGINEER'S ATTENTION FOR ALTERNATIVE METHODS OF INSTALLATION (3) DAYS MINIMUM PRIOR TO BIDDING OF JOB, TO ALLOW FOR ISSUANCE OF CLARIFICATIONS.

C. THE CONTRACTOR SHALL VISIT AND INSPECT THE SITE AND SHALL ASCERTAIN CONDITIONS UNDER WHICH THE WORK MUST BE PERFORMED INCLUDING THE HANDLING OF MATERIALS, SECURITY AND LIMITING FIELD DIMENSIONS. ANY ADDITIONAL COSTS RESULTING FROM CONTRACTOR'S FAILURE TO DO SO SHALL BE CONTRACTOR'S RESPONSIBILITY AND SHALL BE CONTRACTOR'S RESPONSIBILITY.

D. ELECTRICAL CONTRACTOR SHALL VISIT SITE AND EXAMINE DRAWINGS OF OTHER TRADES ON THIS PROJECT, PARTICULARLY DEMOLITION, ARCHITECTURAL AND MECHANICAL, TO DETERMINE ANY ADDITIONAL WORK THAT MAY BE REQUIRED FOR A COMPLETE AND OPERATIONAL ELECTRICAL INSTALLATION AND SHALL INCLUDE AN ALLOWANCE FOR THIS WORK IN THEIR BID.

E. ALL WORK SHALL BE DONE IN COMPLIANCE WITH ALL NATIONAL CODES, INCLUDING THE NEC, NFPA, IBC, IECC AND ALL APPLICABLE LOCAL CODES AND ORDINANCES, AND OTHER AUTHORITIES HAVING JURISDICTION OVER ELECTRICAL CONSTRUCTION WORK AND THE PROJECT. FILE PLANS WITH AND OBTAIN APPROVALS FROM MUNICIPAL AGENCIES. ALL REQUIRED PERMITS AND CERTIFICATIONS OF INSPECTION SHALL BE OBTAINED AND PAID FOR BY THE CONTRACTOR AND PERTINENT CERTIFICATES SHALL BE DELIVERED TO THE TENANT'S REPRESENTATIVE BEFORE FINAL BILLING.

F. TENANT REGULATIONS

(1) ALL WORK SHALL BE IN COMPLIANCE WITH ALL BUILDING REGULATIONS. IT SHALL BE THE RESPONSIBILITY OF THE CONTRACTOR TO OBTAIN FROM THE BUILDING MANAGER A COPY OF ALL BUILDING RULES AND REGULATIONS. CONTRACTOR SHALL INCLUDE ALL COSTS ASSOCIATED WITH COMPLYING WITH SUCH REGULATIONS IN THEIR BID.

(2) ALL WORK SHALL BE DONE IN COMPLIANCE WITH THE FINISH SPECIFICATIONS (ELECTRICAL CONTRACTOR SHALL VERIFY IF SPECIFICATIONS ARE AVAILABLE IN THE MANAGEMENT OFFICE), DRAWINGS, AND LATEST REVISIONS ON CONTRACT DOCUMENTS FOR ELECTRICAL WORK. ENSURE ALL NEW EQUIPMENT IS PROVIDED AND INSTALLED PER BUILDING STANDARD REQUIREMENTS.

(3) THE CONTRACTOR SHALL NOT DRILL HOLES INTO EXISTING SLABS OR STRUCTURAL MEMBERS FOR THE PURPOSE OF SUPPORTING ANY LOADS, OR ROUTING ANY FEEDERS, UNLESS WRITTEN APPROVAL IS OBTAINED FROM ENGINEER.

(4) THE CONTRACTOR SHALL REPAIR OR REPLACE EXISTING CONSTRUCTION DAMAGED IN THE PERFORMANCE OF THIS CONTRACT.

G. SHOP DRAWINGS

(1) SUBMIT "SHOP DRAWINGS" AND "SAMPLES" FOR REVIEW. SHOP DRAWINGS SUBMITTAL SHALL INCLUDE DIMENSIONS, THICKNESS, PROFILES, TYPE OF MATERIAL, METHOD OF FASTENING, RELATION TO ADJACENT WORK AND ALL OTHER NECESSARY DETAILS TO FULLY DESCRIBE THE ITEM SUBMITTED. ALL SHOP DRAWINGS AND CUTS WILL BE SIGNED "REVIEWED" FOR DESIGN APPEARANCE ONLY. THE CONTRACTOR SHALL ASSUME ALL RESPONSIBILITY FOR ERRORS ON THEIR DRAWINGS.

(2) WHERE THE TERM "OR EQUIVALENT" IS USED, IT SHALL BE UNDERSTOOD THAT THE REFERENCE IS MADE TO THE RULING AND JUDGEMENT OF THE ENGINEER AND SHALL BE SUBMITTED TO THE ENGINEER FOR REVIEW. SUBMIT ACTUAL SAMPLES OF ALL SUBSTITUTIONS.

(3) THE CONTRACTOR SHALL REVIEW ALL SUBMITTALS FOR CONFORMANCE WITH CONTRACT DOCUMENTS PRIOR TO SUBMITTING TO ENGINEER. CONTRACTOR SHALL PROVIDE A WRITTEN STATEMENT WITH SUBMITTAL STATING THAT SUCH A REVIEW HAS BEEN MADE. ALL SUBMITTALS MADE WITHOUT SUCH A STATEMENT SHALL BE RETURNED UNREVIEWED.

(4) CONTRACTOR TO CONFIRM DEFERRED SUBMITTALS WITH ARCHITECT, OWNER AND GENERAL CONTRACTOR. ALL APPROVED DEFERRED SUBMITTALS SHALL BE REVIEWED AND COORDINATED WITH CONTRACT DRAWINGS PRIOR TO PROCUREMENT AND ROUGH-IN.

H. LEAVE WORK READILY ACCESSIBLE FOR OPERATION, MAINTENANCE AND REPAIR. PROVIDE ACCESS HATCHES AS REQUIRED.

I. MAINTAIN A FIELD REPRESENTATIVE ON THE PREMISES AT ALL TIMES DURING THE COURSE OF THE CONSTRUCTION WORK.

J. COORDINATE SEQUENCE OF WORK WITH ALL OTHER TRADES

K. NO REMOVALS SHALL BE MADE WITHOUT ARCHITECT'S OR ENGINEER'S APPROVAL. ALL EXISTING DEMOLISHED EQUIPMENT, MATERIALS, ETC., NOT REQUIRED TO BE INCORPORATED BACK INTO THE NEW WORK SHALL BE REMOVED AND DISPOSED OF BY THIS CONTRACTOR, UNLESS OTHERWISE NOTED.

L. THIS CONTRACTOR SHALL MAKE ALL NECESSARY PROVISIONS TO BRING THE ELECTRICAL AND COMMUNICATION SERVICES TO THE SPACE AND SHALL PROVIDE A SYSTEM OF TEMPORARY LIGHTING AND POWER OUTLETS FOR THEIR WORK AND THE WORK OF OTHER TRADES AND SHALL REMOVE ALL TEMPORARY WORK PRIOR TO THE COMPLETION OF THE JOB.

M. THE CONTRACTOR SHALL SUPPLY ALL EQUIPMENT, LABOR SERVICES AND MATERIALS REQUIRED FOR THE COMPLETE INSTALLATION OF THE LIGHTING, POWER AND COMMUNICATION SYSTEMS SHOWN IN THE DRAWINGS AND HEREIN SPECIFIED. ALL MATERIALS SHALL BE NEW AND OF THE HIGHEST QUALITY AVAILABLE AND SHALL BEAR THE UNDERWRITER'S LABORATORY OR APPROVE LISTING AGENCY LABEL.

N. ALL WIRING, INCLUDING LOW VOLTAGE SIGNAL AND TELEPHONE, SHALL BE INSTALLED IN CONDUIT. UL APPROVED PLENUM CABLE MAY BE USED WITHOUT CONDUIT WHERE CONCEALED AND IF ACCEPTABLE TO BOTH LOCAL AUTHORITIES HAVING JURISDICTION AND THE OWNER.

O. IT IS THE INTENT OF THIS SPECIFICATION THAT CONTINUITY OF ELECTRICAL SERVICE BE MAINTAINED. ALL REQUIRED SHUTDOWNS SHALL BE COORDINATED IN ADVANCE WITH THE OWNER AND SHALL BE SCHEDULED OUTSIDE NORMAL WORKING HOURS. CONTRACTOR SHALL INCLUDE ALL PREMIUM TIME COSTS FOR SUCH SHUTDOWNS IN HIS BID.

(1) WHEN INSTALLATION OF A NEW SYSTEM REQUIRES THE TEMPORARY SHUTDOWN OF AN EXISTING OPERATING SYSTEM, THE CONNECTION OF THE NEW SYSTEM SHALL BE PERFORMED AT SUCH TIME AS DESIGNATED BY THE OWNER.

(2) THE OWNER SHALL BE NOTIFIED OF THE ESTIMATED DURATION OF THE SHUTDOWN PERIOD TWO WEEKS IN ADVANCE OF THE DATE THE WORK IS TO BE PERFORMED.

(3) WORK SHALL BE ARRANGED FOR CONTINUOUS PERFORMANCE, INCLUDING OVERTIME, AT NO EXTRA COST TO THE OWNER TO ASSURE THAT EXISTING OPERATING SERVICES WILL BE SHUT DOWN ONLY DURING THE TIME ACTUALLY REQUIRED TO MAKE NECESSARY CONNECTIONS.

P. VERIFY SOURCE OF POWER TO ALL EQUIPMENT WITH BUILDING MANAGEMENT PRIOR TO INSTALLATION.

Q. THE CONTRACTOR, BEFORE FINAL ACCEPTANCE WILL BE GRANTED, SHALL CLEAN ALL LIGHTING FIXTURES, DEVICE PLATES, SERVICE FITTINGS, AND OTHER ITEMS FURNISHED UNDER THIS CONTRACT. CONTRACTOR SHALL ENSURE THAT ALL DIRECTORIES ARE IN PLACE WITH COMPLETED SCHEDULES, PANELBOARDS ARE VACUUMED AND ALL IDENTIFICATIONS AND MARKINGS OF EQUIPMENT, CABLES, AND OTHER ITEMS ARE COMPLETED.

R. ALL AREAS AFFECTED BY THIS REMODEL MUST BE LEFT CLEAN. ALL CEILING TILES MUST BE CLEAN, UNDAMAGED AND IN PLACE.

S. AS-BUILT DRAWINGS

(1) THE CONTRACTOR AND EACH SUBCONTRACTOR SHALL MAINTAIN AN ACCURATE RECORD OF ALL WORK AS ACTUALLY INSTALLED. THE RECORD SET SHALL BE AVAILABLE AT THE SITE AT ALL TIMES.

[NOTE TO SPEC WRITER: SELECT APPROPRIATE PARTY.]

(2) AT CONCLUSION OF WORK, SUBMIT ORIGINAL LEGIBLE REPRODUCIBLE COPY ALONG WITH AN ELECTRONIC FILE REFLECTING AS-BUILT CONDITION TO ELECTRICAL ENGINEER OF RECORD AND SUBMIT TO BUILDING MANAGEMENT/ TENANT.

T. GUARANTEES

(1) CONTRACTOR SHALL GUARANTEE ALL WORK AND MATERIALS FOR A PERIOD OF ONE YEAR AFTER DATE OF ACCEPTANCE OF THE PROJECT. IT IS UNDERSTOOD BY THEIR ACCEPTANCE OF THE CONTRACT THAT THEY WILL MAKE GOOD ON ALL WORK AND MATERIALS WHICH ARE DEFECTIVE OR DAMAGED BY ELECTRIC TRADE OR OTHER TRADES FOR THE DURATION OF THE STIPULATED GUARANTEE PERIOD.

2. SCOPE OF WORK

A. THE WORK UNDER THIS SECTION CONSISTS OF FURNISHING ALL LABOR, MATERIALS, EQUIPMENT AND APPLICATIONS INDICATED OR NECESSARY FOR ALL ELECTRICAL WORK AS INDICATED ON THE DRAWINGS OR DESCRIBED OR REFERRED TO IN THE SPECIFICATIONS.

B. THE ELECTRICAL DRAWINGS ARE DIAGRAMMATIC IN CHARACTER. LOCATIONS SHOWN FOR ELECTRICAL EQUIPMENT, DEVICES, CIRCUITING, ETC. ARE APPROXIMATE. ELECTRICAL CONTRACTOR IS RESPONSIBLE FOR COORDINATING EXACT DEVICE LOCATIONS WITH ARCHITECTURAL AND INTERIOR DESIGN PLANS, ELEVATIONS, DETAILS, AND MILLWORK SHOP DRAWINGS. ALL DIMENSIONS ARE TO BE TAKEN OFF OF ARCHITECTURAL PLANS OR MANUFACTURER'S SHOP DRAWINGS.

C. VERIFY IN FIELD AND ENSURE ALL ELECTRICAL CLEARANCES FOR ELECTRICAL EQUIPMENT ARE MAINTAINED PER NEC AND APPLICABLE LOCAL CODES REQUIREMENTS. COORDINATE WITH OTHER TRADES FOR SPACE CONFLICTS PRIOR TO INSTALLATION OF ELECTRICAL EQUIPMENT. DO NOT SCALE OFF OF ELECTRICAL PLANS.

D. WHEN DIMENSIONS ARE SHOWN ON ELECTRICAL PLANS OR DETAILS, THESE DIMENSIONS ARE TO BE FIELD VERIFIED BY THE ELECTRICAL CONTRACTOR AGAINST FIELD CONDITIONS, INSTALLATION REQUIREMENTS OF OTHER TRADES, AND THE MANUFACTURER'S SUBMITTALS FOR EQUIPMENT TO BE INSTALLED. SHOULD ANY CONFLICTS ARISE, WHICH CANNOT BE EASILY RESOLVED IN THE FIELD WITHOUT CHANGING THE DESIGN INTENT, THE ELECTRICAL CONTRACTOR SHALL NOTIFY THE ENGINEER IMMEDIATELY.

E. FOR SITE WORK, CONTRACTOR SHALL BE HELD RESPONSIBLE FOR LOCATING, VERIFYING, AND AVOIDING ANY NEW AND EXISTING UNDERGROUND SERVICES/UTILITIES.

F. THE ELECTRICAL CONTRACTOR OR COMPANIES SUBCONTRACTED UNDER THEIR SCOPE OF WORK SHALL ARRANGE FOR ALL INSPECTIONS WHEN THEY BECOME DUE. ALL WORK PERFORMED UNDER THIS CONTRACT SHALL REMAIN EXPOSED TO VIEW UNTIL APPROVED BY THE INSPECTION AUTHORITY.

[NOTE TO SPEC WRITER: DELETE THE FOLLOWING PARAGRAPH FOR NEW CONSTRUCTION.]

G. ELECTRICAL ITEMS AFFECTED BY REMODEL WORK ARE SHOWN ON DRAWINGS ALONG WITH EXISTING ELECTRICAL INSTALLATION. EXISTING ELECTRICAL SHOWN IS NOT NECESSARILY ALL-INCLUSIVE.

[NOTE TO SPEC WRITER: DELETE THE FOLLOWING SECTION FOR NEW CONSTRUCTION.]

H. ELECTRICAL DEMOLITION

(1) THE CONTRACTOR SHALL INCLUDE ALL COSTS FOR REMOVALS AND RELOCATIONS IN THE CONTRACT. THESE COSTS SHALL INCLUDE WORK DESCRIBED IN THE SPECIFICATIONS AND SHOWN ON THE DRAWINGS WITH ALLOWANCES FOR NORMAL UNFORESEEN DIFFICULTIES WHEN CONCEALED WORK HAS BEEN OPENED. NO CLAIMS FOR ADDITIONAL WORK ASSOCIATED WITH DEMOLITION WILL BE ACCEPTED, EXCEPT IN SPECIFIC CASES CONSIDERED JUSTIFIABLE BY THE ENGINEER OR ARCHITECT.

[NOTE TO SPEC WRITER: SELECT APPROPRIATE PARTY.]

(2) ALL PRESENT ELECTRICAL MATERIAL AND EQUIPMENT WHICH IS TO BE REMOVED UNDER THIS CONTRACT SHALL BECOME THE PROPERTY OF AND SHALL BE REMOVED BY THE ELECTRICAL CONTRACTOR. COORDINATE WITH OWNER FOR ALL ELECTRICAL EQUIPMENT BEING REMOVED AND NOT REUSED. VERIFY, PRIOR TO DEMOLITION, IF EQUIPMENT IS TO BE DISPOSED OF OR STOCKPILED.

(3) THE CONTRACTOR SHALL REMOVE AND/OR RELOCATE ALL EXISTING ELECTRICAL WORK WHICH INTERFERES WITH THE NEW ARCHITECTURAL AND ELECTRICAL LAYOUTS. ALL WORK WHICH IS NO LONGER REQUIRED TO FUNCTION SHALL BE DE- ENERGIZED AND DISCONNECTED AT THE SOURCE OF POWER SUPPLY AND REMOVED IN ITS ENTIRETY.

(4) ALL RACEWAYS WHICH BECOME EXPOSED BEYOND FINISHED SURFACES BECAUSE OF THE ALTERATION WORK SHALL BE REMOVED AND REROUTED BEHIND THE FINISHED SURFACES. REMOVE ABANDONED SURFACE MOUNTED CONDUITS.

(5) PORTIONS OF FEEDER LINES THAT HAVE TO BE REMOVED OR ABANDONED AS A RESULT OF DEMOLITION WORK BUT ARE REQUIRED TO CONTINUE TO FUNCTION SHALL BE CUT AT CONVENIENT LOCATIONS, REROUTED AND RECONNECTED FOR CONTINUATION OF THEIR PRESENT FUNCTION. NEW FEEDER EXTENSIONS SHALL MATCH EXISTING FEEDERS IN ALL RESPECTS, INCLUDING CONDUCTOR CAPACITY, CONDUITS SIZE, ETC.

(6) REMOVE CONDUCTORS FROM EXISTING CONDUITS THROUGH WHICH NEW CONDUCTORS ARE TO BE PULLED.

(7) CONTRACTOR SHALL REMOVE ALL SWITCHES, COMMUNICATION OUTLETS, AND ELECTRICAL OUTLETS SCHEDULED FOR DEMOLITION. ALL UNUSED POWER WIRING SHALL BE REMOVED BACK TO ELECTRICAL PANEL FEEDING THE CIRCUIT.

(8) FOR UNUSED JUNCTION BOXES, REMOVE WIRING AND PROVIDE BLANK COVER PLATE, OR COORDINATE WITH GENERAL CONTRACTOR FOR PATCHING OF WALL TO MATCH ADJACENT WALL FINISH PER DIRECTION OF ARCHITECT.

(9) ALL UNUSED CIRCUITS THAT ARE SPARES SHALL BE TURNED OFF AND LABELED AS SPARES ON REVISED PANEL DIRECTORIES.

(10) RETAIN CIRCUIT CONTINUITY FOR EXISTING ELECTRICAL EQUIPMENT, FIXTURES, AND DEVICES THAT ARE TO REMAIN. SUCH EQUIPMENT SHALL BE RECONNECTED TO EXISTING CIRCUITS OR NEW CIRCUIT(S) AS INDICATED ON DRAWINGS. IF SUFFICIENT CIRCUITS ARE NOT AVAILABLE FOR CONSTRUCTION REMODEL OR THE CIRCUIT IS BEING OVERLOADED, CONTACT ENGINEER IMMEDIATELY. REMOVE JUNCTION BOX COVER PLATES WITH INACCURATE PANEL/CIRCUIT IDENTIFICATION AND REPLACE WITH NEW COVERS REFLECTING ACCURATE PANEL/CIRCUIT INFORMATION.

(11) CONTRACTOR SHALL ENSURE THAT CIRCUITS SHARED BETWEEN PROJECT AREA AND EXISTING SPACES REMAIN INTACT PER ORIGINAL DESIGN INTENT.

(12) ELECTRICAL CONTRACTOR SHALL BE RESPONSIBLE FOR TRACING OUT ALL EXISTING TO REMAIN CIRCUITS WHICH ARE OR MAY BE AFFECTED BY THIS PROJECT, TO ENSURE CIRCUIT CONTINUITY AND TO PREVENT OVERLOADING OF ANY SINGLE CIRCUIT. MAXIMUM OF NINE (9) RECEPTACLES SHALL BE CONNECTED TO A 20-AMP CIRCUIT UNLESS OTHERWISE NOTED OR A MAXIMUM OF 16-AMPS SHALL BE CONNECTED TO A 20-AMP CIRCUIT.

[NOTE TO SPEC WRITER: SELECT APPROPRIATE PARTY.]

(13) FOR EXISTING FLOOR-MOUNTED DEVICES (POKE-THRUS) BEING ABANDONED, REMOVE EXISTING DEVICES, CONDUIT, AND ASSOCIATED WIRING BACK TO POINT OF ORIGIN. MAINTAIN CIRCUIT CONTINUITY FOR REMAINING DEVICES, IF REQUIRED. PROVIDE A FIRE-RATED PLUG AND FLUSH ABANDONMENT KIT. COORDINATE WITH BUILDING MANAGEMENT TO INFORM TENANT BELOW PRIOR TO COMMENCEMENT OF WORK. ALL WORK WITHIN EXISTING TENANT SPACE(S) SHALL BE PERFORMED OFF HOURS UNLESS BUILDING MANAGEMENT AUTHORIZES DIFFERENT HOURS.

[NOTE TO SPEC WRITER: SELECT APPROPRIATE PARTY.]

(14) TENANT'S COMMUNICATIONS VENDOR SHALL REMOVE ALL ABANDONED AND UNUSED PHONE/DATA CABLING, CABLE SUPPORTS, CONDUIT, JUNCTION BOXES AND ASSOCIATED WIRING LOCATED IN THE CEILING SPACE BACK TO POINT OF ORIGIN, UNLESS THE TENANT'S COMMUNICATIONS CONTRACTOR IS CONTRACTED TO REMOVE THE PHONE/DATA CABLING UNDER A SEPARATE CONTRACT. THE GENERAL CONTRACTOR SHALL COORDINATE THE APPROPRIATE CONTRACTOR FOR THE REMOVAL OF THE PHONE /DATA CABLING. PRIOR TO DISCONNECTING AND REMOVING ANY EQUIPMENT, DEVICES OR CABLING, THE APPROPRIATE CONTRACTOR SHALL ENSURE EQUIPMENT IS ABANDONED AND CAN BE REMOVED. COORDINATE WITH OWNER PRIOR TO REMOVAL.

I. ELECTRICAL CONTRACTOR SHALL PROVIDE JUNCTION BOXES, NEW CONDUIT AND WIRING AS REQUIRED TO REPAIR, REROUTE AND RECONNECT CONDUCTORS THAT ARE DAMAGED, DISTURBED OR OTHERWISE ADVERSELY AFFECTED BY THE DEMOLITION AND REMODEL WORK.

J. ALL NEW AND RELOCATED MATERIALS INSTALLED IN CEILING PLENUM SHALL BE UL LISTED FOR PLENUM INSTALLATION. LOW VOLTAGE CABLE AND CONDUCTORS NOT ENCLOSED IN CONDUIT SHALL BE UL CLASS I RATED, WITH INSULATION MEETING NON-TOXICITY REQUIREMENTS.

K. PROVIDE POWER FOR ALL EQUIPMENT PROVIDED BY OTHER TRADES. ELECTRICAL CONTRACTOR SHALL COORDINATE EXACT LOCATION OF ALL MECHANICAL EQUIPMENT REQUIRING ELECTRICAL CONNECTION WITH MECHANICAL/PLUMBING CONTRACTOR. ELECTRICAL CONTRACTOR SHALL OBTAIN MECHANICAL SUBMITTALS TO COORDINATE DISCONNECT MEANS, SPECIFICATIONS, AND VOLTAGE REQUIREMENTS PRIOR TO ROUGH-IN. VERIFY UNIT WHEN DELIVERED TO SITE. IF DISCREPANCIES OCCUR, NOTIFY ELECTRICAL ENGINEER IMMEDIATELY.

L. FOR MODULAR FURNITURE, PROVIDE FLEX CONNECTIONS FROM WALL, POWER POLE, OR FLOOR POKE-THRU FITTINGS TO MODULAR FURNITURE ELECTRIFIED BASES. COORDINATE ALL CONNECTION LOCATIONS WITH FURNITURE SUBCONTRACTOR PRIOR TO ROUGH-IN. ELECTRICAL CONTRACTOR TO MAKE FINAL ELECTRICAL CONNECTIONS TO FURNITURE SYSTEMS.

M. ELECTRICAL CONTRACTOR SHALL VERIFY THAT ALL EXISTING/RELOCATED ELECTRICAL OUTLETS FUNCTION PROPERLY. REPLACE DAMAGED RECEPTACLES OR WIRING WITH NEW WHERE REQUIRED.

N. FOR DEVICES OR JUNCTION BOXES LOCATED IN WALLS, WHICH MUST REMAIN IN PLACE FOR CIRCUIT CONTINUITY, PROVIDE BLANK COVER PLATES TO MATCH NEW/EXISTING COVER PLATES.

O. PROVIDE ALL CUTTING AND PATCHING OF THE STRUCTURE REQUIRED FOR INSTALLATION OF ELECTRICAL WORK. ALL STRUCTURAL CORES SHALL BE COORDINATED WITH STRUCTURAL ENGINEER PRIOR TO CUTTING.

P. PRIOR TO CORE DRILLING THROUGH FLOORS, VERIFY CLEARANCE OF BEAMS, DUCTWORK, ETC. IN CEILING SPACE BELOW AND USE X-RAY/GPR SCANS FOR CONDUIT AND/OR REBAR IN SLAB. COORDINATE WITH OWNER TO INFORM TENANT BELOW OF SCHEDULING FOR CORE DRILLING AND TO ADVISE CONCERNING PROTECTION OF ANY SENSITIVE EQUIPMENT PRIOR TO COMMENCEMENT OF WORK. ALL X-RAYS AND CORE DRILLS MUST BE SCHEDULED FOR AFTER HOURS UNLESS BUILDING MANAGEMENT AUTHORIZES DIFFERENT HOURS.

Q. ENSURE ALL NEW AND EXISTING CONDUITS, COMMUNICATION AND DATA CABLES, AND FIRE ALARM CABLES ARE SUSPENDED INDEPENDENTLY FROM STRUCTURE AND RUN IN CEILING PLENUM NO LOWER THAN 10" ABOVE THE TOP OF THE CEILING GRID (TO ACCOMMODATE LIGHT FIXTURES).

R. PROVIDE TYPEWRITTEN, UPDATED PANEL DOOR DIRECTORIES FOR ALL AFFECTED PANELS, REFLECTING ALL CIRCUITS WITH THEIR ACCURATE DESTINATIONS. CLEARLY MARK JUNCTION BOXES IN CEILING SPACE WITH REVISED CIRCUIT NUMBERS. (THIS APPLIES TO BOTH SIDES OF DEMISING WALLS.) PROVIDE NEW ETCHED PLASTIC LAMINATED LABELS TO REPLACE ANY DAMAGED, MISLABELED, TEMPORARY OR OTHERWISE ILLEGIBLE EXISTING IDENTIFICATION LABELS FOR ALL DISTRIBUTION EQUIPMENT AFFECTED BY THIS CONTRACT. PROVIDE FOR PERMANENT ATTACHMENT TO EQUIPMENT WITH RIVETS OR SCREWS. SELF ADHESIVE TYPE IS NOT ACCEPTABLE.

3. TESTING

A. EVERY PART OF THE INSTALLATION SHALL BE TESTED, OPERATED AND LEFT IN PERFECT WORKING ORDER. SCHEDULE ACCEPTANCE TESTS TO SUIT THE CONVENIENCE OF THE TENANT.

B. TEST ALL WIRES AND CABLES INSTALLED UNDER THIS CONTRACT WITH A 1,000 VOLT MEGOHMMETER. FURNISH THE ENGINEER A COPY OF THE RESULTS TOGETHER WITH AN OUTLINE OF THE METHOD USED. IF IN THE OPINION OF THE ENGINEER, ANY READINGS ARE LOWER THAN REQUIRED BY GOOD PRACTICE OR APPLICABLE CODES PROMPTLY REPLACE THE MATERIALS OR EQUIPMENT INVOLVED AND RE-TEST.

[NOTE TO SPEC WRITER: REMOVE NEXT 3 SECTIONS IF NO NEW PANELBOARDS OR DISTRIBUTION]

C. SHORT-CIRCUIT STUDY

THE ELECTRICAL EQUIPMENT MANUFACTURER SHALL PERFORM A SHORT-CIRCUIT ANALYSIS OF THE SPECIFIED ELECTRICAL POWER DISTRIBUTION SYSTEM. THIS ANALYSIS SHALL INCLUDE:

(1) CALCULATION OF THE MAXIMUM RMS SYMMETRICAL THREE-PHASE SHORT-CIRCUIT CURRENT AVAILABLE AT SIGNIFICANT LOCATIONS IN THE ELECTRICAL SYSTEM. THE RESULTS SHALL REPRESENT THE HIGHEST SHORT-CIRCUIT CURRENTS TO WHICH THE EQUIPMENT MIGHT BE SUBJECTED UNDER THE REPORTED SYSTEM CONDITIONS. THE SHORT-CIRCUIT CURRENTS SHALL BE CALCULATED WITH THE AID OF A DIGITAL COMPUTER. APPROPRIATE MOTOR SHORT-CIRCUIT CONTRIBUTION SHALL BE INCLUDED IN THE CALCULATION.

(2) THE STUDY SHALL INCLUDE ALL PORTIONS OF THE ELECTRICAL DISTRIBUTION SYSTEM FROM THE NORMAL SOURCES OF POWER THROUGHOUT THE LOW-VOLTAGE DISTRIBUTION SYSTEM. NORMAL SYSTEM OPERATING METHOD, AND OPERATIONS WHICH COULD RESULT IN MAXIMUM FAULT CONDITIONS SHALL BE THOROUGHLY COVERED IN THE STUDY.

(3) THE STUDY SHALL BE CALCULATED FROM THE UTILITY METER TO THE UNIT SUBSTATION/SERVICE SWITCHBOARD TO THE LOWEST OVERCURRENT DEVICE OR EQUIPMENT ON THE ELECTRICAL DISTRIBUTION SYSTEM. STUDY SHALL MEET LOCAL AHJ REQUIREMENTS AND INCLUDE NO LESS THAN WHAT IS SHOWN IN DESIGN DOCUMENTS. THE UTILITY CONDUCTORS SHALL NOT BE USED FOR CALCULATIONS.

(4) AN EVALUATION OF THE ADEQUACY OF THE SHORT-CIRCUIT RATINGS OF THE ELECTRICAL EQUIPMENT SUPPLIED BY THAT MANUFACTURER.

[NOTE TO SPEC WRITER: SELECT APPROPRIATE PARTY.]

(5) PROVIDE ELECTRONIC COPIES OF THE SHORT-CIRCUIT ANALYSIS FOR THE ENGINEER'S APPROVAL WITHIN 60 DAYS OF CONTRACT AWARD. DOCUMENTATION SHALL INCLUDE THE FOLLOWING:

- INPUT DATA, CALCULATED RESULTS, AND AN EXPLANATION OF HOW TO INTERPRET THE PRINTOUTS.
- A ONE-LINE DIAGRAM IDENTIFYING ALL BUS LOCATIONS AND THE MAXIMUM AVAILABLE SHORT-CIRCUIT CURRENT AT EACH BUS.
- A BUS-TO-BUS LISTING OF THE MAXIMUM AVAILABLE SHORT-CIRCUIT CURRENT EXPRESSED IN RMS SYMMETRICAL AMPERES AND THE X/R RATIO OF THE FAULT CURRENT.
- A TABLE OF EQUIPMENT SHORT-CIRCUIT RATINGS VERSUS CALCULATED SHORT-CIRCUIT CURRENT VALUES.
- AN ANALYSIS OF THE RESULTS IN WHICH ANY INADEQUACIES SHALL BE CALLED TO THE ATTENTION OF THE ENGINEER AND RECOMMENDATIONS MADE FOR IMPROVEMENTS. THESE RECOMMENDATIONS SHALL BE INCORPORATED BY THE ELECTRICAL EQUIPMENT MANUFACTURER TO THE ELECTRICAL EQUIPMENT AT NO COST TO THE TENANT, WHERE APPROVED BY THE ENGINEER.

(1) AT THE TIME OF THE FINAL INSPECTION AND TESTS, ALL CONNECTIONS AT THE PANELS AND ALL SPLICES, ETC., MUST HAVE BEEN COMPLETED. ALL FUSES MUST BE IN PLACE AND THE CIRCUITS CONTINUOUS FROM SERVICE SWITCHES TO ALL RECEPTACLES, OUTLETS, MOTORS, ETC.

D. PROTECTIVE DEVICE COORDINATION STUDY

THE ELECTRICAL EQUIPMENT MANUFACTURER SHALL PERFORM A PROTECTIVE DEVICE TIME-CURRENT COORDINATION ANALYSIS OF THE SPECIFIED ELECTRICAL POWER DISTRIBUTION SYSTEM. THIS ANALYSIS SHALL INCLUDE:

(1) A DETERMINATION OF SETTINGS OR RATINGS FOR THE OVER-CURRENT PROTECTIVE DEVICES SUPPLIED. WHERE NECESSARY, AN APPROPRIATE COMPROMISE SHALL BE MADE BETWEEN SYSTEM PROTECTION AND SERVICE CONTINUITY WITH SYSTEM PROTECTION AND SERVICE CONTINUITY CONSIDERED TO BE OF EQUAL IMPORTANCE. THE TIME-CURRENT COORDINATION ANALYSIS SHALL BE PERFORMED WITH THE AID OF A DIGITAL COMPUTER.

(2) AN EVALUATION TO THE DEGREE OF SYSTEM PROTECTION AND SERVICE CONTINUITY POSSIBLE WITH OVERCURRENT DEVICES SUPPLIED.

[NOTE TO SPEC WRITER: SELECT APPROPRIATE PARTY.]

(3) PROVIDE ELECTRONIC COPIES OF THE PROTECTIVE DEVICE TIME-CURRENT COORDINATION ANALYSIS FOR THE ENGINEER'S APPROVAL.
WITHIN 60 DAYS OF CONTRACT AWARD. DOCUMENTATION SHALL INCLUDE THE FOLLOWING:

- LOG-LOG PLOTS OF TIME-CURRENT CHARACTERISTIC CURVES.
- A TABULATION OF THE SUGGESTED SETTINGS OF THE ADJUSTABLE OVERCURRENT PROTECTIVE DEVICES SUPPLIED.
- THE KEY OR LIMITING OVERCURRENT DEVICE CHARACTERISTICS, LOAD CHARACTERISTICS, AND PROTECTION REQUIREMENTS AFFECTING THE SETTING OR RATINGS OF THE OVERCURRENT PROTECTIVE DEVICES SUPPLIED.
- THE DEGREE OF SERVICE CONTINUITY AND SYSTEM PROTECTION ACHIEVED WITH THE OVERCURRENT PROTECTIVE DEVICES SUPPLIED.
- AN ANALYSIS OF THE RESULTS IN WHICH ANY INADEQUACIES SHALL BE CALLED TO THE ATTENTION OF THE ENGINEER AND RECOMMENDATIONS MADE FOR IMPROVEMENTS. THESE RECOMMENDATIONS SHALL BE INCORPORATED BY THE ELECTRICAL EQUIPMENT MANUFACTURER TO THE ELECTRICAL EQUIPMENT AT NO COST TO THE TENANT, WHERE APPROVED BY THE ENGINEER.

E. ARC FLASH HAZARD ANALYSIS

(1) PROVIDE MANUFACTURER ARC FLASH LABELING/IDENTIFICATION ON ALL NEW EQUIPMENT PER NEC.
(2) (2) PROVIDE WITH THE COORDINATION AND SHORT CIRCUIT STUDIES AN ARC FLASH STUDY AND DEVICE BY DEVICE LISTING OF PPE REQUIREMENTS AND RATINGS AS REQUIRED BY THE NEC AND NFPA 70E. ALL EQUIPMENT SHALL HAVE APPROPRIATE LABELING PROVIDED AND INSTALLED BY THE ELECTRICAL CONTRACTOR/MANUFACTURER AS DETERMINED BY THE STUDY.

4. ELECTRIC SERVICE

A. PROVIDE PERMANENT UTILITY SERVICE ENTRANCE COMPLETE AND FULLY OPERATIONAL.

B. TENANT SHALL PAY THE ELECTRIC UTILITY SERVICE CONNECTION CHARGES DIRECTLY.

C. CONTRACTOR SHALL OBTAIN THE LATEST UTILITY STANDARDS FOR MATERIALS AND INSTALLATION REQUIREMENTS AND COMPLY FULLY.

D. SERVICE ENTRANCE EQUIPMENT

(1) FRONTS SHALL BE SURFACE OR FLUSH TYPE AS INDICATED ON PANEL SCHEDULES AND/OR PLANS.

(2) MULTI-SECTION PANELBOARD CABINETS SHALL BE OF THE SAME HEIGHT AND FURNISHED WITH BUSHED, MINIMUM 3" DIAMETER OPENINGS BETWEEN SECTIONS, LOCATED NEAR TOP AND BOTTOM END GUTTERS TO ALLOW FOR CABLE TIE BETWEEN SECTION BUSSES. FLUSH TYPE TRIMS FOR MULTI-SECTION PANELS SHALL BE SHEARED TO ALLOW FOR JOINING OF SECTION CABINETS.

E. METERING

(1) PROVIDE KW AND KWH METER BASES, METER RACEWAY AND METERING CONDUCTORS PER UTILITY REQUIREMENTS, FROM CURRENT TRANSFORMERS (CTS) TO METER LOCATION(S).
(2) THE SWITCHBOARD MANUFACTURER SHALL CONFIRM ALL LOCAL UTILITY REQUIREMENTS AND SHALL PROVIDE THE EQUIPMENT THAT MEETS THESE REQUIREMENTS.

F. WORK BY UTILITY
(1) PRIMARY CONDUCTORS AND TERMINATIONS.
(2) UTILITY SERVICE TRANSFORMER(S).
(3) TERMINATION OF SERVICE ENTRANCE SECONDARY CONDUCTORS AT UTILITY CONNECTION POINT.
(4) CURRENT TRANSFORMERS AND UTILITY REVENUE METERS.
(5) VAULT LIGHTING AND MISCELLANEOUS RECEPTACLES.

G. WORK BY ELECTRICAL CONTRACTOR
(1) PRIMARY RACEWAY AND PULL CORDS.
(2) SERVICE ENTRANCE RACEWAYS AND CONDUCTORS PER UTILITY STANDARDS.
(3) GROUNDING RODS AND GROUNDING CONDUCTOR AT TRANSFORMER VAULTS.
(4) METER BASES PER UTILITY REQUIREMENTS.
(5) ALL METERING RACEWAYS AND CONDUCTORS PER UTILITY REQUIREMENTS.
(6) CURRENT TRANSFORMER ENCLOSURES PER UTILITY REQUIREMENTS.
(7) BUILDING SERVICE ENTRANCE RACEWAYS AND CONDUCTORS PER UTILITY REQUIREMENTS.
(8) CONDUCTOR PHASING IDENTIFICATION ON ALL CONDUCTORS, AT ALL TERMINATIONS POINTS AND ALL MANHOLES, HANDHOLDS AND PULL BOXES.
(9) SERVICE ENTRANCE EQUIPMENT.
(10) SERVICE ENTRANCE GROUNDING PER CODE.
(11) ALL REQUIRED COORDINATION WITH UTILITY.

H. WORK BY GENERAL CONTRACTOR
(1) CIVIL ENGINEERING, EXCAVATION, BACKFILL AND COMPACTION FOR PRIMARY RACEWAYS PER UTILITY STANDARDS.
(2) TRANSFORMER VAULT AND PER UTILITY STANDARDS REQUIREMENTS.
(3) PROVIDE THE SERVICE AS REQUIRED TO COMPLETELY CONFORM TO UTILITY STANDARDS REQUIREMENTS.

5. PANELBOARDS

A. NEW PANELBOARDS SHALL BE 3-PHASE, 4-WIRE WITH SOLID FULL SIZE NEUTRAL BUS AND GROUND BUS, UNO. ALL BUSES SHALL BE COPPER UNLESS OTHERWISE NOTED. IF REQUIRED, PROVIDE A FULL-SIZE ISOLATED GROUND BUS BAR AND CONNECT PER NEC REQUIREMENTS. REFER TO ELECTRICAL ONE-LINE DIAGRAM AND SCHEDULES FOR ADDITIONAL INFORMATION.

B. CIRCUIT BREAKERS SHALL BE QUICK-MAKE, QUICK-BREAK, MOLDED CASE TYPE WITH THERMAL MAGNETIC TRIPS. FRAME SIZE, NUMBER OF POLES, AND TRIP SETTING AS SHOWN ON PLANS, ONE-LINES, OR SCHEDULES.

C. LOAD CENTERS ARE NOT ALLOWED AND WILL BE REPLACED BY THE ELECTRICAL CONTRACTOR, AT THEIR EXPENSE IF THE LOAD CENTERS ARE INSTALLED.

D. PANEL ENCLOSURES SHALL BE SURFACE OR RECESSED MOUNTED, FABRICATED OF GALVANIZED SHEET STEEL, WITH LAPPED AND RIVETED OR WELDED CORNER. PANELBOARD SHALL BE SUPPORTED BY SUITABLE FLOOR TO CEILING ANGLE IRONS OR CHANNELS, ATTACHED TO STRUCTURAL FRAMEWORK OF THE BUILDING TO THE SATISFACTION AND APPROVAL OF THE ARCHITECT. SUBMIT ATTACHMENT DETAILS FOR APPROVAL BEFORE INSTALLATION. PANELBOARD FRONTS SHALL BE HINGED TO BOX CONSTRUCTION.

E. PANELBOARDS INSTALLED IN FOOD SERVICE AREAS SHALL BE RECESSED OR PROVIDED WITH STAINLESS STEEL/WIPEABLE SKIRT FROM FLOOR TO CEILING.

F. PROVIDE APPROVED LARGE SIZE METAL DIRECTORY FRAMES INSIDE OF PANEL DOOR. COMPLETE WITH TRANSPARENT PLASTIC COVERS OVER TYPEWRITTEN CARDS WHICH SHALL INDICATE AND LIST ALL FEEDERS OR CIRCUITS SUPPLIED FROM PANEL.

G. BACKBOX INTERIORS, INSIDE TRIM, DOOR, AND EXTERIOR SHALL BE PAINTED WITH A RUST INHIBITOR AFTER PICKLING AND FINISHED IN ANSI-61 GRAY ENAMEL.

H. AT CONCLUSION OF PROJECT, PANELBOARD DIRECTORIES SHALL BE FULLY UPDATED, AND ALL SPARE CIRCUIT BREAKERS SHALL BE PLACED IN THE "OFF" POSITION. INSTALL FILLER PLATES IN UNUSED SPACES.

6. LOW VOLTAGE TRANSFORMERS

A. SHALL BE GENERAL PURPOSE, DRY-TYPE DOE 2016 TRANSFORMER, UNLESS NOTED OTHERWISE.

B. COMPLY WITH NEMA STANDARD ST 20 "DRY-TYPE" TRANSFORMERS FOR GENERAL APPLICATIONS.

C. THREE PHASE TRANSFORMERS SHALL BE 480 VOLT DELTA PRIMARY 208Y/120 VOLT, 3-PHASE, 4-WIRE SECONDARY UNLESS OTHERWISE NOTED. OTHER VOLTAGES SHALL BE AS SHOWN ON THE DRAWINGS OR OTHERWISE REQUIRED.

D. FACTORY ASSEMBLED AND TESTED, AIR COOLED UNITS OF TYPES SPECIFIED, HAVING CHARACTERISTICS AND RATINGS AS INDICATED ON DRAWINGS. UNITS SHALL BE DESIGNED FOR RATINGS AS INDICATED IN DRAWINGS AND FOR 60 HZ SERVICE.

E. CORE CONSTRUCTION SHALL BE OF GRAIN ORIENTED, NON-AGING SILICON STEEL WITH HIGH PERMEABILITY, LOW HYSTERESIS AND LOW EDDY CURRENT LOSSES AS NEED TO ACHIEVE REQUIRED EFFICIENCY LEVELS. CORE LAMINATIONS SHALL BE TIGHTLY ASSEMBLED AND MAGNETIC FLUX DENSITIES SHALL BE KEPT WELL BELOW THE SATURATION POINT.

F. COILS SHALL HAVE CONTINUOUS WINDINGS WITHOUT SPLICES EXCEPT FOR TAPS.

G. INTERNAL COIL CONNECTIONS SHALL BE BRAZED OR PRESSURE TYPE.

H. ALL TRANSFORMER WINDINGS SHALL BE COPPER UNLESS OTHERWISE NOTED OR DIRECTED BY OWNER /ENGINEER.

I. WIRING COMPARTMENT AND TERMINATION SHALL BE ACCESSIBLE BY REMOVING ENCLOSURE FRONT PANELS. THREE PHASE TRANSFORMERS SHALL USE ONE COIL PER PHASE IN PRIMARY AND SECONDARY WINDINGS.

J. TRANSFORMERS SHALL MEET THE ENERGY EFFICIENCY REQUIREMENTS OF 2016 10 CFR PART 431. THE USE OF FANS TO OBTAIN RATED KVA OR ANY PUBLISHED RATING SHALL NOT BE PERMITTED FOR ALL TRANSFORMER TYPES.

K. SOUND LEVELS SHALL NOT EXCEED THE FOLLOWING: 150 KVA AND BELOW, 50 DB; ABOVE 150 KVA, 60 DB.

L. TRANSFORMERS SHALL HAVE THE FOLLOWING FEATURES AND RATINGS:
(1) ENCLOSURES SHALL MEET UL 506 REQUIREMENTS.
(2) ENCLOSURE: INDOOR, VENTILATED, DRIP PROOF IN ELECTRIC ROOMS.
(3) INSULATION CLASS: 185C CLASS FOR 37½ KVA TRANSFORMERS OR SMALLER; 220C CLASS FOR TRANSFORMERS LARGER THAN 37½ KVA.
(4) INSULATION TEMPERATURE RISE: 150C MAXIMUM RISE ABOVE 40C, FOR 220C CLASS INSULATION; 115C MAXIMUM RISE FOR 185C CLASS INSULATION.
(5) FOR TRANSFORMER 3KVA AND LARGER, FULL CAPACITY TAPS IN HIGH-VOLTAGE WINDING AS FOLLOWS:

- 3 KVA THROUGH 30 KVA: FOUR 2.5% TAPS, TWO ABOVE AND TWO BELOW NORMAL VOLTAGE.
- 30 KVA THROUGH 500 KVA: FOUR 2.5% TAPS, TWO ABOVE AND TWO BELOW RATED NORMAL VOLTAGE.

M. ACCESSORIES:
(1) WALL MOUNTING BRACKETS: MANUFACTURERS STANDARD BRACKETS FOR TRANSFORMERS SIZED UP TO 15 KVA WHERE WALL MOUNTING IS INDICATED ON DRAWINGS.
(2) CORE AND COIL ASSEMBLIES 30 KVA AND LARGER TO BE MOUNTED ON RUBBER VIBRATION ISOLATORS ON CONCRETE PADS.

N. ALL CLEARANCES SHALL BE MAINTAINED PER NEC REQUIREMENTS. ELECTRICAL CONTRACTOR SHALL FIELD VERIFY FINAL LOCATION, HEIGHT RESTRICTIONS AND CLEARANCES PRIOR TO PURCHASING TRANSFORMERS THAT ARE INDICATED TO BE MOUNTED IN PLENUM SPACE OR CEILING MOUNTED.

7. SAFETY SWITCHES

A. SAFETY SWITCHES SHALL BE HEAVY DUTY TYPE, RATED FOR MOTORS OR EQUIPMENT AS INDICATED ON PLANS AND SCHEDULES; STANDARD ENCLOSURE INDOORS AND WEATHER-TIGHT NEMA 3R ENCLOSURE OUTDOORS, FUSED OR NON-FUSED AS NOTED ON DRAWINGS.

B. ELECTRICAL CONTRACTOR SHALL PROVIDE SAFETY DISCONNECT SWITCHES FOR ALL MECHANICAL EQUIPMENT, EXCEPT WHERE OTHERWISE SPECIFICALLY INDICATED ON MECHANICAL/PLUMBING PLANS. (REFER TO MECHANICAL/PLUMBING PLANS AND EQUIPMENT SCHEDULES FOR OTHER REQUIREMENTS.) WHERE FUSED DISCONNECTS ARE UTILIZED, FUSE SIZE SHALL BE VERIFIED WITH MANUFACTURER'S CUT SHEETS AND UNIT NAMEPLATE DATA WHEN UNIT ARRIVES ON SITE OR AS REQUIRED BY LOCAL CODE AND ORDINANCES. SHOULD FUSE REQUIREMENTS BE OTHER THAN SHOWN, NOTIFY ENGINEER IMMEDIATELY.

C. SWITCHES UP TO AND INCLUDING 600 AMPERES SHALL BE HORSEPOWER RATED.

D. SWITCHES SHALL HAVE A QUICK-MADE, QUICK-BREAK OPERATING HANDLE AND MECHANISM WHICH SHALL BE AN INTEGRAL PART OF THE ENCLOSURE, NOT THE COVER.

E. PROVIDE INTERLOCKS TO PREVENT OPENING THE COVER WITH THE SWITCH IN THE "ON" POSITION OR CLOSING OF THE SWITCH WITH THE DOOR OPEN.

F. SWITCHES SHALL BE CAPABLE OF WITHSTANDING THE AVAILABLE FAULT LET-THROUGH CURRENT BEFORE THE FUSE OPERATES WITHOUT DAMAGE OR CHANGE IN RATING.

G. FUSE CLIPS, WHERE REQUIRED, SHALL BE OF THE REJECTION TYPE AND SHALL ACCOMMODATE DUAL ELEMENT, CURRENT LIMITING FUSES ONLY. FUSES SHALL BE SPECIFIED UNDER "FUSES".

H. PROVIDE THERMAL OVERLOAD SWITCHES WITH LOCKOUT MEANS TO MEET NEC REQUIREMENTS WERE INDICATED ON PLANS. IF THERMAL OVERLOAD SWITCHES WITH LOCKOUT ARE NOT AVAILABLE, PROVIDE DISCONNECT SWITCHES WITH FUSES RATED PER SCHEDULES OR PLANS.

TRUE NORTH   PROJECT NORTH

Clic. DESIGN STUDIO

50 SOUTH STEELE STREET, DENVER, CO 80209

FOUNDERS + PRINCIPALS
RENE STREMEL | 303.437.4956 |
RENE@CLICDESIGNSTUDIO.COM
SARAH MCGARRY | 303.915.4314 |
SARAH@CLICDESIGNSTUDIO.COM

© COPYRIGHT 2022
ANY UNAUTHORIZED USE OF THESE DOCUMENTS IS PROHIBITED WITHOUT THE WRITTEN CONSENT OF CLIC DESIGN STUDIO.

CMTA
A LEGENCE Company
formerly KLOK Group

NOT FOR CONSTRUCTION

THRIVING FAMILIES
191 Yuma St, Denver CO, 80223

ISSUANCE:	DATE
FOR CONSTRUCTION	2024.04.10

REVISION	DATE

PROJECT NUMBER: 20XXX

SHEET TITLE:
SPECIFICATIONS

SHEET NUMBER:
E0.01

8. FUSES

G. GENERAL

(1) PROVIDE REJECTION FUSES FOR ALL FUSIBLE EQUIPMENT REGARDLESS OF WHICH TRADE HAS FURNISHED SUCH EQUIPMENT.

(2) FUSES SHALL BE OF THE RATINGS AND TYPES SHOWN ON THE DRAWINGS OR AS RECOMMENDED BY EQUIPMENT MANUFACTURER.

(3) FUSES SHALL BE UL LISTED AND SHALL BE BUSSMAN MANUFACTURING CO., FERRAZ SHAWMUT, OR CEFCO.

(4) PROVIDE 10 % SPARES (MINIMUM OF THREE) OF EACH SIZE AND TYPE. SPARE FUSES SHALL BE TURNED OVER TO THE TENANT.

H. PRODUCTS

(1) ALL FUSES SHALL BE CURRENT LIMITING AND HAVE AN INTERRUPTING CAPACITY OF AT LEAST 200,000 AMPERES RMS SYMMETRICAL.

(2) THE TIME-CURRENT CHARACTERISTICS AND RATINGS SHALL BE SUCH THAT POSITIVE SELECTIVE COORDINATION IS ASSURED.

9. CONDUITS, FITTINGS AND SUPPORTS

A. CONDUIT

(1) INTERMEDIATE METAL CONDUIT(IMC)

- SHALL BE INTERMEDIATE STEEL PIPE, HOT DIP GALVANIZED, THREADED, MINIMUM 3/4".
- SHALL BE PAINTED WITH TWO PROTECTIVE COATS OF ASPHALTUM COMPOUND WHERE LOCATED UNDERGROUND OR BELOW SLAB.

(1) ELECTRIC METALLIC TUBING (EMT)

- SHALL BE THIN WALL STEEL PIPE, GALVANIZED, THREADLESS, MINIMUM 3/4", MAXIMUM 2".
- EMT SHALL NOT BE USED FOR CABLE RATED ABOVE 600 VOLTS.

(1) RIGID METALLIC CONDUIT (RMC)

- SHALL BE FULL WEIGHT STEEL PIPE, HOT DIP GALVANIZED INSIDE AND OUTSIDE, THREADED, MINIMUM 3/4".
- SHALL BE PAINTED WITH TWO PROTECTIVE COATS OF ASPHALTUM COMPOUND WHERE LOCATED UNDERGROUND OR BELOW SLAB.

(1) FLEXIBLE METALLIC CONDUIT (FMC) SHALL BE CONTINUOUS SINGLE STRIP, GALVANIZED, MINIMUM 3/4".

(2) LIQUID-TIGHT FLEXIBLE METAL CONDUIT (LFMC) SHALL CONSIST OF A CORE OF FLEXIBLE GALVANIZED SHEET TUBING OVER WHICH IS EXTRUDED A LIQUID-TIGHT JACKET OF POLYVINYL CHLORIDE (PVC). FLEXIBLE METAL CONDUIT SHALL BE IN ACCORDANCE WITH FEDERAL SPECIFICATION WW-C-566 AND UL-360.

(3) COUPLINGS AND CONNECTORS FOR EMT SHALL BE MADE OF STEEL ONLY, RAIN AND CONCRETE TIGHT AND SHALL BE SET SCREW TYPE FITTINGS FOR LIQUID-TIGHT FLEXIBLE CONDUIT SHALL BE IN ACCORDANCE WITH FEDERAL SPECIFICATIONS W-F-406B AND UL- 360 INCORPORATING A THREADED GROUND CONE, A STEEL OR PLASTIC COMPRESSION RING AND A GLAND FOR TIGHTENING. FITTINGS SHALL BE MADE OF STEEL ONLY WITH INSULATED THROATS.

(4) DIE-CAST ZINC OR OTHER MATERIAL SHALL NOT BE USED ON EMT, FLEX AND MC CONDUIT.

(5) FITTINGS FOR FLEXIBLE METAL CONDUIT SHALL BE IN ACCORDANCE WITH FEDERAL SPECIFICATION W-F-406B AND UL-360 MADE OF STEEL AND HAVING INSULATED THROATS.

(6) DIE CAST ZINC-ALLOY FITTINGS SHALL NOT BE USED ON ANY TYPE OF RIGID FLEXIBLE CONDUIT.

(7) EXPANSION FITTINGS SHALL BE AS FOLLOWS:

- TYPE A - DEFLECTION AND EXPANSION FITTING-CROUSE HINDS, TYPE XD OR O.Z. TYPE DX.
- TYPE B- EXPANSION FITTING - SPRING CITY TYPE EF OR O.Z., TYPE EX.

B. CLOSING OF OPENINGS

(1) ALL PENETRATIONS MADE IN RATED WALLS AND FLOORS FOR THE PURPOSE OF ROUTING ELECTRICAL SERVICES OR COMMUNICATION CABLES SHALL BE FIRE STOPPED ONCE SERVICE CONDUITS, SLEEVES, OR CABLES ARE IN PLACE. EACH TRADE SHALL BE RESPONSIBLE FOR SEALING AFTER CONDUIT OR CABLING HAS BEEN INSTALLED.

(2) FILLING MATERIALS FOR OPENING SHALL BE FIRE-RESISTIVE, WITH A RATING EQUAL TO THE MATERIAL OF THE WALL OF SLAB ITSELF AND FINISHED SO AS TO PREVENT PASSAGE OF WATER, SMOKE AND FUMES.

(3) WHERE CONDUITS PASSING THROUGH OPENINGS ARE EXPOSED IN FINISHED ROOMS, THE FINISH OF THE FILLING MATERIAL SHALL MATCH AND BE FLUSH WITH THE ADJOINING CEILING OR WALL FINISHES.

(4) THE FILLING MATERIAL SHALL BE CHASE TECHNOLOGY CORPORATION "CHASE FOAM" TYPE CTC PR-855 SILICONE FOAM FIRE STOP.

C. CONDUIT SLEEVES

(1) SLEEVES SHALL BE GALVANIZED STEEL, CAST IRON, PLASTIC OR DUCTILE IRON PIPE WHEN THEY ARE LOCATED IN CONCRETE WALLS OR FOUNDATIONS. IN OTHER LOCATIONS, SLEEVES SHALL BE CONSTRUCTED OF 22 GAUGE GALVANIZED SHEET STEEL HAVING LOCK SEAM JOINTS.

D. CONDUIT SUPPORTS

(1) ENSURE THAT ALL EXISTING AND NEW CONDUIT IS SUPPORTED SEPARATELY FROM BUILDING STRUCTURE AND PER NEC REQUIREMENTS.

(2) PIPE STRAPS SHALL BE TYPE I STYLE A OR B IN ACCORDANCE WITH FEDERAL SPECIFICATION PF-S-760A.

(3) INDIVIDUAL AND MULTIPLE PIPE HANGERS AND RISE CLAMPS INCLUDING ALL PARTS AND HARDWARE SHALL BE HOT-DIPPED GALVANIZED THROUGHOUT. ALL U-BOLTS, CLAMPS, ATTACHMENTS AND HARDWARE FOR HANGER ASSEMBLY AND CONDUITS SHALL BE PROVIDED. EACH MULTIPLE HANGER SHALL BE DESIGNED TO SUPPORT A LOAD EQUAL TO OR GREATER THAN THE SUM OF THE WEIGHTS OF THE CONDUITS, WIRES AND HANGER ITSELF, PLUS 200 POUNDS.

(4) HANGERS AND HARDWARE SHALL BE IN ACCORDANCE WITH FEDERAL SPECIFICATIONS WW-H-1/1D.

E. UTILIZATION

(1) OUTDOOR UNDERGROUND CONCRETE ENCASED, BELOW BUILDING OR AWAY FROM BUILDING - RMC, PVC

(2) OUTDOOR ABOVE GROUND EXPOSED OR CONCEALED - LMFC

(3) OUTDOOR ABOVE GROUND FINAL CONNECTION TO VIBRATING EQUIPMENT: TRANSFORMERS, SOLENOIDS, MOTORS, ETC. - LFMC

(4) INDOOR 600 VOLTS AND ABOVE CONCRETE ENCASED - RMC

(5) INDOOR EXPOSED BELOW 10 FEET TO FLOOR IN "BACK OF HOUSE" SPACES SUCH AS MECHANICAL, ELECTRICAL, BASEMENTS, ATTICS, ETC. - RMC, EMT

(6) INDOOR EXPOSED BELOW 10 FEET, OTHER THAN BACK OF HOUSE SPACES - EMT

(7) INDOOR EXPOSED ABOVE 10 FEET TO FLOOR - EMT, RA

(8) INDOOR CONCEALED HOMERUN TO PANELBOARDS AND FOR BRANCH CIRCUITS - EMT

(9) INDOOR CONCEALED FINAL BRANCH WIRING TO RECEPTACLES AND LIGHT FIXTURE - MC

(10) INDOOR FINAL CONNECTION TO VIBRATING EQUIPMENT: TRANSFORMERS, SOLENOIDS, MOTORS, ETC. IN DRY AREAS - FMC

(11) INDOOR FINAL CONNECTION TO VIBRATING EQUIPMENT: TRANSFORMERS, SOLENOIDS, MOTORS, ETC., IN MOIST, HUMID, WET, OR CORROSIVE AREAS - LFMC

(12) WITHIN CONCRETE SLABS, OR CONNECTIONS TO CAST-IN-PLACE FLOOR BOXES. MAXIMUM SIZES AND LOCATIONS OF CONDUIT SUBJECT TO APPROVAL BY STRUCTURAL ENGINEER AND ARCHITECT - RMC, IMC

(13) HAZARDOUS AREAS - RMC

(14) TERRAZZO FLOOR WITH CONDUIT ROUTED UNDERNEATH, NOT WITHIN TERRAZZO - RMC

(15) FIRE ALARM INITIATING CIRCUITS AND SIGNALING CIRCUITS - EMT

(16) FIRE ALARM SYSTEM AUTO DIALER TELEPHONE CIRCUIT - RMC

F. INSTALLATION

(1) ALL CONDUIT AND RACEWAYS SHALL BE INSTALLED CONCEALED, EXCEPT WHERE SHOWN TO BE RUN EXPOSED ON DRAWINGS. CONDUIT SHALL BE RUN HORIZONTALLY AND VERTICALLY SQUARE TO COLUMN LINES.

(2) THE SIZE OF EACH RUN OF CONDUIT OR EMT SHALL BE THE LARGER OF THE FOLLOWING:

- THE MINIMUM SIZE, WHICH SHALL BE 3/4 IN UNLESS OTHERWISE SPECIFIED FOR PARTICULAR ITEM OR SYSTEM.
- THE SIZE NOTED ON THE DRAWINGS.
- THE SIZE REQUIRED BY THE NEC TO ACCOMMODATE THE NUMBER, SIZE AND TYPE OF WIRES SHOWN, SPECIFIED OR REQUIRED. ELECTRICAL CONTRACTOR SHALL ADJUST CONDUIT SIZE FOR CONDUIT FILL AND WIRE SIZE FOR NUMBER OF HOT CURRENT CONDUCTORS, VOLTAGE DROP AND DERATING OF THE CONDUCTORS IN EACH CONDUIT RUN.
- ALL HOMERUNS SHALL BE IN ELECTRICAL METALLIC TUBING (EMT).
- ALL EXPOSED WIRING SHALL BE IN IMC, EMT, OR GRC.

G. EXPANSION JOINTS

(1) PROVIDE EXPANSION JOINTS FOR ALL CONDUITS CROSSING STRUCTURAL EXPANSION JOINTS, AND IN ALL STRAIGHT CONDUIT RUNS OVER 100 FEET.

(2) IN ADDITION TO THE GROUNDING RING, A SEPARATE EQUIPMENT GROUNDING CONDUCTOR SHALL BE PROVIDED. FREE END OF CONDUITS IN EXPANSION JOINTS SHALL BE PROVIDED WITH INSULATED BUSHINGS.

H. FITTINGS

(1) ONLY THREADED FITTINGS SHALL BE USED WITH IMC.

(2) THREE PIECE THREADED COUPLINGS SHALL BE USED TO JOIN TWO CONDUITS COMING TOGETHER FROM OPPOSITE DIRECTIONS WHEN STANDARD THREADED COUPLINGS CAN NOT BE USED.

(3) ONLY STEEL FITTINGS SHALL BE USED WITH STEEL CONDUITS. CONDUIT NIPPLES WITH RUNNING THREADS SHALL NOT BE USED. SPLIT COUPLINGS SHALL NOT BE USED UNLESS SPECIFICALLY APPROVED BY THE ENGINEER FOR USE IN LOCATIONS WHERE STANDARD COUPLINGS CAN NOT BE EMPLOYED.

10. BOXES

A. PULL BOXES

(1) PULL BOXES EXPOSED TO RAIN OR INSTALLED IN WET LOCATIONS SHALL BE OF CAST VAPOR TIGHT TYPE.

(2) PULL BOXES CONNECTED TO CONCEALED CONDUITS SHALL BE PROVIDED WITH ACCESS BY MEANS OF AN APPROVED ACCESS DOOR.

(3) ALL PULL BOXES SHALL BE HOT DIPPED GALVANIZED STEEL.

B. INSTALLATION

(1) WHERE CONCEALED CONDUITS ARE TO BE CONNECTED TO A SURFACE WITH MOUNTED CABINET, A FLUSH CABINET BACKPLATE SHALL BE PROVIDED WITH AN ACCESSIBLE OPENING OF SIZE TO MATCH THE PULL BOX.

(2) EACH PULL BOX SHALL BE PROVIDED WITH CLAMPS, GRIDS OR OTHER SUPPORTS TO WHICH CABLES SHALL BE SECURED SO THAT NO CABLE WILL HAVE AN UNSUPPORTED LENGTH OF MORE THAN 30 INES.

(3) SHOULD THE UTILITY COMPANY OR ANY OTHER AGENCY REQUIRE BARRIERS BETWEEN GROUPS OF FEEDERS IN PULL BOXES, THEY SHALL BE PROVIDED.

C. OUTLET BOXES

(1) OUTLET BOXES SHALL BE GALVANIZED PRESSED STEEL, 4" SQUARE X 1-1/2" DEEP MINIMUM, WITH REQUIRED DEVICE RINGS. SECURE BOXES WITH BAR HANGERS. ADD SINGLE-GANG RING FOR ALL NEW COMMUNICATIONS OUTLETS.

(2) FLOOR BOXES SHALL BE OF THE CAST TYPE WITH THREADED CONDUIT ENTRIES FOR FLUSH DOOR MOUNTING WITH FLANGE FOR THE FLOOR MATERIAL SPECIFIED.

11. 600 VOLT WIRE AND CABLE

A. PROVIDE WIRE AND CABLE COMPRISED OF COPPER OR ALUMINUM CONDUCTORS, PER DRAWINGS, IN ACCORDANCE WITH ASTM AND IPCEA STANDARDS.

B. INSULATION SHALL BE TYPE RECOGNIZED BY NEC AS APPROVED FOR PARTICULAR APPLICATION, UNLESS A SPECIFIC TYPE IS SPECIFIED OR NOTED, WITH MINIMUM INSULATION RATINGS OR VALUES AS FOLLOWS:
(1) FEEDERS AND ALL BRANCH WIRING: TYPE THW, OR THHN, THWN OR XHHW.
(2) USE OF RWH OR SIMILARLY LISTED FIRE RATED CABLE IS ACCEPTABLE WHERE ALLOWED AND REQUIRED BY CODE.
(3) WIRING IN LIGHTING FIXTURE CHANNELS: TYPE THHN, OR OTHER RATED 90 DEGREE C OR GREATER, 600 VOLT.
(4) WIRING IN HIGH TEMPERATURE AREAS GREATER THAN 90 DEGREE C: TYPE AVA IN DRY LOCATIONS AND TYPE AVL IN WET, 600 VOLT.
(5) LOW VOLTAGE SWITCHING CIRCUITS AND CONTROL CABLES: 300 VOLT. WHERE IT CANNOT BE BARRIERED FROM HIGHER VOLTAGE SYSTEMS, PROVIDE 600 VOLT INSULATION.
(6) FLAME RETARDANT AND MOISTURE RESISTANT IN ELEVATOR MACHINE ROOMS, PER NEC ARTICLE 620.
(7) PROVIDE CONDUCTORS OF SAME INSULATION TYPE IF USED FOR A SIMILAR PURPOSE.

C. CONDUCTORS
(1) NO. 4 AWG AND SMALLER: COPPER ONLY.
(2) NO. 2 AWG AND LARGER BASED ON COPPER OR ALUMINUM.
(3) CONTRACTOR MAY SUBSTITUTE ALUMINUM FOR COPPER ON EQUAL AMPACITY BASIS. INCREASE CONDUIT SIZES ACCORDINGLY AND NOTE CHANGES ON "RECORD DRAWINGS."
(4) USE OF ALUMINUM CONDUCTORS FOR CONNECTION TO EQUIPMENT FURNISHED UNDER OTHER DIVISIONS SHALL NOT BE ALLOWED, UNLESS APPROVED BY THE TRADE THAT IS PROVIDING THE EQUIPMENT (I.E. MECHANICAL EQUIPMENT).
(5) THE MINIMUM SIZE CONDUCTOR SHALL BE NO. 12 AWG SOLID; NO. 6 AWG AND LARGER CONDUCTORS SHALL BE STRANDED.
(6) PROVIDE THE FOLLOWING MINIMUM WIRE SIZES, EXCEPT WHERE OTHERWISE NOTED ON DRAWINGS, OR SHOWN ON MANUFACTURER'S WIRING DIAGRAMS. ALL SIZES SHOWN ON DRAWINGS ARE FOR COPPER UNLESS SPECIFICALLY NOTED OTHERWISE:
- LOW VOLTAGE SWITCHING CIRCUITS: NO. 18 AWG.
- MISCELLANEOUS CONTROL OR SIGNAL CIRCUITS: SIZE AS REQUIRED BY MANUFACTURER'S RECOMMENDATIONS.
- BRANCH CIRCUITS: NO. 12 AWG, WHEN PROTECTED BY A 15- OR 20-AMP CIRCUIT BREAKER.
- IF DISTANCE FROM PANEL TO FIRST ELECTRICAL DEVICE IS 75 FEET OR GREATER FOR 120 VOLT CIRCUITS OR 150 FEET OR GREATER FOR 277 VOLT CIRCUITS, NO. 10 AWG WIRING SHALL BE INSTALLED.
- INCREASE CONDUCTOR SIZES TO NO.10 AWG TO OFFSET DERATING FACTOR WHERE MORE THAN SIX 20 AMP CONDUCTORS ARE INSTALLED IN SINGLE RACEWAY.
- CABLE FOR FIRE ALARM SYSTEMS AND OTHER SPECIAL INSTALLATIONS: AS DESCRIBED UNDER OTHER SECTIONS OF SPECIFICATIONS, NOTED ON DRAWINGS, OR RECOMMENDED BY MANUFACTURER.
- ALL WIRE SIZES ARE RATED FOR 75 DEGREE C TEMPERATURE UNLESS OTHERWISE NOTED. OTHER TEMPERATURE RATINGS SHALL NOT BE USED UNLESS WRITTEN APPROVAL IS GIVEN BY ENGINEER.

(1) WHERE MC TYPE FLEXIBLE CABLE IS INSTALLED IN LIEU OF WIRE AND CONDUIT, FULL-SIZE GROUND WIRE SHALL BE RUN WITH CURRENT CARRYING CONDUCTORS.
(2) SERVICE FEEDER AND BRANCH CIRCUIT CONDUCTORS THROUGHOUT THE ELECTRICAL SYSTEM SHALL BE COLOR CODED AS FOLLOWS:

277 VOLTS	120 VOLTS	PHASE
BROWN	BLACK	A
ORANGE	RED	B
YELLOW	BLUE	C
GREY	WHITE	NEUTRAL
GREEN	GREEN	GROUND

D. CABLE SPLICING AND TERMINATIONS
(1) SPLICES IN WIRE SIZES NO. 8 AWG AND SMALLER SHALL BE MADE WITH INSULATED SPRING TYPE WIRE CONNECTORS, "SCOTCHLOK".

(2) SPLICES IN LARGER WIRE AND CABLES SHALL BE MADE WITH INDENT CONNECTORS APPROVED FOR THE PURPOSE.

(3) ALL INSULATING TAPE USED ON 600 VOLTS AND LESS SHALL BE 3-M #88 OR PLYMOUTH SLIPKNOT GRAY.

(4) INSULATING MATERIALS FOR SPLICES AND CONNECTIONS SHALL BE OF THE TYPE FOR THE PARTICULAR USE, LOCATION, AND VOLTAGE AND SHALL BE APPLIED AND INSTALLED IN ACCORDANCE WITH THE MANUFACTURER'S RECOMMENDATIONS.

(5) ALUMINUM CONDUCTOR TERMINATIONS

- STRIP WIRE WITHOUT RINGING OR NICKING CONDUCTOR. REDO DAMAGED CONDUCTORS.
- JOINT COMPOUND: PREPARE WIRE IN ACCORDANCE WITH INSTRUCTIONS ON JOINT COMPOUND. DO NOT WIRE BRUSH PLATED LUGS. REMOVE EXCESS COMPOUND FROM ADJACENT INSULATING SURFACES BEFORE ENERGIZING SYSTEM.
- PROVIDE BURNDY HY-PLUG TYPE AYP OR SQUARE D TYPE CEP FOR ALL ALUMINUM FEEDER TERMINATIONS AT EQUIPMENT LUGS. ALLOW FOR EXTRA GUTTER SPACE AT EQUIPMENT WHERE ALUMINUM CONDUCTORS ARE USED.

E. INSTALLATION
(1) WIRES AND CABLES CONNECTED TO EQUIPMENT OPERATING AT 100 TO 480 VOLTS SHALL BE RATED AT 600 VOLTS MINIMUM. WHERE SPECIFIED OR WHERE THE OPERATING VOLTAGE IS LESS THAN 100 VOLTS, THE WIRES OR CABLES MAY BE INSULATED FOR 300 VOLTS, PROVIDED THEY ARE COMPLETELY ISOLATED FROM OTHER HIGHER VOLTAGE SYSTEMS.

(2) WIRES AND CABLES FOR SECONDARY SERVICE, FEEDERS AND BRANCH CIRCUIT SHALL BE SINGLE CONDUCTOR UNLESS OTHERWISE SPECIFIED.

(3) BRANCH CIRCUIT FEEDERS ROUTED UNDER RAISED FLOOR IN DATA ROOMS, COMPUTER ROOMS, ETC., SHALL BE UL RATED, SEAL-TIGHT TYPE FLEX CONDUIT PER NEC AND LOCAL CODES UNLESS OTHERWISE NOTED.

(4) PROVIDE SEPARATE NEUTRAL FOR ALL CIRCUITS.

F. IDENTIFICATION TAGS
(1) NON-FERROUS IDENTIFYING TAGS SHALL BE SECURELY FASTENED TO ALL CABLES IN PULL AND SPLICE BOXES AND AT TERMINATIONS. TAGS SHALL BE STAMPED OR EMBOSSED TO CORRESPOND WITH MARKINGS ON DRAWINGS OR MARKED SO THAT THE CABLE CAN BE READILY IDENTIFIED. IF SUSPEND TYPE TAGS ARE PROVIDED, THEY SHALL BE ATTACHED BY APPROXIMATELY 1/32 IN DIAMETER NYLON 55 POUND TEST MONOFILAMENT LINE ATTACHED TO TAG, USING THREE TWIST, CLIN KNOT OR ESPECIALLY DESIGNED SLIP-FREE PLASTIC CABLE LACING UNIT.

G. GENERAL WIRING METHODS
(1) CONDUCTORS NOT LARGER THAN NO. 10 AWG LOCATED IN PANELBOARDS, CABINETS, ETC., SHALL BE BUNDLED. CONDUCTORS LARGER THAN NO. 10 AWG LOCATED IN PANELBOARDS AND PULL BOXES SHALL BE CABLED AS INDIVIDUAL CIRCUITS. BUNDLING AND CABLING SHALL BE DONE WITH STRAPS MADE OF SELF-EXTINGUISHING NYLON. EACH STRAP SHALL BE CONSTRUCTED WITH A LOCKING HUB OR HEAD ON ONE END AND A TAPE ON THE OTHER.

(2) PROVIDE ALL WIRING TO AND BETWEEN MOTORS, STARTERS, LINE VOLTAGE CONTROL DEVICES, DISCONNECT SWITCHES AND OTHER RELATED ELECTRICAL EQUIPMENT EXCEPT WHERE SUCH ITEMS ARE FACTORY WIRED, OR EXISTING TO REMAIN.

(3) FEEDER, MAIN AND BRANCH CIRCUIT WIRING FOR POWER DISTRIBUTION, AND COMMON AND SECTION WIRES FOR THE SPECIAL SYSTEMS, SHALL BE TAGGED AND IDENTIFIED. NOMENCLATURE SHALL BE IN ACCORDANCE WITH SYMBOLS AND DESIGNATIONS SHOWN ON THE DRAWINGS OR AS DIRECTED BY THE ENGINEER.

12. GROUNDING

A. ALL ELECTRICAL INSTALLATIONS SHALL BE GROUNDED IN ACCORDANCE WITH THE ELECTRICAL CODE, LOCAL INSPECTION AUTHORITIES AND THE REQUIREMENTS OF THE ELECTRIC UTILITY.

B. A COMPLETE GROUNDING SYSTEM SHALL BE INSTALLED TO PROVIDE GROUNDING FOR EQUIPMENT, HOUSINGS, AND FRAMES IN THE PROPOSED INSTALLATION. THE GROUNDING SYSTEM IS TO BE CONNECTED TO THE EXISTING GROUNDING SYSTEM SERVING THIS PROJECT.

C. FLOATING CONDUIT GROUNDS ARE NOT ACCEPTABLE. ENSURE ALL FEEDERS (NEW AND EXISTING) ARE PROVIDED WITH APPROPRIATELY SIZED INSULATED GROUND WIRE, WHETHER NOTED OR NOT. IF NOTED, THE ELECTRICAL CONTRACTOR IS REQUIRED TO USE THE SIZE OF GROUND WIRE INDICATED ON DRAWINGS. THE GROUND WIRE SHALL BE CONNECTED FROM THE ELECTRICAL PANEL GROUNDED BUS BAR TO THE ELECTRICAL DEVICES. ENSURE FULL SIZE GROUND BUS HAS BEEN INSTALLED PER NEC IN ALL ELECTRICAL PANELS (NEW AND EXISTING). IF REQUIRED, PROVIDE GROUND BUS BAR KIT, AND CONNECT AS REQUIRED PER NEC. ARTICLE 250.

D. THE CONDUITS, PULL BOXES, JUNCTION BOXES AND EQUIPMENT SHALL BE CONNECTED WITH BONDING JUMPERS FASTENED TO CONDUIT BY MEANS OF GROUNDING BUSHINGS OR GROUND CLAMPS, TO MAINTAIN THE ELECTRIC CONTINUITY OF THE EQUIPMENT GROUNDING SYSTEM.

13. WIRING DEVICES

A. ALL ELECTRICAL WALL DEVICES (SWITCHES, RECEPTACLES, ETC.) SHALL BE BUILDING STANDARD AND 20A RATED UNLESS OTHERWISE SPECIFIED OR DIRECTED BY BUILDING ENGINEER. COLOR AND DEVICE TYPES SHALL BE APPROVED BY CHIEF BUILDING ENGINEER AND ARCHITECT PRIOR TO ORDERING.

B. NEW POWER, DATA AND COMMUNICATIONS DEVICES, FLUSH OR SURFACE MOUNTED ON WALLS, SHALL BE MOUNTED 18" A.F.F. (FROM FLOOR TO CENTERLINE OF THE BOX), AND ALL LIGHT SWITCHES SHALL BE MOUNTED 48" A.F.F., IN ORDER TO COMPLY WITH ADA REQUIREMENTS, UNLESS OTHERWISE NOTED ON ARCHITECTURAL DRAWINGS. REFER TO ARCHITECTURAL DRAWINGS PRIOR TO ROUGH-IN.

C. PROVIDE TAMPER-RESISTANT RECEPTACLES WHERE REQUIRED BY NEC AND LOCAL CODES.

D. WHERE MORE THAN ONE DEVICE IS BEING INSTALLED, PROVIDE MULTIPLE GANG DEVICE PLATES FOR NUMBER OF DEVICES AS REQUIRED.

E. ALL FACEPLATES SHALL BE BRUSHED STAINLESS STEEL, COLOR BY ARCHITECT.

F. WHERE BLANK COVERS ARE REQUIRED, PROVIDE BRUSHED STAINLESS STEEL, COLOR BY ARCHITECT.

G. BACK-TO-BACK OUTLETS IN THE SAME WALL AND THRU-WALL TYPE BOXES ARE NOT PERMITTED. PROVIDE NIPPLE (LENGTH AS REQUIRED) TO OFFSET FOR ALL OUTLETS SHOWN ON OPPOSITE SIDES OF A COMMON WALL TO MINIMIZE SOUND TRANSMISSION.

H. LABEL ALL RECEPTACLES WITH PANEL DESIGNATION AND CIRCUIT NUMBERS ON COVER PLATES ON OUTSIDE OF COVER PLATES. LABELS SHALL BE BLACK TEXT ON CLEAR SELF-ADHESIVE TAPE WITH MIN. 1/8" HIGH LETTERING.

I. ALL 125V, SINGLE PHASE, 15 AND 20 AMPERE RECEPTACLES EXISTING OR INSTALLED NEW IN KITCHENS/FOOD PREPARATION AREAS, AT VENDING MACHINES, AT EXTERIOR OF THE BUILDING OR WITHIN 6'-0" OF SINK SHALL HAVE GROUND-FAULT CIRCUIT-INTERRUPTER PROTECTION FOR PERSONNEL PER NEC REQUIREMENTS.

J. PROVIDE FIRE RATED WIREMOLD POKE-THRUS, SERIES RC7 FOR POWER AND SERIES RC9 FOR TELEPHONE/DATA, AT EACH FURNITURE SYSTEM SERVICE CONNECTION FOR POWER AND ANOTHER SEPARATE POKE-THRU FOR TELEPHONE/DATA AS SHOWN ON DRAWINGS, UNO. THE POWER POKE-THRU DEVICE SHALL BE PROVIDED WITH PROVISION OF A 3/4" POWER WHIP CONNECTION. CONDUIT AND THE PHONE/DATA POKE-THRU DEVICE SHALL BE PROVIDED WITH 2" CONDUIT SLEEVE FOR PHONE/DATA CABLING. REFER TO THE ARCHITECTURAL DRAWINGS FOR EXACT LOCATIONS PRIOR TO CORE DRILLING.

14. LIGHTING FIXTURES

A. PROVIDE ALL LIGHTING FIXTURES AS SPECIFIED BY ARCHITECT AND SHOWN ON DRAWINGS.

B. FOR VE/ALTERNATE FIXTURES RECOMMENDED BY THE CONTRACTOR, THE CONTRACTOR SHALL SHOW COMPLIANCE WITH UL, ENERGY MODEL/COMCHECK, DESIGNED FOOT CANDLE LEVELS AND ALL LEED REQUIREMENTS (IF APPLICABLE). THE CONTRACTOR SHALL SUBMIT ALL REQUIRED CALCULATIONS TO PROVE COMPLIANCE. FIXTURES SHALL HAVE VALID WARRANTIES THAT ARE COMPARABLE WITH THE BASIS OF DESIGN FIXTURES.

C. FURNISH AND INSTALL LIGHTING FIXTURES COMPLETE WITH LAMPS, BALLAST(S), AND REQUIRED MOUNTING HARDWARE. ELECTRICAL CONTRACTOR SHALL SUBMIT FIXTURE CUT SHEETS, WITHIN THREE WORKING DAYS AFTER PROJECT HAS BEEN AWARDED, TO ENGINEER AND ARCHITECT FOR THEIR FINAL APPROVAL PRIOR TO ORDERING THE FIXTURES. AFTER RECEIVING FINAL APPROVAL FROM ARCHITECT, LIGHT FIXTURES SHALL BE ORDERED WITHIN TWO WORKING DAYS. ELECTRICAL CONTRACTOR SHALL ALSO VERIFY QUANTITIES, MOUNTING REQUIREMENTS, FINISHES, FIXTURE AVAILABILITY AND LEAD TIME FOR DELIVERY TO SITE. WHERE LIGHTING FIXTURES ARE STOCKPILED IN THE BUILDING FOR USE, CONTRACTOR SHALL ARRANGE WITH BUILDING MANAGEMENT FOR PURCHASE OF SUCH FIXTURES FOR INSTALLATION ON THE PROJECT AS APPLICABLE.

D. LIGHTING FIXTURE COMPONENTS SHALL BE SUITABLE FOR THE VOLTAGE OF THE BUILDING CIRCUITS TO WHICH THEY ARE APPLIED.

E. ALL LIGHT FIXTURE LAMPS SHALL BE BUILDING STANDARD MANUFACTURE UNLESS OTHERWISE AUTHORIZED BY BUILDING ENGINEER IN WRITTEN FORM. VERIFY EXACT MANUFACTURE WITH BUILDING ENGINEER PRIOR TO ORDERING.

F. PROVIDE NEW HANGERS FOR NEW AND RELOCATED LIGHT FIXTURE LOCATIONS. PROVIDE NO LESS THAN TWO HANGERS UP TO STRUCTURE PER AHJ,NEC AND OWNER.

G. SUPPORT FIXTURES IN SUSPENDED CEILINGS BY SADDLE HANGERS OR TIE BARS ATTACHED TO RUNNERS OF CEILING SYSTEMS. LAY-IN FIXTURES SHALL BE PROVIDED WITH "EARTHQUAKE CLIPS".

H. ALL RECESSED FIXTURES SHALL BE CONNECTED TO THE BRANCH WIRING SYSTEM VIA A 6'-0" FLEXIBLE CONDUIT. A MAXIMUM OF FOUR (4) FIXTURES MAY BE CONNECTED TO A SINGLE OUTLET BOX.

I. SPLICES IN INTERNAL WIRING SHALL BE MADE WITH APPROVED INSULATED "WIRE NUT" TYPE MECHANICAL CONNECTORS, SUITABLE FOR THE TEMPERATURE AND VOLTAGE CONDITIONS TO WHICH THEY ARE SUBJECTED.

J. ALL PENDANT MOUNTED FIXTURES SHALL BE INSTALLED USING RIGID CONDUIT STEMS AND BALL ALIGNER TYPE CANOPIES. NO CHAINS WILL BE PERMITTED.

K. INDEPENDENTLY SUPPORT FLEXIBLE WIRING WHIPS FOR ALL NEW FIXTURES FROM THE GRID SUPPORT SYSTEM.

L. WHERE LIGHT FIXTURE LOCATIONS INTERFERE WITH DUCTWORK OR CEILING SUPPORTS, RELOCATE SUPPORTS. IF IMPOSSIBLE, CONTACT ARCHITECT OR ENGINEER. USE END CONNECTOR LIGHT FIXTURES UNDER LOW DUCTWORK.

M. ALL BUILDING STANDARD LIGHT FIXTURES AND EXIT SIGNS IN GOOD WORKING CONDITION THAT ARE NOT BEING REUSED SHALL BE RETURNED TO BUILDING OWNER FOR FUTURE USE.

N. ALL NEW BALLASTS SHALL BE ELECTRONIC AND 10% THD, UNLESS OTHERWISE DIRECTED BY BUILDING ENGINEER OR BUILDING MANAGEMENT IN WRITTEN FORM.

O. IF APPLICABLE TO THE BUILDING STANDARD EMERGENCY LIGHTING AND EXIT SIGN REQUIREMENTS, REPLACE ALL EXISTING BATTERY PACKS FOR EXISTING AND RELOCATED LIGHT FIXTURES AND EXIT SIGNS WITH 90-MINUTE BATTERY PACKS IN THE REMODELED AREA. IF NEW FIXTURES OR EXIT SIGNS ARE REQUIRED, ENSURE BATTERY PACKS ARE PROVIDED.

P. PROVIDE BATTERY PACKS FOR EMERGENCY LIGHTING AS REQUIRED PER CODE. BATTERY PACKS SHALL BE INSTALLED AND CONNECTED TO A NON-SWITCHED HOT LEG OF LIGHTING CIRCUIT SERVING THE RESPECTIVE AREA AND PER NEC REQUIREMENTS.

Q. INSPECT ALL EXISTING AND RELOCATED FIXTURES. RELAMP, CLEAN LENSES AND REPLACE ALL NECESSARY COMPONENTS AS REQUIRED TO MAINTAIN LIKE-NEW APPEARANCE THROUGHOUT SPACE.

R. ENSURE THAT ALL LAMPS HAVE THE SAME COLOR RENDERING INDEX (CRI) AND COLOR TEMPERATURE (KELVIN) AND ARE OF THE SAME BUILDING STANDARD MANUFACTURER THROUGHOUT THE REMODELED AREA. VERIFY COLOR RENDERING INDEX, COLOR TEMPERATURE, AND MANUFACTURER WITH BUILDING ENGINEER.

15. COMMUNICATIONS

A. EMPTY CONDUIT FOR NEW TEL/DATA OUTLETS IN PARTITIONS SHALL BE AS INDICATED ON DRAWINGS. A JUNCTION BOX, STUB-UP WITH AN INSULATED BUSHING SIX INES ABOVE BOTTOM OF HUNG CEILING AND DRAG WIRE SHALL BE PROVIDED IN EACH OUTLET LOCATION. COORDINATE SIZE AND QUANTITY OF JUNCTION BOX AND STUB-UP WITH VENDOR. ALL CABLE, CONNECTORS, OUTLETS AND FINAL CONNECTIONS ARE BY OTHERS.

B. CONDUIT SHALL BE MINIMUM 1", UNO

C. AT EACH FURNITURE MODULAR TELEPHONE AND DATA SERVICE POINT, ELECTRICAL CONTRACTOR SHALL PROVIDE 4" SQUARE X 2-1/8"JUNCTION BOX WITH TWO 1" CONDUITS (OR AS OTHERWISE SPECIFIED BY TELECOMMUNICATIONS CONTRACTOR), WITH PULL WIRE. STUB CONDUIT ABOVE CEILING LINE AND BUSH. CABLING SHALL BE PULLED BY OTHERS. COORDINATE ALL WORK WITH TELECOMMUNICATIONS CONTRACTOR PRIOR TO ROUGH-IN.

D. ALL DATA AND TELECOMMUNICATIONS CABLING SHALL BE INSTALLED BY TENANT'S VENDOR. THE ELECTRICAL CONTRACTOR SHALL BE RESPONSIBLE FOR COORDINATING JUNCTION BOX ROUGH-IN, CONDUIT RACEWAY'S, CONDUIT SLEEVE AND SIZE REQUIREMENTS WITH APPROPRIATE VENDOR PRIOR TO ROUGH-IN.

E. OUTLET BOXES SHALL BE GALVANIZED PRESSED STEEL, 4" SQUARE X 1-1/2" DEEP MINIMUM, WITH SINGLE GANG RINGS AND A 3/4" CONDUIT WITH PULL WIRE UNLESS OTHERWISE DIRECTED BY TELECOMMUNICATIONS CONTRACTOR OR TENANT. STUB CONDUIT 6" ABOVE CEILING LINE AND BUSH. VERIFY WITH TELECOMMUNICATION CONTRACTOR EXACT REQUIREMENTS PRIOR TO ROUGH-IN.

F. ELECTRICAL CONTRACTOR SHALL VERIFY QUANTITY OF DATA/PHONE PORTS TO BE INCLUDED IN POKE-THRU DEVICE WITH TELECOMMUNICATIONS CONTRACTOR AND PROVIDE APPROPRIATE POKE-THRU DEVICES PRIOR TO ORDERING.

G. ALL TEL/DATA INSTALLATIONS SHALL BE COORDINATED WITH THE RESPECTIVE VENDOR PRIOR TO INSTALLATION.

16. FIRE ALARM

A. GENERAL CONTRACTOR SHALL SOLICIT BIDS FROM BUILDING OWNER'S DESIGNATED FIRE ALARM CONTRACTOR FOR DESIGN AND INSTALLATION OF AN APPROVED FIRE ALARM SYSTEM AND DEVICES WHICH SHALL COMPLY WITH ALL APPLICABLE CODES AND ALL REQUIREMENTS OF AUTHORITIES HAVING JURISDICTION. GENERAL CONTRACTOR TO VERIFY WITH BUILDING MANAGEMENT CONCERNING DESIGNATED FIRE ALARM CONTRACTOR PRIOR TO BIDING.

B. REQUIRED MODIFICATIONS TO EXISTING FIRE ALARM SYSTEM SHALL BE PROVIDED ON A DESIGN/BUILD BASIS BY FIRE ALARM CONTRACTOR.

C. PRIOR TO BIDDING, FIRE ALARM CONTRACTOR SHALL FIELD VERIFY EXISTING FIRE ALARM SYSTEM CAPABILITY AND FIRE ALARM DEVICE LOCATIONS IN THIS SCOPE OF WORK. IF REQUIRED BY LOCAL JURISDICTION, FIRE ALARM SYSTEM SHALL BE UPGRADED TO MEET CURRENT CODES.

D. IF REQUIRED, RELOCATE EXISTING SMOKE DETECTORS, REMOTE INDICATOR LIGHTS, FIRE ALARM HORNS, STROBES, SPEAKERS, ETC., BASED ON REMODELED AREA MODIFICATION. RECONNECT RELOCATED DEVICES TO EXISTING SYSTEM AS REQUIRED. ALL NEW FIRE ALARM DEVICES SHALL BE OF THE SAME MANUFACTURER AS THE EXISTING DEVICES AND SHALL BE COMPATIBLE WITH EXISTING FIRE ALARM SYSTEM. PROVIDE ALL ADDITIONAL CONDUCTORS, ZAM'S, IAM'S AND OTHER EQUIPMENT NECESSARY IN ORDER TO EXPAND SYSTEM AS REQUIRED. PROVIDE SYNCHRONIZING MODULES FOR STROBES. IF REQUIRED, REPLACE EXISTING FIRE ALARM DEVICES THAT ARE NOT CURRENTLY BUILDING STANDARD OR COMPATIBLE WITH NEW BUILDING STANDARD FIRE ALARM DEVICES.

E. PROVIDE NEW BUILDING STANDARD FIRE ALARM STROBES, ADA HIGH INTENSITY, COMPATIBLE WITH EXISTING OR NEW FIRE ALARM SYSTEM. MODIFY EXISTING ALARM CIRCUIT CONDUCTORS AND FIRE ALARM PANEL PER MANUFACTURER'S REQUIREMENTS.

F. REPLACE EXISTING STROBE LIGHTS WITH NEW BUILDING STANDARD COLOR STROBE LIGHTS AND ENSURE ALL STROBE LIGHTS ARE SYNCHRONIZED.

G. PRIOR TO PURCHASING FIRE ALARM DEVICES, FIRE ALARM CONTRACTOR SHALL PREPARE AND SUBMIT ALL SHOP DRAWINGS, EQUIPMENT BROCHURES, AND SEQUENCE OF OPERATION TO ALL AUTHORITIES HAVING JURISDICTION, SUCH AS FIRE DEPARTMENT, BUILDING DEPARTMENT, ETC., AS REQUIRED, FOR REVIEW AND APPROVAL. CONTRACTOR SHALL ALSO PROVIDE THE ENGINEER WITH ONE (1) SET OF DRAWINGS, CALCULATIONS AND EQUIPMENT SUBMITTALS, FOR REVIEW AND RECORDS.

H. WALL-MOUNTED STROBES SHALL BE MOUNTED SUCH THAT THE ENTIRE LENS IS NOT LESS THAN 80" AND NOT GREATER THAN 96 IN. ABOVE THE FINISHED FLOOR. WHERE LOW CEILING HEIGHTS DO NOT PERMIT WALL MOUNTING AT A MINIMUM OF 80" STROBE SHALL BE MOUNTED WITHIN 6".

I. FIRE ALARM AND MECHANICAL CONTRACTOR SHALL FURNISH DUCT DETECTORS (120V OR 24V), WITH REMOTE INDICATING LIGHT AND TEST SWITCH, FOR ALL MECHANICAL AIR-MOVING SYSTEMS WHERE REQUIRED BY CODE OR LOCAL AUTHORITIES. DETECTORS SHALL BE OF THE SAME MANUFACTURER OF THE EXISTING FIRE ALARM SYSTEM. MECHANICAL CONTRACTOR SHALL INSTALL DETECTORS FOR FAN UNITS IN THE MECHANICAL DUCTWORK TO FACILITATE MOTOR SHUTDOWN UPON DETECTION OF SMOKE. ELECTRICAL CONTRACTOR SHALL HARDWIRE DETECTOR TO THE FAN MOTOR (THROUGH A POWER-INTERRUPTING RELAY) FOR SHUTDOWN UPON DETECTION OF SMOKE; AND IF REQUIRED BY CODE, THE FIRE ALARM CONTRACTOR SHALL CONNECT TO FIRE ALARM SYSTEM AS TROUBLE ALARM. COORDINATE ALL REQUIREMENTS AND SPECIFICATIONS WITH BUILDING ENGINEER OR BUILDING FIRE ALARM REPRESENTATIVE. SUBMIT DRAWINGS AND EQUIPMENT CUT SHEETS FOR ENGINEER'S REVIEW AND FIRE DEPARTMENT APPROVAL.

J. IF A PRE-ACTION DRY-PIPE FIRE SPRINKLER SYSTEM IS REQUIRED FOR THIS PROJECT, CONNECT THE PRE-ACTION FIRE ALARM SYSTEM CONTROL PANEL TO BE ANNUNCIATED ON THE BUILDING MAIN FIRE ALARM CONTROL PANEL (FACP) IN THE FIRE COMMAND CENTER.

K. IF THE PROJECT REQUIRES A UPS SYSTEM AND COMPUTER ROOM AIR CONDITIONING (CRAC) UNITS, THE UPS SYSTEM AND CRAC UNITS SHALL BE CONNECTED TO THE BUILDING FIRE ALARM SYSTEM AND TO THE PRE-ACTION FIRE ALARM CONTROL PANEL. THE UPS SYSTEM AND CRAC UNITS SERVING THE COMPUTER ROOM WILL BE SHUT DOWN UPON ACTIVATION OF FIRE ALARM SYSTEM. PROVIDE INTERFACE WIRING AS REQUIRED. PROVIDE WIRING FROM CRAC UNIT TO MOISTURE SENSORS OR SITE LINK IF IT IS PROVIDED UNDER MECHANICAL CONTROL AND ALARM SECTION. THE CRAC UNITS SHALL SHUT DOWN AND ALARM UPON DUCT DETECTOR ACTIVATION AS PART OF UL SYSTEM. COORDINATE ALL OF THE ABOVE WITH APPROPRIATE UPS, PDU AND CRAC UNIT MANUFACTURERS.

17. SECURITY

A. ELECTRICAL CONTRACTOR SHALL COORDINATE EXACT LOCATIONS AND REQUIREMENTS FOR ALL JUNCTION BOX ROUGH-INS, CONDUIT RUNS WITH PULL WIRE AND POWER REQUIREMENTS FOR SECURITY SYSTEM WITH SECURITY CONTRACTOR PRIOR TO ROUGH-IN. THE FIRE ALARM CONTRACTOR SHALL ALSO COORDINATE WITH SECURITY CONTRACTOR FOR INTERFACING SECURITY SYSTEM WITH FIRE ALARM SYSTEM AS REQUIRED PER LOCAL CODES AND FIRE DEPARTMENT.

TRUE NORTH PROJECT NORTH

Clic. DESIGN STUDIO

50 SOUTH STEELE STREET, DENVER, CO 80209

FOUNDERS + PRINCIPALS
RENE STREMEL | 303.437.4956 |
RENE@CLICDESIGNSTUDIO.COM
SARAH MCGARRY | 303.915.4314 |
SARAH@CLICDESIGNSTUDIO.COM

© COPYRIGHT 2022
ANY UNAUTHORIZED USE OF THESE DOCUMENTS IS PROHIBITED WITHOUT THE WRITTEN CONSENT OF CLIC DESIGN STUDIO.

CMTA
A LEGENCE Company
formerly KLOK Group

NOT FOR CONSTRUCTION

THRIVING FAMILIES
191 Yuma St, Denver CO, 80223

ISSUANCE:	DATE
FOR CONSTRUCTION	2024.04.10

REVISION	DATE

PROJECT NUMBER: 20XXX

SHEET TITLE: SPECIFICATIONS

SHEET NUMBER: E0.02

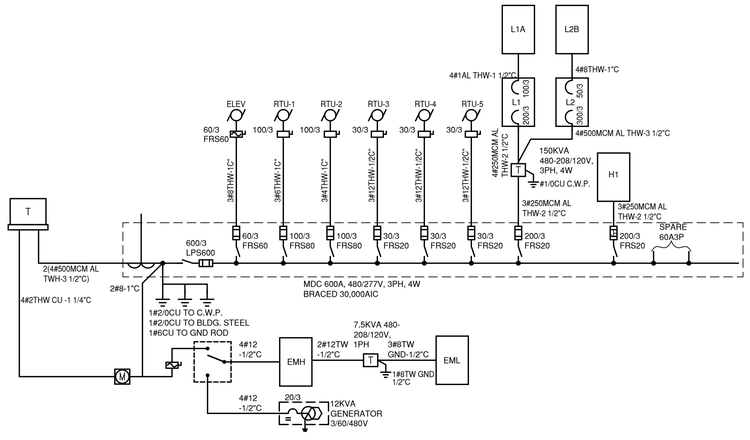

1 ELECTRICAL ONE-LINE DIAGRAM
SCALE NONE

TRUE NORTH PROJECT NORTH

Clic.
DESIGN STUDIO

50 SOUTH STEELE STREET, DENVER, CO 80209

FOUNDERS + PRINCIPALS
RENE STREMEL | 303.437.4956 |
RENE@CLICDESIGNSTUDIO.COM
SARAH MCGARRY | 303.915.4314 |
SARAH@CLICDESIGNSTUDIO.COM

© COPYRIGHT 2022
ANY UNAUTHORIZED USE OF THESE DOCUMENTS IS PROHIBITED WITHOUT THE WRITTEN CONSENT OF CLIC DESIGN STUDIO.

CMTA
A LEGENCE Company
formerly KLOK Group

NOT FOR CONSTRUCTION

THRIVING FAMILIES
191 Yuma St, Denver CO, 80223

ISSUANCE:	DATE
FOR CONSTRUCTION	2024.04.10

REVISION	DATE

PROJECT NUMBER: 20XXX

SHEET TITLE:
ELECTRICAL ONE-LINE DIAGRAM

SHEET NUMBER:
E0.03

GENERAL NOTES:

1. THE ELECTRICAL CONTRACTOR SHALL COORDINATE WITH THE GENERAL CONTRACTOR PRIOR TO THE START-UP OF THE CONSTRUCTION PROJECT FOR RULES AND REGULATIONS. REFER TO BUILDING STANDARDS, SAFETY, NEC, LOCAL, AND OTHER APPLICABLE CODES.
2. THE ELECTRICAL DRAWINGS ARE DIAGRAMMATIC ; LOCATIONS SHOWN FOR ELECTRICAL EQUIPMENT, DEVICES, CIRCUITING, FIXTURES, ETC., ARE APPROXIMATE. THE ELECTRICAL CONTRACTOR IS RESPONSIBLE FOR COORDINATING EXACT LOCATIONS WITH ARCHITECTURAL PLANS, ELEVATIONS, DETAILS, AND MILLWORK SHOP DRAWINGS. ALL DIMENSIONS ARE TO BE TAKEN OFF THE ARCHITECTURAL PLANS OR THE MANUFACTURER'S SHOP DRAWINGS. DO NOT SCALE OFF THE ELECTRICAL PLANS.
3. UPON COMPLETION OF THE PROJECT, THE OWNER SHALL BE ISSUED WITH UPDATED PANEL SCHEDULES, AS-BUILT DRAWINGS, CATALOG CUTS SHEETS, WARRANTIES, AND OPERATING INSTRUCTIONS FOR ANY INSTALLED EQUIPMENT. THIS SHALL BE ISSUED PRIOR TO THE LAST PAYMENT. REFER TO SPECIFICATIONS FOR ADDITIONAL INFORMATION.
4. REFER TO SPECIFICATIONS FOR ADDITIONAL INFORMATION AND REQUIREMENTS. ELECTRICAL CONTRACTOR SHALL COMPLY WITH THE SPECIFICATIONS UNLESS OTHERWISE DIRECTED BY THE ENGINEER IN WRITTEN FORM.
5. ENSURE THAT ALL NEW DEVICES ARE INSTALLED PLUMB, SQUARE, AND AT THE REQUIRED HEIGHTS. REFER TO DETAILS, ARCHITECTURAL DRAWINGS, AND APPLICABLE CODES FOR HEIGHT REQUIREMENTS.
6. ENSURE THAT ALL CEILING-MOUNTED DEVICES ARE CENTERED IN CEILING TILES. IF A CONFLICT OCCURS, CONTACT THE DESIGN TEAM.
7. THE ELECTRICAL CONTRACTOR SHALL REFER TO ARCHITECTURAL PLANS AND FIELD VERIFY WITH THE APPROPRIATE MILLWORK CONTRACTOR TO COORDINATE THE FINAL LOCATION OF ALL DEVICES, AND THE EXACT HEIGHT, LOCATION, AND ROUTING OF CONDUIT PRIOR TO ROUGH-IN.
8. ALL CONDUIT RUNS SHALL BE RUN PERPENDICULAR AND PARALLEL TO COLUMNS AND BEAMS. ALL EXPOSED RACEWAYS ARE TO BE INSTALLED PARALLEL OR PERPENDICULAR TO WALLS OR STRUCTURAL MEMBERS SUCH THAT THEY FOLLOW STRUCTURAL SURFACE CONTOURS AND DO NOT OBSTRUCT PASSAGEWAYS OR ACCESS TO EQUIPMENT. MULTIPLE RACEWAYS SHOULD BE INSTALLED GROUPED TOGETHER. THE LOCATION OF PUBLICLY VISIBLE RACEWAYS SHALL BE APPROVED BY THE DESIGN TEAM PRIOR TO INSTALLATION. EXTRA TIME SHOULD BE ALLOWED FOR THIS REVIEW AND APPROVAL.
9. PROVIDE FIRESTOPPING PER ARCHITECTURAL AND ELECTRICAL SPECIFICATIONS OR AS REQUIRED BY AHJ IN COMPLIANCE WITH ASTME 814 AND UL STANDARDS.
10. ALL WORK AFFECTING BUSINESS AND BUILDING OPERATIONS SHALL BE COORDINATED WITH OWNER.
11. CONTRACTOR TO COORDINATE FIRE ALARM DEVICE LOCATIONS WITH ALL TRADES, INITIATING DEVICES SUCH AS SMOKE, HEAT, AND CARBON MONOXIDE DETECTORS/ALARMS SHALL BE INSTALLED PER CODE AND A MINIMUM OF 3 FEET AWAY FROM HEATING ELEMENTS.
12. FIRE ALARM ARE DEVICES SHOWN FOR REFERENCE ONLY. A COMPLETE FIRE ALARM SYSTEM SHALL BE PROVIDED AS DESIGNED BY THE FIRE ALARM CONTRACTOR, AN APPROVED FIRE ALARM SYSTEM SHALL COMPLY WITH ALL APPLICABLE CODES AND ALL REQUIREMENTS OF AUTHORITIES HAVING JURISDICTION.

ONE-LINE - GENERAL NOTES:

1. NOT ALL RISER OFFSETS OR SUPPORT BOXES ARE SHOWN. THE CONTRACTOR SHALL PROVIDE OFFSETS AND SUPPORT BOXES AS REQUIRED. THE CONTRACTOR IS RESPONSIBLE FOR DETERMINING FIELD CONDITIONS AND INCLUDING ALL NECESSARY OFFSET COSTS IN THE BID PRICE.
2. CONDUIT SEGMENTS ARE SHOWN ON ONE-LINES FOR REFERENCE ONLY. CONTRACTOR TO DETERMINE AND PROVIDE FINAL ROUTING.
3. REFER TO FEEDER TABLE FOR FEEDER AND CONDUIT SIZES.
4. REFER TO TRANSFORMER TABLE FOR FEEDER AND CONDUIT SIZES.
5. THE ELECTRICAL CONTRACTOR SHALL ENSURE THAT VOLTAGE DROP FOR FEEDERS TO DISTRIBUTION EQUIPMENT DOES NOT EXCEED 2%. VOLTAGE DROP IN BRANCH CIRCUITING DOES NOT EXCEED 3%. OVERALL VOLTAGE DROP SHALL BE MAXIMUM OF 5%. INDICATED FEEDER LENGTHS ARE FOR DESIGN PURPOSES ONLY. THE CONTRACTOR SHALL CONFIRM FINAL FEEDER LENGTHS.
6. INDICATED FEEDER LENGTHS IN SHORT CIRCUIT CALCULATIONS ARE FOR DESIGN PURPOSES ONLY. FINAL FEEDER LENGTHS AND EQUIPMENT INTERRUPTING RATINGS SHALL BE CONFIRMED BY THE CONTRACTOR AND PROVIDED IN THE SUBMITTAL.
7. CONTRACTOR SHALL PROVIDE SUITABLE LUGS WITH APPROPRIATE SIZE AND TEMPERATURE RATING FOR TERMINATIONS FOR ALL EQUIPMENT.
8. PROVIDE FULL BUSSING FOR ALL SPACES INDICATED ON PANELBOARDS AND DISTRIBUTION BOARDS.
9. CONNECT ALL TRANSFORMER GROUNDING ELECTRODES TO THE GROUND BUS RISER.
10. THE CONTRACTOR SHALL FIELD VERIFY EXISTING CONDITIONS TO DETERMINE NECESSARY WORK.
11. FOR EXISTING PANELBOARD REPLACEMENTS, THE CONTRACTOR IS RESPONSIBLE FOR ALL ASSOCIATED WORK. THIS INCLUDES NEW JUNCTION BOXES, WIRE GUTTER, SPLICES, ETC. AS NEEDED TO PERFORM THIS WORK. THE CONTRACTOR SHALL VISIT THE SITE BEFORE BID AND INCLUDE ALL NECESSARY WORK IN THE BID PRICE.
12. ALL WORK INDICATED ON ONE-LINES IS NEW UNLESS OTHERWISE NOTED.

POWER - GENERAL NOTES:

1. THE ELECTRICAL CONTRACTOR SHALL PROVIDE PRINTED LABELS FOR ALL ELECTRICAL RECEPTACLES AND SWITCHES WITH PANEL DESIGNATION AND CIRCUIT NUMBER ON THE COVER PLATE. COORDINATE LABEL PLACEMENT WITH OWNER. REFER TO SPECIFICATIONS AND DETAILS FOR ADDITIONAL INFORMATION.
2. THE ELECTRICAL CONTRACTOR SHALL REFER TO OTHER DESIGN TEAM DRAWINGS FOR LOCATIONS OF OWNER'S EQUIPMENT AND FURNITURE SYSTEMS. THE ELECTRICAL CONTRACTOR SHALL VERIFY FINAL FIELD CONDITIONS AND COORDINATE THE EXACT LOCATION WITH THE APPROPRIATE CONTRACTOR PRIOR TO ROUGH-IN.
3. PRIOR TO X-RAYING/GPR SCANNING, CHOPPING, OR CORE-DRILLING, THE ELECTRICAL CONTRACTOR SHALL COORDINATE AND SCHEDULE WITH THE OWNER. REFER TO SPECIFICATIONS FOR ADDITIONAL INFORMATION.
4. WHERE DISCONNECTS ARE INDICATED IN DRAWINGS, CONTRACTOR SHALL PROVIDE FINAL CONNECTION FROM DISCONNECT TO THE EQUIPMENT BEING SERVED.
5. ALL BACK BOXES SHALL BE FLUSH MOUNTED UNLESS OTHERWISE NOTED. ALL VERTICAL SECTIONS OF CONDUIT SHALL BE CONCEALED. THE CONTRACTOR SHALL COORDINATE THE INSTALLATION OF CONDUIT AND BACK BOXES IN CONCRETE, MASONRY, AND GYP. WALLS.
6. ALL DATA/TELECOMMUNICATIONS CABLING SHALL BE INSTALLED UNDER SEPARATE CONTRACT. THE ELECTRICAL CONTRACTOR SHALL COORDINATE JUNCTION BOX SIZES, CONDUIT SIZES, POWER REQUIREMENTS, AND EXACT LOCATIONS WITH THE COMMUNICATION CONTRACTOR PRIOR TO ROUGH-IN.
7. ALL SECURITY SYSTEM CABLING SHALL BE INSTALLED UNDER SEPARATE CONTRACT. THE ELECTRICAL CONTRACTOR SHALL COORDINATE JUNCTION BOX SIZES, CONDUIT SIZES, POWER REQUIREMENTS, AND EXACT LOCATIONS WITH THE SECURITY CONTRACTOR PRIOR TO ROUGH-IN. IF APPLICABLE, THE SECURITY SYSTEM SHALL INTERFACE WITH THE FIRE ALARM SYSTEM.
8. ALL AV SYSTEM CABLING SHALL BE INSTALLED UNDER SEPARATE CONTRACT. THE ELECTRICAL CONTRACTOR SHALL COORDINATE JUNCTION BOX SIZES, CONDUIT SIZES, POWER REQUIREMENTS, AND EXACT LOCATIONS WITH THE AV CONTRACTOR PRIOR TO ROUGH-IN.
9. ALL CONDUIT FOR LOW VOLTAGE SYSTEMS SHALL BE PROVIDED WITH PULL WIRE AND CONDUIT BUSHING.
10. THE ELECTRICAL CONTRACTOR SHALL COORDINATE ALL MECHANICAL/PLUMBING/FIRE PROTECTION EQUIPMENT LOCATIONS FOR POINTS OF CONNECTION WITH APPROPRIATE CONTRACTOR PRIOR TO ROUGH-IN. REFER TO MEP SCHEDULES, SPECIFICATIONS, AND SUBMITTALS FOR ADDITIONAL INFORMATION.
11. EXACT LOCATIONS AND QUANTITIES OF FIRE/SMOKE AND MOTORIZED DAMPERS SHALL BE COORDINATED WITH MECHANICAL DRAWINGS.
12. AREAS OF DRYWALL CEILING SHALL BE COORDINATED SUCH THAT ACCESS PANELS ARE NOT REQUIRED. ELEMENTS REQUIRING ACCESS SHOULD BE LOCATED IN ACCESSIBLE CEILING. GENERAL CONTRACTOR SHALL COORDINATE WITH ARCHITECT PRIOR TO ORDERING OR INSTALLATION.
13. ALL DEVICES LISTED IN NEC 210.8 (A) THROUGH (F) SHALL BE PROVIDED WITH GFCI PROTECTION. PROVIDE A REMOTE GFCI DEVICE OR CIRCUIT BREAKER FOR ALL INACCESSIBLE DEVICES. LABEL REMOTE GFCI DEVICE INDICATING EQUIPMENT BEING PROTECTED. SEE NEC 210.8 FOR ADDITIONAL INFORMATION.
14. ELECTRICAL CONDUITS LOCATED IN MECHANICAL SHAFTS SHALL BE COORDINATED WITH DUCTS, PIPING, AND ACCESS PANELS.
15. FOR MEETING ROOMS, PROVIDE RECEPTACLES AS DESIGNED TO COMPLY WITH NEC 210.65.
16. ALL EXISTING POWER RECEPTACLES AND DATA OUTLETS SHALL BE PROVIDED WITH NEW COVER PLATES TO MATCH NEW OUTLETS.

LIGHTING - GENERAL NOTES:

1. ALL LIGHTING FIXTURES SHALL BE POSITIVELY ATTACHED TO THE STRUCTURE PER IBC, UBC, AND NEC.
2. INSPECT ALL EXISTING AND RELOCATED FIXTURES. RELAMP, CLEAN LENSES AND REPLACE ALL NECESSARY COMPONENTS AS REQUIRED TO MAINTAIN LIKE-NEW APPEARANCE THROUGHOUT SPACE.
3. ENSURE THAT ALL LAMPS HAVE THE SAME COLOR TEMPERATURE (KELVIN) THROUGHOUT.
4. WHERE LIGHT FIXTURE LOCATION INTERFERES WITH DUCTWORK OR CEILING SUPPORTS, CONTACT THE DESIGN TEAM FOR WORK COORDINATION. COORDINATE INSTALLATION WITH APPROPRIATE CONTRACTOR.
5. LOWERCASE LETTER ADJACENT TO SWITCH INDICATES CONTROL OF LIGHT FIXTURES WITH MATCHING LOWERCASE LETTER. WHERE NO LOWERCASE LETTERING IS SHOWN (EITHER ON THE FIXTURE OR ADJACENT TO SWITCHES), THE SWITCH IS ASSUMED TO BE DEDICATED TO THE FIXTURES IN THE LOCAL/CONFINED AREA.
6. THE ELECTRICAL CONTRACTOR SHALL COORDINATE ALL FINAL LIGHT SWITCH LOCATIONS AND MOUNTING HEIGHTS WITH THE ARCHITECT PRIOR TO ROUGH-IN.
7. THE ELECTRICAL CONTRACTOR SHALL FIELD VERIFY EXACT FIXTURE LENGTHS FOR ALL CONTINUOUS LINEAR FIXTURES.
8. THE ELECTRICAL CONTRACTOR SHALL COORDINATE WITH THE APPROPRIATE CONTRACTOR FOR THE PLACEMENT OF FIXTURES IN MEPT ROOMS TO PROVIDE UNIFORM LIGHT LEVELS. 40% OF ALL FIXTURES SHALL BE PROVIDED WITH BATTERIES/ON EMERGENCY POWER. PROVIDE MOUNTING HARDWARE AS REQUIRED.

DEMOLITION - GENERAL NOTES:

1. PRIOR TO BID, THE CONTRACTOR SHALL VERIFY ALL WORK ASSOCIATED WITH EXISTING CONDITIONS TO DETERMINE NECESSARY WORK. ANY DISCREPANCIES OBSERVED ON SITE SHALL BE BROUGHT UP TO THE ARCHITECT'S AND ENGINEER'S ATTENTION PRIOR TO BID.
2. UP-TO-DATE AS-BUILT ELECTRICAL PLANS ARE NOT AVAILABLE FOR THIS BUILDING. INFORMATION FOR THE EXISTING CIRCUITRY IS BASED ON EXISTING PANEL DIRECTORIES, AVAILABLE DRAWINGS, AND ASSUMPTIONS. IF SIGNIFICANT DISCREPANCIES ARE FOUND THAT CANNOT BE EASILY RESOLVED, CONTACT THE ARCHITECT OR ENGINEER.
3. REFER TO OTHER DISCIPLINES, IF APPLICABLE, FOR ADDITIONAL DEMOLITION INFORMATION INCLUDING AREAS TO BE DEMOLISHED.
4. ALL CIRCUIT BREAKERS THAT ARE SPARES SHALL BE TURNED OFF AND SHALL BE MARKED ON THE REVISED PANEL DIRECTORIES.
5. THE CONTRACTOR SHALL DEMOLISH ALL UNUSED POWER FEEDERS, PHONE/DATA CABLING, CABLE SUPPORTS, CONDUIT, JUNCTION BOXES, AND ASSOCIATED WIRING LOCATED IN THE CEILING, WALL, AND FLOOR SPACES BACK TO POINT OF ORIGIN, UNLESS OTHERWISE NOTED. COORDINATE WITH THE APPROPRIATE CONTRACTOR FOR EQUIPMENT DEMOLISHED WITHIN THEIR SCOPE. FOR ANY EXISTING CONDUIT/CABLING TO REMAIN, PROVIDE SUPPORTS PER CODE.
6. THE ELECTRICAL CONTRACTOR SHALL MAINTAIN CONTINUITY OF EXITING CIRCUIT FOR EXISTING TO REMAIN DEVICES, UNLESS OTHERWISE NOTED.
7. ALL MATERIAL AND EQUIPMENT THAT HAS BEEN REMOVED SHALL BE HELD FOR DISPOSAL AS DIRECTED BY THE OWNER.
8. ALL EXISTING FIRE ALARM DEVICES SHALL REMAIN OPERATIONAL DURING DEMOLITION AND CONSTRUCTION. PROVIDE TEMPORARY SUPPORTS AND ADEQUATE PROTECTION DURING DEMOLITION AND CONSTRUCTION.
9. WORK OUTSIDE OF PRIMARY AREAS OF WORK SHALL BE COORDINATED WITH THE OWNER.

TRUE NORTH PROJECT NORTH

Clic. DESIGN STUDIO

50 SOUTH STEELE STREET, DENVER, CO 80209

FOUNDERS + PRINCIPALS
RENE STREMEL | 303.437.4956 | RENE@CLICDESIGNSTUDIO.COM
SARAH MCGARRY | 303.915.4314 | SARAH@CLICDESIGNSTUDIO.COM

© COPYRIGHT 2022
ANY UNAUTHORIZED USE OF THESE DOCUMENTS IS PROHIBITED WITHOUT THE WRITTEN CONSENT OF CLIC DESIGN STUDIO.

CMTA
A LEGENCE Company
formerly KLOK Group

NOT FOR CONSTRUCTION

THRIVING FAMILIES
191 Yuma St, Denver CO, 80223

ISSUANCE:	DATE
FOR CONSTRUCTION	2024.04.10

△	REVISION	DATE

PROJECT NUMBER: 20XXX

SHEET TITLE:
ELECTRICAL NOTES

SHEET NUMBER:
E0.04

PANEL H1

Mounting Method: SURFACE
Panel Status: EXISTING TO REMAIN
Fed From: Panel Options
Panel Information: Volt: 480/277 | Phase: 3 | Wire: 4 | Bus Rating: 200 AMP | Main Breaker: MLO | AIC Rating: 14,000

Ckt #	Notes	Code	Description	Load VA	Bkr	P	Ph A	Ph B	Ph C	P	Bkr	Load VA	Description	Code	Notes	Ckt #
1		1	SITE LIGHTING	2300	20	1	•			1	20		SPARE	6		2
3		1	LIGHTING	3400	20	1		•		1	20	4000	LIGHTING	1		4
5		1	LIGHTING	3500	20	1			•	1	20	3100	LIGHTING	1		6
7		1	LIGHTING	1800	20	1	•			1	20	3800	LIGHTING	1		8
9		1	LIGHTING	2680	20	1		•		3	20	3300	CUH-1	4		10
11		4	CUH-2	3300	20	3			•		/	3300		4		12
13		4		3300	/		•				/	3300		4		14
15		4		3300	/			•		3	20	1700	UH-2	4		16
17		4	CUH-3,4	3300	20	3			•		/	1700		4		18
19		4		3300	/		•				/	1700		4		20
21		4		3300	/			•		3	20	1700	UH-3	4		22
23		4	UH-1	3300	20	3			•		/	1700		4		24
25		4		3300	/		•				/	1700		4		26
27		4		3300	/			•			-		SPACE			28
29		3	V1	1920	15	3			•	1	20	3340	LIGHTING	1		30
31		3		1920	/		•			1	20	1646	LIGHTING - SOUTH		A,B	32
33		3		1920	/			•		1	20	2082	LIGHTING - NORTH		A,B	34
35		3	V2	1920	15	3			•		-		SPACE			36
37		3		1920	/		•				-		SPACE			38
39		3		1920	/			•			-		SPACE			40
41			SPACE		-				•		-		SPACE			42

Code	Description	Load VA	Dem
1	Lighting & Car Chargers	27920	125%
2	Rec up to 10,000		100%
	Rec over 10,000		50%
3	Motor	9600	100%
	Largest Motor	1920	125%
4	Heater	49800	100%
5	Kitchen		100%
6	Other		100%
7	Sub Panel		100%

Load Summary

Per Phase			
Ph A	16359	VA	
Ph B	18975	VA	
Ph C	16753	VA	
Connected			89240 VA
Code Demand			96700 VA
Code Demand			116.45 Amps

NOTES:
A REVISED LOAD IN EXISTING PANEL
B PROVIDE NEW BREAKER IN EXISTING PANEL
C
D

PANEL L2B

Mounting Method: SURFACE
Panel Status: EXISTING TO REMAIN
Fed From: 150KVA TRANSFORMER
Panel Options
Panel Information: Volt: 208/120 | Phase: 3 | Wire: 4 | Bus Rating: 100 AMP | Main Breaker: MLO | AIC Rating: 10,000

Ckt #	Notes	Code	Description	Load VA	Bkr	P	Ph A	Ph B	Ph C	P	Bkr	Load VA	Description	Code	Notes	Ckt #
1		3	EF-17	530	20	1	•			1	20	530	EF-21	3		2
3		3	EF-16	700	20	1		•		1	20	530	EF-19	3		4
5		3	EF-15	900	20	1			•	1	20	700	EF-18	3		6
7		3	EF-14	900	20	1	•			1	20	900	EF-10	3		8
9		3	EF-12	530	20	1		•		1	20	900	EF-11	3		10
11		3	EF-1	530	20	1			•	1	20	900	EF-9	3		12
13		3	EF-7	700	20	1	•			1	20	300	LIGHTS	2		14
15		3	EF-4	530	20	1		•		1	20	700	EF-3	3		16
17	A,C	2	RECEPT'S - FURN. FEED	1080	20	3			•	1	20	530	EF-2	3		18
19	A,C	2	RECEPT'S - FURN. FEED	900	/			•		1	20	300	AIR PURIFIERS	2		20
21	A,C	2	RECEPT'S - FURN. FEED	900	/				•	1	20	1200	DISHWASHER	5	A,B,C	22
23	A,C	2	RECEPT'S - FURN. FEED	1080	20	3			•	1	20	1000	MICROWAVE	5	A,B,C	24
25	A,C	2	RECEPT'S - FURN. FEED	1080	/			•		1	20	900	REFRIGERATOR	5	A,B,C	26
27	A,C	2	RECEPT'S - FURN. FEED	900	/				•	1	20	1200	PHONE ROOMS	6	A,B,C	28
29	A,C	2	RECEPT'S - FURN. FEED	900	20	1			•	1	20	1128	LIGHTING AND RECEPT'S	6	A,C	30
31	A,C	2	RECEPT'S - FURN. FEED	1080	20	3	•			1	20	1080	RECEPT'S - CONF.			32
33	A,C	2	RECEPT'S - FURN. FEED	900	/			•			-		SPACE			34
35	A,C	2	RECEPT'S - FURN. FEED	900	/				•		-		SPACE			36
37	A,C	2	RECEPT'S - FURN. FEED	900	20	1	•				-		SPACE			38
39	A,C	2	RECEPT'S - FURN. FEED	900	20	1		•			-		SPACE			40
41	A,B,C	5	GARBAGE DISPOSAL	850	20	1			•		-		SPACE			42

Code	Description	Load VA	Dem
1	Lighting & Car Chargers		125%
2	Rec up to 10,000	10000	100%
	Rec over 10,000	2120	50%
3	Motor	10110	100%
	Largest Motor	900	125%
4	Heater		100%
5	Kitchen	3950	80%
6	Other	2328	100%
7	Sub Panel		100%

Load Summary

Per Phase			
Ph A	8120	VA	
Ph B	8270	VA	
Ph C	8518	VA	
Connected			29408 VA
Code Demand			27783 VA
Code Demand			77.21 Amps

NOTES:
A PROVIDE NEW BREAKER IN EXISTING PANEL
B PROVIDE GFCI BREAKER PER NATIONAL ELECTRIC CODE
C REVISED LOAD IN EXISTING PANEL
D

SHORT CIRCUIT CALCULATION

FAULT "X"	ISC AVAILABLE	FEEDER SIZE	CONDUIT STEEL	CONDUIT PVC	WIRE TYPE	CONSTANT "C"	# OF SETS	FEEDER LENGTH	VOLTS L TO L	"F" FACTOR	"M" MULTIPLIE	ISC AT FAULT
XCEL PAD MOUNTED TRANSFORMER	25,600											
600A3P SERVICE DISCONNECT	12,800	500		X	AL	21391	2	50	480	0.0540	0.9488	12,144
PANEL H1	12,144	3/0		X	CU	13923	2	200	480	0.3147	0.7606	9,237
150KVA TRANSFORMER	12,800	250	X		AL	12122	1	50	480	0.1905	0.8400	10,752
PANEL L2	10,752	500	X		AL	18756	1	50	208	0.2387	0.8073	3,100
PANEL L2B	3,100	8		X	CU	1559	1	50	208	0.8279	0.5471	1,696

NOTES:
1. ABOVE VALUES ARE BASED ON ANTICIPATED INSTALLATION. CONTRACTOR SHALL PERFORM SHORT CIRCUIT CALCULATION BASED ON VE ITEMS, INSTALLED FEEDER SIZES, FEEDER LENGTHS AND FINAL EQUIPMENT LOCATIONS. CONTRACTOR TO SUBMIT SHORT STUDY PRIOR TO ELECTRICAL GEAR SUBMITTAL.
2.
3.

LOAD SUMMARY CALCULATION FOR "150KVA TRANSFORMER"

DESCRIPTION	LIGHTING	RECEPTACLE	LARGEST MOTOR	MOTOR	HEATER	KITCHEN	OTHER	TOTAL CONNECTED
PANEL L1	5285	33880	0	0	0	0	0	39165
PANEL L1A	0	8340	0	0	0	9500	0	17840
PANEL L2	0	4320	2200	16900	20300	1000	21500	64220
PANEL L2B	0	12120	900	10110	0	3950	0	27080
LOAD VA	5285	58660	3100	27010	20300	14450	21500	150305

DESCRIPTION	LOAD VA	DEM FAC.	DEM. VA
LIGHTING	5285	1.25	6606
REC UP TO 10,000	10000	1.00	10000
REC. OVER 10,000	48660	0.50	24330
MOTOR	27010	1.00	27010
LARGEST MOTOR	3100	1.25	3875
HEATER	20300	1.00	20300
KITCHEN	14450	1.00	14450
OTHER	21500	1.00	21500
TOTAL CODE DEMAND VA			128071 VA

Total Code Demand
128071.25 VA / 480 = 267 AMPS

Total Connected Load = 150305 VA

Total Demand Load = 128071 VA

TRUE NORTH | PROJECT NORTH

Clic. DESIGN STUDIO
50 SOUTH STEELE STREET, DENVER, CO 80209
FOUNDERS + PRINCIPALS
RENE STREMEL | 303.437.4956 | RENE@CLICDESIGNSTUDIO.COM
SARAH MCGARRY | 303.915.4314 | SARAH@CLICDESIGNSTUDIO.COM

© COPYRIGHT 2022
ANY UNAUTHORIZED USE OF THESE DOCUMENTS IS PROHIBITED WITHOUT THE WRITTEN CONSENT OF CLIC DESIGN STUDIO.

CMTA A LEGENCE Company formerly KLOK Group

NOT FOR CONSTRUCTION

THRIVING FAMILIES
191 Yuma St, Denver CO, 80223

ISSUANCE:	DATE
FOR CONSTRUCTION	2024.04.10

REVISION	DATE

PROJECT NUMBER: 20XXX
SHEET TITLE: ELECTRICAL SCHEDULES
SHEET NUMBER: E0.05

COMCHECK NOTE: ALL BLANK SECTIONS AND/OR PAGES OMITTED, NO INFORMATION OMITTED

COM*check* Software Version COMcheckWeb

Interior Lighting Compliance Certificate

Project Information

Energy Code: 2021 IECC
Project Title: Thriving Families
Project Type: Alteration

Construction Site:
191 Yuma St
Denver, Colorado 80223

Owner/Agent:

Designer/Contractor:
CMTA
1407 Washington Ave
Golden, Colorado 80401

Allowed Interior Lighting Power

A Area Category	B Floor Area (ft2)	C Allowed Watts / ft2	D Allowed Watts
1-Office	7335	0.64	4694
		Total Allowed Watts =	4694

Proposed Interior Lighting Power

A Fixture ID : Description / Lamp / Wattage Per Lamp / Ballast	B Lamps/ Fixture	C # of Fixture	D Fixture Watt.	E (C X D)
Office (7335 sq.ft.)				
LED: F1: Other:	1	82	35	2870
LED: F2: Other:	1	19	22	428
LED: F3: Other:	1	4	35	140
LED: F4: Other:	1	9	27	243
LED: F5: Other:	1	1	48	48
			Total Proposed Watts =	3728

Interior Lighting PASSES

Interior Lighting Compliance Statement

Compliance Statement: The proposed interior lighting alteration project represented in this document is consistent with the building plans, specifications, and other calculations submitted with this permit application. The proposed interior lighting systems have been designed to meet the 2021 IECC requirements in COM*check* Version COMcheckWeb and to comply with any applicable mandatory requirements listed in the Inspection Checklist.

Madison Cahan - Electrical Engineer 04.04.2024

COM*check* Software Version COMcheckWeb

Inspection Checklist

Energy Code: 2021 IECC

Requirements: 100.0% were addressed directly in the COM*check* software

Text in the "Comments/Assumptions" column is provided by the user in the COMcheck Requirements screen. For each requirement, the user certifies that a code requirement will be met and how that is documented, or that an exception is being claimed. Where compliance is itemized in a separate table, a reference to that table is provided.

Section # & Req.ID	Plan Review	Complies?	Comments/Assumptions
C103.2 [PR4][1]	Plans, specifications, and/or calculations provide all information with which compliance can be determined for the interior lighting and electrical systems and equipment and document where exceptions to the standard are claimed. Information provided should include interior lighting power calculations, wattage of bulbs and ballasts, transformers and control devices.	☐Complies ☐Does Not ☐Not Observable ☐Not Applicable	Requirement will be met.

Section # & Req.ID	Rough-In Electrical Inspection	Complies?	Comments/Assumptions
C405.2.3.1 [EL22][1]	Spaces required to have light-reduction controls have a manual control that allows the occupant to reduce the connected lighting load in a reasonably uniform illumination pattern >= 50 percent.	☐Complies ☐Does Not ☐Not Observable ☐Not Applicable	Requirement will be met.
C405.2.1, C405.2.1.1 [EL18][1]	Occupancy sensors installed in classrooms/lecture/training rooms, conference/meeting/multipurpose rooms, copy/print rooms, lounges/breakrooms, enclosed offices, open plan office areas, restrooms, storage rooms, locker rooms, corridors, warehouse storage areas, and other spaces <= 300 sqft that are enclosed by floor-to-ceiling height partitions. Reference section language C405.2.1.2 for control function in warehouses and section C405.2.1.3 for open plan office spaces.	☐Complies ☐Does Not ☐Not Observable ☐Not Applicable	Requirement will be met.
C405.2.1.2 [EL19][1]	Occupancy sensors control function in warehouses: In warehouses, the lighting in aisleways and open areas is controlled with occupant sensors that automatically reduce lighting power by 50% or more within 20 minutes of when the areas are unoccupied. The occupant sensors control lighting in each aisleway independently and do not control lighting beyond the aisleway being controlled by the sensor. Lights not turned off by occupant sensors is done so by time-switch.	☐Complies ☐Does Not ☐Not Observable ☐Not Applicable	**Exception:** Requirement does not apply.
C405.2.1.3 [EL20][1]	Occupant sensor control function in open plan office areas: Occupant sensor controls in open office spaces >= 300 sq.ft. have controls 1) configured so that general lighting can be controlled separately in control zones with floor areas <= 600 sq.ft. within the space, 2) general lighting in each zone permitted to turn on upon occupancy in control zone, 3) automatically turn off general lighting in all control zones within 20 minutes after all occupants have left the space, 4) are configured so that general lighting power in each control zone is reduced by >= 80% of the full zone general lighting power within 20 minutes of all occupants leaving that control zone.	☐Complies ☐Does Not ☐Not Observable ☐Not Applicable	Requirement will be met.
C405.2.2, C405.2.2.1 [EL21][2]	Each area not served by occupancy sensors (per C405.2.1.1) have time-switch controls and functions detailed in sections C405.2.2.1.	☐Complies ☐Does Not ☐Not Observable ☐Not Applicable	**Exception:** Luminaires requiring specific controls in accordance with C405.2.4.

Section # & Req.ID	Rough-In Electrical Inspection	Complies?	Comments/Assumptions
C405.2.4, C405.2.4.1, C405.2.4.2 [EL23][2]	Daylight zones provided with individual controls that control the lights independent of general area lighting. See code section C405.2.3 Daylight-responsive controls for applicable spaces. C405.2.3.1 Daylight responsive control function and section C405.2.3.2 Sidelit zone.	☐Complies ☐Does Not ☐Not Observable ☐Not Applicable	Requirement will be met.
C405.2.5 [EL27][1]	Additional interior lighting power allowed for special functions per the approved lighting plans and is automatically controlled and separated from general lighting.	☐Complies ☐Does Not ☐Not Observable ☐Not Applicable	Requirement will be met.
C405.7 [EL26][2]	Low-voltage dry-type distribution electric transformers meet the minimum efficiency requirements of Table C405.6.	☐Complies ☐Does Not ☐Not Observable ☐Not Applicable	**Exception:** Requirement does not apply.
C405.8 [EL27][2]	Electric motors meet the minimum efficiency requirements of Tables C405.7(1) through C405.7(4). Efficiency verified through certification under an approved certification program or the equipment efficiency ratings shall be provided by motor manufacturer (where certification programs do not exist).	☐Complies ☐Does Not ☐Not Observable ☐Not Applicable	Requirement will be met.
C405.9.1, C405.9.2 [EL28][2]	Escalators and moving walks comply with ASME A17.1/CSA B44 and have automatic controls configured to reduce speed to the minimum permitted speed in accordance with ASME A17.1/CSA B44 or applicable local code when not conveying passengers.	☐Complies ☐Does Not ☐Not Observable ☐Not Applicable	**Exception:** Requirement does not apply.
C405.10 [EL29][2]	Total voltage drop across the combination of feeders and branch circuits <= 5%.	☐Complies ☐Does Not ☐Not Observable ☐Not Applicable	Requirement will be met.
C405.1.1 [EL30][2]	At least 90% of dwelling unit permanently installed lighting shall have lamp efficacy >= 65 lm/W or luminaires with efficacy >= 45 lm/W or comply with C405.2.4 or C405.3.	☐Complies ☐Does Not ☐Not Observable ☐Not Applicable	**Exception:** Requirement does not apply.
C405.11, C405.11.1 [EL31][2]	50% of 15/20 amp receptacles installed in enclosed offices, conference rooms, copy rooms, break rooms, classrooms and workstations and > 25% of branch circuit feeders for modular furniture will have automatic receptacle control in accordance with C405.11.1.	☐Complies ☐Does Not ☐Not Observable ☐Not Applicable	Requirement will be met.

Section # & Req.ID	Final Inspection	Complies?	Comments/Assumptions
C303.3, C408.2.5.2 [FI17][3]	Furnished O&M instructions for systems and equipment to the building owner or designated representative.	☐Complies ☐Does Not ☐Not Observable ☐Not Applicable	Requirement will be met.
C408.1.1 [FI57][1]	Building operations and maintenance documents will be provided to the owner. Documents will cover manufacturers' information, specifications, programming procedures and means of illustrating to owner how building, equipment and systems are intended to be installed, maintained, and operated.	☐Complies ☐Does Not ☐Not Observable ☐Not Applicable	Requirement will be met.
C408.2.5 [FI16][3]	Furnished as-built drawings for electric power systems within 90 days of system acceptance.	☐Complies ☐Does Not ☐Not Observable ☐Not Applicable	Requirement will be met.
C408.3 [FI33][1]	Lighting systems have been tested to ensure proper calibration, adjustment, programming, and operation.	☐Complies ☐Does Not ☐Not Observable ☐Not Applicable	Requirement will be met.

TRUE NORTH PROJECT NORTH

Clic. DESIGN STUDIO
50 SOUTH STEELE STREET, DENVER, CO 80209
FOUNDERS + PRINCIPALS
RENE STREMEL | 303.437.4956 | RENE@CLICDESIGNSTUDIO.COM
SARAH MCGARRY | 303.915.4314 | SARAH@CLICDESIGNSTUDIO.COM

© COPYRIGHT 2022
ANY UNAUTHORIZED USE OF THESE DOCUMENTS IS PROHIBITED WITHOUT THE WRITTEN CONSENT OF CLIC DESIGN STUDIO.

CMTA
A LEGENCE Company
formerly KLOK Group

NOT FOR CONSTRUCTION

THRIVING FAMILIES
191 Yuma St, Denver CO, 80223

ISSUANCE:	DATE
FOR CONSTRUCTION	2024.04.10

REVISION	DATE

PROJECT NUMBER: 20XXX

SHEET TITLE: COMCHECK

SHEET NUMBER: E0.06

LUMINAIRE SCHEDULE

TYPE	LAMP & KELVIN	DESCRIPTION	MOUNTING	MOUNTING HEIGHT	LOAD (VA)	LUMENS	VOLTS	CONTROL	MANUFACTURER/CAT. NO.	NOTES
F1	3500K LED	2'X4' GRID TROFFER	RECESSED	TBD	35	4000	120-277	0-10V DIMMING 10%	LITHONIA LIGHTING - STAKS 2X4 AL06 SWW7	1,2,3
F2	3500K LED	6" ROUND DOWNLIGHT	RECESSED	TBD	22.5	2006	120-277	0-10V DIMMING 10%	LITHONIA LIGHTING - LDN6 35/20 L06 * * * MVOLT GZ10	1,2,3
F3	4000K LED	4' LINEAR STRIP LIGHT	SURFACE	TBD	35.3	4298	120-277	NON-DIMMING	LITHONIA LIGHTING - CSS L48 4000LM MVOLT 40K 80CRI	1,2,3
F4	3500K LED	DECORATIVE VANITY SCONCE	SURFACE	TBD	27	1690	120-277	NON-DIMMING	LITHONIA LIGHTING - FMVCCLS 24IN MVOLT 30K35K40K 90CRI BN M6	1,2,3
F5	3500K LED	13' PERIMETER COVE LIGHTING	RECESSED	TBD	48.1	4108	120	DIMMING	MARK ARCHITECTURAL LIGHTING - SL4L LOP 13' RLP WFL 80CRI 35K 400LMF WW DARK 57VDC DCHUB	1,2,3

GENERAL NOTES:

1. VERIFY EXACT FIXTURE'S CATALOG NUMBER, FINISH, LAMP(S), LENGTHS AND OPTIONS WITH ARCHITECT/INTERIORS/OWNER PRIOR TO ORDERING.
2. CONTRACTOR TO VERIFY DIMMING CONTROLS ARE COMPATIBLE WITH LIGHT FIXTURE'S PURCHASED.
3. CONTRACTOR TO PROVIDE ALL PARTS AND ACESSORIES FOR A COMPLETE, AND FUNCTIONING SYSTEM.

NOTES:

A.

		OCCUPANCY SENSOR					DAYLIGHT SENSOR	OTHER				
Type	SOO	VACANCY MODE (MANUAL ON)	OCCUPANCY MODE (AUTO ON)	SENSOR TIMEOUT PERIOD (MINUTES)	DUAL TECHNOLOGY	MANUAL DIMMING	DIMMING	TARGET LIGHTING LEVEL (FC)	PLUG LOAD CONTROL	LOCAL HVAC INTERACE	EMERGENCY SHUNTING	NOTES
LC1	Work Room, Huddle, Wellness, Copy/Print		X	20	X	X	X	50				
LC2	Break Room, Waiting Room		X	20	X	X	X	30				
LC3	Corridor		X	20	X	X	X	20				
LC4	Open Office - Daylight		X	20	X	X	X	50	X			1,2
LC5	Open Office, Medium Conference		X	20	X	X	X	50	X		X	2
LC6	Restroom		X	20	X			30		X	X	
LC7	Storage, IDF Closet	X		20	X			30				

NOTES:

1 IF SHOWN ON LIGHTING PLANS - PROVIDE SECONDARY DAYLIGHT SIDE DAYLIGHT ZONE IF >300w IN BOTH THE PRIMARY AND SECONDARY ZONE.
2 OCCUPANCY ZONES TO BE NO GREATER THAN 600sqft

TRUE NORTH PROJECT NORTH

Clic. DESIGN STUDIO

50 SOUTH STEELE STREET, DENVER, CO 80209

FOUNDERS + PRINCIPALS
RENE STREMEL | 303.437.4956 | RENE@CLICDESIGNSTUDIO.COM
SARAH MCGARRY | 303.915.4314 | SARAH@CLICDESIGNSTUDIO.COM

© COPYRIGHT 2022
ANY UNAUTHORIZED USE OF THESE DOCUMENTS IS PROHIBITED WITHOUT THE WRITTEN CONSENT OF CLIC DESIGN STUDIO.

CMTA
A LEGENCE Company
formerly KLOK Group

NOT FOR CONSTRUCTION

THRIVING FAMILIES
191 Yuma St, Denver CO, 80223

ISSUANCE: DATE
FOR CONSTRUCTION 2024.04.10

REVISION DATE

PROJECT NUMBER: 20XXX

SHEET TITLE:
LIGHTING SCHEDULES

SHEET NUMBER:
E0.07

KEY NOTES:

1. NO NEW CIRCUITS REQUIRED. RECONNECT AS REQUIRED, NEW FLOOR CORE DEVICE TO EXISTING CIRCUIT SERVING THE FLOOR CORE DEVICE. ENSURE LOAD DOES NOT EXCEED 16A PER 20A CIRCUIT. CONTACT ENGINEER FOR PLAN UPDATE IF SIGNIFICANT DISCREPANCIES OCCUR.
2. ELECTRICAL CONTRACTOR SHALL PROVIDE AND INSTALL JUNCTION BOX IN APPROXIMATE LOCATION SHOWN FOR CLIENT'S CARD READER. COORDINATE MOUNTING HEIGHT, INSTALLATION LOCATION, AND ALL ADDITIONAL INSTALLATION REQUIREMENTS WITH CLIENT AND ARCHITECT PRIOR TO ROUGH-IN.
3. ALL EXISTING ELECTRICAL DEVICES ARE EXISTING TO REMAIN. MAINTAIN CIRCUIT CONTINUITY THROUGHOUT. EXTEND BRANCH CONDUCTORS AS REQUIRED.
4. APPROXIMATE LOCATION SHOWN FOR CLIENT PROVIDED PHONE BOOTH AS MANUFACTURED BY ROOM. EXACT ELECTRICAL REQUIREMENTS UNKNOWN AT THE TIME OF DESIGN. ASSUMED 120V ELECTRICAL CONNECTION, 5AMP, PLUG-IN CONNECTION TYPE. COORDINATE EXACT INSTALLATION LOCATION, MOUNTING HEIGHT, AND ANY ADDITIONAL INSTALLATION REQUIREMENTS WITH CLIENT AND ARCHITECT PRIOR TO ROUGH-IN. CONTACT ENGINEER FOR PLAN UPDATE IF SIGNIFICANT DISCREPANCIES OCCUR.
5. PROVIDE CIRCUITS AS SHOWN FOR CONNECTION TO FURNITURE SYSTEM AND 4X4 INCH BACK BOX FOR LOW VOLTAGE CONNECTIONS TO FURNITURE SYSTEM. THE CIRCUITS SHARING A COMMON NEUTRAL SHALL BE SIMULTANEOUSLY DISCONNECTED AT THE ELECTRICAL PANEL BOARD PER N.E.C 2023 REQUIREMENTS. COORDINATE EXACT LOCATION OF SERVICE AND REQUIRED CONNECTIONS TO FURNITURE WITH ARCHITECT/FURNITURE PARTITION INSTALLER AS REQUIRED.
6. PER 2021 IECC C405.11, ALL RECEPTACLES WITH "C" TAG INDICATE RECEPTACLES THAT ARE TO BE AUTOMATICALLY CONTROLLED. RECEPTACLE TO BE SPLIT CONTROLLED WITH TOP RECEPTACLE BEING CONTROLLED. THE INTENT IS FOR THE CONTROLLED RECEPTACLES TO BE CONTROLLED VIA THE OCCUPANCY SENSOR THAT IS CURRENTLY SERVING THE SPACE OR IS THE CLOSEST IN PROXIMITY TO THE RECEPTACLE SEE SHEET E200 FOR MORE INFORMATION. WHEN THE LIGHTS SHUT OFF -THE CONTROLLED RECEPTACLES SHALL ALSO SHUT OFF. ALL CONTROLLED RECEPTACLES SHALL BE PERMANENTLY MARKED IN ACCORDANCE WITH NFPA 70.
7. PER 2021 IECC C405.11, ALL FURNITURE FEEDS MARKED WITH A "C" TAG INDICATE FURNITURE FEEDS THAT ARE TO BE AUTOMATICALLY CONTROLLED. ELECTRICAL CONTRACTOR TO PROVIDE AND INSTALL ON/OFF POWER PACK FOR CONTROL OF ONE [1] BRANCH CIRCUIT FEEDER PER MODULAR FURNITURE SYSTEM 4-CIRCUIT RECEPTACLE POWER SUPPLY. THE INTENT IS FOR THE CONTROLLED RECEPTACLES TO BE CONTROLLED VIA THE OCCUPANCY SENSOR THAT IS CURRENTLY SERVING THE SPACE OR IS THE CLOSEST IN PROXIMITY TO THE RECEPTACLE SEE SHEET E200 FOR MORE INFORMATION. WHEN THE LIGHTS SHUT OFF -THE CONTROLLED RECEPTACLES SHALL ALSO SHUT OFF. ALL CONTROLLED RECEPTACLES SHALL BE PERMANENTLY MARKED IN ACCORDANCE WITH NFPA 70.

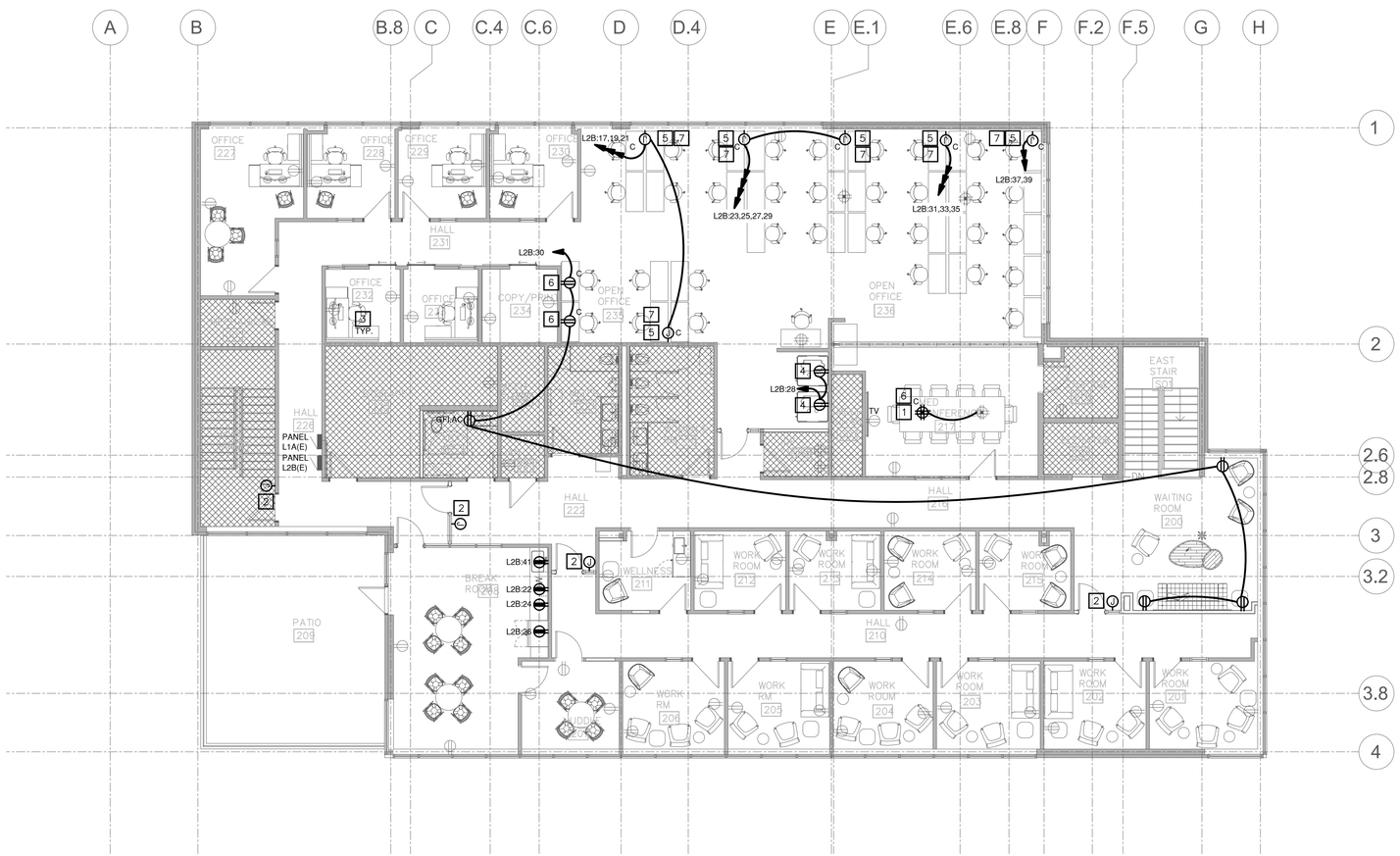

1 ELECTRICAL FLOOR PLAN
SCALE: 1/8"=1'-0"

TRUE NORTH PROJECT NORTH

Clic. DESIGN STUDIO

50 SOUTH STEELE STREET, DENVER, CO 80209

FOUNDERS + PRINCIPALS
RENE STREMEL | 303.437.4956 |
RENE@CLICDESIGNSTUDIO.COM
SARAH MCGARRY | 303.915.4314 |
SARAH@CLICDESIGNSTUDIO.COM

© COPYRIGHT 2022
ANY UNAUTHORIZED USE OF THESE DOCUMENTS IS PROHIBITED WITHOUT THE WRITTEN CONSENT OF CLIC DESIGN STUDIO.

CMTA
A LEGENCE Company
formerly KLOK Group

NOT FOR CONSTRUCTION

THRIVING FAMILIES

191 Yuma St, Denver CO, 80223

ISSUANCE:	DATE
FOR CONSTRUCTION	2024.04.10

REVISION	DATE

PROJECT NUMBER: 20XXX

SHEET TITLE: ELECTRICAL FLOOR PLAN

SHEET NUMBER: E1.00

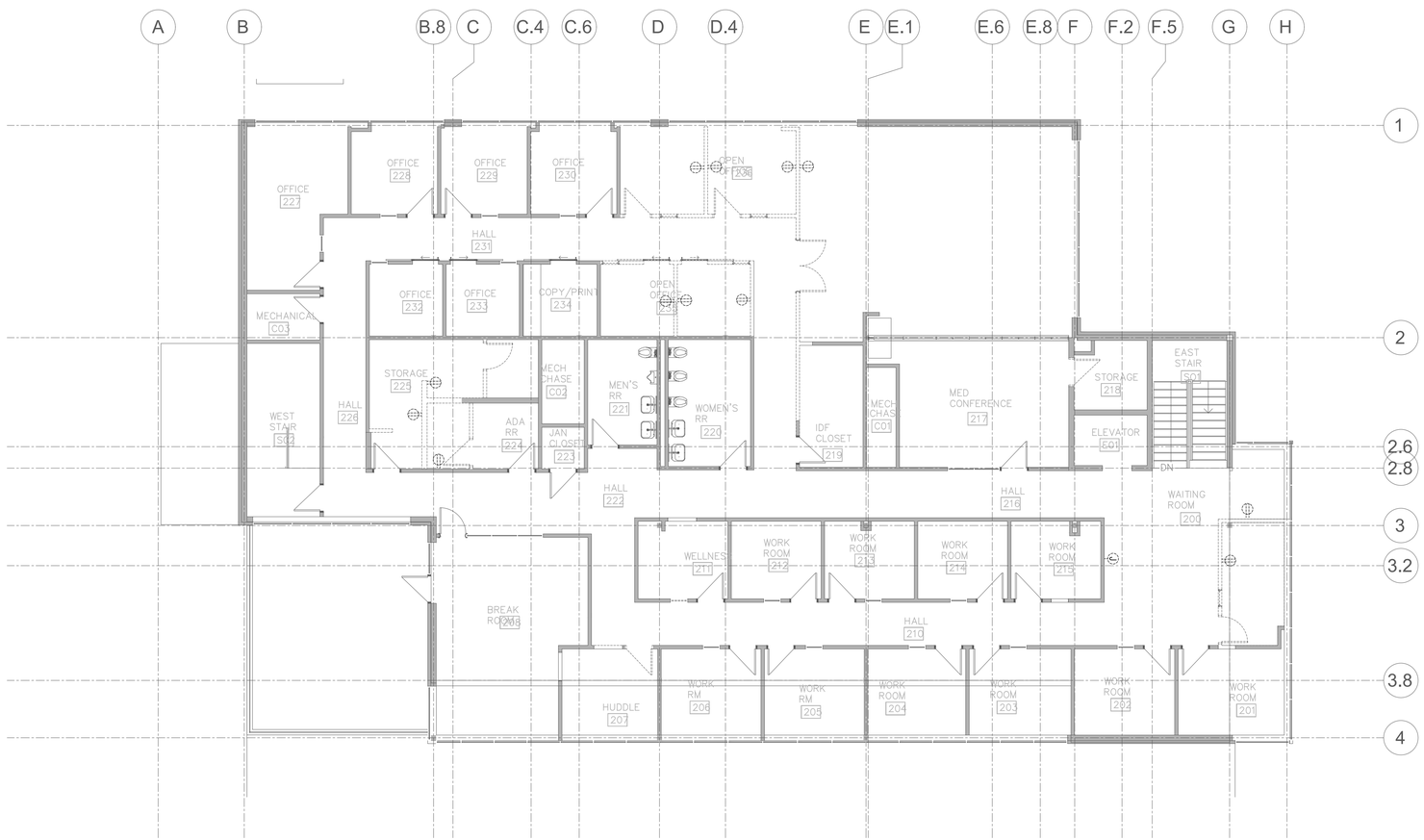

1 ELECTRICAL DEMOLITION FLOOR PLAN
SCALE 1/8"=1'-0"

TRUE NORTH PROJECT NORTH

Clic. DESIGN STUDIO

50 SOUTH STEELE STREET, DENVER, CO 80209

FOUNDERS + PRINCIPALS
RENE STREMEL | 303.437.4956 |
RENE@CLICDESIGNSTUDIO.COM
SARAH MCGARRY | 303.915.4314 |
SARAH@CLICDESIGNSTUDIO.COM

© COPYRIGHT 2022
ANY UNAUTHORIZED USE OF THESE DOCUMENTS IS PROHIBITED WITHOUT THE WRITTEN CONSENT OF CLIC DESIGN STUDIO.

CMTA
A LEGENCE Company
formerly KLOK Group

NOT FOR CONSTRUCTION

THRIVING FAMILIES
191 Yuma St, Denver CO, 80223

ISSUANCE:	DATE
FOR CONSTRUCTION	2024.04.10

REVISION	DATE

PROJECT NUMBER: 20XXX

SHEET TITLE:
ELECTRICAL DEMOLITION FLOOR PLAN

SHEET NUMBER:
E1.01

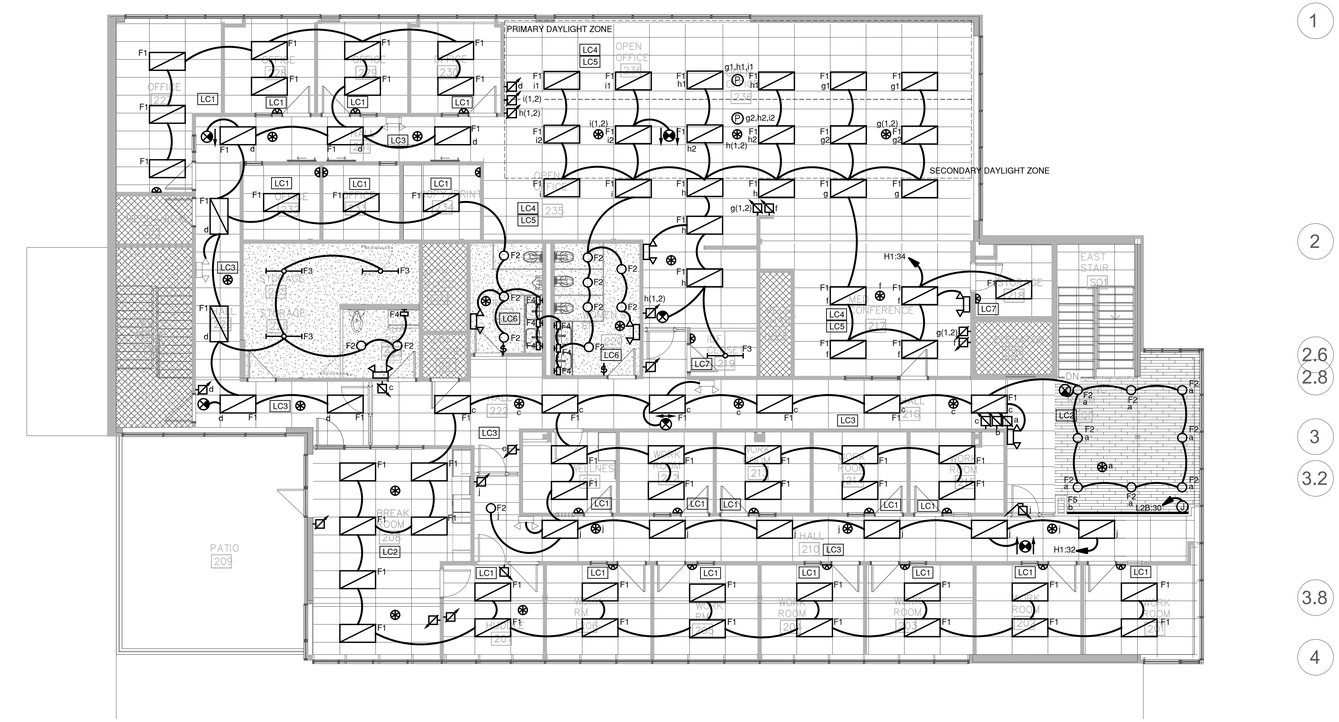

1 LIGHTING FLOOR PLAN
SCALE 1/8"=1'-0"

TRUE NORTH PROJECT NORTH

Clic. DESIGN STUDIO

50 SOUTH STEELE STREET, DENVER, CO 80209

FOUNDERS + PRINCIPALS
RENE STREMEL | 303.437.4956 |
RENE@CLICDESIGNSTUDIO.COM
SARAH MCGARRY | 303.915.4314 |
SARAH@CLICDESIGNSTUDIO.COM

© COPYRIGHT 2022
ANY UNAUTHORIZED USE OF THESE DOCUMENTS IS PROHIBITED WITHOUT THE WRITTEN CONSENT OF CLIC DESIGN STUDIO.

CMTA
A LEGENCE Company
formerly KLOK Group

NOT FOR CONSTRUCTION

THRIVING FAMILIES
191 Yuma St, Denver CO, 80223

ISSUANCE:	DATE
FOR CONSTRUCTION	2024.04.10

REVISION	DATE

PROJECT NUMBER: 20XXX

SHEET TITLE: LIGHTING FLOOR PLAN

SHEET NUMBER: E2.00

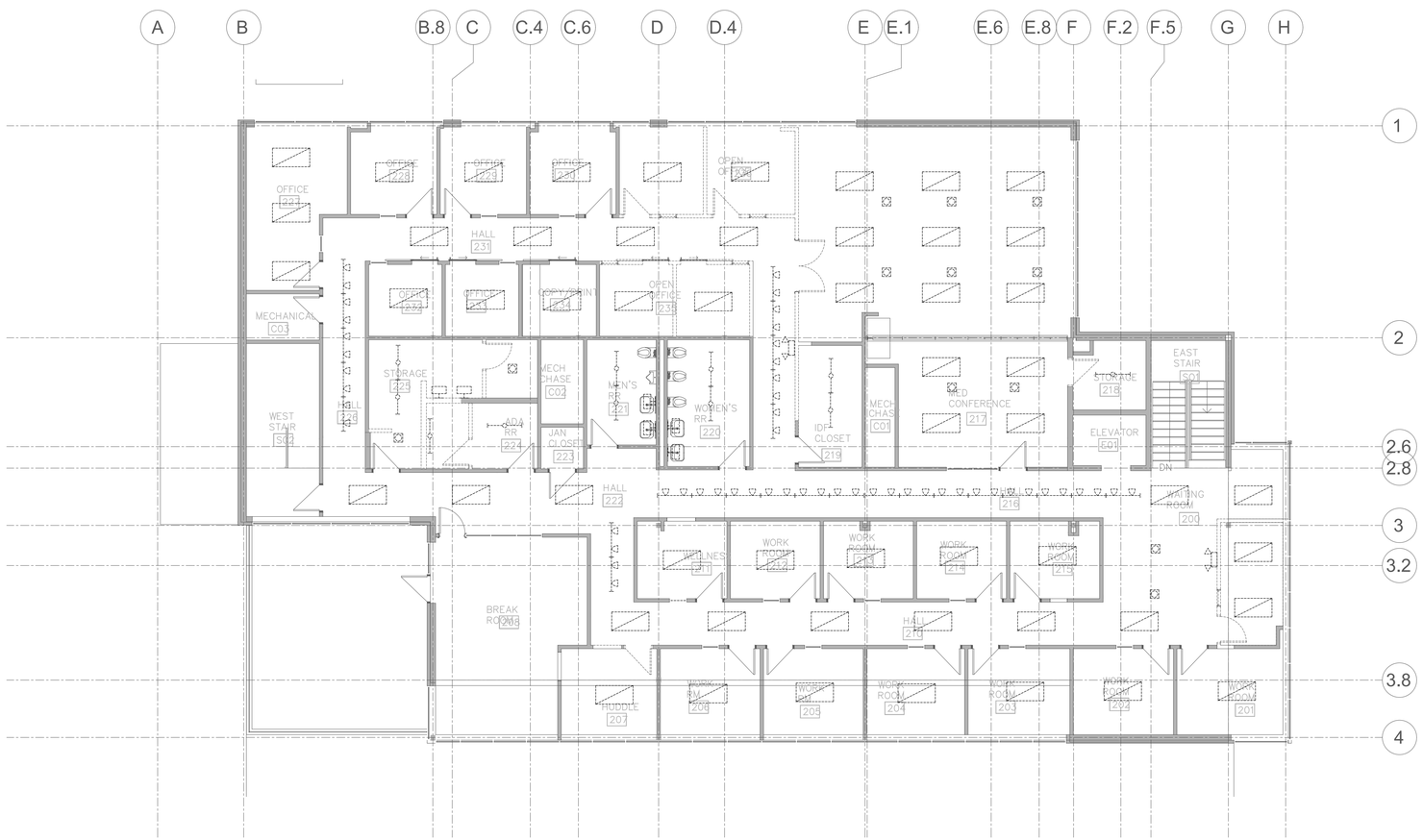

1 LIGHTING DEMOLITION FLOOR PLAN
SCALE 1/8"=1'-0"

TRUE NORTH PROJECT NORTH

Clic. DESIGN STUDIO

50 SOUTH STEELE STREET, DENVER, CO 80209

FOUNDERS + PRINCIPALS
RENE STREMEL | 303.437.4956 |
RENE@CLICDESIGNSTUDIO.COM
SARAH MCGARRY | 303.915.4314 |
SARAH@CLICDESIGNSTUDIO.COM

© COPYRIGHT 2022
ANY UNAUTHORIZED USE OF THESE DOCUMENTS IS PROHIBITED WITHOUT THE WRITTEN CONSENT OF CLIC DESIGN STUDIO.

CMTA
A LEGENCE Company
formerly KLOK Group

NOT FOR CONSTRUCTION

THRIVING FAMILIES

191 Yuma St, Denver CO, 80223

ISSUANCE:	DATE
FOR CONSTRUCTION	2024.04.10

REVISION	DATE

PROJECT NUMBER: 20XXX

SHEET TITLE:
LIGHTING DEMOLITION FLOOR PLAN

SHEET NUMBER:
E2.01