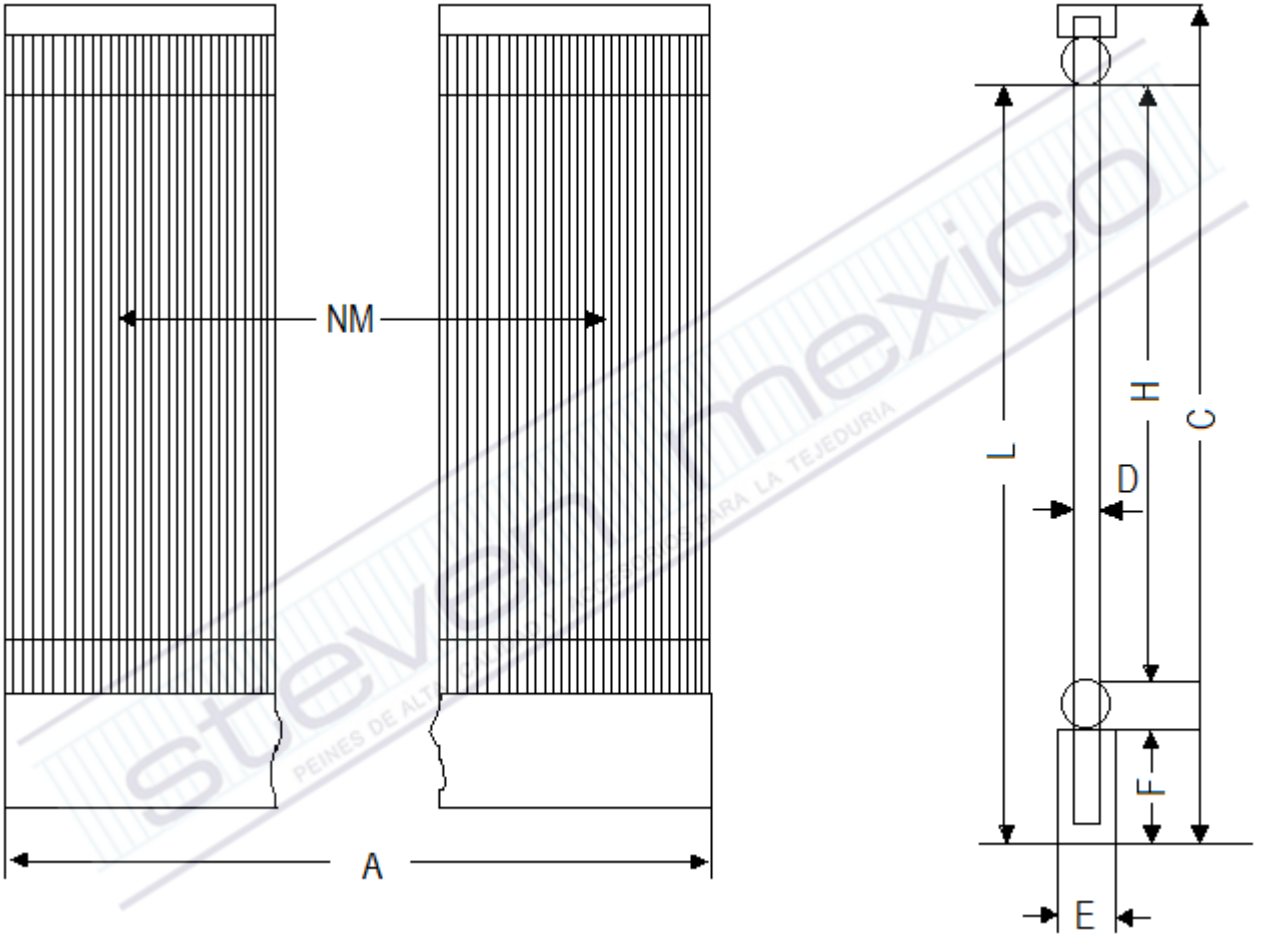
NM
A
L
H
C
D
F
E