Quiet smart curtain
Pursue elegant life

2NET
SmartHome

CM1

Build-in wifi

With plug

With Molex cable

Product code: 187219 (Motor with plug) 187119 (Motor with molex cable)

Exquisite

Motor size is 320*40*40mm,rated torque is 1.0Nm, Max.loading capacity is 40kgs.

Motor size

320*40*40mm

Rated torque

1.0Nm

Max.loading capacity

40KG

0-12.7mm/0.5"
0.01mm/0.0005"
40.00
inch /mm
OFF /ON
ZERO
40Kg

DC motor, efficiency and safety

DC motor,low power consumption

Continuous working for long time,no overheating problem

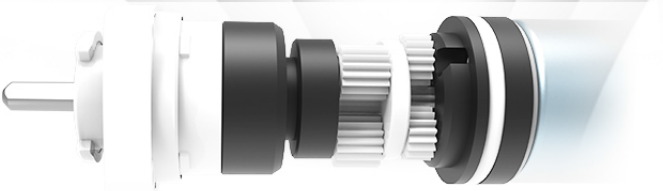

How to pick up motor?

DC motor

Advantage

- Low power consumption,green energy.
- Automatic speed,adjustable.
- Strong loading capacity.
- Low noise,enjoy quiet life.

AC motor

Advantage

- Wide application,strong universality.
- Low manufacturing cost.
- Simple control circuit,less manufacturing cost.

- No overheating,safe and efficient.

Disadvantage

- Complex electricity connection, high requirements for design
- Complex control circuit,high installation cost
- Complex internal structure,high manufacturing cost.

Disadvantage

- Large driving power and high power consumption.
- Easy overheating,can not run for long time.

One motor for mutiple application

Support to connect 2Net Smart App, and voice control on Google Home.

Smart Curtain Motor
More >

Follow your heart for 3 speeds for adjustment

75rpm

90rpm

110rpm

Professional and quiet

High precision DC motor,low vibration and
low noise during operation.Professional noise testing
by third party agency,noise level is less than 40dB

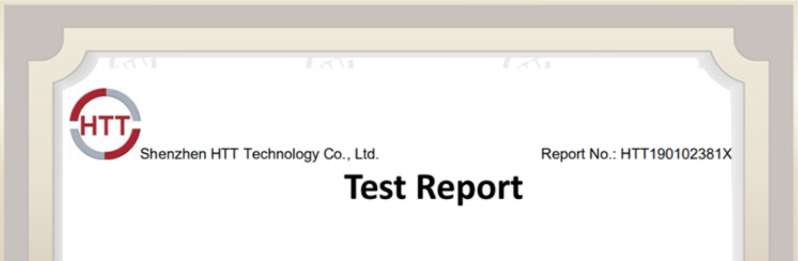

Shenzhen HTT Technology Co., Ltd. Report No.: HTT190102381X

Test Report

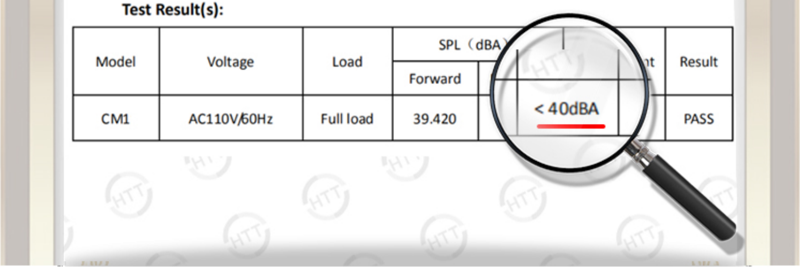

Test Result(s):

Model	Voltage	Load	SPL（dBA			nt	Result
			Forward				
CM1	AC110V/60Hz	Full load	39.420		< 40dBA		PASS

0dB

20dB
Noise of fallen leaves

< 40dB
Noise of curtain working

40dB
Noise of mosquito flying

One-button arrival,no need to wait

Work with new developed 3-limit remote,precisely control,
one button for 25%,50%,75% position

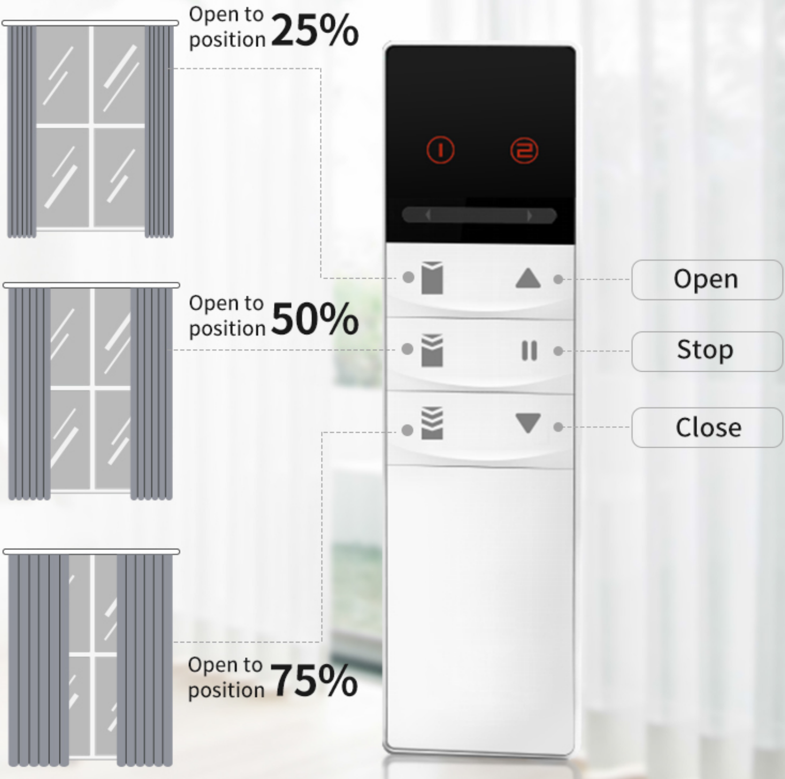

Open to position **25%**

Open to position **50%**

Open to position **75%**

Open

Stop

Close

Pay more attention on details, pursue the best

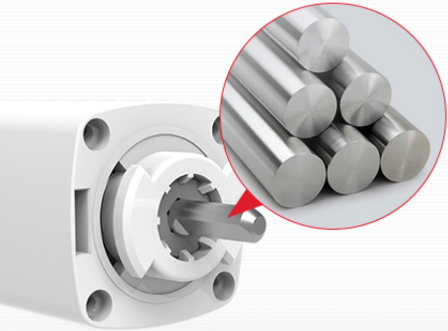

Alloy driven shaft, durable.

Professional Ageing testing before shipment.

Aluminium alloy body,high quality

Strict QC process and management,control quality well.

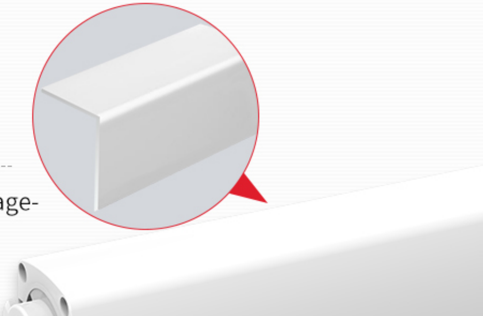

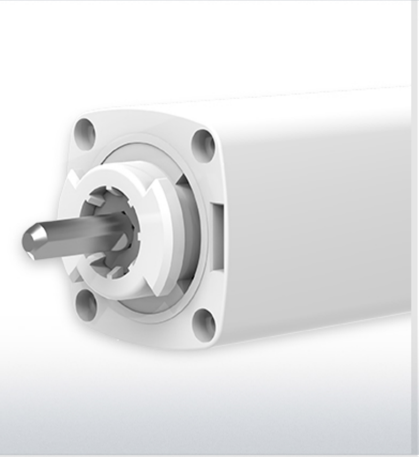

Product specification

Product model	CM1	**Rated voltage**	100-240VAC
Rated current	0.35A	**Rated frequency**	50/60Hz
Rated torque	1.0Nm	**Rated speed**	75/90/110rpm
Max.limit	∞	**Noise**	<40dB

Loading capacity

CM1（1.0Nm）	Curvature radius（mm）	4m	6m	8m	12m
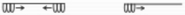	—	40Kg	40Kg	30Kg	20Kg
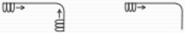	R400	40Kg	30Kg	20Kg	—
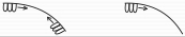	R2000	40Kg	30Kg	20Kg	—
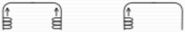	R400×2	25Kg	20Kg	—	—

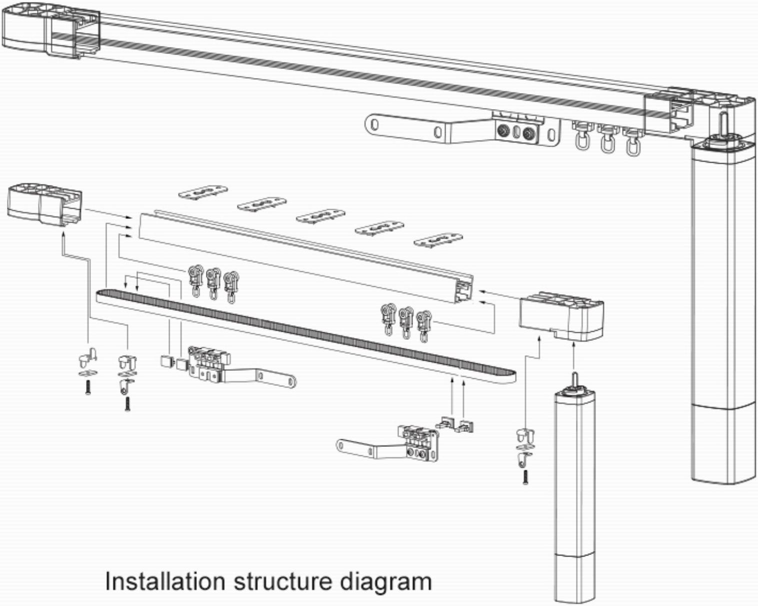

Installation structure diagram