Innovative Engineering Foundation

Semitrailer Bolts Torque's and Maintenance Schedule

Trailers Solutions

SEMI-TRAILER TORQUE SETTING & SCHEDULE Description		Bolt Size	Torque Value (Nm)	Initially After 1st Trip/1000 Kms	Every 3 Months/ 24000 Kms	Bi-Annual/ 50,000 Kms	Yearly/ 100,000 Kms
3X9 Tons BPW Air Suspension Axle							
Wheel Nuts Tightening (Spigot)	1	M22	630	✓	✓	✓	✓
Pivot Bolt	2	M24	650	✓			✓
Axle Shock Absorber Bolt	3	M24	420	✓			✓
Spring Mounting U-Bolt (Modul)	4	M20	450	✓			✓
Airbag Bolt (Upper)	5	M12	66	✓			✓
Airbag Bolt (Lower)	6	M16	230-300	✓			✓
Lifting Axle Positioning Pin	7	M10	38	✓			✓

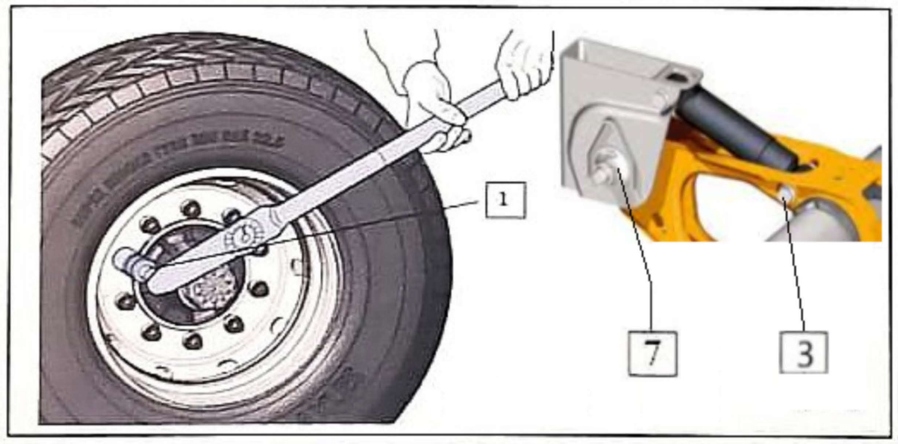

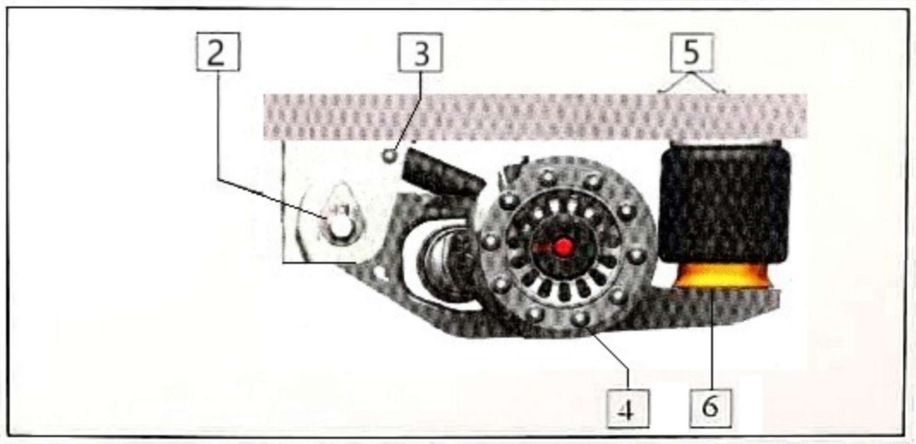
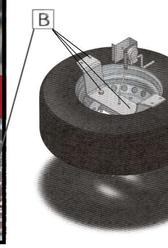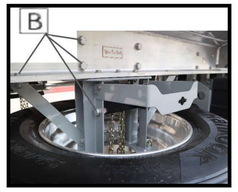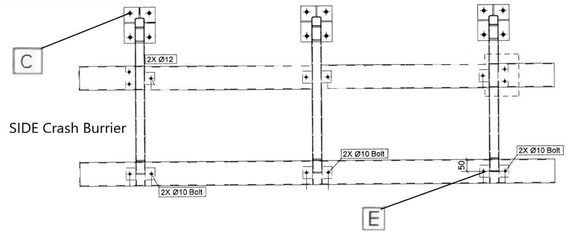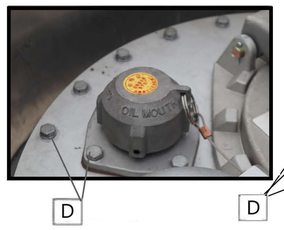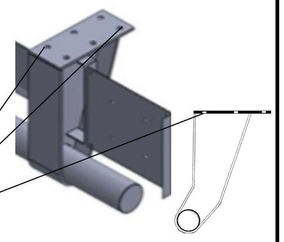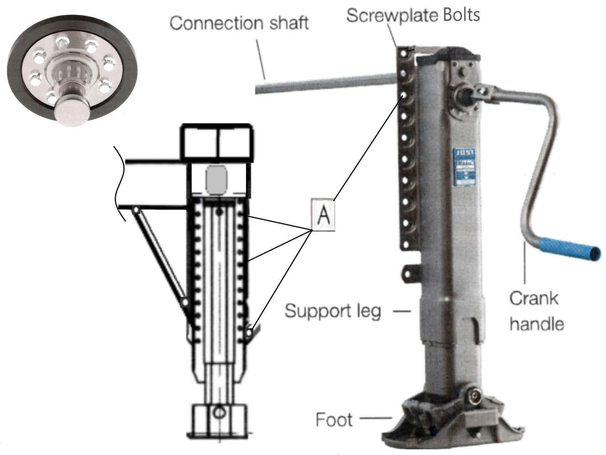
Others							
A	Landing Gear Mounting Bolts (8.8)	M16	240	✓	✓		
B	Spare Tire Carrier Bracket Bolt (8.8)	M16	240	✓	✓		
C	SIDE Crash Burrier – Steel Bracket to Main Beam Chassis (8.8)	M16	240	✓	✓		
D	SIDE Crash Burrier – Aluminum Profile to Steel Bracket (8.8)	M10	80	✓	✓		
E	Bumper Assembly – Bumper Steel Plate to Chassis (8.8)	M16	240	✓	✓