1967 BUICK ASSEMBLY INSTRUCTION MANUAL

SPECIAL - SKYLARK 43000 - 44000 SERIES

ELECTRICAL - SPEEDO CABLES & RADIO (SECTION 12)

	PAGES
Delcotron Code Identification	12-1.2
Battery Cable Code Identification	12-1.3
Instrument Cluster Identification	12-1.4
*Page 12-1.5 cancelled (8-1-66) See 12-4.1	
Wire Harness Identification & Usage Chart	12-1.6
Lamp & Fuse Chart	12-2.1
Head Lamp Aim - Chart	12-3.1
*Speedometer Cable Routing & Installation & Identification Code	12-4.1 thru 12-4.3
*Page 12-5.1 cancelled (8-1-66) See 12-4.2 & 12-4.3	
Wire Harness - Instrument Panel Wiring	12-6.1 thru 12-6.3
Forward Lamp Wiring	12-6.4
Engine Wire Harness Wiring	12-6.5
Battery Cable Installation & Wiring Information	12-6.6 & 12-6.7
Wiring Information Rear Lamps & Fuel Gage	12-6.8
For Station Wagons See	12-6.9
Wiring Information Air Condition	12-7.1
Wiring Information For Hydraulic Cruise Control	12-8.1
Wiring Information (Power Top)	12-9.1
Wiring Information Power Tail Gate	12-9.2
Antenna Installation	12-10.1
Radio Receiver Installation & Antenna Trim Adjustment	12-11.1
Radio Rear Speaker Installation	12-12.1
*Wiring Diagrams	12-14.2 thru 12-16.1

*8-2-66

DELCOTRON CODE IDENTIFICATION

The code is stamped on top of drive end frame as installed on engine.

PART NO.	CODE	OUTPUT (AMP.)	END FRAME POSITION	PULLEYS		USAGE
				DIA.	GROOVES	
1100761	VA	37	Upright	2.50	1	Non A/C with V6 Engine
*1100691	BA	*42	Upright	2.50	1	Non A/C with V8 Engine
1100774	BD	55	Upright	2.50	2	All Air Cond. Jobs

*11-28-66

ELECTRICAL (SECTION 12)

BATTERY CABLE CODE IDENTIFICATION

PART NO.	CODE	CABLE USAGE	MODEL
*6289159	RT	Cable Asm - Bat. Pos.	433-34-35-36-42-43-44 (V6 & V8)
6290277	RU	Cable Asm - Bat. Pos.	466 (Gran Sport)
2983780	JE	Cable Asm - Bat. Neg.	434-36-42-44 (V8)
6286159	RP	Cable Asm - Bat. Neg.	433-35-43 (V6) - T60
6289127	JB	Cable Asm - Bat. Neg.	446 (Gran Sport)

*10-31-66

ELECTRICAL & INSTRUMENTS (SECTION 12)

INSTRUMENT CLUSTER IDENTIFICATION

PART NO.	MODEL	CODE	KILOS	BUZZER	SHIFT IND.	REMARKS
6458778	A	AA	-	-	2 Sp.	Hydraulic Cruise Control not in Cluster
6458709	A	AD	-	*	2 Spd.	
6459069	A	AC	-	-	-	Manual Trans.
6458710	A	AE	*	*	2 Sp.	
6458780	A	AF	-	N.A.	2 Sp.	Police
6459563	A	AG	-	*	3 Sp.	Sportwagon 400
6459564	A	AH	-	-	3 Sp.	Sportwagon 400

*Indicates Option

Note: Electro Cruise Control is not available in these series.

3-29-66

ELECTRICAL (GROUP 12)

SPEEDOMETER CABLE CODE IDENTIFICATION

PART NO.	CODE	SERIES USAGE	LENGTH
6454600	*BB	- 3 Speed Manual - 2 Speed Automatic - 3 Speed Automatic	57.00"
6454656	*BA	G. S. - 3 Speed Manual - 4 Speed Manual	70.00"

*4-7-66

WIRE HARNESS CODE IDENTIFICATION

All wire harnesses are identified by code tape bearing letters and the last four di digits of the part number.

PART NAME	CODE	PART NAME	SERIES	USAGE
6290575	SF	Engine Wiring	A Jobs	V-6 Engine
6290576	SG	Engine Wiring	A Jobs	V-8 Engine
*6292004	SH	Engine Wiring	G.S. Jobs	400 Cu. In. Engine
*6291869	SL	Forward Lamp	A Jobs	All
6291793	SA	Inst. Panel	A Jobs	Standard
6291794	SB	Inst. Panel	A Jobs	Composite
6291795	SD	Inst. Panel	G.S. Jobs	Long Console D55
6291796	SC	Inst. Panel	G.S. Jobs	Short Console D57 & V16
2989489	SU	Console	All	With D55 & M33

*9-7-66

BUICK MOTOR DIVISION
GENERAL MOTORS CORPORATION
FLINT, MICH., U.S.A.

1378596

LAMPS

PART NUMBER	WHERE USED	LAMP NO.	NO. USED	CANDLE POWER	MODEL
	FRONT				
5956001	HEADLAMP - 5-3/4 DIA. TYPE - 1	4001	2	37.5 W	ALL
5956002	HEADLAMP - 5-3/4 DIA. TYPE - 2	4002-1	2	37.5 - 55 W	ALL
5946928	HEADLAMP - 5-3/4 DIA. TYPE - 2 (EXPORT)	4003	2	37.5 - 55 W	ALL
9429295	PARK & DIR. SIGNAL LAMP	1157 NA	2	34/4	ALL
274931	SPOTLAMP	4404	1	30 W	ALL
	REAR				
9417867	TAIL, STOP & DIR. SIGNAL LAMP	1157	2	32/4	ALL
9417866	BACK UP LAMP	1156	2	32	ALL
9421777	LICENSE LAMP	97	1	4	ALL
142452	LUGGAGE COMPARTMENT	89	1	6	ALL
344136	TROUBLE LAMP	1004	1	15	ALL
	INSTRUMENT PANEL				
9421330	INDIRECT LAMP	194	3	2	ALL
	INDICATORS				
9417561	HEADLAMP HI BEAM	161	1	1	ALL
9417561	DIR. SIGNAL	161	2	1	ALL
9421330	OIL PRESSURE	194	1	2	ALL
9421330	WATER TEMP.	194	1	2	ALL
9421330	GEN. CHARGE	194	1	2	ALL
131282	CRUISE CONTROL	53	1	1	ALL
	SERVICE ILLUMINATION				
9416927	AUTO. TRANSMISSION DIAL	1893	1	2	ALL
9416204	RADIO DIAL	1881	1	2	ALL
9416927	HEATER - DEFROSTER CONTROL DIAL	1893	2	2	ALL
274004	ASH RECEIVER	1445	1	.5	ALL
9421330	BRAKE WARNING	194	1	2	ALL
131282	TACHOMETER	53	1	1	ALL
9416927	GLOVE COMPARTMENT LAMP	1893	1	2	ALL
131282	AUTO TRANSMISSION DIAL CONSOLE	53	2	1	ALL
	INTERIOR ILLUMINATION				
9414045	DOME - ROOF CENTER	211	1	15	ALL (△)
383638	FLASHER DIR. SIGNAL (OPT. WITH 383639)		1		ALL
383639	FLASHER DIR. SIGNAL (OPT. WITH 383638)		1		ALL
142453	COURTESY - RT. & LT. SAIL PANELS	90	2	6	SKYLARK COUPES ONLY
142452	COURTESY LIGHT INST. PANEL	89	2	6	ALL
142453	COURTESY LIGHT INTERIOR	90	3	6	WAGONS ONLY
142453	COURTESY LIGHT (CONSOLE)	90	1	6	43 - 44 - 46
1883794	FLASHER HAZARD (OPT. WITH 1381300)		1		ALL
1381300	FLASHER HAZARD (OPT. WITH 3863700)		1		ALL

FUSES

G.M. PART NUMBER	WHERE USED	AMP	TYPE	LENGTH	MODEL
117142	RADIO - DIR. SIGNAL	10	AGC	1-1/4	ALL
106653	STOP LAMPS & HAZARD FLASHER	20	SFE	1-1/4	ALL
455844	BLOWER MOTOR (HEATER AND/OR AIR CONDITIONING & COMPRESSOR CLUTCH) POWER WDW RELAY COIL	25	AGC	1-1/4	ALL
148511	INSTRUMENT LIGHTS (ILLUMINATION)	4	AGC	1-1/4	ALL
106653	(WIPER)-TRANS. SOLENOIDS - BACK UP LIGHTS-INDICATOR LAMPS - BUZZER - CRUISE CONTROL	20	AGC	1-1/4	ALL
106653	(CIGAR LIGHTER - TAIL LIGHTS) - CLOCK- LICENSE, COURTESY, DOME, GLOVE BOX, TRUNK LIGHTS	20	SAE	1-1/4	ALL
126049	REAR WINDOW DEFROSTER BLOWER (INLINE FUSE)	5	Aur.	Std	ALL

G.M. PART NUMBER	FUSIBLE LINK REPAIR PARTS WHERE USED	GAGE	COLOR	LENGTH	MODEL
6292178	HEADLIGHT FEED CIRCUIT	16	BLACK	7.0	ALL
6292179	IGNITION & ACCESSORY FEED CIRCUIT	14	BROWN	7.0	ALL

1378596

DATE	STM.	REVISION RECORD	AUTH.	DR.	CK.
2-17-66	A	"X" REMOVED		PJ	JK
3-10-66	B	3863738 & 1381303 ADDED		JM	JK
3-23-66	C	1886326 TO 1881330 (BRAKE WARNING) 9421330 (DIR. SIG. LT.) REMOVED	JM	JK	
4-4-66	D	6292178 & 6292179 ADDED	JM	JK	
5-18-66	E	106653 TO 117142 & DATA REVISED 126049 ADDED POWER WDW RELAY COIL ADDED TO 455844 & CRUISE CONTROL ADDED TO 106653	106653	JM	JK
2-17-67	F	131282 & DATA ADDED	2957T	PP	JK

WORDS MARKED THUS [ ] INDICATES ABBREVIATED IDENTIFICATION OF FUSE CAVITY IN FUSE BLOCK.

(△) OMIT ON CONVERT. & SPECIAL TRIM.

DO NOT SCALE — REPORT ERRORS
TOLERANCES UNLESS OTHERWISE SPECIFIED
± ALLOWED ON TWO PLACE DECIMALS
± .010 ALLOWED ON THREE PLACE DECIMALS
COMMERCIAL TOLERANCES APPLY TO STANDARD PARTS - ROLLED SECTIONS - SHEET METAL GAGES - DRILLED AND PUNCHED HOLES.
BURR ALL DRILLED HOLES. COUNTERSINK ALL TAPPED HOLES .030 X 90°.

DWG. DATE 2-16-66	SCALE	DR. JM	
		CK. Jack A. Lange	
FIRST USED 1967 - 33-34-42-43-44-46		APPR.	
REFERENCE		APPR.	
		APPR.	
MATERIAL SPEC.			
NAME CHART - LAMP & FUSE			
PART NO. 1378596	INDEX 12-2.1		

C2 V3 P19515

1379601

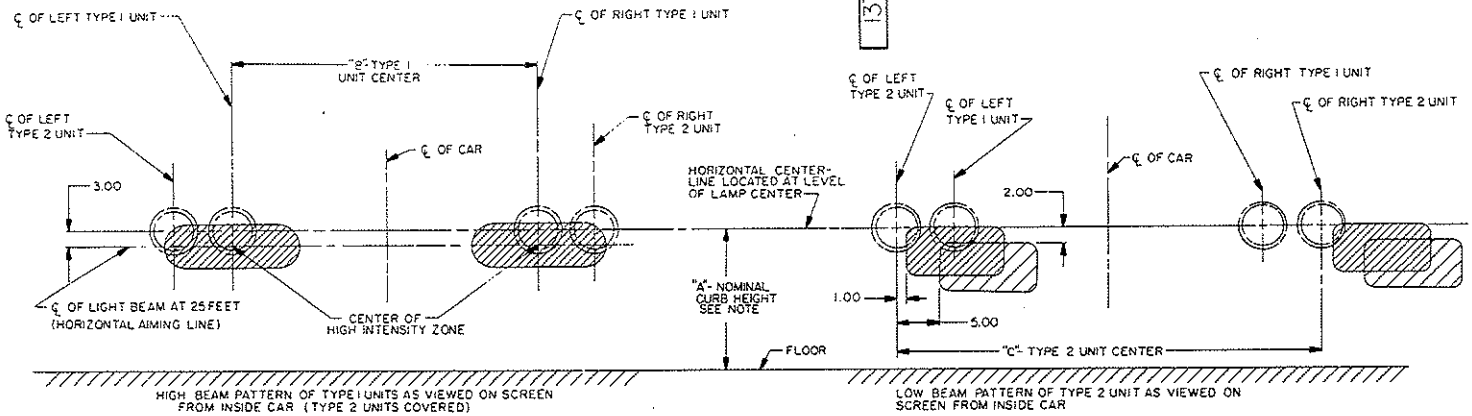

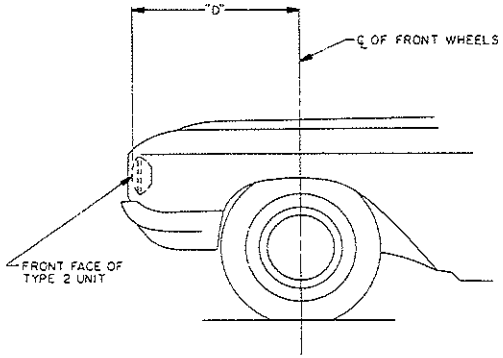

1. FLOOR ON WHICH CAR IS TESTED MUST BE PERFECTLY LEVEL, DOORS MUST BE CLOSED & CAR ROCKED SIDEWAYS PRIOR TO AIMING.
2. MEASURE DIMENSION "A" FOR LAMP AIM RECHECKS ON SCREEN.
3. ALLOWANCE OF 1.00 OVER THE CAR NOMINAL CURB HEIGHT HAS BEEN MADE FOR EMPTY GAS TANK & SETTLING OF SPRINGS.
4. UNITS AIMED ELECTRICALLY SHALL BE AIMED WITH 12.8±.4 VOLTS AT HEADLAMP TERMINALS.
5. ALL UNITS MUST MEET THE FOLLOWING AIMING TOLERANCES.

AIM INSPECTION LIMITS

TYPE 1 UNITS-HIGH BEAM

VERTICAL AIM - THE CENTER OF THE HIGH INTENSITY ZONE TO BE ±1.00 INCH FROM A LINE 3.00 INCHES BELOW THE HORIZONTAL CENTERLINE OF THE LAMP.
HORIZONTAL AIM - THE CENTER OF THE HIGH INTENSITY ZONE TO BE ±4.00 INCHES FROM THE VERTICAL CENTERLINE OF THE LAMP.

TYPE 2 UNITS-LOW BEAM

VERTICAL AIM - THE TOP EDGE OF THE HIGH INTENSITY ZONE TO BE LOCATED AT THE HORIZONTAL CENTERLINE OF THE LAMP TO 2.00 INCHES BELOW THE HORIZONTAL CENTERLINE OF THE LAMP.
HORIZONTAL AIM - THE LEFT EDGE OF THE HIGH INTENSITY ZONE TO BE LOCATED FROM 1.00 INCH TO 5.00 INCHES TO THE RIGHT OF THE VERTICAL CENTERLINE OF THE LAMP.

CAUTION - DO NOT AIM TYPE 2 UNITS ON THE UPPER BEAM.

THIS CHART FOR RIGHT HAND RULE OF THE ROAD DRIVING. FOR LEFT HAND RULE OF THE ROAD DRIVING THE LOW BEAM PATTERN IS SYMMETRICALLY OPPOSITE FROM THE PATTERN AS SHOWN. THE HIGH BEAM PATTERN REMAINS AS IS.

ALL DIM. ARE DESIGN DIM. AND DO NOT INCLUDE TOLERANCES.

SERIES		43-44000	43335 43435-635	44855-65 44455-65	44600	45000	46000	48000	49000
DIM.	"A"	27.29	27.67	27.81	26.54	27.79	27.26	27.44	26.33
	"B"	49.40	49.40	49.40	49.40	52.60	52.60	52.60	29.60
	"C"	63.20	63.20	63.20	63.20	65.52	65.52	65.52	42.96
	"D"	28.04	28.04	28.04	28.04	28.75	28.75	28.75	30.75
		©				©			

DATE	SYM.	REVISION RECORD	AUTH.	DR.	CK.
3-11-66	A	"X" REMOVED		J.D.	
4-20-66	B	26.72 TO 26.97 (DIM. A)		RMJ.	
4-18-66	C	26.97 TO 27.28 (DIM. A) 27.40 TO 27.79 (DIM. A)	108935		

DO NOT SCALE — REPORT ERRORS
TOLERANCES UNLESS OTHERWISE SPECIFIED
± ALLOWED ON TWO PLACE DECIMALS
± .010 ALLOWED ON THREE PLACE DECIMALS
COMMERCIAL TOLERANCES APPLY TO STANDARD PARTS - ROLLED SECTIONS - SHEET METAL GAGES - DRILLED AND PUNCHED HOLES.
BURR ALL DRILLED HOLES. COUNTERSINK ALL TAPPED HOLES .030 X 90°.

DWG. DATE 11-8-65	SCALE	DR. J. DRISCOLL
FIRST USED 1967 A-B-C&E		CK. R.P. STEWART
REFERENCE		APPR.
MATERIAL SPEC.		APPR.
		APPR.

NAME: CHART - HEADLAMP AIMING

PART NO. 1379601 — INDEX 12-3.1

GENERAL MOTORS CORPORATION FLINT, MICH. U.S.A.

1379601

B2V4 P17S15

BUICK MOTOR DIVISION
GENERAL MOTORS CORPORATION
FLINT, MICH., U.S.A.

1381420

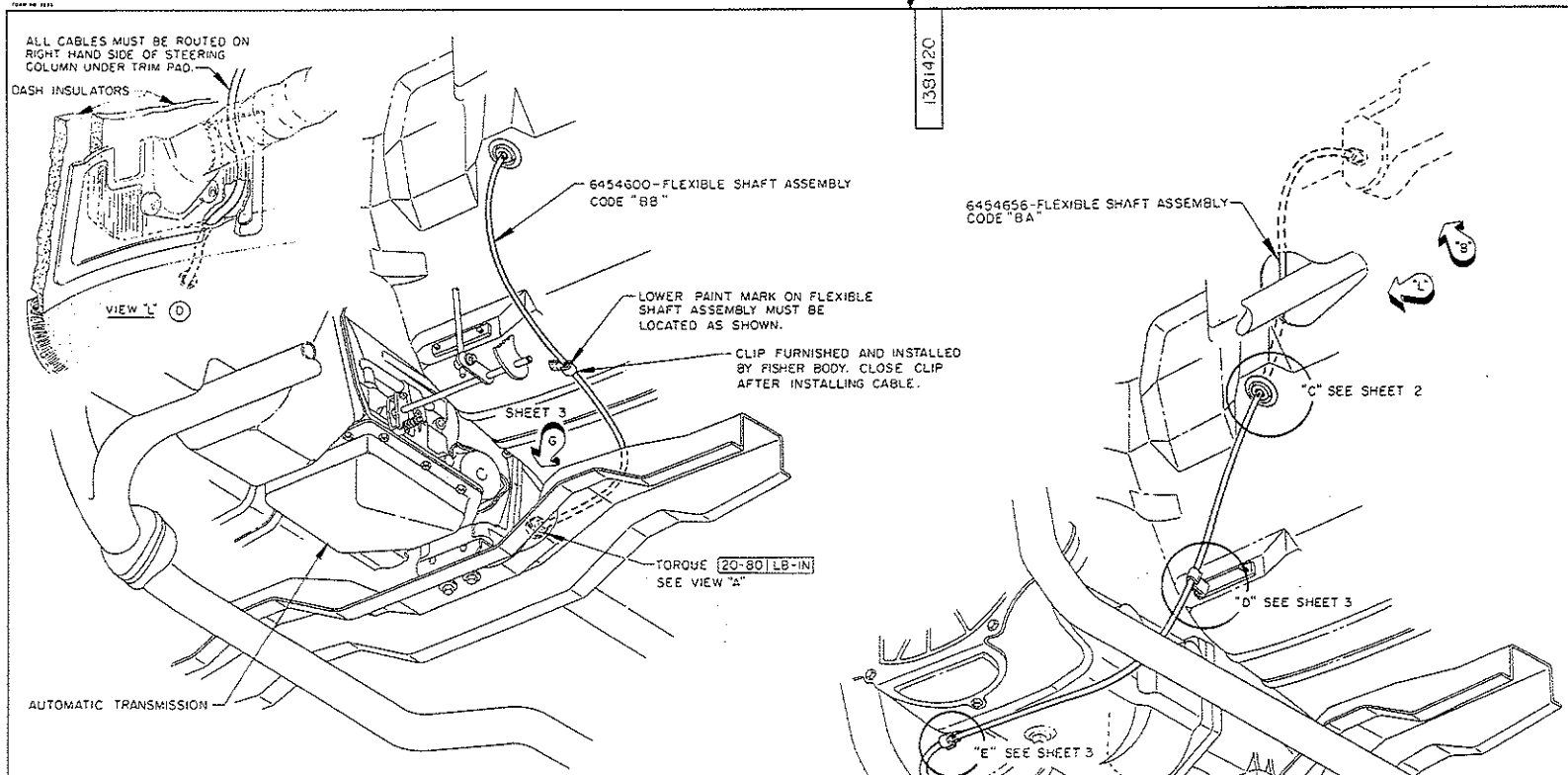

ALL MANUAL AND AUTOMATIC TRANSMISSIONS
(LESS 446 FLOOR SHIFTS)

3 SPEED FLOOR SHIFT MANUAL
(446 SERIES)

TURN INNER CABLE WITH THUMB AND FINGERS AT LOWER END TO MAKE CERTAIN THERE IS NO BIND IN SYSTEM BEFORE CONNECTING CABLE TO TRANSMISSION (BINDING CABLES MUST BE REPLACED)

VIEW "A"

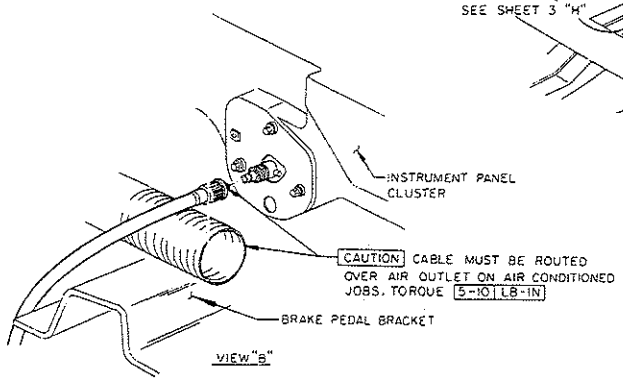

VIEW "B"

1381420

DATE	SYM.	REVISION RECORD	AUTH.	DR.	CK.
1-1-64	A	"A" REMOVED		[illegible]	[illegible]
4-19-64	B	PAINT MARK REMOVED			
		2 PLACES		ADK	[illegible]
7-16-66	C	VIEW "B" REVISED (VIEW			
		"A" ADDED		R.S.	R.L.
[illegible]	D	[illegible] REVISED		HA	CM

DO NOT SCALE — REPORT ERRORS
TOLERANCES UNLESS OTHERWISE SPECIFIED
± ALLOWED ON TWO PLACE DECIMALS
± .010 ALLOWED ON THREE PLACE DECIMALS
COMMERCIAL TOLERANCES APPLY TO STANDARD PARTS - ROLLED SECTIONS - SHEET METAL GAGES - DRILLED AND PUNCHED HOLES.
BURR ALL DRILLED HOLES. COUNTERSINK ALL TAPPED HOLES .030 X 90°.

DWG. DATE 3-30-66	SCALE NONE	DR. BECK-CRAFT
		CK. J. WOZNIAK
FIRST USED 1967-33-34 35-36-43-44-46-48		APPR.
REFERENCE		APPR.
		APPR.
MATERIAL SPEC.		

NAME
SPEEDOMETER CABLE INSTALLATION

PART NO. 1381420 — INDEX 12-41
SHEET 1 OF 3 SHEETS

1381420

BUICK MOTOR DIVISION
GENERAL MOTORS CORPORATION
FLINT, MICH., U. S. A.

1381420

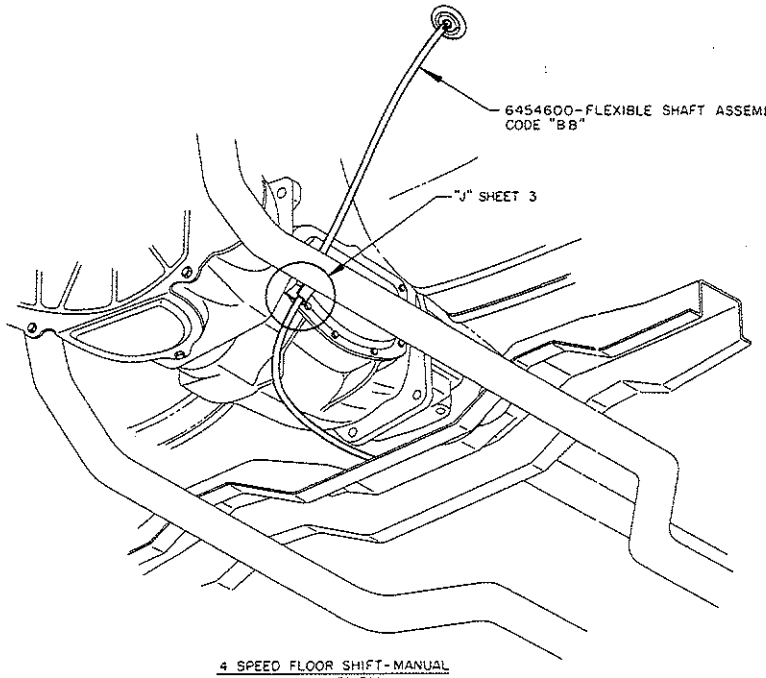

4 SPEED FLOOR SHIFT-MANUAL
(446 SERIES)
ROUTE AS SHOWN WHEN USING RIGHT ANGLE ADAPTERS 396338 & 395430 (SEE VIEW "F", SHEET 3)

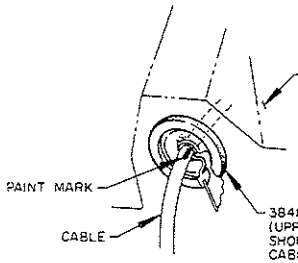

3841879-GROMMET-RUBBER
(UPPER END OF UPPER PAINT MARK SHOULD BE FLUSH WITH GROMMET. CABLE MUST BE LEFT FREE TO SLIDE IN HOLE THROUGH DASH PANEL UNTIL CLUSTER IS SECURED IN INSTRUMENT PANEL.)
USE SEALER AS REQUIRED.

VIEW "C"

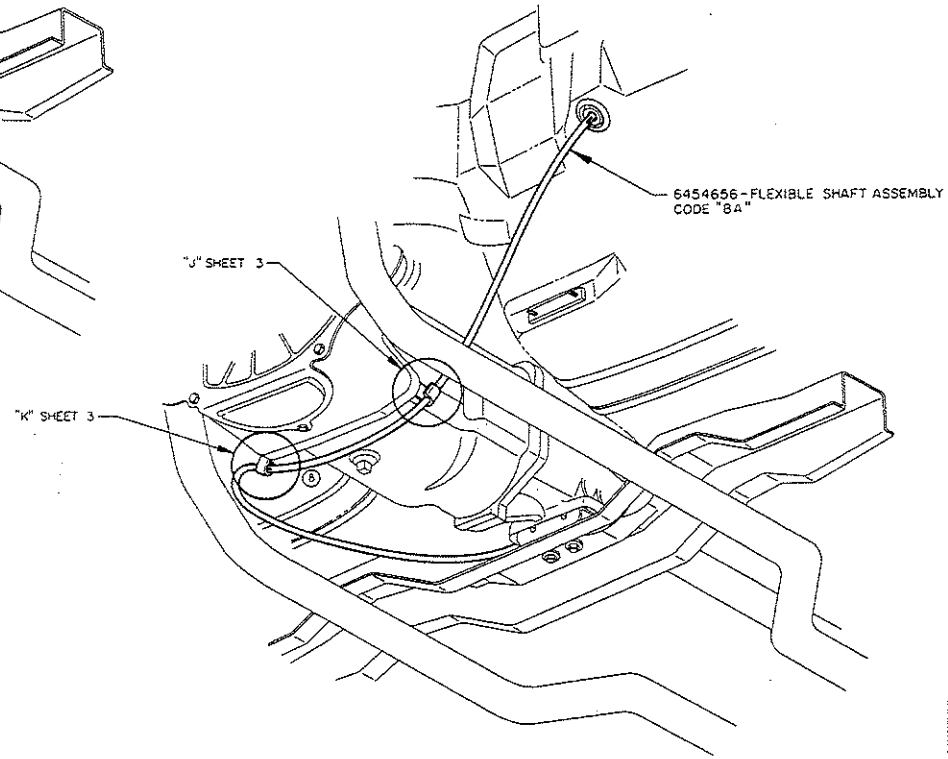

4 SPEED FLOOR SHIFT-MANUAL
(446 SERIES)

1381420

DATE	SYM.	REVISION RECORD	AUTH.	DR.	CK.
4-1-66	A	"X" REMOVED		KOS	J.W.
4-13-66	B	PAINT MARK ADDED		AD	LL

DO NOT SCALE — REPORT ERRORS
TOLERANCES UNLESS OTHERWISE SPECIFIED
± ALLOWED ON TWO PLACE DECIMALS
± .010 ALLOWED ON THREE PLACE DECIMALS
COMMERCIAL TOLERANCES APPLY TO STANDARD PARTS - ROLLED SECTIONS - SHEET METAL GAGES - DRILLED AND PUNCHED HOLES.
BURR ALL DRILLED HOLES. COUNTERSINK ALL TAPPED HOLES .030 X 90°.

DWG. DATE 3-30-66	SCALE NONE	DR. BECK-DOHERTY
FIRST USED 1967-33-34 35-36-43-44-46-48		CK. J. WOZNIAK
REFERENCE		APPR.
		APPR.
		APPR.
MATERIAL SPEC.		
NAME SPEEDOMETER CABLE INSTALLATION		
PART NO. 1381420 SHEET 2 OF 3 SHEETS	INDEX 12-4.2	

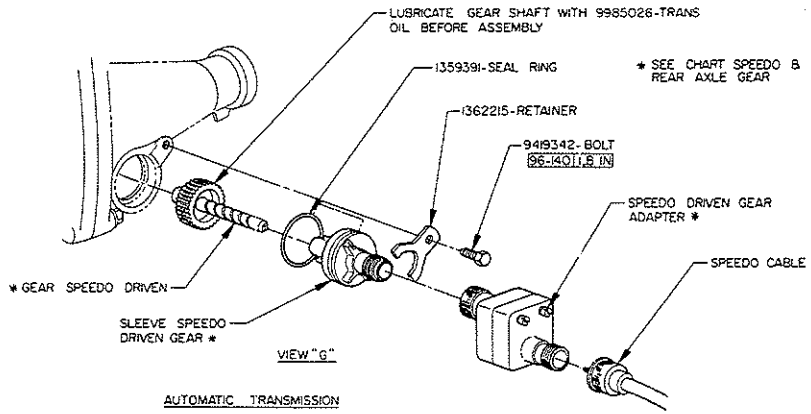

AUTOMATIC TRANSMISSION

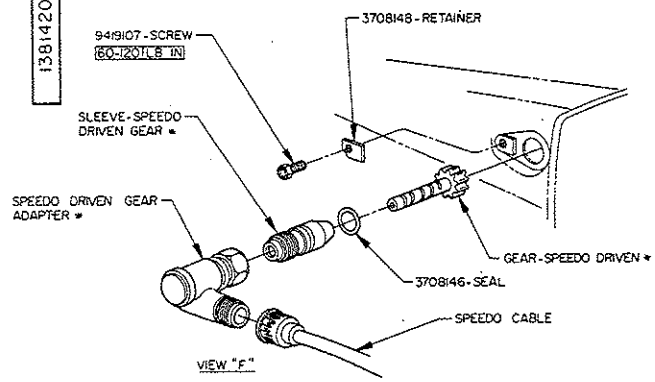

MANUAL TRANSMISSION

DATE	SYM.	REVISION RECORD	AUTH.	DR.	CK.
4-1-66	A	"X" REMOVED		RG	J.W.
4-13-66	B	CLIP RELOCATED, PAINT MARK & CODE ADDED IN VIEW K & VIEW E		ADL	J.W.

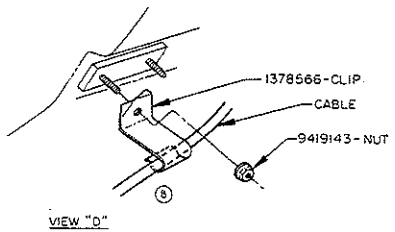

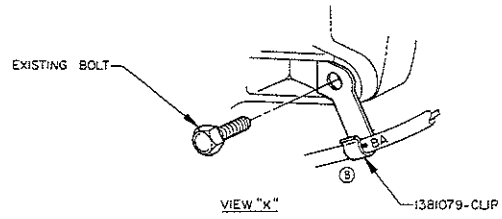

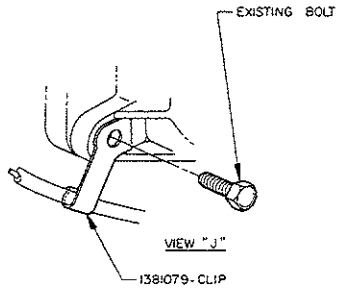

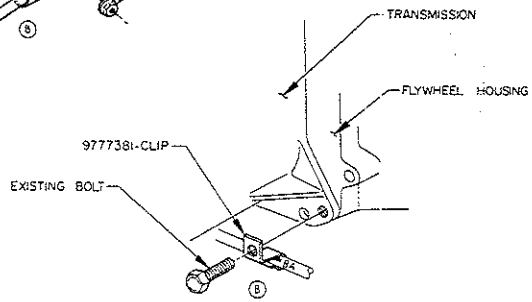

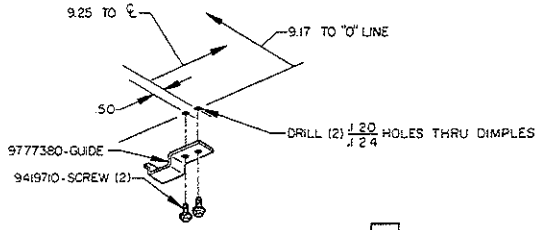

1381420

DO NOT SCALE — REPORT ERRORS

TOLERANCES UNLESS OTHERWISE SPECIFIED
±.01 ALLOWED ON TWO PLACE DECIMALS
±.010 ALLOWED ON THREE PLACE DECIMALS

COMMERCIAL TOLERANCES APPLY TO STANDARD PARTS - ROLLED SECTIONS - SHEET METAL GAGES - DRILLED AND PUNCHED HOLES.

BURR ALL DRILLED HOLES. COUNTERSINK ALL TAPPED HOLES .030 X 90°.

DWG. DATE 3-30-66	SCALE NONE	DR. BECK-DOHERTY
FIRST USED 1967-33-34 35-36-43-44-46-48		CK. J. WOZNIAK
REFERENCE		APPR.
		APPR.
		APPR.
MATERIAL SPEC.		

NAME: SPEEDOMETER CABLE INSTALLATION

PART NO. 1381420 — SHEET 3 OF 3 SHEETS — INDEX 12-4.3

BUICK MOTOR DIVISION
GENERAL MOTORS CORPORATION
FLINT, MICH., U.S.A.

DATE	SYM.	REVISION RECORD	AUTH.	DR.	CK.
3-2-66	A	X-REMOVED		BC	X
4-26-66	B	NOTE REVISED		WM	X

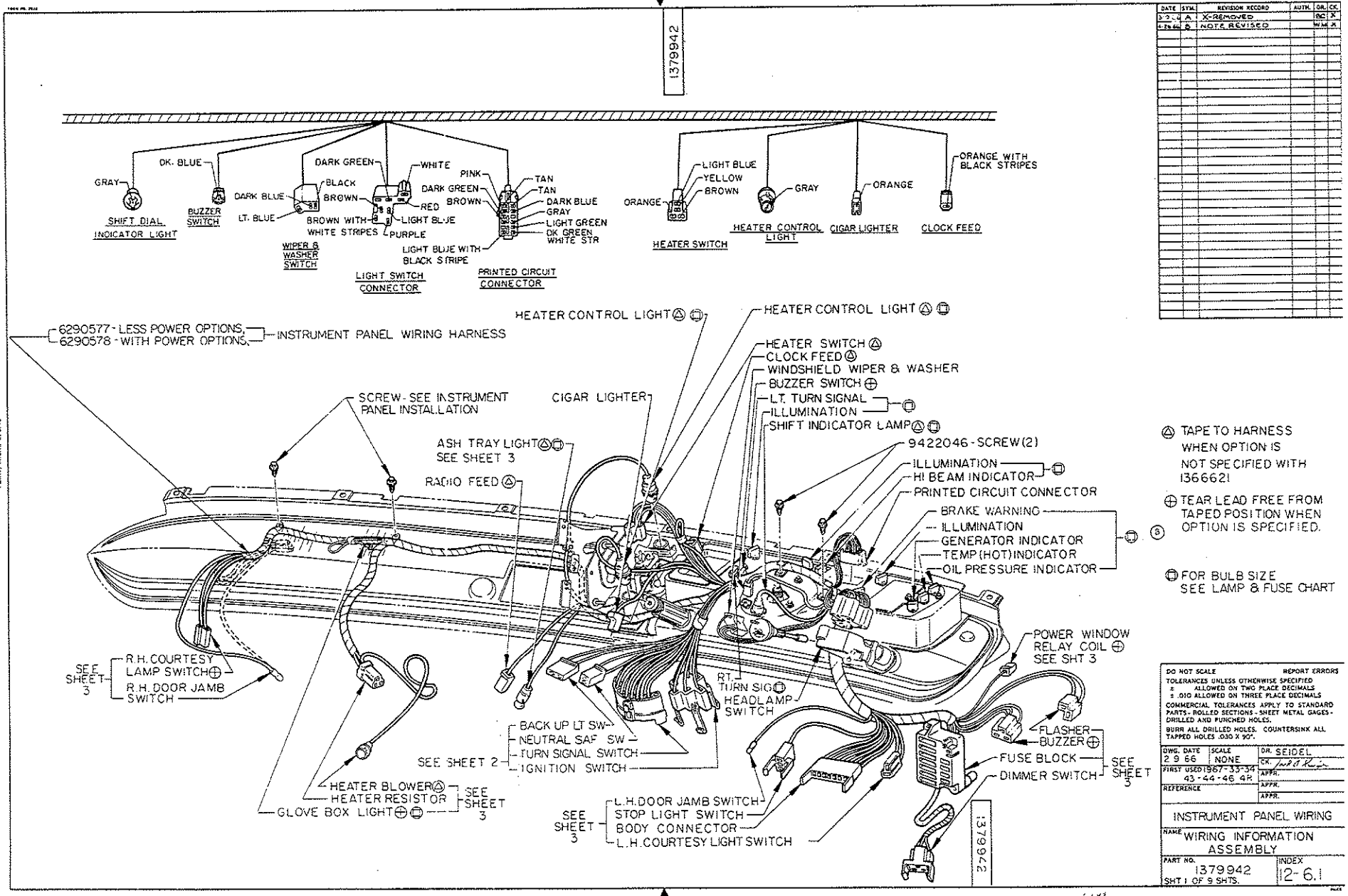

TAPE TO HARNESS WHEN OPTION IS NOT SPECIFIED WITH 1366621

TEAR LEAD FREE FROM TAPED POSITION WHEN OPTION IS SPECIFIED.

FOR BULB SIZE SEE LAMP & FUSE CHART

DO NOT SCALE — REPORT ERRORS

TOLERANCES UNLESS OTHERWISE SPECIFIED
± ALLOWED ON TWO PLACE DECIMALS
± .010 ALLOWED ON THREE PLACE DECIMALS

COMMERCIAL TOLERANCES APPLY TO STANDARD PARTS - ROLLED SECTIONS - SHEET METAL GAGES - DRILLED AND PUNCHED HOLES.

BURR ALL DRILLED HOLES. COUNTERSINK ALL TAPPED HOLES .030 X 90°.

DWG. DATE 2 9 66	SCALE NONE	DR. SEIDEL
FIRST USED 1967-33-34 43-44-46 48		CK.
REFERENCE		APPR.
		APPR.
		APPR.

INSTRUMENT PANEL WIRING

NAME WIRING INFORMATION ASSEMBLY

PART NO. 1379942 SHT 1 OF 9 SHTS.

INDEX 12-6.1

BUICK MOTOR DIVISION
GENERAL MOTORS CORPORATION
FLINT, MICH., U.S.A.

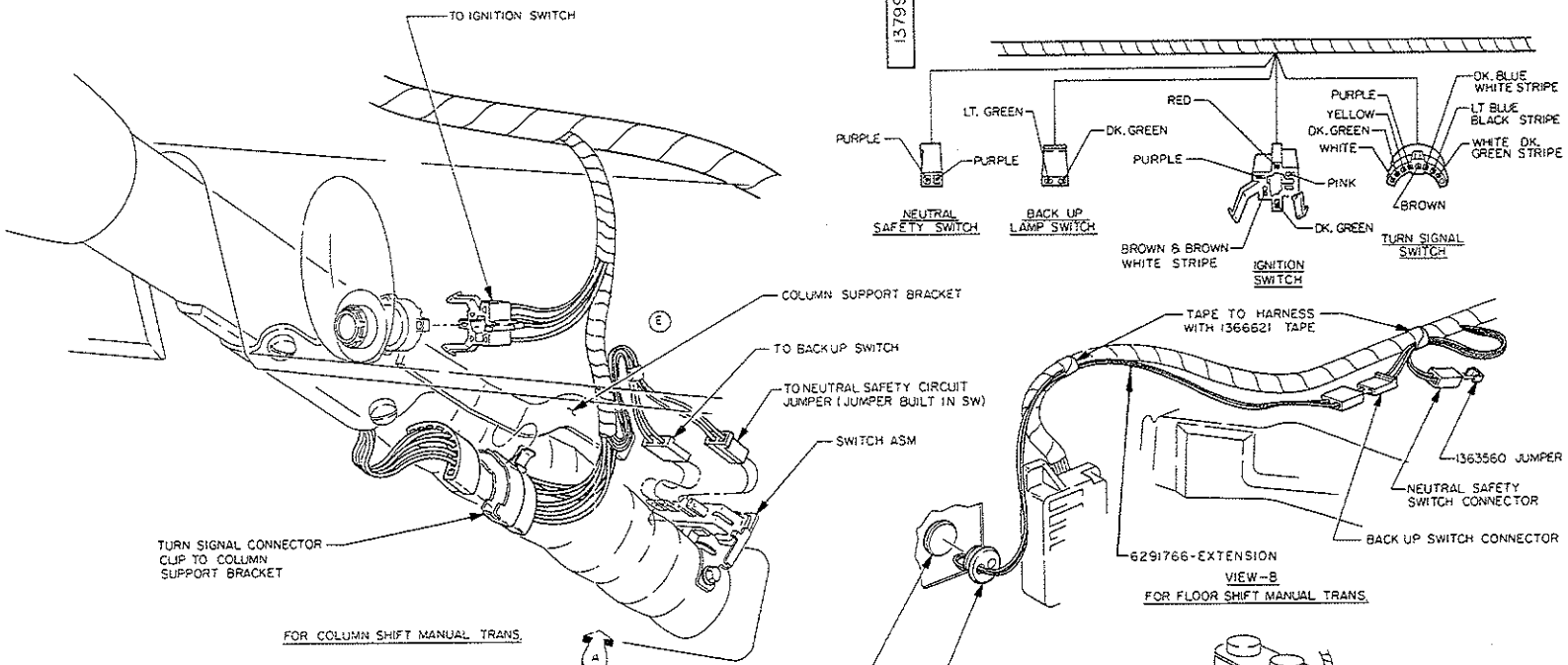

DATE	SYM.	REVISION RECORD	AUTH.	DR.	CK.
3-3-66	A	X-REMOVED		BCJ	X
4-26-66	B	NOTE REVISED		WMC	X
8-12-66	C	GE31766 & NOTE ADDED	70152	NG	X
8-27-66	D	WIRE ROUTING REVISED	71164	WG	X
11-17-66	E	TAPING OF COLUMN WIRES REVISED	71378	WM	X

DO NOT SCALE — REPORT ERRORS

TOLERANCES UNLESS OTHERWISE SPECIFIED
= ALLOWED ON TWO PLACE DECIMALS
= .010 ALLOWED ON THREE PLACE DECIMALS
COMMERCIAL TOLERANCES APPLY TO STANDARD PARTS - ROLLED SECTIONS - SHEET METAL GAGES - DRILLED AND PUNCHED HOLES.
BURR ALL DRILLED HOLES. COUNTERSINK ALL TAPPED HOLES .030 X 90°.

DWG. DATE 3-1-66	SCALE NONE	DR. B J CIEN
FIRST USED 1967-33, 34, 43, 44, 46		CK.
REFERENCE		APPR.
		APPR.
		APPR.

NAME: WIRING INFORMATION ASSEMBLY

PART NO. 1379942 — SHEET 2 OF 9 SHEETS — INDEX 12-6.2

BUICK MOTOR DIVISION
GENERAL MOTORS CORPORATION
FLINT, MICH., U.S.A.

P14S15

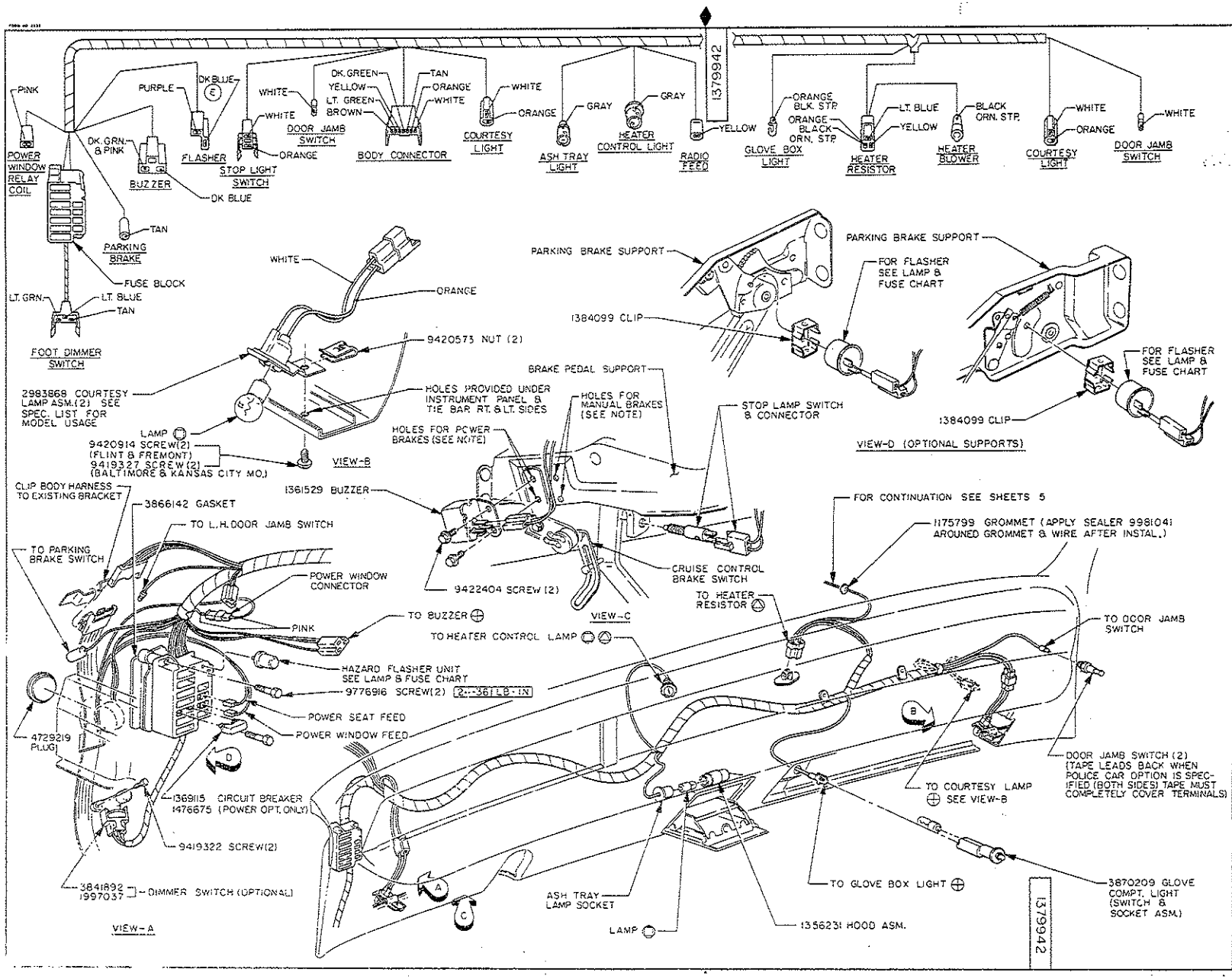

DATE	SYM.	REVISION RECORD	AUTH.	JR.	CK.
5-8-66	A	X-REMOVED		RC	X
8-30-66	B	NOTE REVISED	71248	WM	X
11-2-66	C	POWER WINDOW RELAY WIRING REVISED	71328	WM	X
12-9-66	D	1371750 TO 1384099 (2 PLACES)	71432	WM	X
11-14-67	E	BROWN TO DK BLUE		WG	X

BUICK MOTOR DIVISION
GENERAL MOTORS CORPORATION
FLINT, MICH., U.S.A.

(A) TAPE LEAD BACK TO HARNESS WHEN OPTION IS NOT SPECIFIED WITH 1366621 TAPE.

(B) TEAR FREE FROM TAPE INTO POSITION SHOWN WHEN OPTION IS SPECIFIED

(C) FOR BULB SIZE INFORMATION SEE LAMP & FUSE CHART.

WHEN CRUISE CONTROL BRAKE SWITCH IS SPECIFIED ALONG WITH BUZZER, INSTALL SWITCH SCREWS INTO HOLES INDICATED. WHEN BUZZER ALONE IS SPECIFIED USE HOLES MARKED POWER BRAKES.

DO NOT SCALE — REPORT ERRORS
TOLERANCES UNLESS OTHERWISE SPECIFIED
± ALLOWED ON TWO PLACE DECIMALS
± .010 ALLOWED ON THREE PLACE DECIMALS
COMMERCIAL TOLERANCES APPLY TO STANDARD PARTS - ROLLED SECTIONS - SHEET METAL GAGES - DRILLED AND PUNCHED HOLES.
BURR ALL DRILLED HOLES. COUNTERSINK ALL TAPPED HOLES .030 X 90°.

DWG. DATE 2-22-66	SCALE NONE	DR. B. J. CIEN
FIRST USED 1967-33, 34, 43, 44, 46		CK.
REFERENCE		APPR.
		APPR.
		APPR.

INSTRUMENT PANEL WIRING

NAME
WIRING INFORMATION ASSEMBLY

PART NO. 1379942 — INDEX 12-6.3
SHEET 3 OF 9 SHEETS

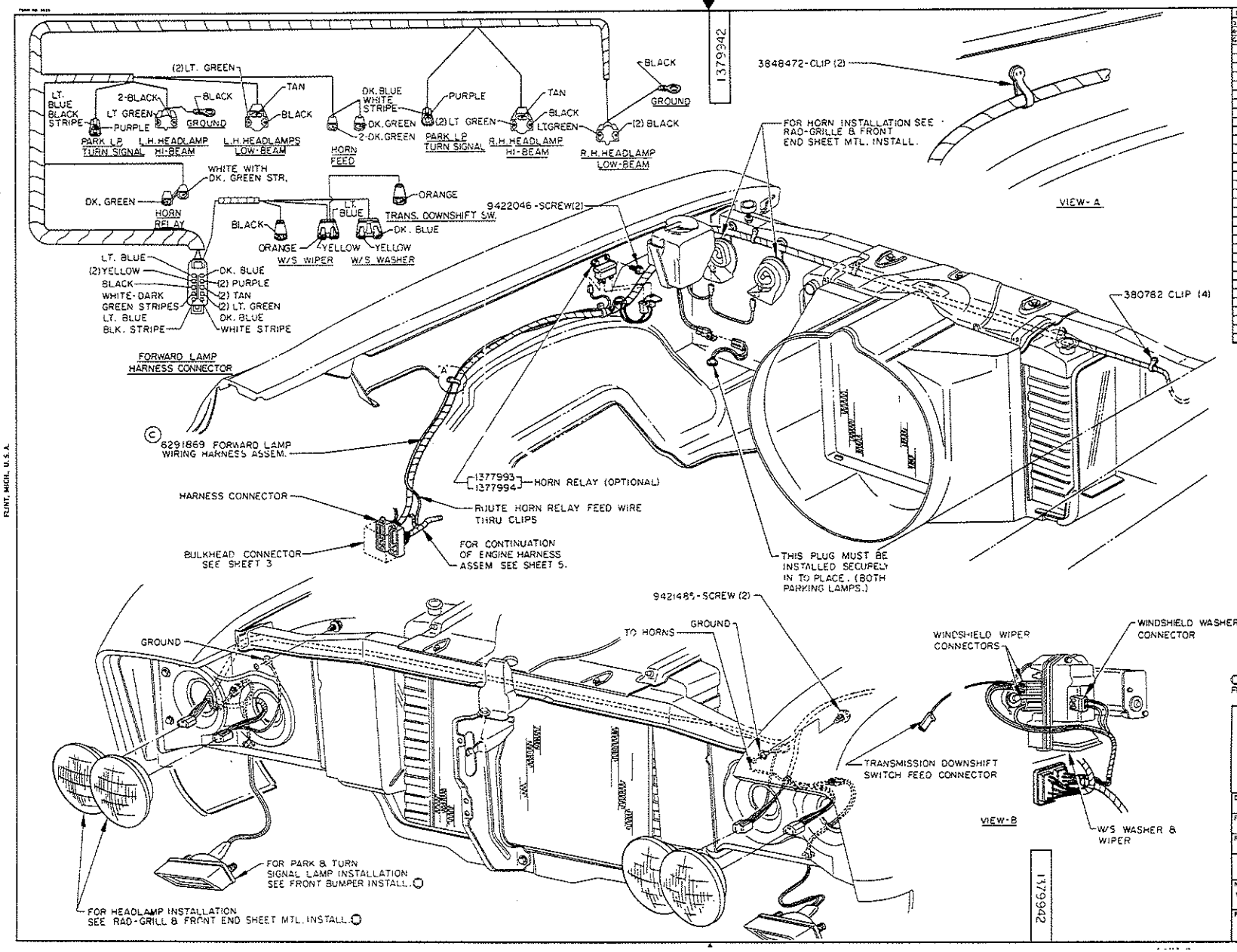

DATE	SYM.	REVISION RECORD	AUTH.	DR.	CK.
3-4-66	A	X-REFERENCED		RC	LV
4-19-66	B	9422404 TO 9422046		RM	JK
6-17-66	C	6290100 TO 6291869 TO 7-24-66		RM	JK

○ FOR BULB SIZES SEE LAMP AND FUSE CHART.

DO NOT SCALE — REPORT ERRORS
TOLERANCES UNLESS OTHERWISE SPECIFIED
± ALLOWED ON TWO PLACE DECIMALS
± .010 ALLOWED ON THREE PLACE DECIMALS
COMMERCIAL TOLERANCES APPLY TO STANDARD PARTS - ROLLED SECTIONS - SHEET METAL GAGES - DRILLED AND PUNCHED HOLES.
BURR ALL DRILLED HOLES. COUNTERSINK ALL TAPPED HOLES .030 X 90°.

DWG. DATE 3-4-66	SCALE	DR. R. CHALUPIAK
FIRST USED 1967 33-34 43-44-46		CK.
REFERENCE		APPR.
		APPR.
		APPR.

FORWARD LAMP WIRING HARNESS

NAME: WIRING INFORMATION ASSEMBLY

PART NO. 1379942 — SHEET 4 OF 9 SHEETS — INDEX 12-6.4

BUICK MOTOR DIVISION
GENERAL MOTORS CORPORATION
FLINT, MICH. U.S.A.

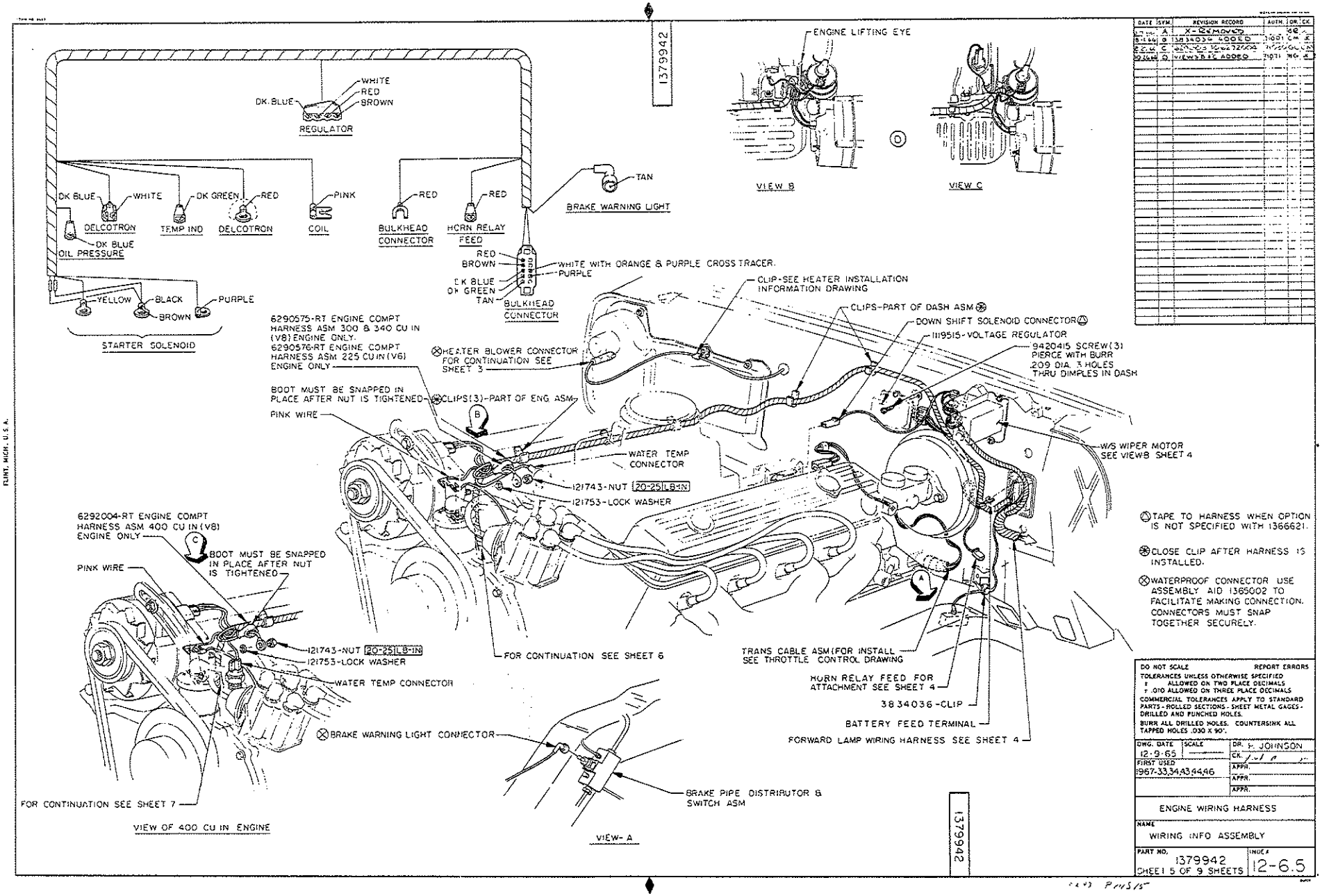
1379942
ENGINE LIFTING EYE
VIEW B
VIEW C
WHITE
RED
BROWN
DK. BLUE
REGULATOR
DK BLUE
WHITE
DK GREEN
RED
PINK
RED
RED
TAN
BRAKE WARNING LIGHT
DELCOTRON
TEMP IND
DELCOTRON
COIL
BULKHEAD CONNECTOR
HORN RELAY FEED
DK BLUE
OIL PRESSURE
RED
BROWN
WHITE WITH ORANGE & PURPLE CROSS TRACER.
PURPLE
DK BLUE
DK GREEN
TAN
BULKHEAD CONNECTOR
YELLOW
BLACK
BROWN
PURPLE
STARTER SOLENOID
CLIP-SEE HEATER INSTALLATION INFORMATION DRAWING
CLIPS-PART OF DASH ASM
DOWN SHIFT SOLENOID CONNECTOR
1119515-VOLTAGE REGULATOR
9420415 SCREW(3) PIERCE WITH BURR .209 DIA. 3 HOLES THRU DIMPLES IN DASH
6290575-RT ENGINE COMPT HARNESS ASM 300 & 340 CU IN (V8) ENGINE ONLY.
6290576-RT ENGINE COMPT HARNESS ASM 225 CU IN (V6) ENGINE ONLY
HEATER BLOWER CONNECTOR FOR CONTINUATION SEE SHEET 3
BOOT MUST BE SNAPPED IN PLACE AFTER NUT IS TIGHTENED
CLIPS(3)-PART OF ENG ASM
PINK WIRE
B
WATER TEMP CONNECTOR
121743-NUT 20-25 LB-IN
121753-LOCK WASHER
W/S WIPER MOTOR SEE VIEW B SHEET 4
6292004-RT ENGINE COMPT HARNESS ASM 400 CU IN (V8) ENGINE ONLY
C
BOOT MUST BE SNAPPED IN PLACE AFTER NUT IS TIGHTENED
PINK WIRE
121743-NUT 20-25 LB-IN
121753-LOCK WASHER
WATER TEMP CONNECTOR
FOR CONTINUATION SEE SHEET 6
A
TRANS CABLE ASM (FOR INSTALL SEE THROTTLE CONTROL DRAWING
HORN RELAY FEED FOR ATTACHMENT SEE SHEET 4
3834036-CLIP
BATTERY FEED TERMINAL
FORWARD LAMP WIRING HARNESS SEE SHEET 4
BRAKE WARNING LIGHT CONNECTOR
FOR CONTINUATION SEE SHEET 7
VIEW OF 400 CU IN ENGINE
BRAKE PIPE DISTRIBUTOR & SWITCH ASM
VIEW-A
1379942
TAPE TO HARNESS WHEN OPTION IS NOT SPECIFIED WITH 1366621.
CLOSE CLIP AFTER HARNESS IS INSTALLED.
WATERPROOF CONNECTOR USE ASSEMBLY AID 1365002 TO FACILITATE MAKING CONNECTION. CONNECTORS MUST SNAP TOGETHER SECURELY.
DO NOT SCALE
REPORT ERRORS
TOLERANCES UNLESS OTHERWISE SPECIFIED
± ALLOWED ON TWO PLACE DECIMALS
± .010 ALLOWED ON THREE PLACE DECIMALS
COMMERCIAL TOLERANCES APPLY TO STANDARD PARTS - ROLLED SECTIONS - SHEET METAL GAGES - DRILLED AND PUNCHED HOLES.
BURR ALL DRILLED HOLES. COUNTERSINK ALL TAPPED HOLES .030 X 90°.
DWG. DATE 12-9-65
SCALE
DR. H. JOHNSON
CK.
FIRST USED 1967-33,34,43,44,46
APPR.
APPR.
APPR.
ENGINE WIRING HARNESS
NAME
WIRING INFO ASSEMBLY
PART NO. 1379942
SHEET 5 OF 9 SHEETS
INDEX 12-6.5
BUICK MOTOR DIVISION
GENERAL MOTORS CORPORATION
FLINT, MICH. U.S.A.

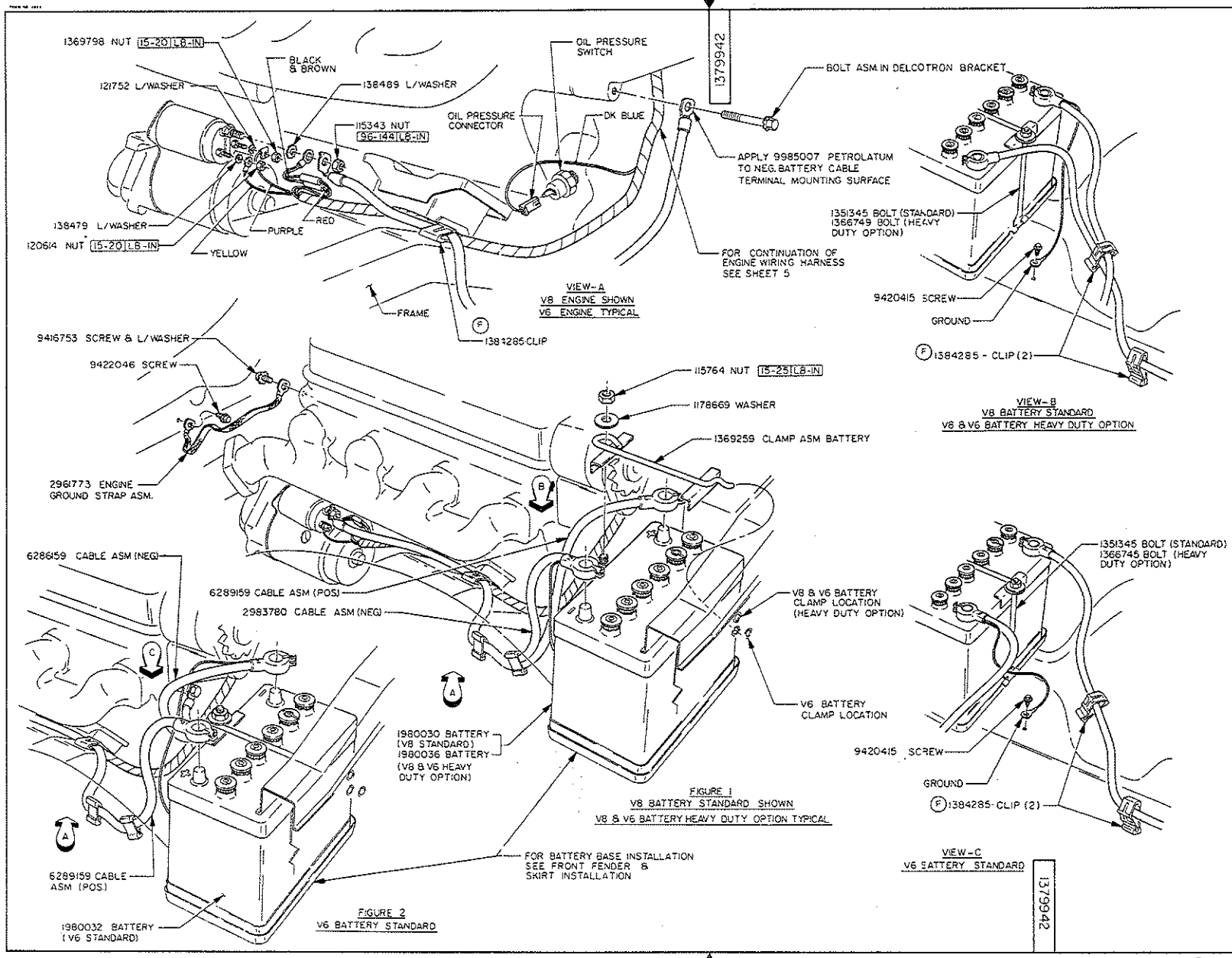

DATE	SYM	REVISION RECORD	AUTH.	DR.	CK.
1-27-66	A	X-2983042		BJ	X
6-6-66	B	NOTE ADDED			SWM
7-22-66	C	NOTE ADDED	30933	WG	X
8-31-66	D	2961773 TO 2961773		WG	X
9-26-66	E	6289117 TO 6289159 (12 PLACES)	71259	WM	X
12-14-66	F	1381012 TO 1384285 (3 PLACES)	71470	WM	X

AFTER INSTALLING BATTERY CABLES TO BATTERY, COAT ENTIRE TOP SURFACE OF BATTERY CABLE TERMINAL & BATTERY POST WITH 9985007 PETROLATUM.

FOR FUSIBLE LINK REPAIR INFORMATION SEE SHEET 7

BATTERY SPECIFIC GRAVITY MUST NOT BE LESS THAN 1.230 FOR MONTHS (NOV. THRU MARCH) & NOT LESS THAN 1.220 FOR THE REMAINING MONTHS (ALL YEAR AT CALIF, TEXAS & GA.) AS SHIPPED IN CAR FROM ASSEMBLY PLANT

DO NOT SCALE — REPORT ERRORS
TOLERANCES UNLESS OTHERWISE SPECIFIED
± ALLOWED ON TWO PLACE DECIMALS
± .010 ALLOWED ON THREE PLACE DECIMALS
COMMERCIAL TOLERANCES APPLY TO STANDARD PARTS - ROLLED SECTIONS - SHEET METAL GAGES - DRILLED AND PUNCHED HOLES.
BURR ALL DRILLED HOLES. COUNTERSINK ALL TAPPED HOLES .030 X 90°.

DWG. DATE 1-27-66	SCALE NONE	DR. B J CIEN
FIRST USED 1967 33, 34, 43, 44, 46		CK.
REFERENCE		APPR.
		APPR.
		APPR.

BATTERY CABLE INSTALLATION
LESS 46 SERIES

NAME
WIRING INFORMATION ASSEMBLY

PART NO. 1379942
SHEET 6 OF 9 SHEETS
INDEX 12-6.6

GENERAL MOTORS CORPORATION
FLINT, MICH., U.S.A.

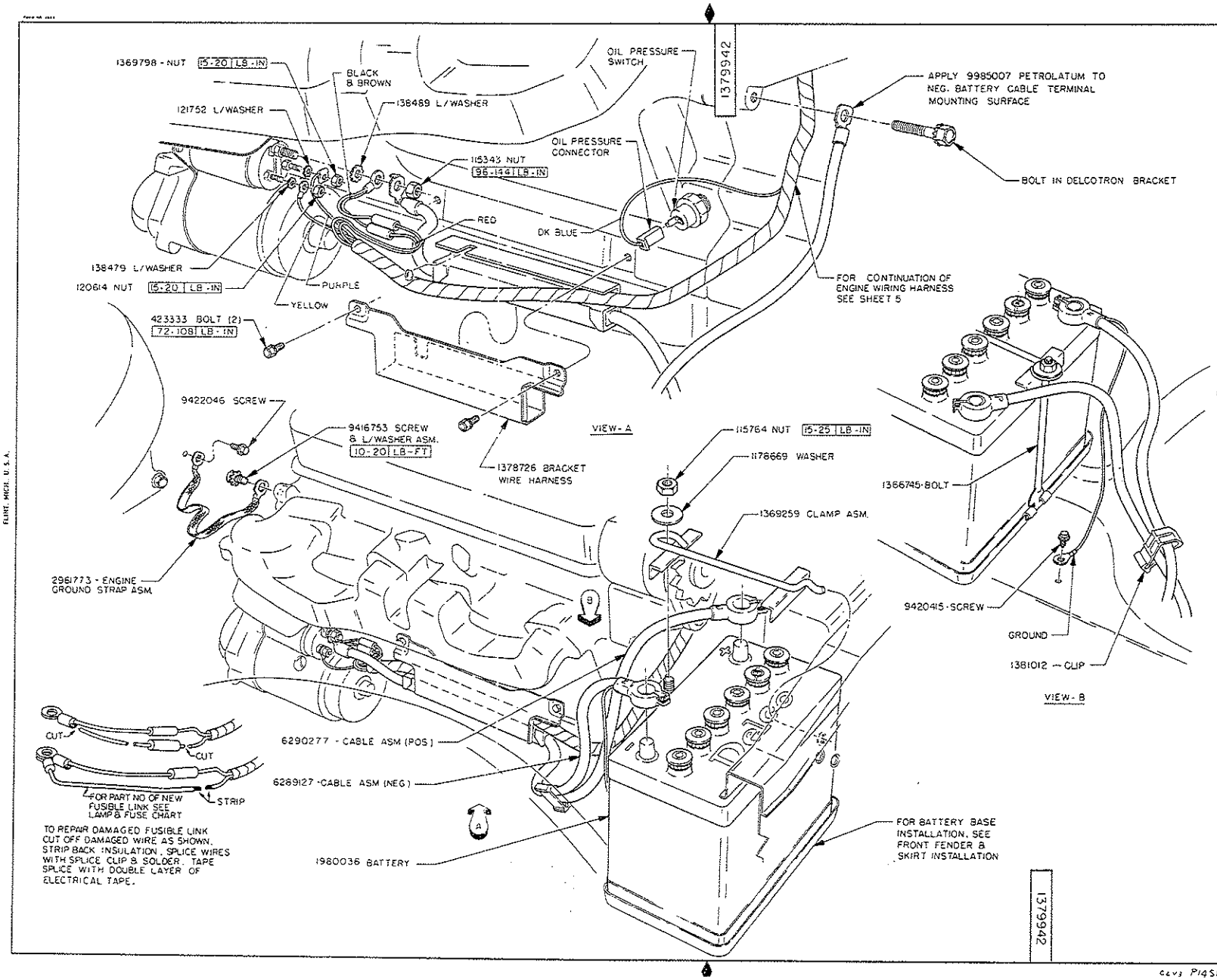

TO REPAIR DAMAGED FUSIBLE LINK CUT OFF DAMAGED WIRE AS SHOWN. STRIP BACK INSULATION. SPLICE WIRES WITH SPLICE CLIP & SOLDER. TAPE SPLICE WITH DOUBLE LAYER OF ELECTRICAL TAPE.

DATE	SYM.	REVISION RECORD	AUTH.	DR.	CK.
3-24-66	A	X-REMOVED		AG	A
8-9-66	B	FUSIBLE LINK REPAIR INFO. ADDED		SH	RD
11-14-66	C	NOTE ADDED	70532	RG	JK

© AFTER INSTALLING BATTERY CABLES TO BATTERY, COAT ENTIRE TOP SURFACE OF BATTERY CABLE TERMINAL & BATTERY POST WITH 9985007 PETROLATUM.

BATTERY SPECIFIC GRAVITY MUST NOT BE LESS THAN 1.230 FOR MONTHS (NOV. THRU MARCH) & NOT LESS THAN 1.220 FOR THE REMAINING MONTHS (ALL YEAR AT CALIF, TEXAS & GA.) AS SHIPPED IN CAR FROM ASSEMBLY PLANT.

DO NOT SCALE — REPORT ERRORS
TOLERANCES UNLESS OTHERWISE SPECIFIED
± ALLOWED ON TWO PLACE DECIMALS
± .010 ALLOWED ON THREE PLACE DECIMALS
COMMERCIAL TOLERANCES APPLY TO STANDARD PARTS - ROLLED SECTIONS - SHEET METAL GAGES - DRILLED AND PUNCHED HOLES.
BURR ALL DRILLED HOLES. COUNTERSINK ALL TAPPED HOLES .030 X 90°.

DWG. DATE 1-10-66	SCALE NONE	DR. B J CIEN
FIRST USED 1967 33, 34, 43, 44, 46		CK.
REFERENCE		APPR.
		APPR.
		APPR.

BATTERY CABLE INSTALLATION FOR 46 SERIES

NAME: WIRING INFORMATION ASSEMBLY

PART NO. 1379942 — SHEET 7 OF 9 SHEETS — INDEX 12-6.7

DUPLA MOTOR DIVISION
GENERAL MOTORS CORPORATION
FLINT, MICH. U.S.A.

C4V3 P14S15

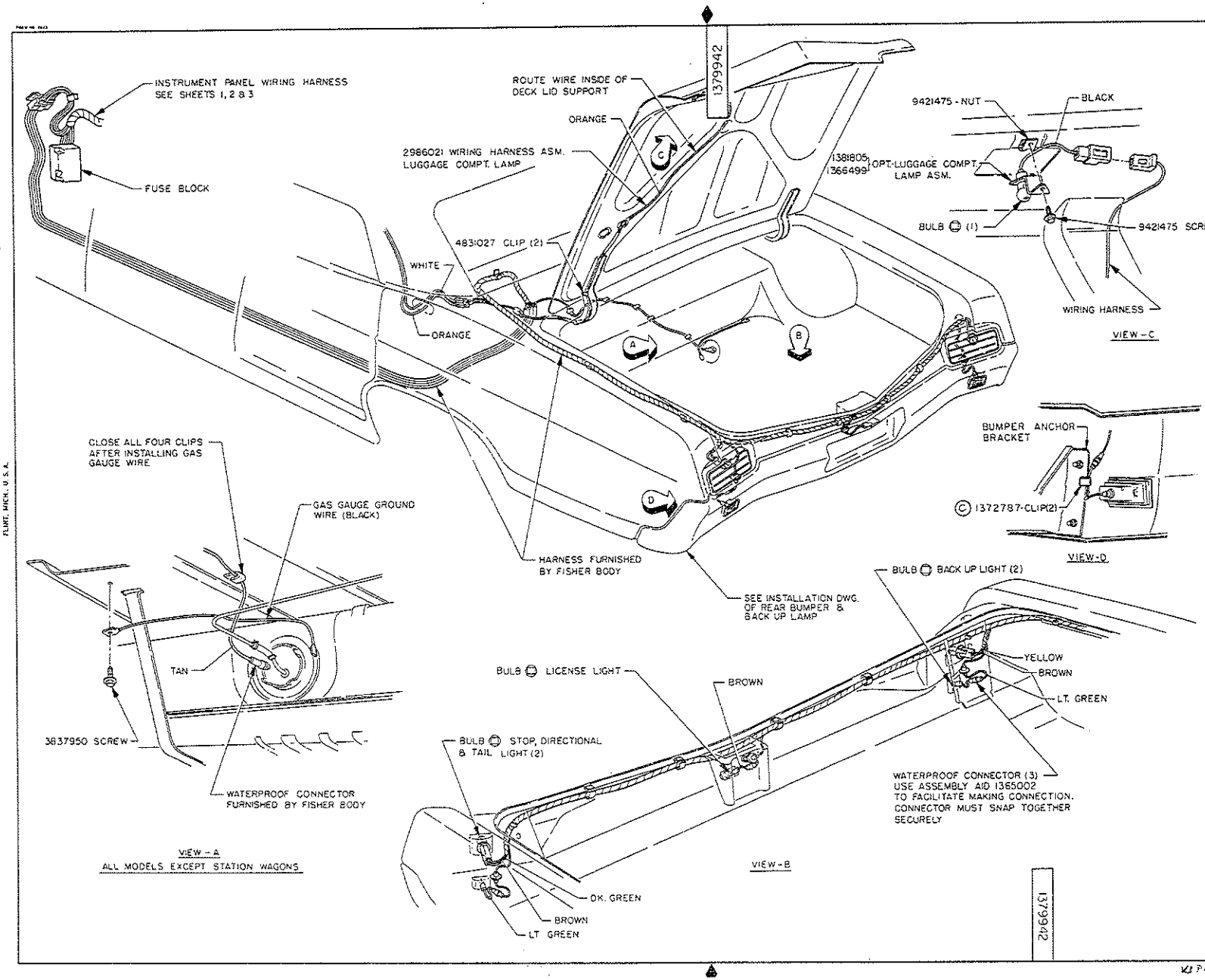

FOR BULB SIZE SEE LAMP & FUSE CHART

DATE	SYM.	REVISION RECORD	AUTH.	DR.	CK.
1-9-66	A	X REMOVED		BJC	X
3-14-66	B	1381805-OPT ADDED		WG	X
3-14-67	C	1372787-CLIP(2) ADDED		WG	X

BUICK MOTOR DIVISION
GENERAL MOTORS CORPORATION
FLINT, MICH., U.S.A.

DO NOT SCALE — REPORT ERRORS

TOLERANCES UNLESS OTHERWISE SPECIFIED
± ALLOWED ON TWO PLACE DECIMALS
± .010 ALLOWED ON THREE PLACE DECIMALS
COMMERCIAL TOLERANCES APPLY TO STANDARD PARTS - ROLLED SECTIONS - SHEET METAL GAGES - DRILLED AND PUNCHED HOLES.
BURR ALL DRILLED HOLES. COUNTERSINK ALL TAPPED HOLES .030 X 90°.

DWG. DATE 1-4-66	SCALE NONE	DR. B.J.CIEN
FIRST USED 1967 33, 34, 43, 44, 46		CK.
REFERENCE		APPR.
		APPR.
		APPR.

SEDAN REAR LAMPS & FUEL GAGE

NAME: WIRING INFORMATION ASSEMBLY

PART NO. 1379942

SHEET 8 OF 9 SHEETS

INDEX 12-6.8

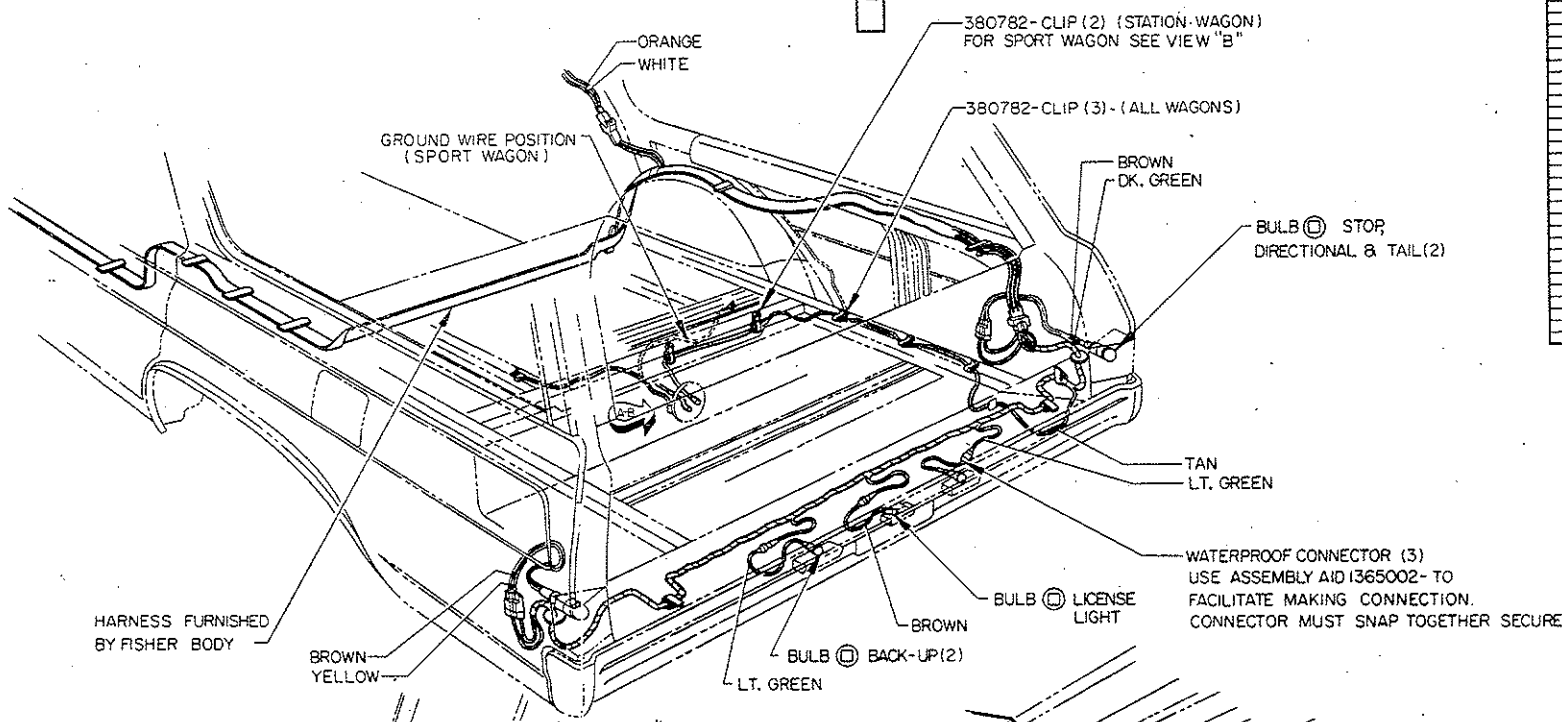

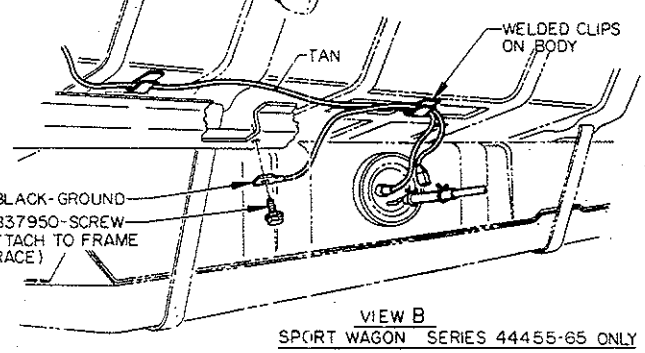

VIEW B
SPORT WAGON SERIES 44455-65 ONLY

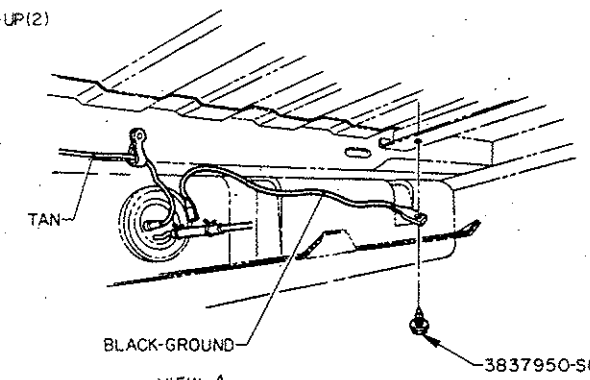

VIEW A
STATION WAGONS
SERIES 433, 434, 435 & 436

ⓓ FOR BULB SIZES SEE
LAMP & FUSE CHART

1379942

DATE	SYM.	REVISION RECORD	AUTH.	DR.	CK.
3-66	A	X REDRAWN		SO.	X

DO NOT SCALE — REPORT ERRORS
TOLERANCES UNLESS OTHERWISE SPECIFIED
± ALLOWED ON TWO PLACE DECIMALS
± .010 ALLOWED ON THREE PLACE DECIMALS
COMMERCIAL TOLERANCES APPLY TO STANDARD PARTS - ROLLED SECTIONS - SHEET METAL GAUGES - DRILLED AND PUNCHED HOLES.
BURR ALL DRILLED HOLES. COUNTERSINK ALL TAPPED HOLES .030 X 90°.

DWG. DATE 2-9-66	SCALE NONE	DR. SOWERBY
FIRST USED 1967-33-34 43-44-46		CK.
REFERENCE		APPR.
		APPR.
		APPR.

NAME: STATION WAGON REAR LAMPS AND FUEL GAGE WIRING INFORMATION ASSEMBLY

PART NO. 1379942 — SHEET 9 OF 9 SHTS — INDEX 12-6.9

GENERAL MOTORS CORPORATION
FLINT, MICH., U.S.A.

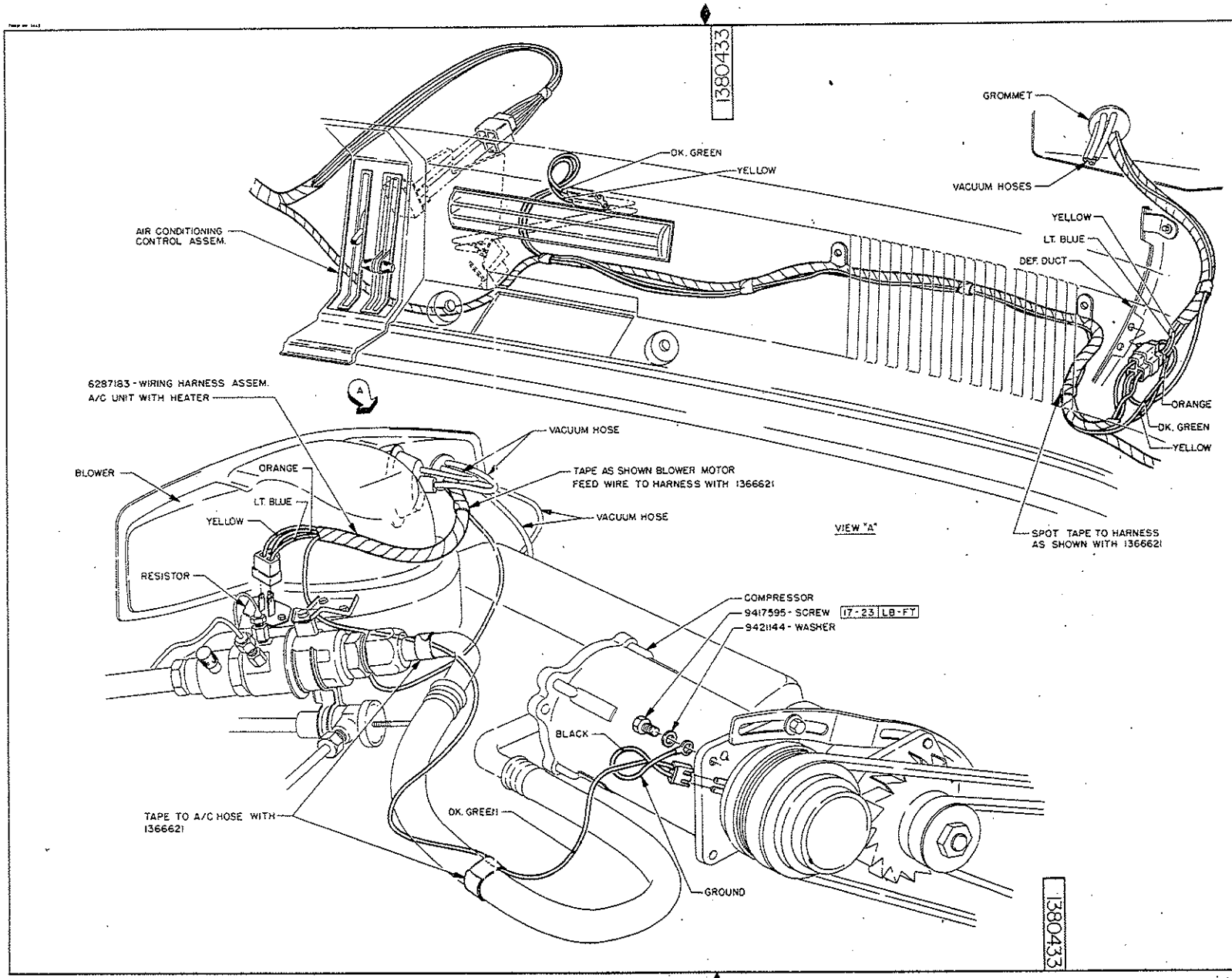

DATE	SYM.	REVISION RECORD	AUTH.	DR.	CK.
11-1-66	A	X REMOVED		BJC	X

DO NOT SCALE — REPORT ERRORS
TOLERANCES UNLESS OTHERWISE SPECIFIED
± ALLOWED ON TWO PLACE DECIMALS
± .010 ALLOWED ON THREE PLACE DECIMALS
COMMERCIAL TOLERANCES APPLY TO STANDARD PARTS - ROLLED SECTIONS - SHEET METAL GAGES - DRILLED AND PUNCHED HOLES.
BURR ALL DRILLED HOLES. COUNTERSINK ALL TAPPED HOLES .030 X 90°.

DWG. DATE 12-22-65	SCALE NONE	DR. B.J. CIEN
FIRST USED 1967 33, 34, 42, 43, 44, 46		CK.
REFERENCE		APPR.
		APPR.
		APPR.

AIR CONDITIONING

NAME: WIRING INFORMATION ASSEMBLY

PART NO. 1380433 — INDEX 12-7.1

GENERAL MOTORS CORPORATION
FLINT, MICH., U.S.A.

4204 SO GREEN

BUICK MOTOR DIVISION
GENERAL MOTORS CORPORATION
FLINT, MICH., U.S.A.

1381026

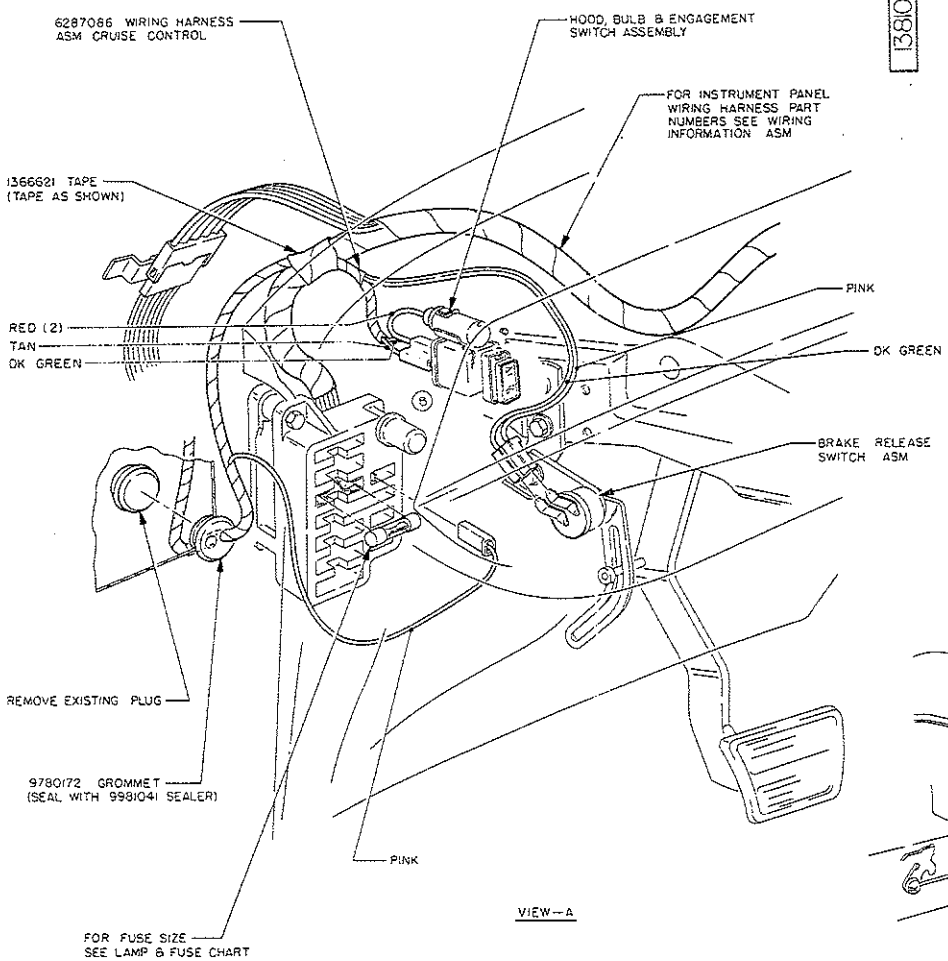

VIEW—A

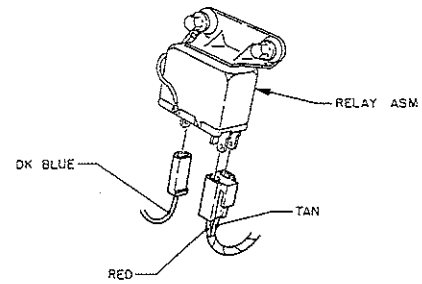

VIEW—B

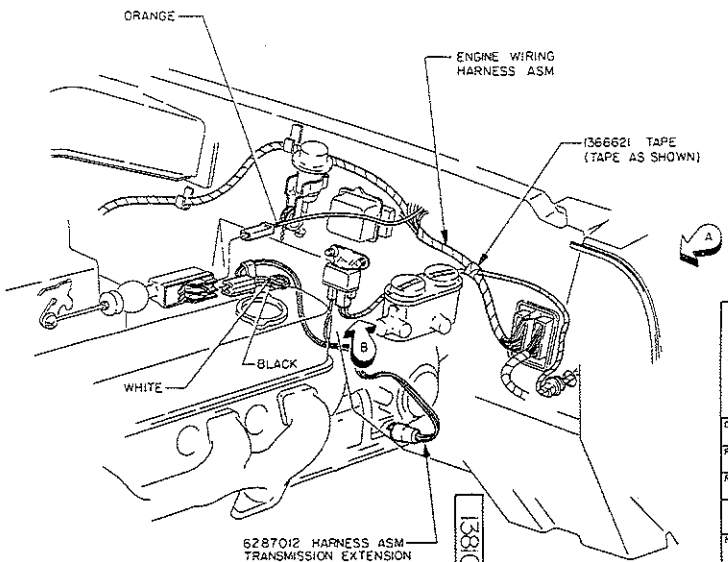

1381026

DATE	SYM.	REVISION RECORD	AUTH.	CHECK
3-6-66	A	X-REMOVED		BC1A
4-11-66	B	CRUISE CONTROL SWITCH REVISED	707-6	MA

DO NOT SCALE — REPORT ERRORS
TOLERANCES UNLESS OTHERWISE SPECIFIED
± ALLOWED ON TWO PLACE DECIMALS
± .010 ALLOWED ON THREE PLACE DECIMALS
COMMERCIAL TOLERANCES APPLY TO STANDARD PARTS - ROLLED SECTIONS - SHEET METAL GAGES - DRILLED AND PUNCHED HOLES.
BURR ALL DRILLED HOLES. COUNTERSINK ALL TAPPED HOLES .030 X 90°.

DWG. DATE 2-15-66	SCALE NONE	DR. B J CIEN
FIRST USED 1967-33, 34, 42, 43, 44, 46		CK. Jack L. Ranger
REFERENCE		APPR.
		APPR.
		APPR.

HYDRAULICALLY OPERATED SPEED CONTROL

NAME: WIRING INFORMATION ASSEMBLY

PART NO. 1381026 — INDEX 12-8.1

C2 V3 P14515

138078

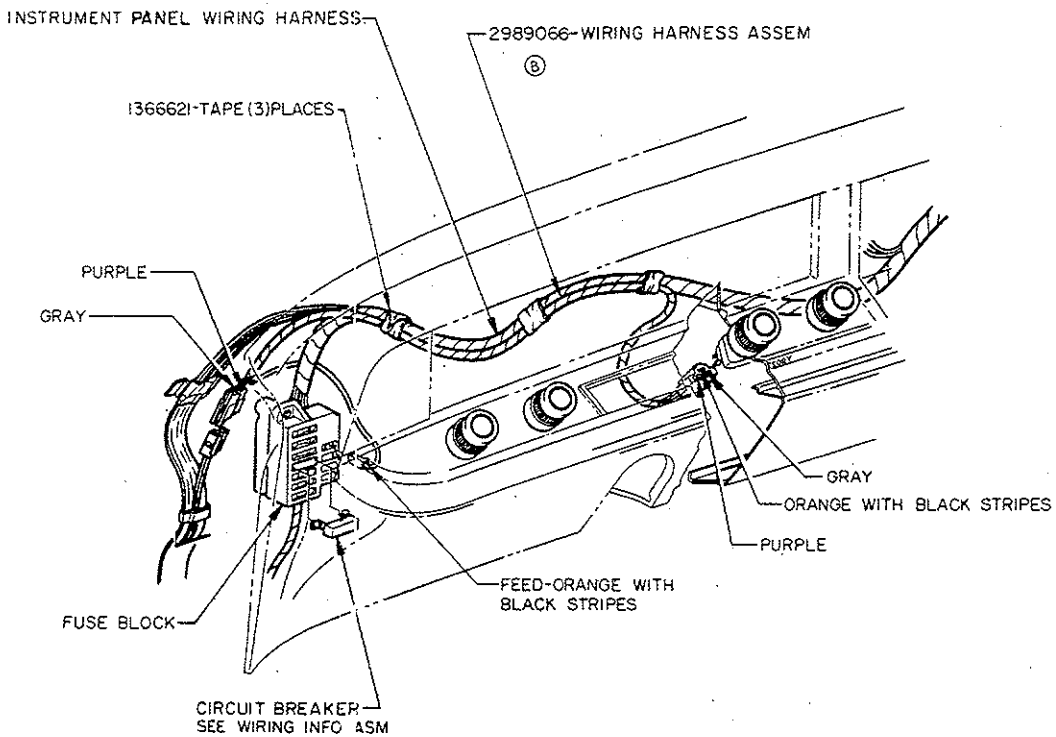

DATE	STM.	REVISION RECORD	AUTH.	DR.	CK.
1-13-66	A	"X" REMOVED		Pmj	JK
5-7-66	B	"POWER TAILGATE WINDOW" REMOVED		MC	JK

DO NOT SCALE — REPORT ERRORS

TOLERANCES UNLESS OTHERWISE SPECIFIED
± ALLOWED ON TWO PLACE DECIMALS
± .010 ALLOWED ON THREE PLACE DECIMALS
COMMERCIAL TOLERANCES APPLY TO STANDARD PARTS - ROLLED SECTIONS - SHEET METAL GAGES - DRILLED AND PUNCHED HOLES.
BURR ALL DRILLED HOLES. COUNTERSINK ALL TAPPED HOLES .030 X 90°.

DWG. DATE 12-8-65	SCALE ——	DR. MODERN ENG.
FIRST USED 1967-33 34-42-43-44-46		CK. Jack R. Kinzer
REFERENCE		APPR.
		APPR.
		APPR.

NAME
WIRING INFO ASM-POWER TOP

PART NO. 138078 — INDEX 12-9.1

GENERAL MOTORS CORPORATION
FLINT, MICH., U.S.A.

138078

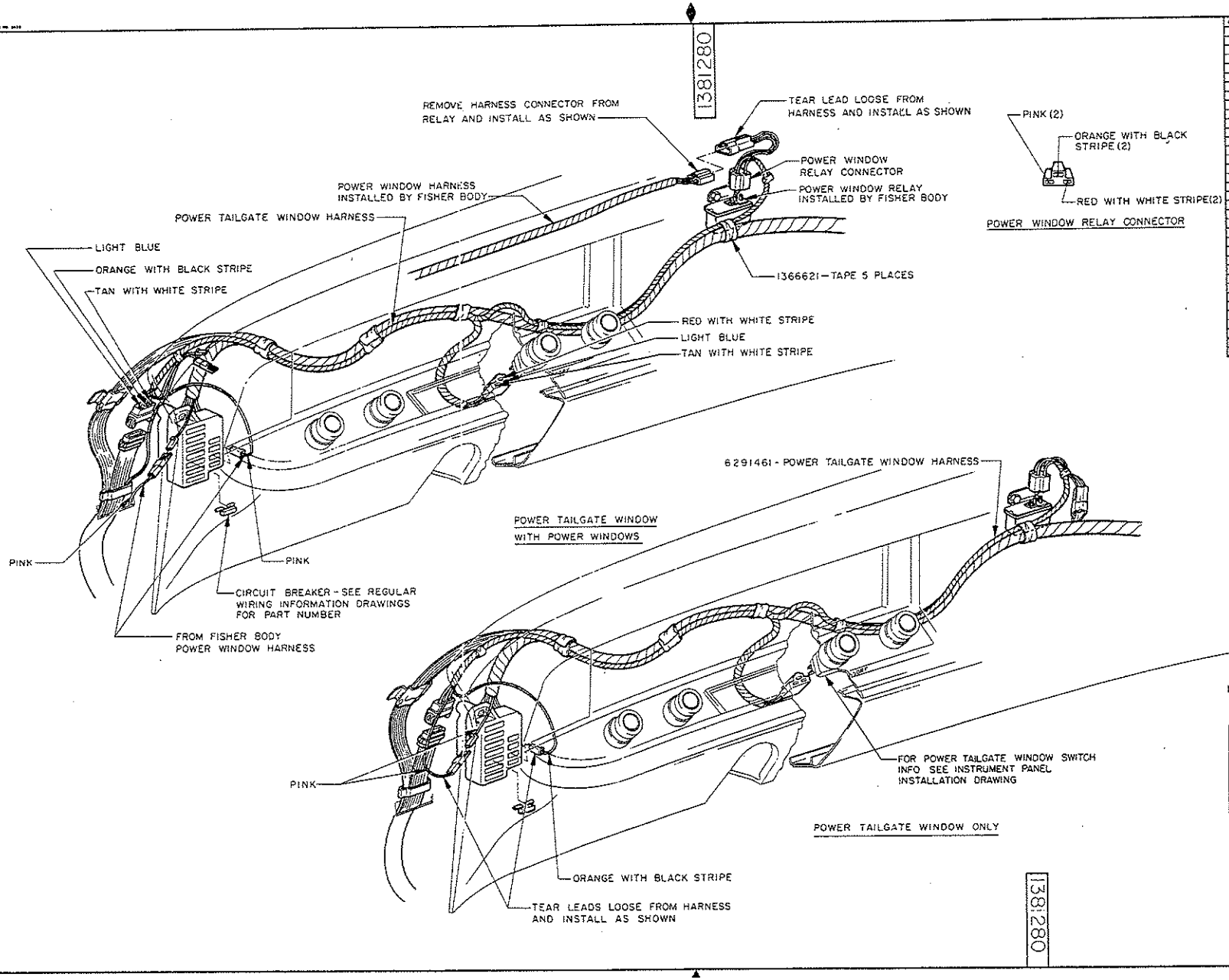

DATE	SYM.	REVISION RECORD	AUTH.	DR.	CK.

BUICK MOTOR DIVISION
GENERAL MOTORS CORPORATION
FLINT, MICH., U.S.A.

1967 — 33-34, 35-36 — REGULAR WAGONS; 42-44 — SPORTWAGONS

DO NOT SCALE — REPORT ERRORS
TOLERANCES UNLESS OTHERWISE SPECIFIED
± ALLOWED ON TWO PLACE DECIMALS
± .010 ALLOWED ON THREE PLACE DECIMALS
COMMERCIAL TOLERANCES APPLY TO STANDARD PARTS - ROLLED SECTIONS - SHEET METAL GAGES - DRILLED AND PUNCHED HOLES.
BURR ALL DRILLED HOLES. COUNTERSINK ALL TAPPED HOLES .030 X 90°.

DWG. DATE 3-4-66	SCALE —	DR. P. JOHNSON
FIRST USED SEE NOTE		CK. Jack A. Kinn
REFERENCE		APPR.
		APPR.
		APPR.
MATERIAL SPEC.		

NAME: WIRING INFORMATION ASSEMBLY POWER TAILGATE WINDOW

PART NO. 1381280 — INDEX 12-9.2

BUICK MOTOR DIVISION
GENERAL MOTORS CORPORATION
FLINT, MICH., U.S.A.

1379912

DATE	SYM.	REVISION RECORD	AUTH.	DR.	CK.
1-10-66	A	"X" REMOVED		PW	X

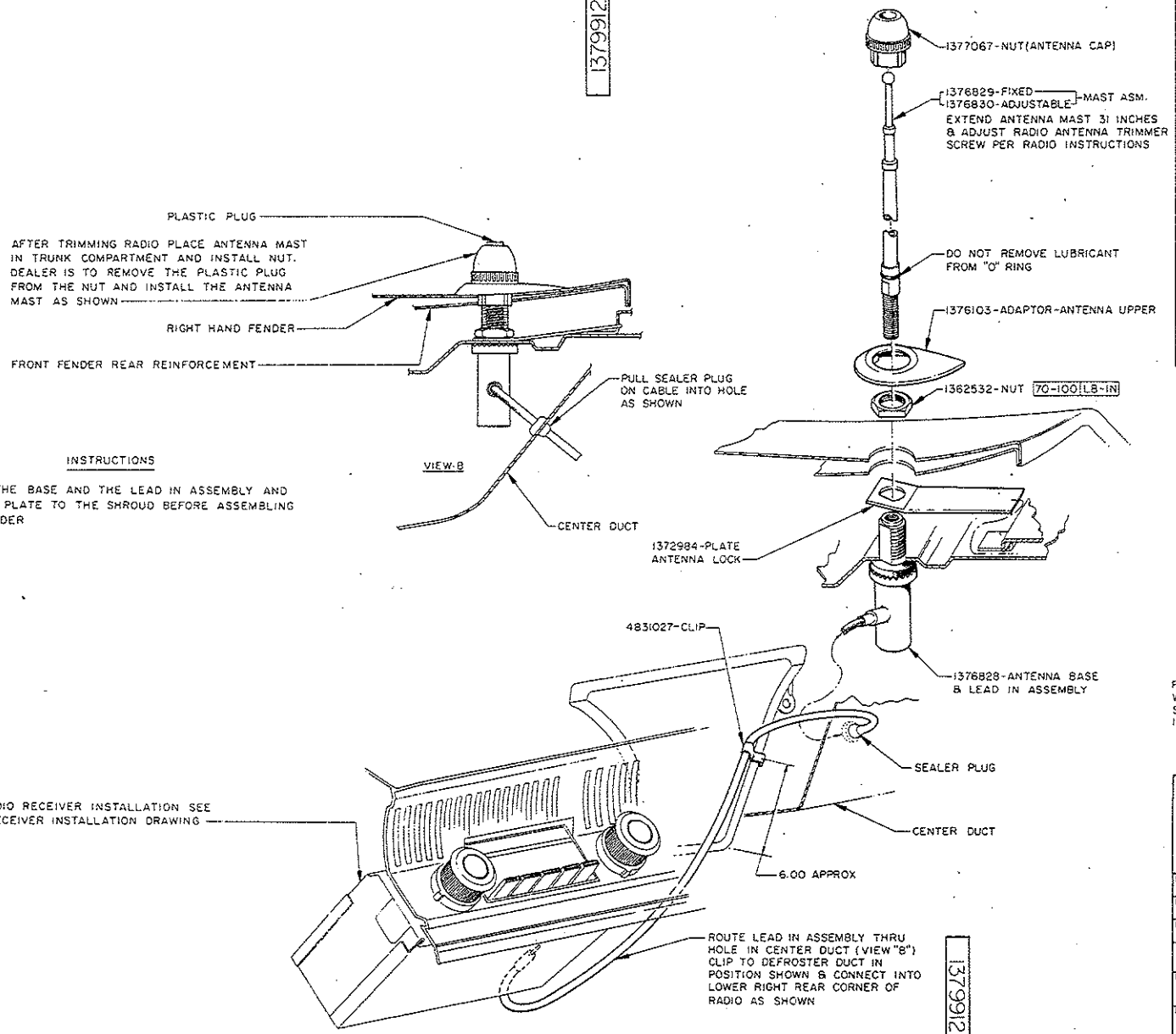

INSTRUCTIONS

MOUNT THE BASE AND THE LEAD IN ASSEMBLY AND LOCKING PLATE TO THE SHROUD BEFORE ASSEMBLING THE FENDER

FOR HOLE PLUG IN CAR BODY WHEN RADIO IS NOT SPECIFIED SEE DASH UNITS & FRONT FLOOR INSTALLATION.

1379912

DO NOT SCALE — REPORT ERRORS

TOLERANCES UNLESS OTHERWISE SPECIFIED
± ALLOWED ON TWO PLACE DECIMALS
± .010 ALLOWED ON THREE PLACE DECIMALS

COMMERCIAL TOLERANCES APPLY TO STANDARD PARTS - ROLLED SECTIONS - SHEET METAL GAGES - DRILLED AND PUNCHED HOLES.

BURR ALL DRILLED HOLES. COUNTERSINK ALL TAPPED HOLES .030 X 90°.

DWG. DATE 11-19-65	SCALE —	DR. P. JOHNSON
FIRST USED 1967-33-34-42-43-44-45		CK.
REFERENCE		APPR.
		APPR.
		APPR.

NAME: ANTENNA INSTALLATION

PART NO. 1379912 | INDEX 12-10.1

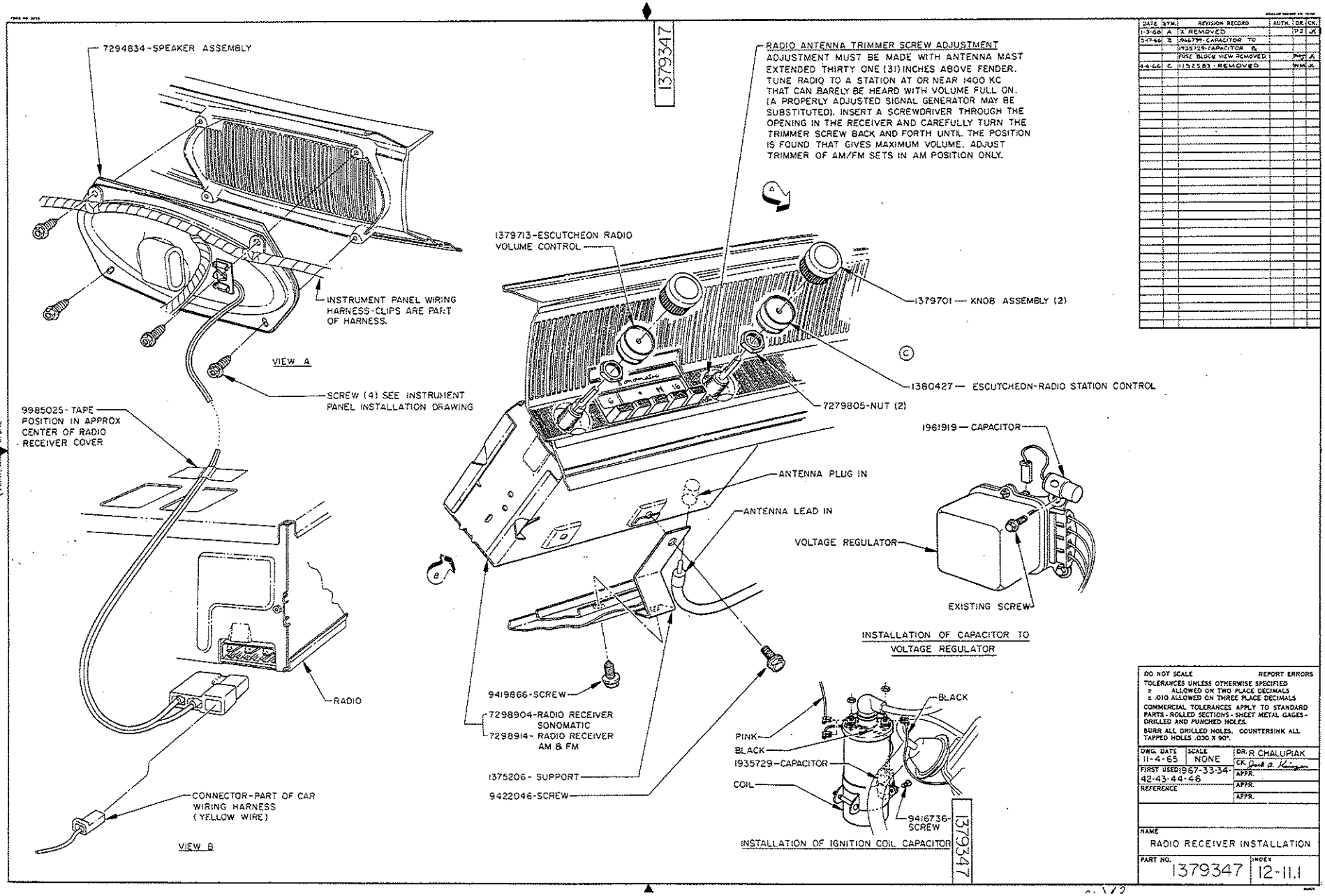

DATE	SYM.	REVISION RECORD	AUTH.	DR.	CK.
1-3-66	A	1X REMOVED		PJ	JK
3-17-66	B	1966799-CAPACITOR TO 1935729-CAPACITOR & FUSE BLOCK VIEW REMOVED		RCJ	JK
4-4-66	C	1135583 - REMOVED		WM	JK

DO NOT SCALE — REPORT ERRORS
TOLERANCES UNLESS OTHERWISE SPECIFIED
± ALLOWED ON TWO PLACE DECIMALS
± .010 ALLOWED ON THREE PLACE DECIMALS
COMMERCIAL TOLERANCES APPLY TO STANDARD PARTS - ROLLED SECTIONS - SHEET METAL GAGES - DRILLED AND PUNCHED HOLES.
BURR ALL DRILLED HOLES. COUNTERSINK ALL TAPPED HOLES .030 X 90°.

DWG. DATE	SCALE	DR. R CHALUPIAK
11-4-65	NONE	CK. Jack A. Kinzer
FIRST USED 1967-33-34-42-43-44-46		APPR.
REFERENCE		APPR.
		APPR.

NAME: RADIO RECEIVER INSTALLATION

PART NO. 1379347 — INDEX 12-11.1

BUICK MOTOR DIVISION
GENERAL MOTORS CORPORATION
FLINT, MICH. U.S.A.

BUICK MOTOR DIVISION
GENERAL MOTORS CORPORATION
FLINT, MICH., U.S.A.

1380428

8-32 HEX. MACH. NUT WITH EXT TOOTH LOCK WASHER (4 REQUIRED)

PLUG TO SPEAKER TERMINAL AS SHOWN

7294892-SPEAKER ASM

BLACK OR DARK BLUE REAR SPEAKER WIRE

GROUND WIRE ASM

INNER TRIM PANEL

8-15 x 1/2 PAN HEAD CROSS RECESS TAPPING SCREW WITH EXT TOOTH LOCK WASHER (TYPE "A") (SCREW INTO REAR QUARTER SIDE INNER PANEL)

SPEAKER GRILL

8-32 x 1 1/2 OVAL HEAD SLOTTED MACH SCREWS (4-REQD) CAUTION DO NOT OVERTIGHTEN SCREWS

KNOB — SEE RADIO INFO ASM DRAWING

7299124-FADER CONTROL

CAUTION
DO NOT OPERATE RADIO SPEAKER WITHOUT JUMPER OR FADER

JUMPER WILL BE ON ALL SETS, THIS MUST BE REMOVED WITH TWEEZERS OR SMALL NEEDLE-NOSE PLIERS.

VIEW OF RADIO

TO FRONT SPEAKER

RADIO RECEIVER

REAR SPEAKER WIRE (DARK BLUE OR BLACK)

TO WIRING HARNESS (YELLOW WIRE)

VIEW A

STATION WAGON SPEAKER INSTALLATION

SPEAKER GRILL (INSTALLED BY FISHER BODY)

8-32 x 1 OVAL HEAD SLOTTED MACH SCREW TYPE "A" (4-REQD) CAUTION DO NOT OVERTIGHTEN SCREWS

COIL EXCESS WIRE AT THIS POINT AND ATTACH CLIP

BLACK OR DARK BLUE SPEAKER WIRE

FIBER BOARD SHELF COVER

METAL SHELF

7300614 SPEAKER ASM (INSTALLED BY FISHER BODY)

CLIP (3) AS SHOWN

WIRE PROTECTOR AT REAR SEAT FURNISHED & INSTALLED BY FISHER BODY

7240055 - GROUND SPRING

8-32 HEX WITH EXT TOOTH LOCK WASHER NUT TYPE "A" (4 REQUIRED)

REAR SPEAKER WIRE INSTALLED BY FISHER BODY

SEDAN SPEAKER INSTALLATION

1380428

DATE	SYM.	REVISION RECORD	AUTH.	DR.	CK.
1-3-66	A	"4" REMOVED		PJ	JK
3/10/66	B	7294892 SPKR. ASM TO 7300614 SPKR. ASM		BC	JK
5/2/66	C	"WASHER" REMOVED		NG	JK

DO NOT SCALE — REPORT ERRORS
TOLERANCES UNLESS OTHERWISE SPECIFIED
± ALLOWED ON TWO PLACE DECIMALS
± .010 ALLOWED ON THREE PLACE DECIMALS
COMMERCIAL TOLERANCES APPLY TO STANDARD PARTS - ROLLED SECTIONS - SHEET METAL GAGES - DRILLED AND PUNCHED HOLES.
BURR ALL DRILLED HOLES. COUNTERSINK ALL TAPPED HOLES .030 X 90°.

DWG. DATE 12-29-65	SCALE —	DR. P. JOHNSON
FIRST USED 1967 33,34,42,43,44,46		CK. JKA
		APPR.
		APPR.
		APPR.

NAME: REAR SPEAKER INSTALLATION

PART NO. 1380428 | INDEX 12-12.1

BUICK MOTOR DIVISION
GENERAL MOTORS CORPORATION
FLINT, MICH., U.S.A.

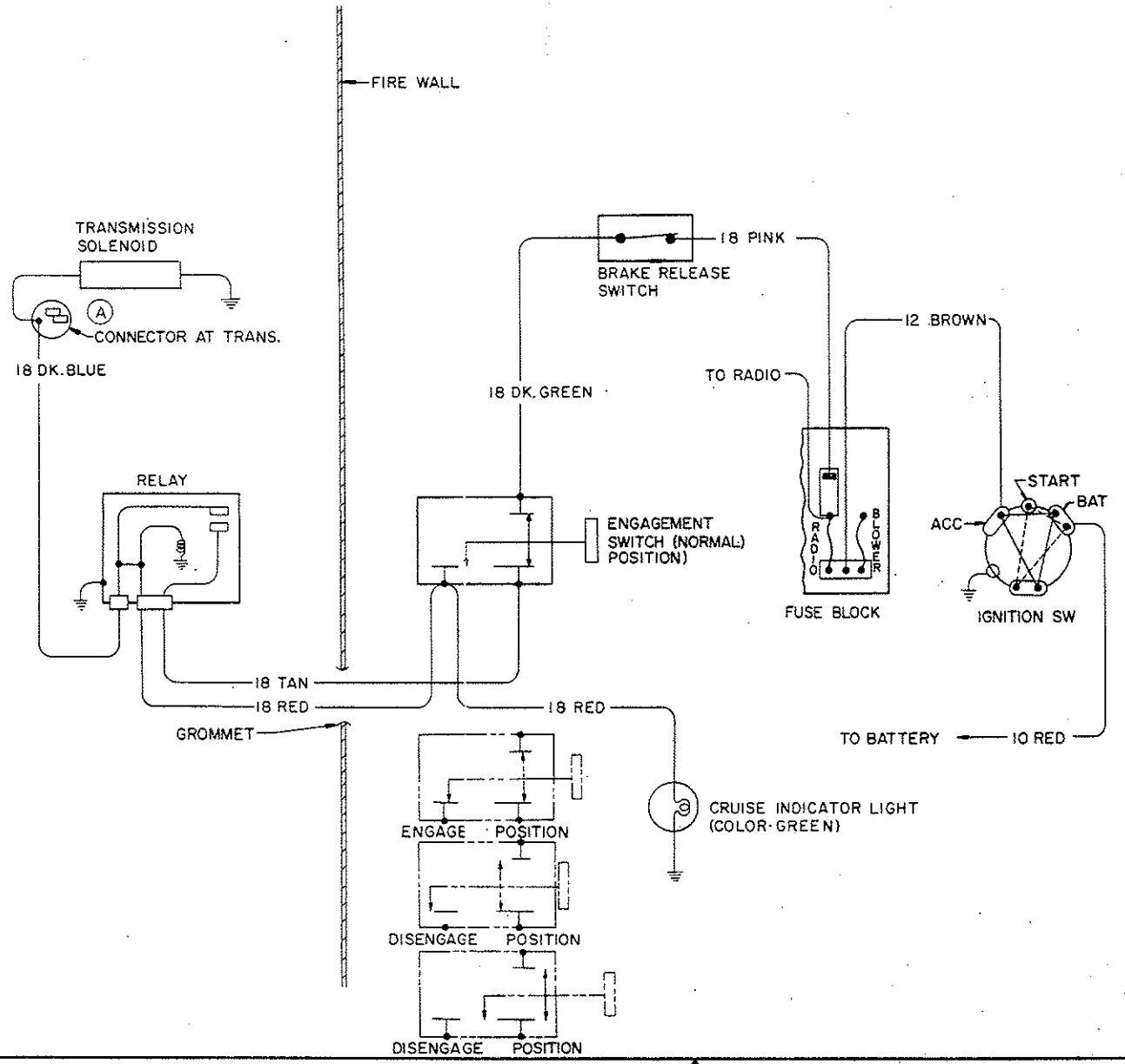

1380664

DATE	SYM.	REVISION RECORD	AUTH.	DR.	CK.
3-23-66	A	CONN. AT TRANS.			
		REVISED		BC	JK

1380664

DO NOT SCALE — REPORT ERRORS
TOLERANCES UNLESS OTHERWISE SPECIFIED
± —— ALLOWED ON TWO PLACE DECIMALS
± .010 ALLOWED ON THREE PLACE DECIMALS
COMMERCIAL TOLERANCES APPLY TO STANDARD PARTS - ROLLED SECTIONS - SHEET METAL GAGES - DRILLED AND PUNCHED HOLES.
BURR ALL DRILLED HOLES. COUNTERSINK ALL TAPPED HOLES .030 X 90°.

DWG. DATE 1-19-66	SCALE ——	DR. P. JOHNSON
FIRE USED 1967-33-34 42-43-44-46		CK. Jack O Kilgore
REFERENCE		APPR.
		APPR.
		APPR.

HYDRAULICALLY OPERATED SPEED CONTROL

NAME
WIRING CIRCUIT DIAGRAM

PART NO. 1380664 | INDEX 12-14.2

BUICK MOTOR DIVISION
GENERAL MOTORS CORPORATION
FLINT, MICH., U. S. A.

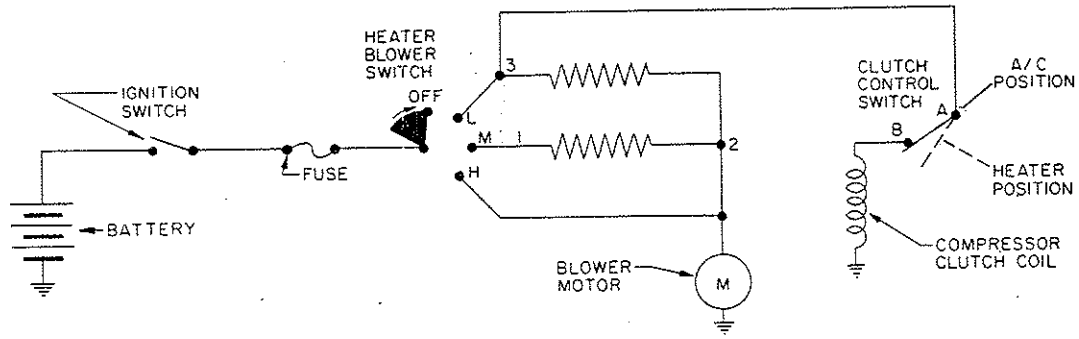

CIRCUIT SCHEMATIC

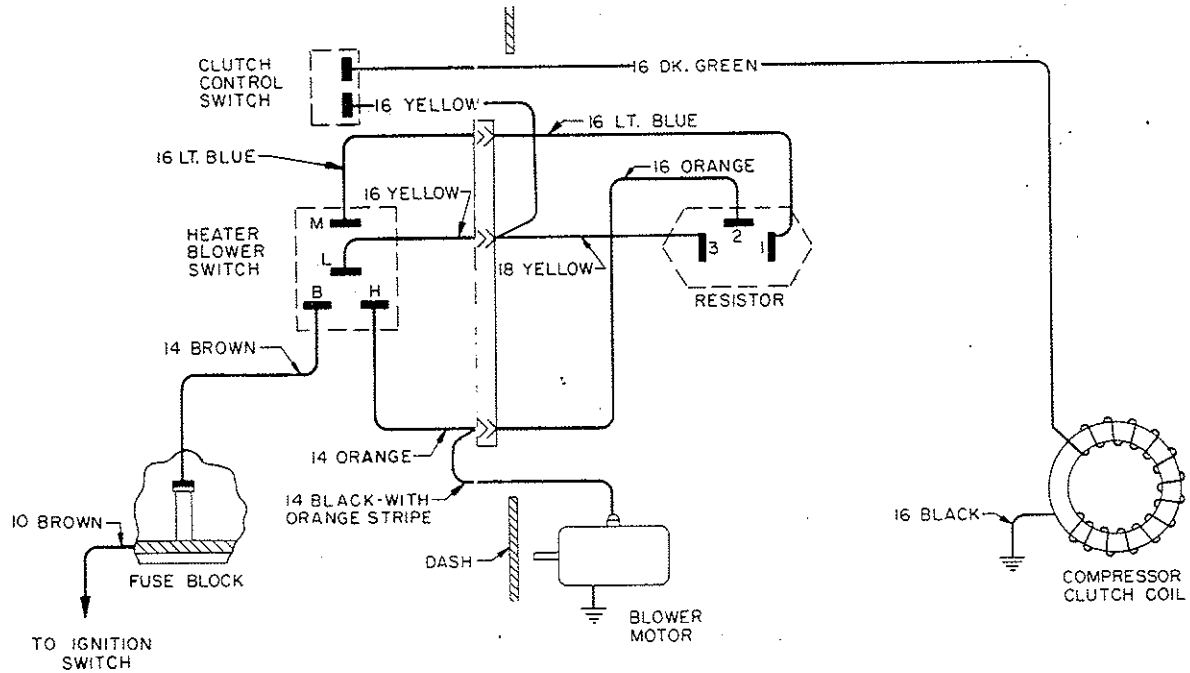

WIRING SCHEMATIC

+1372186

1378757

DATE	SYM.	REVISION RECORD	AUTH.	DR.	CK.
12-10-65	A	"X"-REMOVED		D.C.	JK

1378757

DO NOT SCALE — REPORT ERRORS

TOLERANCES UNLESS OTHERWISE SPECIFIED
± ALLOWED ON TWO PLACE DECIMALS
± .010 ALLOWED ON THREE PLACE DECIMALS

COMMERCIAL TOLERANCES APPLY TO STANDARD PARTS - ROLLED SECTIONS - SHEET METAL GAGES - DRILLED AND PUNCHED HOLES.

BURR ALL DRILLED HOLES. COUNTERSINK ALL TAPPED HOLES .030 X 90°.

DWG. DATE 8-26-65	SCALE	DR. D.COUSINEAU
FIRST USED 1967-33-34 42-43-44-46		CK. Jack A. Kinzer
REFERENCE		APPR.
		APPR.
		APPR.
MATERIAL SPEC.		

NAME
WIRING CIRCUIT DIAGRAM
HEATER AND AIR COND.

PART NO.	INDEX
1378757	12-15.1