89260–062

6' PROTECTOR XSTREAM LABORATORY HOOD

NOMINAL WIDTH	TOTAL EXHAUST CFM & STATIC PRESSURE	100 FPM	S.P.	80 FPM	S.P.	60 FPM	S.P.
6 FEET	@ 18" SASH OPENING (62.5% OPEN)	720	0.16"	575	0.10"	430	0.06"
6 FEET	@ 28" SASH OPENING (100% OPEN)	1150	0.41"	920	0.26"	690	0.15"

NOTE: SASH STOP INCLUDED AT 18" POSITION.

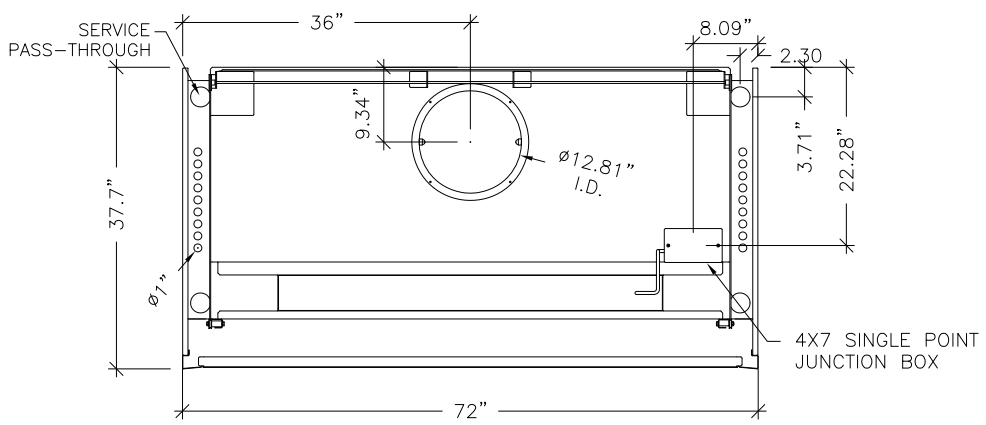

TOP VIEW

SCALE: 1/2" = 1'–0"

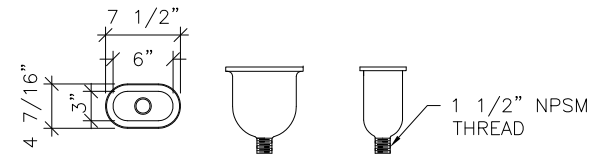

MATERIAL: POLYPROPYLENE
COLOR: BLACK
SEPARATE–REQUIRES INSTALLATION

CUP SINK

SCALE: NTS

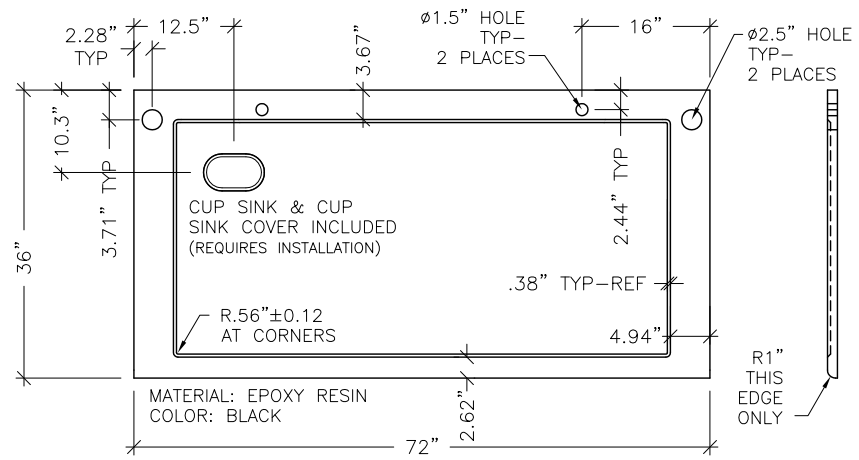

89260–078
WORKSURFACE

SCALE: 1/2" = 1'–0"

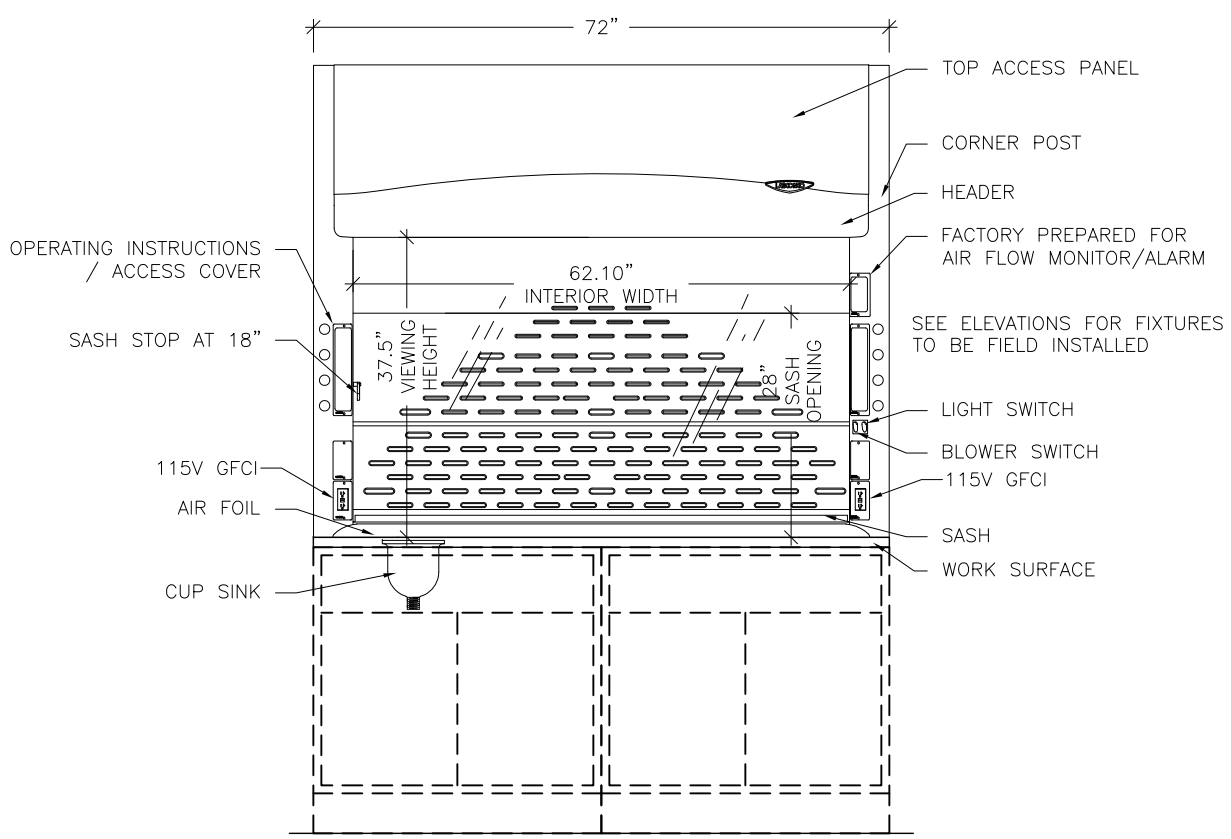

FRONT VIEW

SCALE: 1/2" = 1'–0"

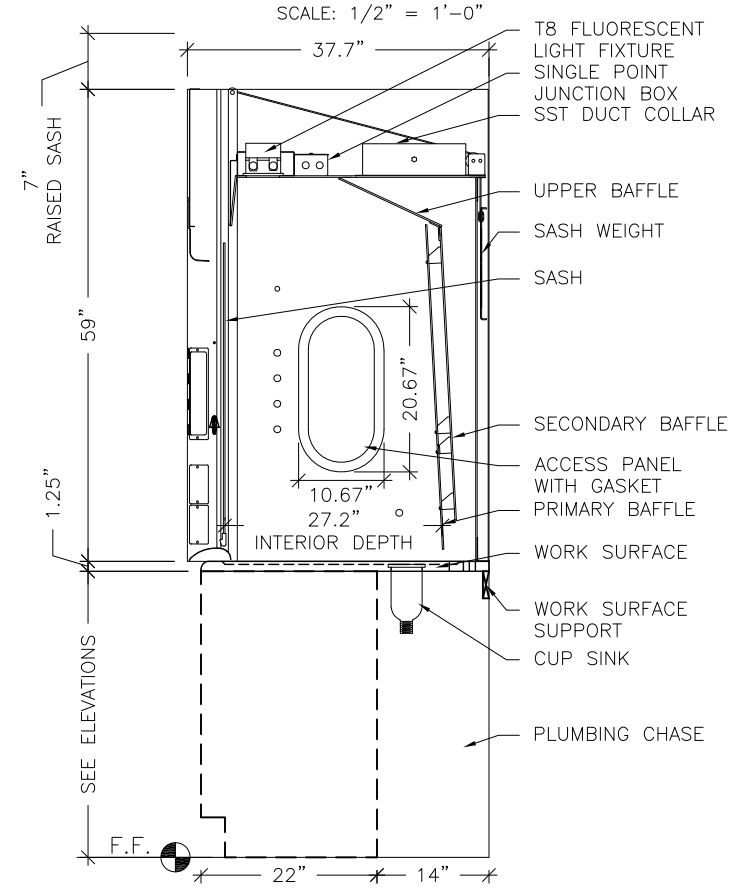

SIDE VIEW

SCALE: 1/2" = 1'–0"

GENERAL DESCRIPTIONS

EXTERIOR SUPERSTRUCTURE
DOUBLE WALL CONSTRUCTION
18 GAUGE COLD ROLLED STEEL
COLOR: GLACIER WHITE

INTERIOR SUPERSTRUCTURE
GALVANIZED STEEL (STANDARD)

LEFT / RIGHT FACIA
POWDER COATED STEEL
COLOR: GLACIER WHITE

LINER MATERIAL
MOLDED COMPOSITE SHEET

SIDE PANELS
BOTH SIDES – REMOVABLE
COLOR: GLACIER WHITE

ELECTRICAL FIXTURES
FLUORESCENT LIGHT AND TUBES W/ SWITCH
(2) 115V / 60HZ / 20A GFCI DUPLEXES
ADDITIONAL ELECTRICAL FIXTURES ORDERED SEPARATELY TO BE INSTALLED AND WIRED BY OTHER

WIRING
FUME HOOD WIRED AT FACTORY
ELECTRICAL SERVICE CONNECTION MADE INSIDE 4X7 JUNCTION BOX
100–115 V, 50/60 HZ
OVERLOAD RELAY THERMAL UNIT (P–HEATER) NOT PROVIDED WITH HOOD

SASH
VERTICAL TRAVEL
TEMPERED SAFETY GLASS
COUNTER WEIGHTED AND BALANCED
PULLEY SYSTEM
SASH STOP @ 18"

BAFFLES
MOLDED COMPOSITE SHEET

INTERIOR ACCESS PANELS
RIGHT AND LEFT SIDES – GASKET PROVIDED

CORNER POST WITH ACCESS COVERS
RIGHT AND LEFT SIDES
18 GAUGE COLD ROLLED STEEL

AIR FOIL
COLD ROLLED STEEL
POWDER COAT FINISH

EXHAUST CONNECTION
POWDER–COATED STAINLESS STEEL 12.81" ID

WORKSURFACE
ORDERED SEPARATELY

CUPSINK
INCLUDED WITH WORKSURFACE

CABINETS
ORDERED SEPARATELY – SEE ELEVATION(S)

REMOTE BLOWER
ORDERED SEPARATELY

ALARM / MONITOR
ORDERED SEPARATELY AS REQUIRED

PLUMBING
SERVICE FIXTURE KITS ORDERED SEPARATELY AS REQUIRED TO BE INSTALLED AND PLUMBED BY OTHER