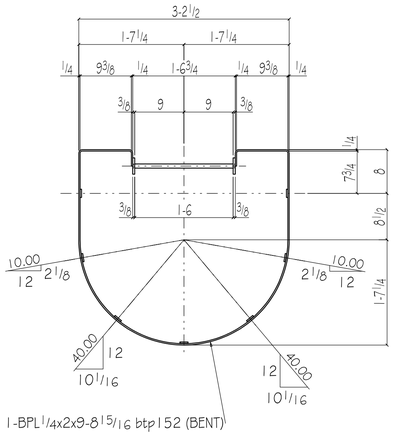

Section B-B
L1

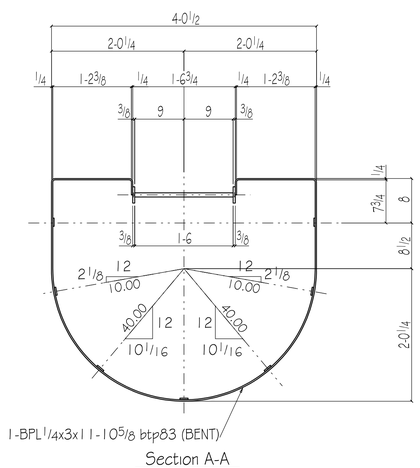

Section A-A
L1

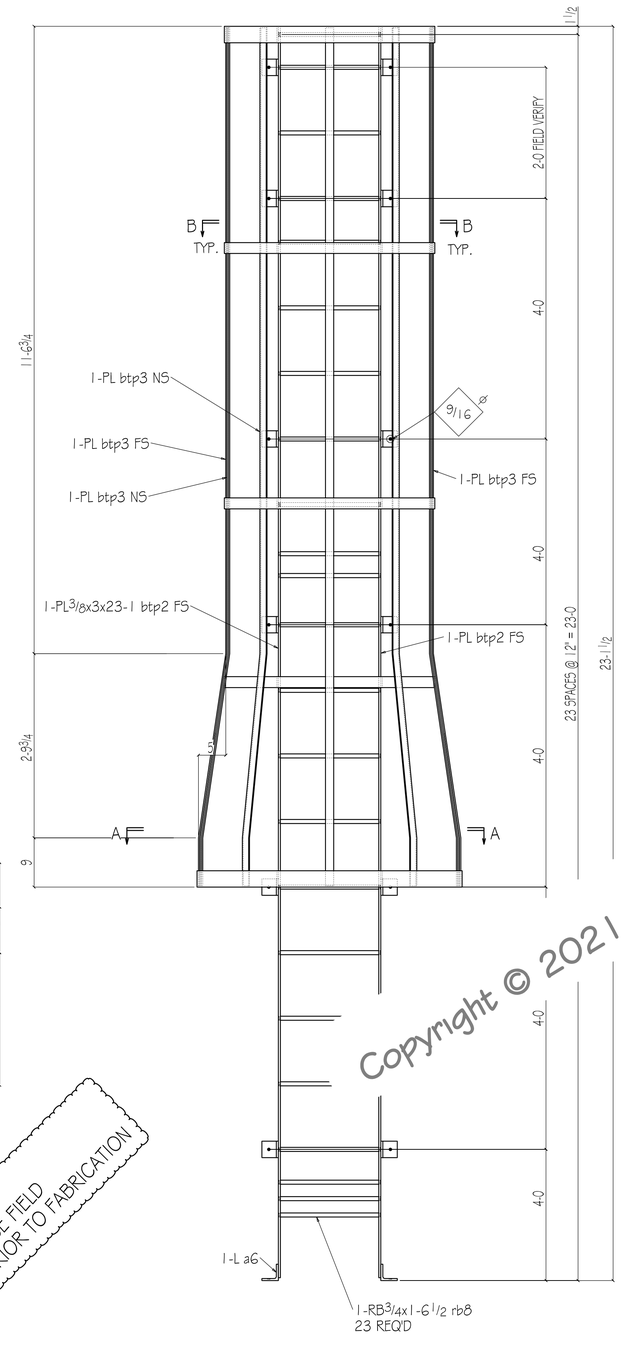

ONE LADDER L1

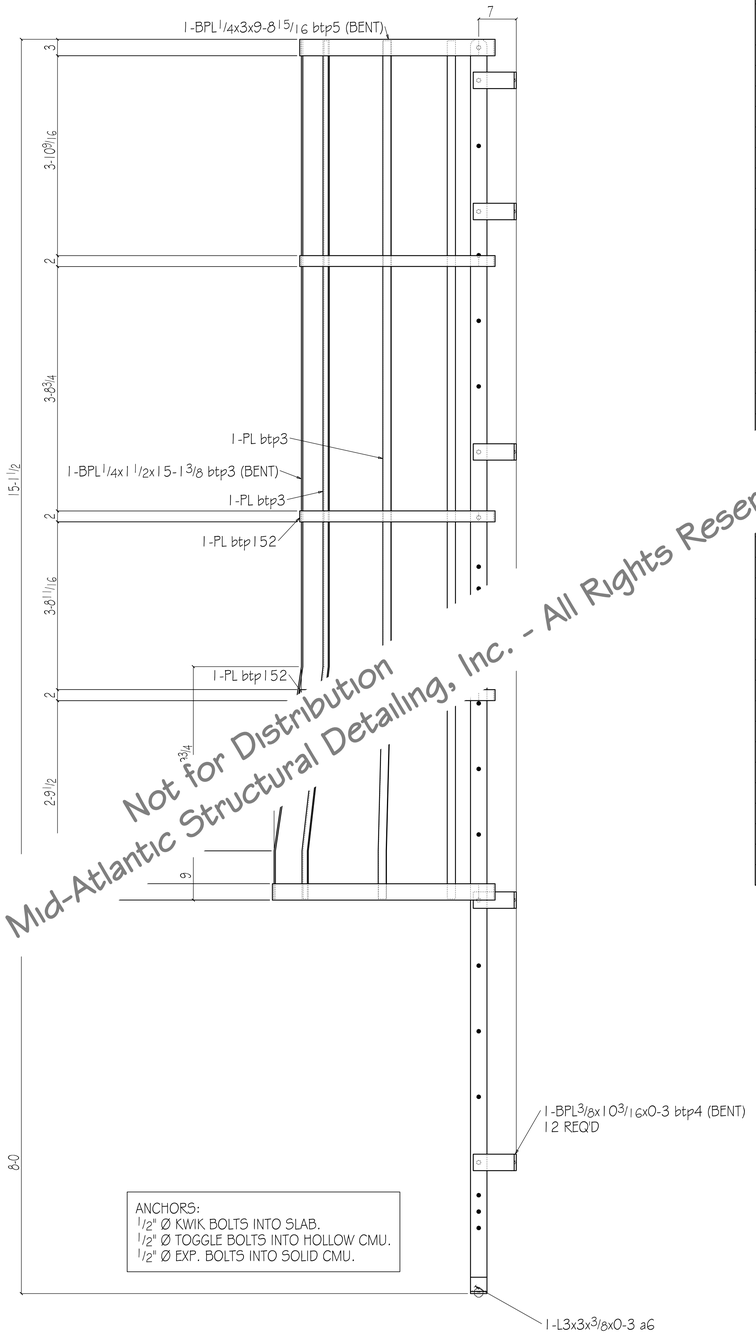

SHOP NOTE:
LADDER MUST BE FIELD
MEASURED PRIOR TO FABRICATION

BILL OF MATERIAL

QTY. Total	Piece Mark	Material Description	Length Feet	Length Inches	Steel Grade	Remarks
ONE	L1	LADDER				
2	a6	L3x3x3/8	0	3	A36	
12	btp4	BPL 3/8x10 3/16	0	3	A36	BENT
2	btp2	PL 3/8x3	23	1	A36	
1	btp83	BPL 1/4x3	11	10 5/8	A36	BENT
1	btp5	BPL 1/4x3	9	8 15/16	A36	BENT
3	btp152	BPL 1/4x2	9	8 15/16	A36	BENT
7	btp3	BPL 1/4x1 1/2	15	1 3/8	A36	BENT
23	rb8	RB 3/4	1	6 1/2	A36	

Copyright © 2021 Mid-Atlantic Structural Detailing, Inc. - All Rights Reserved.
Not for Distribution