# TABLE OF CONTENTS


Pump Product Description and Safety Information ..... **3-4**

## Setup

Pump Setup ..... **4-5**

General System Setup ..... **5-6**

Pump Electrical System Requirements ..... **7**

Pump Setup ..... **8**

- Priming the Pump ..... **8**

Filter Setup ..... **9**

## Maintenance

Filter Maintenance ..... **10-12**

- Filter Disassembly ..... **10**
- Cartridge Cleaning ..... **10**
- Filter Assembly ..... **11**
- Filter Winterizing ..... **12**
- Startup for Winterized Filter ..... **12**

Pump Maintenance ..... **12-14**

- Cleaning the Basket ..... **12**
- Draining the Pump ..... **13**
- Pump Storage/Winterizing ..... **13**
- Startup for Winterized Pump ..... **14**

General Pool Circulation System Inspection ..... **14**

Pool / Spa Chemistry Maintenance ..... **15**

## Troubleshooting

- General Guide ..... **16-17**
- Pump Troubleshooting Guide ..... **17**

Detailed Parts List ..... **18-19**

Warranty Information ..... **20**

# PRODUCT DESCRIPTION (PUMP)

These self priming pool pumps are for high efficiency, and easy maintenance, with an oversized strainer basket. It is constructed of durable thermoplastic for years of trouble free service. These swimming pool pumps are designed for use with permanently installed swimming pools and spas only. Do not use with storable pools.

## UNPACKING

After unpacking the unit, carefully inspect for any damage that may have occurred during transit. Check for loose, missing or damaged parts.

## SAFETY GUIDELINES

This manual contains information that is very important to know and understand. This information is provided for **SAFETY** and to **PREVENT EQUIPMENT PROBLEMS**.

The Operating Instructions and Parts Manual are included with each pump shipped from our factory. This manual contains important sections relative to user safety, use, maintenance, warranty, etc. Extra copies can be downloaded from Intermatic.com.

Do not use pump for any purpose other than pool/spa application. Components have not been designed for other applications. Severe pump failure, may result. Any unapproved use will void warranty.

**WARNING:** To reduce the risk of injury, do not permit children to use this product unless they are closely supervised at all times.

**WARNING:** Risk of electrical shock. Connect only to a branch circuit protected by a ground-fault circuit-interrupter (GFCI). Contact a qualified electrician if you cannot verify that the receptacle is protected by a GFCI. Such a GFCI should be provided by the installer and should be tested on a routine basis.

**CAUTION:** This pump is for use with permanently installed pools and may also be used with hot tubs and spas if so marked. Do not use with storable pools. A permanently installed pool is constructed in or on the ground or in a building such that it cannot be readily disassembled for storage. A storable pool is constructed so that it is capable of being readily disassembled for storage and reassembled to its original integrity. Do not install within an outer enclosure or beneath the skirt of a hot tub or spa.

**WARNING:** Fire and burn hazard. Motors run at high temperatures. Do not allow leaves, debris, or foreign matter to collect around the pump motor. Keep ventilation holes open. Allow the motor to cool before handling. Keep flammable liquids away.

**NOTICE:** PLEASE SAVE THESE INSTRUCTIONS.

## ALWAYS FOLLOW BASIC SAFETY PRECAUTIONS WITH THIS EQUIPMENT, INCLUDING:

- Provide sufficient ventilation to maintain air temperature below the maximum ambient temperature rating. Pump house must allow adequate ventilation to assure the ambient temperature remains below the motor rating when the pump is operating.
- Locate the pump on a non-combustible surface. The surface should be hard, level, dry, well ventilated, and out of direct sunlight. The surrounding area should provide protection from the elements and allow sufficient space for maintenance and service. Ensure the drainage will flow away from the pump. To reduce vibration and pipe stress, use anchor bolts to secure pump base to surface. Support the suction and discharge piping.
- Design the piping system to allow the pump suction inlet height to be as close to water level as possible. Mount the pump below water level for easy priming. If the pump must be located above the filled water level, keep the vertical distance to a minimum. Use short, direct piping to the suction as this will minimize friction loss.

**WARNING:** Fire and burn hazard. Motors run at high temperatures. Do not allow leaves, debris, or foreign matter to collect around the pump motor. Keep ventilation holes open. Allow the motor to cool before handling. Keep flammable liquids away.

- If the thermal overload protection in the motor trips or if the GFCI trips, determine the reason and correct the problem before restarting pump.
- Install using the flexible pipe provided.

**Note:** Use a supplier recommended primer to ensure glued joints are secure. Many local codes require primer with a purple tracer to verify primer use.

Consider climatic conditions when applying adhesives. Atmospheric conditions with high humidity will make the adhesive action of certain glues less effective. Follow the manufacturer's instructions.

## POOL SAFETY GUIDELINES

**RESPONSIBLE ADULT SUPERVISION**

Constant and responsible adult supervision is mandatory in the pool or spa environment. Always supervise children around pools and spas. Never allow a child to play in a way that could permit the child's hair to come near the drain cover.

**DRAINS, SUCTION FITTINGS, AND JETS**

Keep hair and clothing away from the suction fitting drain cover. Wear a bathing cap or pin hair up if you have long hair. Current grates and covers help prevent body or hair entrapment. Make sure that drain covers meet the ANSI/ASME A112.19.8 standard. Safety doors should be installed in all pool cleaner wall suction lines. Pools or spas with drain covers that are broken, missing, or not adequately secured should not be used until the proper replacement has been installed.

**ELECTRICAL HAZARDS**

A licensed electrician should inspect your equipment to make sure everything is properly grounded, bonded, and protected by proper GFCI circuits according to Article 680 of the National Electric Code.

**INDOOR INSTALLATIONS**

Pools and spas located indoors must comply with ANSI/ASHRAE (American Society of Heating, Refrigeration and Air-Conditioning Engineers) standard 62-2001 to ensure adequate ventilation and safe use.

**WARNING SIGNS**

Protect your family and guests. Make sure that all warning signs provided by the manufacturer, builder, or installer are displayed according to the manufacturer's specifications.

## PUMP SETUP

**WARNING:** Fire and burn hazard. Motors run at high temperatures. Do not allow leaves, debris, or foreign matter to collect around the pump motor. Keep ventilation holes open. Allow the motor to cool before handling. Keep flammable liquids away.

**TOOLS REQUIRED**




## INSTALLATION INSTRUCTIONS

The pump mount must be located away from corrosive or flammable chemicals. Do not connect the pump to a municipal water system. The pump is only designed for pool or spa installation. The pump must be installed with a minimum of 2 main drains equipped with certified anti-entrapment covers that comply with ASME/ANSI A112.19.8B standard (refer to Draining the Pump Section). All air must be removed from piping system before operating or testing equipment.

## THREADED CONNECTIONS

Use only new or clean PVC pipe fittings. Wrap male pipe threads with one to two layers of Plumber's Seal tape. Cover entire threaded portion. Do not over tighten. If leaks occur, remove pipe, clean off old tape, rewrap with one to two additional layers of tape and remake the connection.

## PUMP PLUMBING GUIDELINES

Suction pipe should be as large as or larger than discharge pipe. Avoid using a suction pipe smaller than pump connection.

Larger diameter pipes reduce noise and improve performance.

1. Keep the piping as straight and short as possible, and of suitable size.
2. Avoid connecting an elbow directly into the pump inlet. A length of straight pipe will allow proper entry of the water to the pump.
3. Slope horizontal runs upward to the pump to prevent trapping air.
4. Use independent piping supports to reduce strain on the pump.
5. Keep as much of the suction line as possible below the water level to reduce priming time.
6. Install valves and unions in the pump suction and return lines to facilitate servicing. Valves are also essential for pump maintenance if the system is installed below pool water level.
7. Keep all valves fully open during operation. Partially closed valves waste energy!
8. Fittings restrict flow; for best efficiency use fewest possible fittings. Avoid fittings which could cause an air trap. Pool fittings must conform to International Association of Plumbing and Mechanical Officials (IAPMO) standards. Use only non-entrapping suction fitting or double suction.

# GENERAL SYSTEM SETUP

1. Check Contents

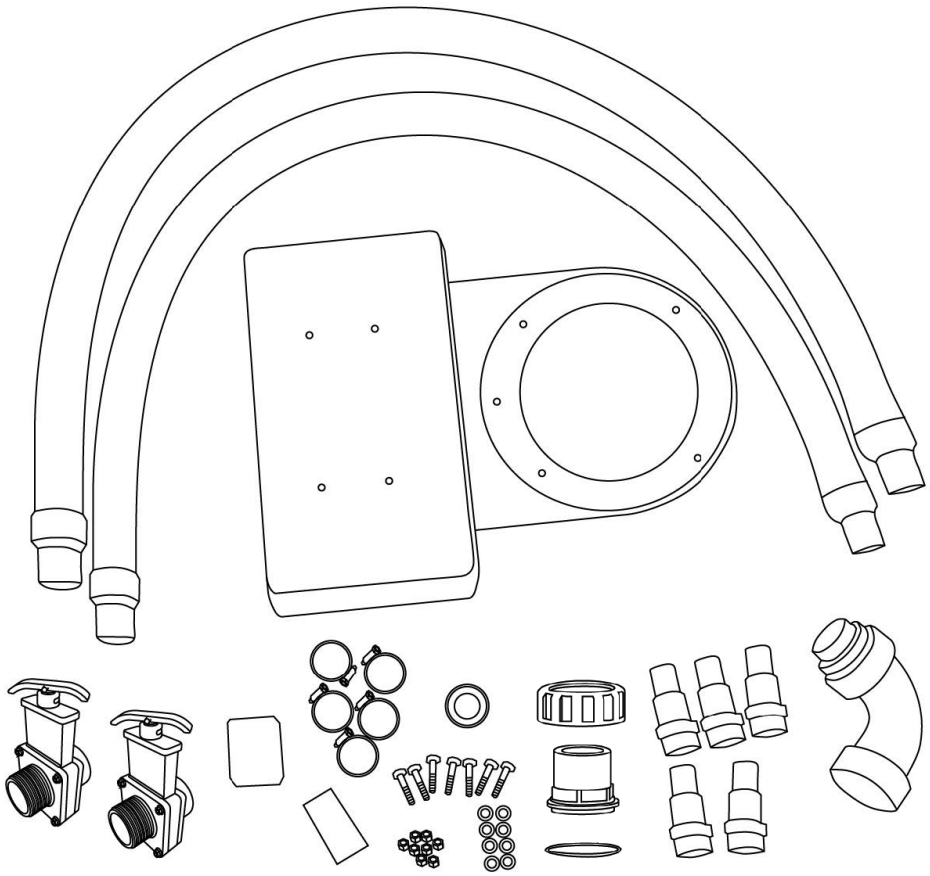

## CARTRIDGE FILTER SYSTEM INCLUDES THE FOLLOWING:

- ✔ Filter/Pump Base
- ✔ Bolts, Nuts & Washers To Secure Pump & Filter Tank To Base
- ✔ Pump-To-Filter Elbow Connection
- ✔ Filter Hoses
- ✔ Hose Clamps
- ✔ Hose Fittings
- ✔ Teflon Tape
- ✔ Pressure Gauge
- ✔ Union Adapter For Pump
- ✔ Shut-Off Valves

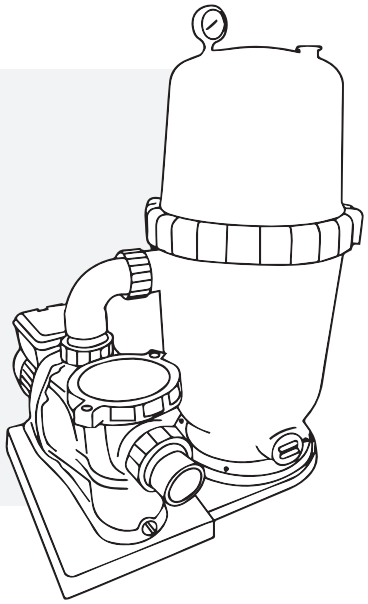

**2.** Use the filter box to help support the filter system during the installation process.

**3.** Set pump on top of filter/pump base and align holes.

**4.** Place the bolts through the holes of the pump and filter/pump base and secure with washers and nuts. Placing the pump on its side will help access nuts to tighten pump thoroughly to filter/pump base.

**5.** Set filter tank on top of filter/pump base and align holes.

**6.** Place the bolts through the holes of the filter tank and filter/pump base and secure with washers and nuts.

**7.** Install pump-to-filter elbow connection to the top of the pump and the side of the filter tank (inlet) and secure by tightening union nuts on elbow connection. Make sure the O-ring and seal are in place on both ends of elbow connection and screw on hand-tight.

**8.** Remove the supplied bag with union adapter and O-ring from pump strainer basket.

**9.** Install union adapter on the front of the pump (strainer housing). Make sure O-ring is in place on union adapter connection and screw on hand-tight.

**10.** Apply Teflon tape to the threads of the shut off valves and screw (hand-tight) the first shut-off valve into the reducer fitting on the bottom of filter tank (outlet) and screw (hand-tight) the second shut-off valve into the union adapter on the front of the pump.

**11.** Apply Teflon tape to the threads of the hose fittings and screw (hand-tight) into the shut-off valve on the filter tank and pump, then using a wrench, tighten one more full turn if necessary.

**12.** Apply Teflon tape to the threads of the pressure gauge and carefully screw the gauge into the threaded hole at the top of the filter tank.

**13.** Attach the first filter hose to the hose fitting on the filter tank and secure with a hose clamp. Attach the second filter hose to the hose fitting on the pump and secure with a hose clamp.

**14.** The filter hose connected to the pump (inlet) must get attached to the hose fitting at the bottom of the thru-wall skimmer on the pool.

**15.** The filter hose connected to the filter tank (outlet) must get attached to the hose fitting at the return jet on the pool.

# PUMP ELECTRICAL SYSTEM REQUIREMENTS

## GROUNDING/BONDING

Install, ground, bond and wire motor according to local or National Electrical Code requirements. Permanently ground motor. Use green ground terminal provided under motor canopy or access plate; use size and type wire required by code. Connect motor ground terminal to electrical service ground.

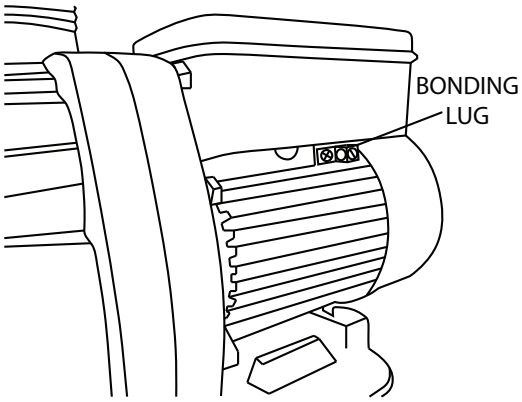


**Figure 7** - Bonding Lug Location

## WIRING

Pump must be permanently connected to circuit. Figure 10 gives correct wire and circuit breaker sizes for the pump alone. It is recommended to use a dedicated breaker. (If unsure how to do this or if this is confusing, consult a licensed electrician.) Use the load circuit breaker as the master on-off switch.

Install a Ground Fault Circuit Interrupter (GFCI) in circuit; it will sense a short-circuit to ground and disconnect power before it becomes dangerous to pool users. For size of GFCI required and test procedures, see GFCI manufacturer's instruction.

In case of power outage, check GFCI for tripping (which will prevent normal pump operation). Reset if necessary.

**NOTE:** If you do not use conduit when wiring motor, be sure to seal wire opening on end of motor to prevent dirt, bugs, etc. from entering.

| Motor HP | Branch Fuse Rating Amps* | Max Load Amps | Voltage/Hz/Phase | Service to Motor - Distance in Ft (m) | | |
|---|---|---|---|---|---|---|
| | | | | 0-100'(0-30) | 101-200'(30-60) | 201-300'(60-90) |
| | | | | AWG Wire Size ($mm^2$) | | |
| 1 | 20 | 7.5 | 115/60/1 | 12(3) | 10(5.5) | 8(8.4) |
| 1-1/2 - 2 | | 14 | | | 8(8.4) | 6(14) |

* Time delay fuses are recommended instead of standard fuses in any motor circuit
** Chart is for reference only. Refer to National Electic Code for details
*** Copper conductor only

**Figure 10** - Wire Gauge Matrix

**WARNING:** Shock hazard and electrocution hazard. Extension cords are NOT recommended, due to risk of mixing water with electricity.

# PUMP SETUP

**DANGER:** Risk of fire and burns. Motors run at high temperatures. To reduce the risk of fire, do not allow leaves, debris, or foreign matter to collect around the pump motor. To avoid burns when handling the motor, let it cool for 20 minutes before trying to work on it. An automatic internal cutoff switch protects the motor from heat damage during operation.

**DANGER:** Hazardous Suction. Can trap hair or body, causing severe injury or death. Do not block suction. Keep small children under close adult supervision at all times.

**NOTE:** Do NOT run the pump dry! It will void your warranty and may damage seals, causing leakage and flooding. Fill the pump with water before starting the motor.

## BEFORE REMOVING THE TRAP COVER

**1. TURN OFF THE PUMP**

**2. CLOSE GATE VALVES** in suction and discharge pipes.

If the pump is being pressure tested, be sure pressure has been released before removing the trap cover.

## PRIMING PUMP

Release all pressure from the filter, pump, and piping system. In a flooded suction system (water source higher than pump), pump will prime automatically when suction and discharge valves are opened. If the pump is located above the normal pool water level, remove ring and cover assembly and slowly fill the basket and pump with water. Clean and inspect the O-ring and reinstall on the trap. Replace the ring and cover assembly and rotate clockwise to tighten the cover.

The clamp ring must engage with the pump body. Push down and rotate until the internal stops are felt. Ensure the lid is securely clamped. Failure to tighten clamp ring as indicated will reduce product strength, resulting in failure of components, and bodily injury.

**NOTE:** Pump prime time will depend on vertical distance and length of suction line. If the pump does not prime, make sure that all valves are open and the suction pipe is submerged. Verify there are no leaks in suction lines. See Troubleshooting Guide for further assistance.

# FILTER SETUP

## Description for Cartridge Filter

This pool filter is designed to remove debris and particulates from permanently installed swimming pools. It is equipped with a removable cartridge that can be easily cleaned and replaced as it becomes clogged.

## Unpacking

Inspect this unit before it is used. Occasionally, products are damaged during shipment. If the filter or components are damaged, return the unit to the place of purchase for replacement.

**⚠ WARNING** *Failure to do so could result in serious injury or death.*

## Safety Guidelines

This manual contains information that is very important to know and understand. This information is provided for **SAFETY** and to **PREVENT EQUIPMENT PROBLEMS**. To help recognize this information, observe the following symbols.

**⚠ DANGER** *Danger indicates an imminently hazardous situation which, if not avoided, WILL result in death or serious injury.*

**⚠ WARNING** *Warning indicates a potentially hazardous situation which, if not avoided, COULD result in death or serious injury.*

**⚠ CAUTION** *Caution indicates a potentially hazardous situation which, if not avoided, MAY result in minor or moderate injury.*

**NOTICE** *Notice indicates important information, that if not followed, may cause damage to equipment.*

**NOTE** *Notice indicates information that requires special attention.*

## ASSEMBLY

This filter is pre-assembled at the factory. The only assembly required at installation is the installation of the pressure gauge.

### Pressure Gauge

Use thread sealant tape to seal the threads of the gauge. Install the pressure gauge in the 1/4 inch NPT port in the top of the filter (marked “Pressure Gauge”).

**NOTICE:** The pressure gauge is the primary indicator of filter performance. Maintain the pressure gauge in good working order. If the gauge is damaged, replace it immediately.

### Safety Latch

If necessary, the safety latch can be moved to the opposite side of the filter tank to provide easier access.

### Air Bleed Tube

When installing the cartridge in the filter base, ensure the tube is inserted in the center portion

# FILTER MAINTENANCE

## Filter Disassembly

**1.** Ensure pump is OFF. Turn off any automatic controls and lock out / tag out switches and / or circuit breakers to ensure the system cannot inadvertently turn on.

**⚠ WARNING** *Verify power is removed from the system. Disconnect, tag and lock out power source before attempting to install, service, relocate or perform any maintenance.*

**2.** Close filter isolation valves, if installed.

**3.** Open the air relief valve by turning it counter-clockwise two full turns. This will relieve pressure in the tank.

**4.** Remove the drain plug (or open the drain valve) and drain all water from the tank.

**5.** Press the safety latch toward the tank to release it from the locking ring.

**6.** While holding the safety latch in the release position, turn the locking ring counter-clockwise to remove it (approximately 1/2 turn). If the ring is difficult to turn, tap it gently with a rubber mallet to overcome the initial resistance.

## Cartridge Cleaning

The cleaning interval is based on pressure rise, not on operation time. Different water conditions will lead to different cleaning intervals.

**⚠ WARNING** *Do not operate filter at more than 50 psi (345 kPa). To prevent damage or injury.*

When to clean the filter: The filter cartridge should normally be removed and cleaned when the pressure gauge reads 10 psi to 12 psi (69 kPa - 83 kPa) above the start-up pressure noted below:

**Installation date:** _____ **Start-up pressure:** _____ **Cleaning pressure:** _____

**NOTE**: To limit the down time of the filter, keep a second cartridge on hand. This will allow time to properly clean the cartridge and also will allow for immediate replacement should one filter cartridge fail.

When using PHMB (polyhexamethylene biguanide) based sanitizers, such as Baquacil®, special care must be taken when cleaning the cartridge. Cartridges in systems using these sanitizers must be cleaned more frequently and thoroughly than chlorine systems. PHMB based sanitizers also require the use of special PHMB cleaners. Carefully follow the PHMB sanitizer/ cleaner manufacturer's instructions when cleaning the filter. Use of any other type of cleansers with PHMB sanitizers will permanently clog the filter and will void the filter warranty

**1.** Follow all steps in the "Filter Disassembly" section of this manual.

**2.** With drain plug removed, hose down the cartridge to try and remove as much of the debris as possible. Flush any foreign material from the inside of the tank before removing the filter cartridge.

**3.** Allow the tank to drain.

**4. If your filter is keyed, you may need to first turn the filter prior to lifting it out of the filter base, avoiding contact with the flow diverter.**

**5.** Using a garden hose with a nozzle, clean the cartridge thoroughly. Work from the top down, holding the nozzle at a 45° angle. Spray all the pleats, with emphasis between the pleats, until all dirt and debris is gone. Allow the cartridge to drain.

**6.** For cartridges used where perspiration, suntan lotions, and other oils are present, soak the element for at least one hour (overnight is recommended) in one of the following:

- **a.** Commercial filter cleaner (follow the manufacturer's directions)
- **b.** Solution of one cup (8 fl oz) trisodium phosphate (TSP) and five gallons water.
- **c.** Solution of one cup (8 fl oz) dishwasher detergent and five gallons of water.

**7.** Thoroughly rinse the cartridge again to remove cleaning solution and oils.

**8.** Inspect the cartridge for cleanliness and damage. If necessary, repeat the washing process. If the cartridge is damaged, replace it.

*Failure to remove all oils and cleaning solution before soaking cartridge in acid will permanently damage the filter cartridge.*

**9.** If the filter has a coating of algae, calcium carbonate (residue from calcium hypochlorite), iron or other minerals, soak the cartridge in a solution of one part muriatic acid to twenty parts water (6 fl oz per gallon of water) until all bubbling stops.

**⚠ WARNING** *Wear rubber gloves, protective clothing and safety goggles when using acid. Do not add water to acid, as splashing of full strength acid could result.*

**10.** Thoroughly rinse the cartridge to remove all acid solution.

*When this procedure no longer adequately cleans the cartridge, discard the cartridge and replace it with a new one.*

**11.** Carefully follow the steps in the "Filter Assembly" section of this manual.

# FILTER ASSEMBLY

**1.** Inspect and clean the tank, threads, and O-ring. Replace damaged parts as necessary

**2.** Install the drain plug in the drain port (or close to the drain valve).

**3.** Follow steps 1-13 below.

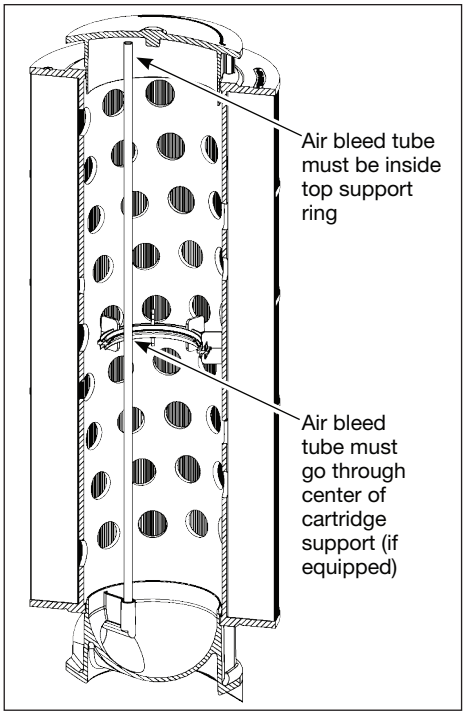


**Figure 5** - Air bleed tube alignment

## ⚠ WARNING

***Do not operate filter at more than 50 psi (345 kPa).***

**1.** Ensure pump is OFF. Turn off any automatic controls and lock out / tag out switches and / or circuit breakers to ensure the system cannot inadvertently turn on.

## ⚠ WARNING

***Verify power is removed from the system. Disconnect, tag and lock out power source before attempting to install, service, relocate or perform any maintenance.***

**2.** Install the filter cartridge in the base of the tank, being careful to avoid the flow diverter in the inlet.

Ensure the air bleed tube is correctly installed (Figure 5). Push down firmly to seal the cartridge.

**3.** Clean the O-ring seating area on the inside of the base (Figure 6). Lightly lubricate with silicone based grease.

## NOTICE

***Only use silicone based grease to lubricate the O-ring. Other lubricants may damage the O-ring and plastic filter components. Do not lubricate the threads on the tank base or the locking ring, as they may collect debris and hinder removal.***

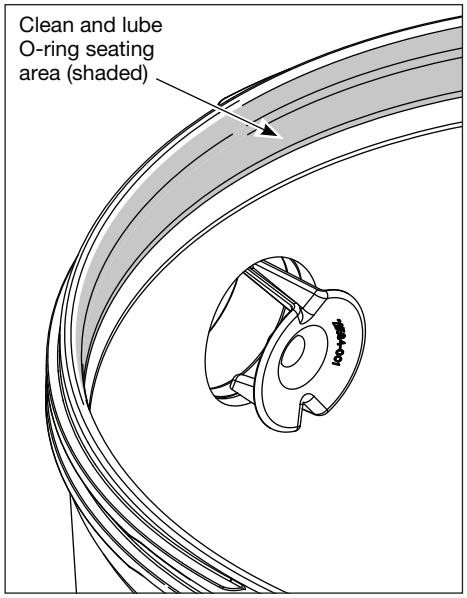


**Figure 6** - O-ring seating area

**4.** Inspect O-ring. Ensure the O-ring is clean and properly seated in the O-ring groove (Figure 7). The O-ring should not be twisted.

## NOTICE

***Do not remove the O-ring unless it is to be replaced.***

**5.** Open the air relief valve by turning it counter-clockwise two full turns.

**6.** Place the top assembly on the filter base, centering it on the cartridge and the base.

**7.** Turn the locking ring counterclockwise until the top assembly falls into place (1/4 turn or less.)

**8.** Holding the locking ring stationary, rotate the top to point the air relief valve in a safe direction (away from the pump and any other electrical components.)

**9.** Secure the locking ring by turning it clockwise until the safety latch clicks into place (approximately 1/2 turn).

The latch should fall between the two tabs on the ring (Figure 8). The ring may be slightly loose, but it will tighten when the pump turns on.

If the locking ring will not fully engage the latch, turn it counterclockwise to remove the top assembly and return to step 2, ensuring the cartridge is properly seated and the O-ring is lubricated and properly seated.

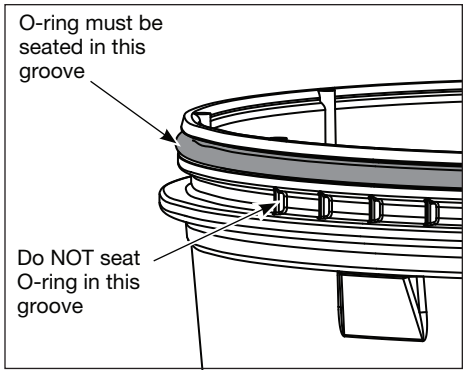


**Figure 7** - O-ring groove

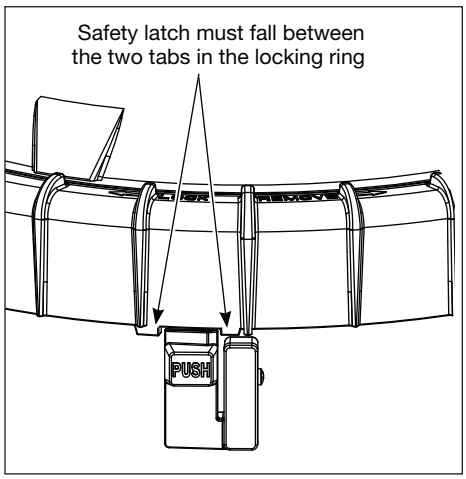


**Figure 8** - Safety latch: locked position

**10.** If installed, open the valves separating the filter from the rest of the system.

**11.** Stand clear of the filter tank. Following the pump manufacturer's instructions, start the pump to purge the air from the system.

**12.** Once a steady stream of water flows from the air relief valve, close the valve by pushing it down while turning it clockwise. It should fully tighten in approximately 2 turns.

## NOTICE

***Do not over-tighten the valve. If the valve fails to seal, turn the pump off, remove the top assembly and inspect the valve O-ring. Reseat or replace if necessary.***

**13.** Record the filter pressure gauge reading in the "Cartridge Cleaning" section of this owner's manual.

## Filter Winterizing

Protect the filter from freezing. If possible, take the system indoors for storage.

**1.** Ensure pump is OFF. Turn off any automatic controls and lock out / tag out switches and / or circuit breakers to ensure the system cannot inadvertently turn on.

Verify power is removed from the system. Disconnect, tag and lock out power source before attempting to install, service, relocate or perform any maintenance.

**2.** Clean the filter. Refer to the “Cartridge Cleaning” section of this owner’s manual.

**3.** Remove the filter cartridge and store in a warm, dry area. Protect the cartridge from sunlight.

**4.** Cover the filter with plastic or a tarp to prevent water from entering the assembly and freezing.

Failure to follow the above steps could cause the filter assembly to expand and crack. This will void the warranty.

## Startup For Winterized Filter

**1.** Remove any temporary weather protection placed around the system for shutdown.

**2.** Follow the Filter Re-Assembly Section for re-activation of the filter.

# PUMP MAINTENANCE

All of our pumps are shipped from the factory with DANGER and/or WARNING labels already on the pump. These labels contain a series of basic, yet extremely important safety messages for the user and bystander. Regardless of how well these labels are attached or how scratch resistant or wear-resistant they may be, it is possible that, in time, the wording may become illegible with normal use. Whenever you are repairing the pump, performing routine maintenance, or have the opportunity to inspect the pump, make sure the label is readable.

If the label is not legible, replace the label with an adhesive version that is available at no charge by calling Technical Support. The unit must be connected only to a supply circuit that is protected by a ground-fault circuit-interrupter (GFCI). Such a GFCI should be provided by the installer and should be tested on a routine basis. To test the GFCI, push the test button. The GFCI should interrupt power. Push the reset button. Power should be restored. If the GFCI fails to operate in this manner, the GFCI is defective. If the GFCI interrupts power to the pump without the test button being pushed, a ground current is flowing, indicating the possibility of an electric shock. Do not use this pump.

Disconnect the pump and have the problem corrected by a qualified service representative before using.

Use only parts supplied by the manufacturer. Similar looking parts may not have sufficient strength for safe operation.

The only routine maintenance needed is inspection/cleaning of the strainer basket. Debris or trash that collects in the basket will choke off water flow through the pump.

### BEFORE ATTEMPTING TO CLEAN THE BASKET

**A.** Stop the pump, disconnect power at its source, lock out power, place a tag on the dedicated GFCI circuit breaker indicating the power is to remain OFF, close valves in suction and discharge, and release pressure from the system.

**DANGER:** Hazardous suction can trap hair or body parts, causing severe injury or death. Do not block suction.

**B.** Remove the ring and cover assembly by turning counterclockwise. If necessary, tap handles gently with a rubber mallet.

**C.** Remove the basket and clean. Inspect holes in the basket for blockage. Clean the basket with water and replace in the basket housing. Do not hit the basket to clean. Verify the basket is oriented correctly in the housing.

**D.** Clean and inspect the lid O-ring. Reinstall ring and cover assembly.

**E.** Prime the pump (see priming instructions).

## DRAINING THE PUMP

**DANGER:** Hazardous suction can trap hair or body parts, causing severe injury or death. Do not block suction.

**1.** Pump down water level below all inlets to the pool. Risk of electric shock . Can shock, burn or kill. To avoid dangerous or fatal electrical shock hazard, turn OFF power to motor before draining pump.

**2.** Remove trap cover and use low pressure air to blow accumulated water from the piping system. Never use high pressure air to purge system.

**3.** Cap inlet piping after draining to keep water out of the pipes.

**4.** To prevent pump from freezing, remove trap cover and drain the tank body through the two drain plugs provided. Clean pump thoroughly; replace trap cover.

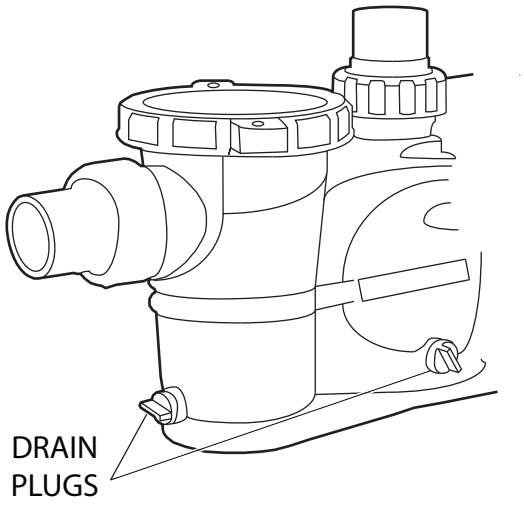


**Figure 11** - Pool Pump Drain Plugs

**NOTE:** Tighten trap cover by hand only (no wrenches)! If pump is not anchored, use caution to avoid breaking attached piping.

**5.** Be sure motor is kept dry and covered.

**DANGER:** To avoid dangerous or fatal electrical shock hazard, turn OFF power to the motor before draining the pump. Disconnect the power at its source, lock out the power, and place a tag on the dedicated GFCI circuit breaker indicating the power is to remain off.

## PUMP STORAGE/WINTERIZING

**NOTICE:** Allowing pump to freeze will damage pump and void warranty!

**NOTICE:** Do not use anti-freeze solutions (except propylene glycol) in your pool/spa system. Propylene glycol, or “RV antifreeze”, is non-toxic and will not damage plastic system components; other anti-freeze formulas are highly toxic and may damage plastic components in the system.

Drain all water from pump and piping when expecting freezing temperatures or when storing pump for a long time (see Draining The Pump).

Keep motor dry and covered during storage. To avoid condensation/corrosion problems, do not cover pump with plastic.

For outdoor/unprotected installations:

**1.** Enclose entire system in a weatherproof enclosure.

**2.** To avoid condensation/corrosion damage, allow ventilation; do not wrap system in plastic.

**3.** Use a 40% propylene glycol/60% water solution to protect pump to -50°F (-46°C).

## STARTUP FOR WINTERIZED PUMP

**1.** Remove any temporary weather protection placed around system for shutdown.

**2.** Follow the section for startup of a winterized filter.

**3.** Inspect all electrical wiring for damage or deterioration over the shutdown period. Have a qualified serviceman repair wiring as needed.

**4.** Inspect and tighten all watertight connections.

**5.** Open all valves in suction and return piping.

**6.** Remove any winterizing plugs in piping system.

**7.** Drain all antifreeze from system.

**8.** Close all drain valves and replace all drain plugs in piping system.

**9.** Prime pump according to instructions in Priming Pump.

## GENERAL POOL CIRCULATION INSPECTION

The pool circulation system should be frequently inspected for debris and signs of leaks.

Any time the system is opened, air must be bled from the filter using the air relief valve. Air trapped in the system can cause an explosion.

**1.** Ensure pump is OFF. Turn off any automatic controls and lock out / tag out switches and / or circuit breakers to ensure the system cannot inadvertently turn on.

Verify power is removed from the system. Disconnect, tag and lock out power source before attempting to install, service, relocate or perform any maintenance.

**2.** Close system isolation valves, if installed.

**3.** Remove debris from the pool skimmer basket.

**4.** Open the air relief valve to release any pressure in the system.

**5.** Check system for signs of leaks. If found, consult the owner's manual of the leaking equipment.

**6.** Remove pump trap cover and basket; remove debris. Refer to the pump owner's manual for more specific information.

**7.** Replace the pump basket and trap cover according to the pump owner's manual.

**8.** Open system isolation valves, if installed.

**9.** With the air relief valve open, stand clear of the filter and start the pump.

**10.** Once a steady stream of water flows from the air relief valve, close the valve.

Do not over tighten valve. If the valve fails to seal, turn the pump off, remove the top assembly and inspect the valve O-ring. Reseat or replace if necessary.

**11.** When the system has returned to normal operation, check the filter operating pressure. If the filter pressure is 10 psi to 12 psi (69 kPa - 83 kPa) above the start-up pressure, the filter needs to be cleaned. Refer to the "Cartridge Cleaning" section of this owner's manual).



**DANGER:** To avoid dangerous or fatal electrical shock hazard, turn OFF power to the motor before draining the pump. Disconnect power at its source, lock out the power, and place a tag on the dedicated GFCI circuit breaker indicating the power is to remain off.



**NOTE:** Allowing the pump to freeze will damage the pump and void warranty! Use only non-toxic antifreeze.
Do not use automotive antifreeze. It is highly toxic and may damage plastic components in the system.

# POOL / SPA CHEMISTRY MAINTENANCE

Maintaining water chemistry at the correct levels is critical for health of pool / spa users and will help prolong the life of pool / spa equipment. This chart contains the recommended levels for a typical pool / spa. If you have questions about maintaining your pool / spa and its chemistry, consult your local APSP / NSPI pool professional or reference the chart below.

**Table 1**

| INDUSTRY STANDARD | POOL / SPA | MINIMUM | IDEAL WATER CHEMISTRY | MAXIMUM |
|---|---|---|---|---|
| Free Chlorine, ppm | Pool | 1.0 | 2.0 - 4.0 | 5.0 |
| | Spa | 2.0 | 3.0 - 5.0 | 10.0 |
| Total Bromine, ppm | Pool / Spa | 2.0 | 4.0 - 6.0 | 10.0 |
| pH | Pool / Spa | 7.2 | 7.4 - 7.6 | 7.8 |
| Total Alkalinity, ppm | Pool / Spa | 60 | 80 - 100*<br>100 - 120** | 180 |
| Calcium Hardness, ppm as $CaCO_3$ | Pool | 150 | 200 - 400 | 1000 |
| | Spa | 100 | 150 - 250 | 800 |
| Cyanuric Acid, ppm | Pool / Spa | 0 | 30 - 50 | *** |

* For Calcium Hypochlorite, Lithium Hypochlorite, or Sodium Hypochlorite

** For Sodium Dichlor, Trichlor, Chlorite gas, BCDMH (Bromine Tablets).

*** Dictated by state or local codes. Typically 100 ppm.