StarLight™

IN GROUND POOL LIGHT

USER MANUAL AND INSTALLATION GUIDE

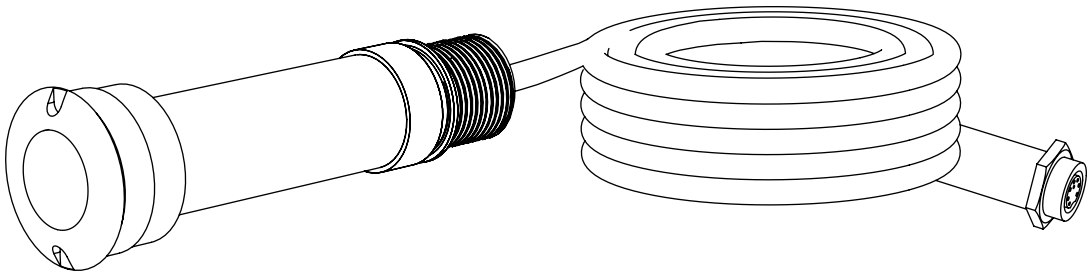

CARVIN® POOL EQUIPMENT | 4000 boul. Casavant West, Saint-Hyacinthe, Quebec, Canada, J2S 9E3
M10064D | EN © 2026 Groupe VIF Inc. All rights reserved.

CARVIN POOL EQUIPMENT

TABLE OF CONTENTS

INTRODUCTION	2
INSTRUCTIONS	3
LIGHT INSTALLATION	3
MODEL IFD FACE-FLANGE TYPE FOR LINER POOLS.	3
INSTALLATION INSTRUCTION	3
REMOTE CONTROL STARTER KIT	4
SPECIFICATIONS	4
INSTRUCTIONS	4
CONSUMER INFORMATION	5
REPLACEMENT PARTS AVAILABILITY	5
WARRANTY	5
TECHNICAL SUPPORT INFORMATION	5

INTRODUCTION

Thank you for purchasing the STARLIGHT™ in ground pool light by CARVIN®

We want to help you get the best results from your new product and operate it safely. This manual contains information on how to do that; please read it carefully before installing and using the pool. If a problem should arise, or if you have any questions about your product, consult an authorized CARVIN® retailer or distributor.

All the information in this manual is based on the latest product information available at the time of publication. The manufacturer reserves the right to make changes at any time without notice and without incurring any obligation. No part of this publication may be reproduced without written permission.

READ AND FOLLOW ALL INSTRUCTIONS

Review all instructions provided with the product prior to its installation, startup, operation, shutdown, maintenance or winterizing.

Failure to follow warnings and safety messages may result in property damage or personal injury. The user assumes the bodily or material risks arising from any improper use of this product.

IMPORTANT SAFETY INSTRUCTIONS

Your safety and the safety of others are very important.

This manual provides important safety messages. A safety message alerts you to potential hazards that could hurt you or others. Each safety message is identified by a black box marked, WARNING.

⚠ WARNING This manual contains important safety information which must be furnished to the end user. Failure to read and follow instructions could result in serious personal injury and/or major property damage.

⚠ WARNING Install and locate this light in accordance with the installation instructions.

⚠ WARNING This light is potentially hazardous if not properly installed.

⚠ WARNING This light must be installed in conformance with Article 680 of the National Electric Code and all local code requirements.

⚠ WARNING To reduce the risk of electric shock, a Class A ground fault circuit interrupter (GFCI) shall be installed in the branch circuit by a licensed electrician, and all devices in the system must be properly grounded. **DO NOT use extension cord sets.**

This pool lighting fixtures are designed to meet the National Electric Code - Article 680, and the Canadian Electrical Code requirements. The NEC requires that fixtures be installed so that the top of the fixture lens is at least 18" (45,7 cm) below normal water level. The junction box shall be located not less than 8" (20,3 cm) above the pool water level and not less than 4" (10,2 cm) above the pool deck or ground, whichever is higher. The junction box shall be located at a minimum of 4 feet (121,9 ml from the perimeter of the pool, unless separated from the pool by a fence, wall or other permanent barrier. Junction boxes mounted above grade in the walkway around a pool shall be afforded additional protection by locating them in such places as under a diving board, adjacent to fixed structures, etc. Check codes to assure compliance.

INSTRUCTIONS

LIGHT INSTALLATION

⚠ WARNING **Disconnect all power sources to the pool equipment before installing this light assembly.**

⚠ WARNING **For concrete pool installation: Securely glue a minimum of 10 inches of 1 ½''PVC pipe to the body return and ensure it is properly positioned before pouring the concrete. Use the pouring cap to prevent debris from going to the water return.**

MODEL IFD FACE-FLANGE TYPE FOR LINER POOLS. INSTALLATION INSTRUCTION

This fitting is suitable for maximum thicknesses of ½" (12,7 mm) for the wall and 0.030 inches (0,75 mm) for the liner, and can be mounted before shipping the pool or panel to the site.

At this point, the pool should be empty with no liner. Cut a 3⅜" (86 mm) diameter hole in the required position on the pool wall or panel, then secure the body (5) through the hole with the spacer lock nut (6) as in (fig B & C).

Place one of the gaskets (4) on the body, aligning the bolt holes and fix gasket in place with adhesive tape (fig A).

Install the liner and fill the pool with water according to the maker's instructions making sure to keep the water level beneath the water return fittings. Pierce 4 holes in the liner where the FOUR Philip screws will go. Use the screws to secure the other gasket and the face ring to the body face ring hole to cut out the liner. Place the light on the deck. Run the end of the cable down into the pool and into the niche opening. Push the cable into the conduit until it appears at your wiring junction box. Pull the excess cable through the conduit. Make the necessary connections as explained on page.

Finish the installation by screwing the light in place using the installation tool (7). Add a ¼ turn after you have felt resistance .

Figure A

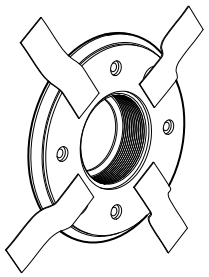

Figure B

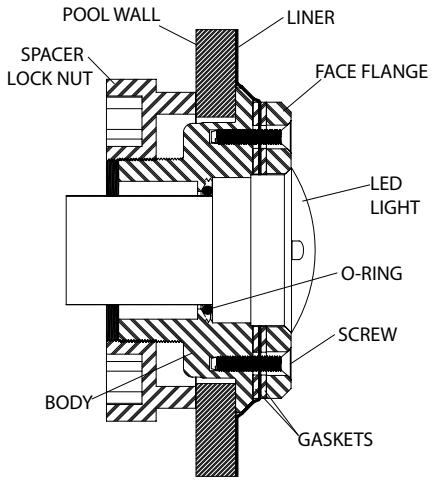

Figure C

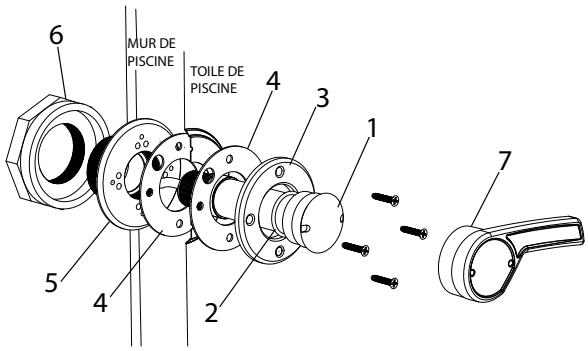

No	Description	Qty	Part Number
1	Light (50ft.cord)	1	941320120051
1	Light (100ft.cord)	1	941320120101
1	Light (150ft.cord)	1	941320120151
2	O-Ring	1	47-0218-03R
3	Face Flange	1	43-0619-02R
4	Gasket	2	13087002R
5	Body	1	88-3153-00R
6	Space Lock Nut	1	31041820R
7	Installation Tool	1	23498040

⚠ WARNING **The control box is not waterproof. Install and store in a dry and cool place. Do not install in zones subject to lightning, high magnetic fields and high pressures.**

REMOTE CONTROL STARTER KIT

STARLIGHT™ is a LED lighting system for inground pools, designed to be installed inside water return outlets. The starter kit includes a remote control, a six-outlet controller, an AC adapter and the installation tool. You can connect up to six STARLIGHT lights (individually sold separately) to the controller to work in a synchronized way.

SPECIFICATIONS

CONTROLLER	VOLTAGE (V)	FREQUENCE (HZ)	TENSION (A)	WATT(W)
INPUT	12 AC	60	5.0	60
OUTPUT	12 AC	60	4.6	55
LIGHT				
INPUT	12 AC	60	4.6	-
OUTPUT	-	-	-	10

INSTRUCTIONS

1. Install light(s) to pool wall (see installation instructions) and the controller in a cool dry place. Connect light(s) to the controller and the AC adapter as well. **Read the following before connecting to your power outlet.**
2. At first use, the remote must be paired with the controller. Within the first 10 seconds following connection to your power outlet, press M & C simultaneously on the remote control. Try the remote and repeat step 2 if necessary always disconnecting power between each try.
3. If you experience difficulties synchronizing the remote, follow this protocol Follow Step 1 and connect the AC adapter in your electrical outlet. Still plugged in, open the controller cover (8 screws) and press the button inside (fig. D) while pressing M & C on the remote at the same time. Try the remote and repeat step 2 if necessary. Make sure there is no short-circuit.

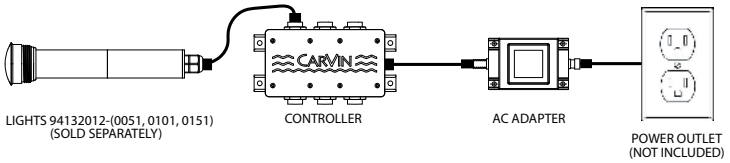

Figure D

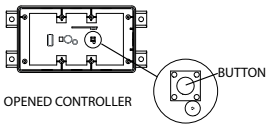

REMOTE CONTROL

ON / OFF

MODES: Changing between 5 different built-in modes.
M1: Waving changing colors R↑RG↓G↑B↓B↑GB↓GB↑RB↓RB↑RG↓RG↑RG↓RGB↑RGB↓
M2: Jumping changing colors R→G →B→GB→RB→RG→RGB
M3: Fading out
M4: Waving changing colors + Jumping changing colors (M1 & M2)
M5: Gradually changing colors

SPEED: After pushing M you can adjust the speed to which the colors will change. (8 levels).

COLORS: Static color modes
C1: White color
C2: Color ring mode. Select the desired light color by running your finger on the color ring.

BRIGHTNESS: After pushing C you can adjust the brightness level (8 levels).

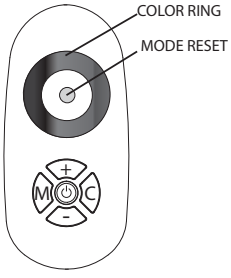

CONSUMER INFORMATION

Authorized CARVIN® retailer or distributor personnel are trained professionals. They should be able to answer any question you may have. If you encounter a problem that your retailer or distributor does not solve to your satisfaction, please discuss it with the retailer's or distributor's management. The Service Manager, General Manager, or Owner can help. Almost all problems are solved in this way.

If you are not satisfied with the decision made by the retailer's or distributor's management, contact the CARVIN® technical support.

When you write or call, please provide the following information:

- Product model, serial number and date code.
- Name of retailer or distributor who sold the Product to you.
- The original proof of purchase showing the date of purchase.
- Your name, address and telephone number.
- A detailed description of the problem.
- If sending an email, any relevant photos of the Product and its surroundings.

REPLACEMENT PARTS AVAILABILITY

Replacement parts are available through your CARVIN® retailer or distributor.

WARRANTY

A digital warranty is provided for your product.
https://carvinpool.com/link_waranty

TECHNICAL SUPPORT INFORMATION

After contacting your dealer or distributor, if you have any problems with your Product, contact CARVIN® Technical Support.

AMERICA

Web: carvinpool.com/support
Contact: https://carvinpool.com/contact/
Toll Free: 1 (866) 979-4501

CARVIN
POOL EQUIPMENT

GROUPE VIF INC.

4000, boulevard Casavant West, Saint-Hyacinthe
Quebec, Canada, J2S 9E3

www.carvinpool.com

CARVIN® is a registered trademark of Groupe VIF Inc.
In Canada and the United States of America.