INGROUND POOL PUMP

USER MANUAL

MAGNUM®

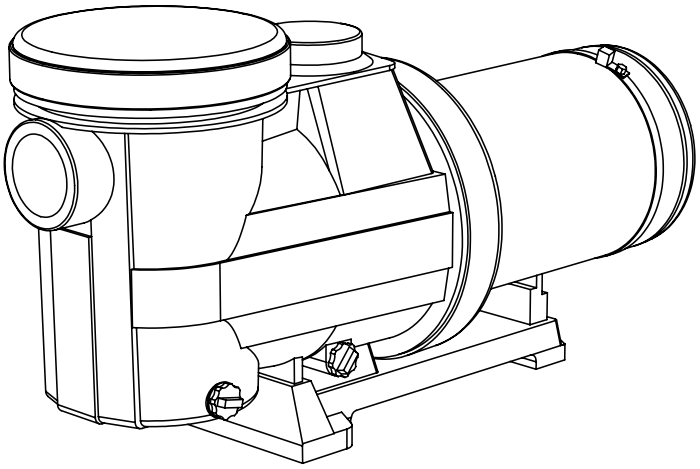

MAGNUM Force V®

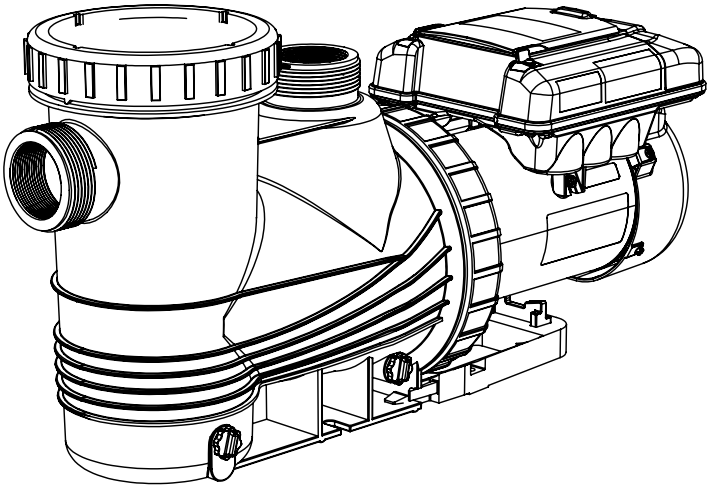

MAGNUM Force®

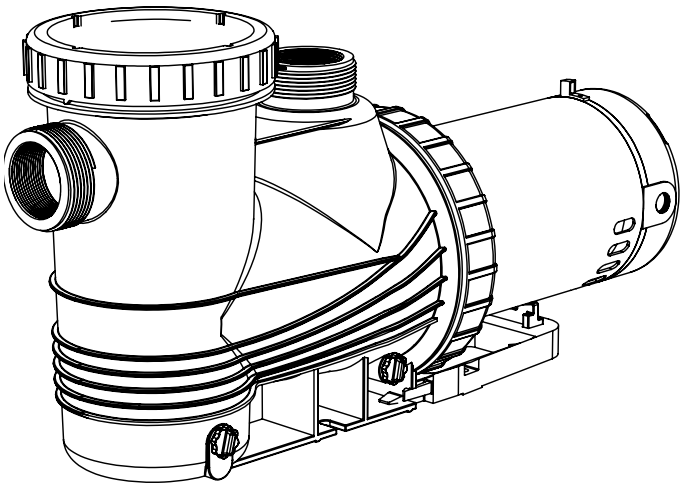

MAGNUM Force 3®

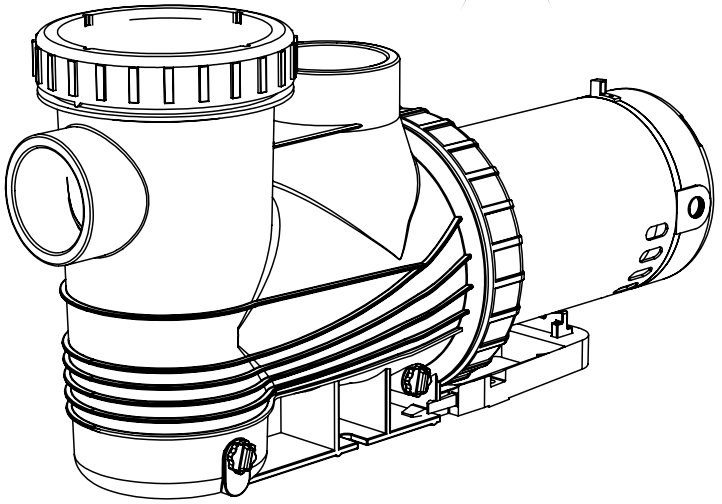

ÉQUIPEMENTS DE PISCINE CARVIN®| 4000 boul. Casavant Ouest, Saint-Hyacinthe, Québec, Canada, J2S 9E3
M221666073500_EN | © 2022 Le Groupe VIF Inc. Tous droits réservés.

CARVIN ÉQUIPEMENTS DE PISCINE POOL EQUIPMENT

TABLE DES MATIÈRES

INTRODUCTION 2

READ AND FOLLOW ALL INSTRUCTIONS 2

INSPECTION 2

IMPORTANT SAFETY INSTRUCTIONS 2

INSTALLATION LOCATION 3

PLUMBING 3

THREADED CONNECTIONS 3

PUMP PLUMBING 3

ELECTRICAL DATA 3

PUMP START-UP 3

TWO-SPEED PUMPS 4

VARIABLE SPEED PUMPS 4

THREE-PHASE MOTOR 4

WATER CHEMISTRY 4

PUMP MAINTENANCE 4

CLEANING HAIR AND LINT STRAINER 4

CONTROLLING THE OUTPUT 4

TROUBLESHOOTING 4

REPLACEMENT PARTS 5

CONSUMER INFORMATION 8

REPLACEMENT PARTS AVAILABILITY 8

WARRANTY 8

TECHNICAL SUPPORT INFORMATION 8

INTRODUCTION

Thank you for purchasing the In ground Pool Pump MAGNUM®, MAGNUM FORCE®, MAGNUM FORCE V® or MAGNUM FORCE 3® by CARVIN®.

We want to help you get the best results from your new product and operate it safely. This manual contains information on how to do that; please read it carefully before installing and using the pool. If a problem should arise, or if you have any questions about your product, consult an authorized CARVIN® retailer or distributor.

All the information in this manual is based on the latest product information available at the time of publication. The manufacturer reserves the right to make changes at any time without notice and without incurring any obligation. No part of this publication may be reproduced without written permission.

READ AND FOLLOW ALL INSTRUCTIONS

Review all instructions provided with the product prior to its installation, start-up, operation, shut-down, maintenance or winterizing.

Failure to follow warnings and safety messages may result in property damage or personal injury. The user assumes the bodily or material risks arising from any improper use of this product.

INSPECTION

Inspect the equipment as soon as you receive it. Notify your retailer if any parts are missing or damaged. Check that the specifications for the size and model are correct.

IMPORTANT SAFETY INSTRUCTIONS

Your safety and the safety of others are very important.

This manual provides important safety messages. A safety message alerts you to potential hazards that could hurt you or others. Each safety message is identified by a black box marked, WARNING.

When installing and using this electrical appliance, basic safety precautions must always be observed, including the following:

⚠ WARNING **RISK OF SUCTION ENTRAPMENT HAZARD WHICH, IF NOT AVOIDED, MAY RESULT IN SERIOUS INJURY OR DEATH.**

Pumps can quickly generate high suction, which poses the risk of entrapment if improperly connected to suction outlets. Disembowelment, entrapment, or drowning is possible when body parts or hair contact damaged, cracked, missing, or unsecured drain covers and suction outlets. Pumps and fittings shall be installed in accordance with the latest IAF standards, CPSC guidelines, and national, state and local codes, to minimize this risk. Some of those requirements are as follows. Always consult the latest regulations to ensure that your installation meets the necessary requirements to minimize suction entrapment.

1. All fully submerged Suction Outlet Covers shall be listed to ANSI/APSP 16-2017 / VGB-2017.
2. Do not use a pump in an installation where there is only one fully submerged single suction outlet.
3. If main drains are installed in your pool, there must be a minimum of two for each pumping system, and each drain must include a Listed Suction Outlet Cover. Wading pools may have additional requirements to minimize entrapment hazards.
4. Skimmers may supply 100% of the required flow to the pump, and must be vented to atmosphere. A skimmer is not considered a second main drain.
5. When two suction outlets are used, the maximum system flow rate shall not exceed the rating of any one of the listed suction outlet covers installed. When more than two are used, the sum of the ratings shall be at least twice the maximum system flow rate.
6. Each Suction Outlet Cover shall be separated by a minimum of three feet (3'), measured from center of suction pipes.
7. Avoid installing check valves. If check valves must be used, ensure that the installation conforms to applicable standards.
8. Never use the pool or spa if a Suction Outlet Cover is damaged, cracked, missing, or not securely attached. Suction outlet cover must be attached with stainless steel screws supplied with the cover. If screws are lost, order replacement parts from your supplier.

⚠ WARNING **To reduce risk of injury, do not permit children to use this product unless they are closely supervised at all times.**

⚠ WARNING **(For cord & plug connected units) Risk of Electric Shock. Connect only to a grounding type receptacle protected by a ground-fault circuit-interrupter (GFCI). Contact a qualified electrician if you cannot verify that the receptacle is protected by a GFCI.**

⚠ WARNING **(For cord & plug connected units) Do not bury cord. Locate cord to minimize abuse from lawn mowers, hedge trimmers and other equipment.**

⚠ WARNING **(For cord & plug connected units) To reduce the risk of electric shock, replace damaged cord immediately.**

⚠ WARNING **(For hot tub and spa pumps) Do not install within an outer enclosure or beneath the skirt of the hot tub or spa, unless so marked.**

⚠ WARNING **(For cord & plug connected units) To reduce the risk of electric shock, do not use an extension cord to connect unit to electric supply; provide a properly located outlet.**

⚠ WARNING **Locate the pump at least five feet (1.5M) from the pool to prevent it being used as a means of access to the pool by young children. (See ANSI/NSPI-8 1996 "Model Barrier Code For Residential Swimming Pools, Spas and Hot Tubs".)**

⚠ WARNING **(For swimming pool pumps intended for use with permanent swimming pools or spas) this pump is for use with permanently-installed pools and may also be used with hot tubs and spas if so marked. Do not use with storable pools. A permanently installed pool is constructed in or on the ground or in a building such that cannot be readily disassembled for storage. A storable pool is constructed so that it is capable of being readily disassembled for storage and reassembled to its original integrity.**

⚠ WARNING **(For all permanently-installed units intended for use on 15 or 20 ampere, 125 through 240 volts, single phase branch circuits). The unit must be connected only to a supply circuit that is protected by a ground-fault circuit interrupter (GFCI). Such GFCI should be provided by installer and should be tested on a routine basis. To rest the GFCI, push the test button. The GFCI should interrupt power. Push the reset button. Power should be restored. If the GFCI fails to operate in this manner, the GFCI is defective. If the GFCI interrupts power to the pump without the test button being pushed, a ground current is flowing, indicating the possibility of an electric shock. Do not use this pump. Disconnect the pump and have the problem corrected by a qualified service representative before using.**

INSTALLATION LOCATION

Locate the pump as close to pool/spa as possible, but keep at a minimum distance of five feet (1.5M). (See previous Warning.) Locate the pump preferably in a dry, well ventilated area away from direct sunlight. It should be on a hard, level surface. Give consideration to: drainage-away from pump, ventilation of pump motor, access for future servicing and winterizing, and protection from the elements. Pumps without strainer bodies are designed for flooded suction (all suction fittings and suction piping below water level) and will not self-prime. Consequently, the pump must be installed at an elevation that is below water level when pool or spa is filled; however, if suction line valves are installed, the pump may be located above the water level since the valve can be closed for priming. Keep vertical distance to a minimum if you choose to mount pump above water level. Pumps with strainer bodies are self-priming but should be mounted as close to the water level as possible or below for ease in priming.

PLUMBING

FOR SOLVENT WELD CONNECTIONS
Rigid or flexible PVC pipe can be used. Pipe ends should be clean and free of any flash caused by the cutting operation. Be sure that the proper adhesive is used on the type of pipe specified. Recommended Adhesives - These are examples only and are not intended to restrict brands:

PVC-PVC CONNECTION
OATLEY Uni-Weld Pool-Tite 2300
IPS Weld-On 705

PVC-ABS CONNECTION
OATLEY Uni-Weld Pool-Tite 2300
IPS Weld-On 705

Note: A primer will assure that adhesive joints are superior. Some primers have a purple tracer to qualify in areas where codes specify a primer must be used.

Caution: We recommend that you consider climatic conditions when applying adhesives. Certain atmospheric situations, such as high moisture content, make the adhesive action of certain glues less effective. Check the manufacturer's instructions.

THREADED CONNECTIONS

Use only Teflon tape or equivalent on threaded plumbing connections. Other pipe compounds may damage threads. We do not recommend the use of silicone or petroleum based compounds. DO NOT OVER-TIGHTEN: HAND TIGHTEN PLUS 1/2 TURN IS SUFFICIENT

PUMP PLUMBING

Suction pipe should be as large or larger than discharge pipe. Avoid using a suction pipe smaller than pump connection. Keep the piping as straight and short as possible, and of suitable size. Avoid connecting an elbow directly into the pump inlet (use a length of straight pipe to allow a proper entry for the water). Arrange horizontal runs to slope upward to the pump to prevent high spots that could form air pockets. Support the piping independently so that it places no strain on the pump. Keep as much of the suction line as possible below the water level to reduce priming time. Install valves and unions in the pump suction and return lines to facilitate servicing.
Valves are recommended for throttling the pump discharge. The valves are essential for pump maintenance if the system is installed below deck level. Suction valves are essential for priming all pumps without strainer bodies installed above water level. Pumps with strainer bodies are self-priming. Keep the valve in the suction line fully open during operation.

ELECTRICAL DATA

Refer to information on motor nameplate for electrical service data. All motors should have fused disconnect switch or circuit breaker. Be sure wire size is sufficient for pump HP and distance from power source. Wiring should be done in accordance with applicable codes by a competent electrician. We recommend the installation of a ground fault circuit interrupter for maximum safety.

PUMP START-UP

Do not operate pump until it has been primed as water acts to cool and lubricate the seal. For pumps without strainer bodies and located above water, close suction line valve and fill pump with water in order to prime. For pumps with strainer bodies and located above water, prime by removing strainer cover and filling strainer body with water. Pumps located below water level will self-prime if all piping is also below water level. After pump has been primed, energize

motor and open all suction and discharge line valves. It may take some time for pump to remove air from the suction lines. If no flow is observed in five minutes, stop the motor and re-prime. If the pump fails to operate, check for air leaks. Refer to Trouble Shooting section. After about 10 minutes of operation, check the return fittings for air bubbles. A continuous flow of air indicates leaks in the suction line. Locate and correct any leaks immediately.

CONTROLLING THE OUTPUT

Keep the gate valve in the suction line fully open during operation. Should it be necessary to control the output, use a valve in the return line.

⚠ AVERTISSEMENT **Do not re-tighten strainer Ring-lok during operation.**

⚠ AVERTISSEMENT **Do not operate pump with closed suction or discharge valves.**

TWO-SPEED PUMPS

Two-speed models are recommended in a swimming pool when high speed is needed for maximum filtration at peak periods and whenever turbidity levels are high. At other times, switch to low speed. For backwashing and vacuuming, high speed is required. In spas and hot tubs, use high speed to attain full performance in the hydrotherapy mode. At other times, such as filter/heat cycle mode, use low speed. Low speed provides sufficient flow to activate most spa heaters and provides sufficient flow for filtration. In jetted-tubs, use high speed to attain full performance in the hydrotherapy mode and use low speed for desired low flow conditions.
NOTE: Two-speed pumps must be in high speed mode to prime.

VARIABLE SPEED PUMPS

The Variable Speed Pool Pump is an efficient, high-end product with a fully integrated motor, control and user interface. This product offers great programming flexibility and variable speed capability allows significant energy savings by adjusting the motor speed to match the actual needs of the pool. This can mean lower running costs and a smaller environmental footprint. What's more, variable speed pumps are quieter than traditional pumps, helping to improve the overall swimming experience by reducing the noise generated by pool equipment. Refer to the motor manufacturer's manual for installation and user interface operating details.

NOTE: We recommend setting variable speed pumps to at least 2600 RPM to prime them.

USER MANUAL FOR VARIABLE SPEED MOTORS:
https://acim.nidec.com/motors/usmotors/-/media/USMotors/Documents/TechDocs/Manuals/Neptune-16527-THP-Pool-Pump-Installation-and-Operation-Guide.pdf

THREE-PHASE MOTOR

Pumps with three-phase motors require the installation of a starter switch or a magnetic starter with adequately sized overload heaters, in addition to the fused disconnect switch.

CHECK THE ROTATION OF A THREE-PHASE MOTOR

1) **DO NOT FILL** the pump with water.
2) Remove the bearing cap from the motor to expose the end of the shaft.
3) Switch on the power, **FOR AN INSTANT ONLY**, so that the shaft makes a few turns, and
4) Check that the shaft rotation agrees with the arrow on the pump.
5) Reverse any two leads to correct the rotation, if necessary.
6) Replace the bearing cap.
7) Fill the pump with water.

WINTERIZING

Consult your dealer for advice on winterizing your equipment if freezing temperatures occur in your locality. His knowledge of your equipment makes him the best qualified source of information. Follow his recommendations, and if these include draining the filter system, proceed as follows:

A. For sand filter: BACKWASH for 3 to 5 minutes and then set dial valve to WINTERIZE position.

B. Drain system : by loosening drain plugs (drain plugs will drain without completely removing plug from unit) and/or removing pipe caps.

If you require additional equipment, refer to their respective instruction manuals or to your retailer's recommendations.

WATER CHEMISTRY

A proper and consistent use of chemicals is necessary to maintain clean, sanitary water, prevent a spread of germ infection and control the growth of algae which can spoil the appearance and enjoyment of your pool and spa. Chlorine is the most commonly used chemical to provide clean, sanitary water. Either dry or liquid chlorine (calcium or sodium hypochlorite) can be used which should be added daily as it is dissipated by dirt and germs as well as by the sun and the wind. It is also important that the correct level of acidity or alkalinity of the pool water be maintained. This is the pH of your pool with pH 7.0 being neutral. Readings above pH 7.0 are alkaline and readings below are acid. A desirable range is 7.2 to 7.4.

PUMP MAINTENANCE

1) Motors are self-lubricated - no lubrication required.
2) Clean hair and lint strainer if you have a strainer body pump.
3) Visually inspect motor for blockage of air vents on motor shell. Remove any debris after shutting off breaker.
4) Shaft seals may become worn and must be replaced if leakage is observed.

CLEANING HAIR AND LINT STRAINER

Switch off the power. Close the valves in the suction and return line. Unscrew strainer Ring-lok counter-clock wise and remove the strainer cover from the hair and lint strainer and lift out the strainer basket. Clean and replace the basket. Take care to seat the basket properly. Clean the O-Ring and re-lubricate with silicone based lubricant. Clean O-ring seats on the cover strainer. Refit the cover and strainer Ring-Lok, hand-tighten only, and open the valves. Put the pump back into operation.

⚠ AVERTISSEMENT **Do not re-tighten strainer Ring-lok during operation.**

TROUBLESHOOTING

MOTOR DOES NOT START : Disconnect switch open or fuses blown; Motor windings burned out; Defective starting switch inside motor or defective wiring.

MOTOR DOES NOT REACH FULL SPEED: Low voltage; Shaft binding or impeller rubbing.

MOTOR OVERHEATS (HEAT PROTECTOR TRIPS) : Low voltage; Inadequate ventilation.

PUMP DELIVERS LITTLE, OR NO WATER/LOW PRESSURE : Pump not primed; Leakage of air into suction system; Impeller clogged; Valve in suction or discharge line partly closed; Suction or discharge line partly plugged or too small; Plugged basket in skimmer or hair in lint strainer; Dirty filter.

HIGH PUMP PRESSURE : Discharge valve or inlet fittings closed too much; Return lines too small; Dirty filter.

NOISY PUMP AND MOTOR : Plugged basket in skimmer or hair in lint strainer; Defective motor bearings; Valve in suction line partly closed or line partly plugged; Vacuum cleaner hose plugged or too small; Piping causing strain on pump case; Impeller rubbing on pump case.

LEAKAGE OF WATER AT SHAFT : Shaft seal requires replacement.

AIR BUBBLES AT INLET FITTINGS : Leakage of air into suction line or strainer; Restriction in suction line; Low water level in pool.

MAGNUM ®

REMPLACEMENT PARTS

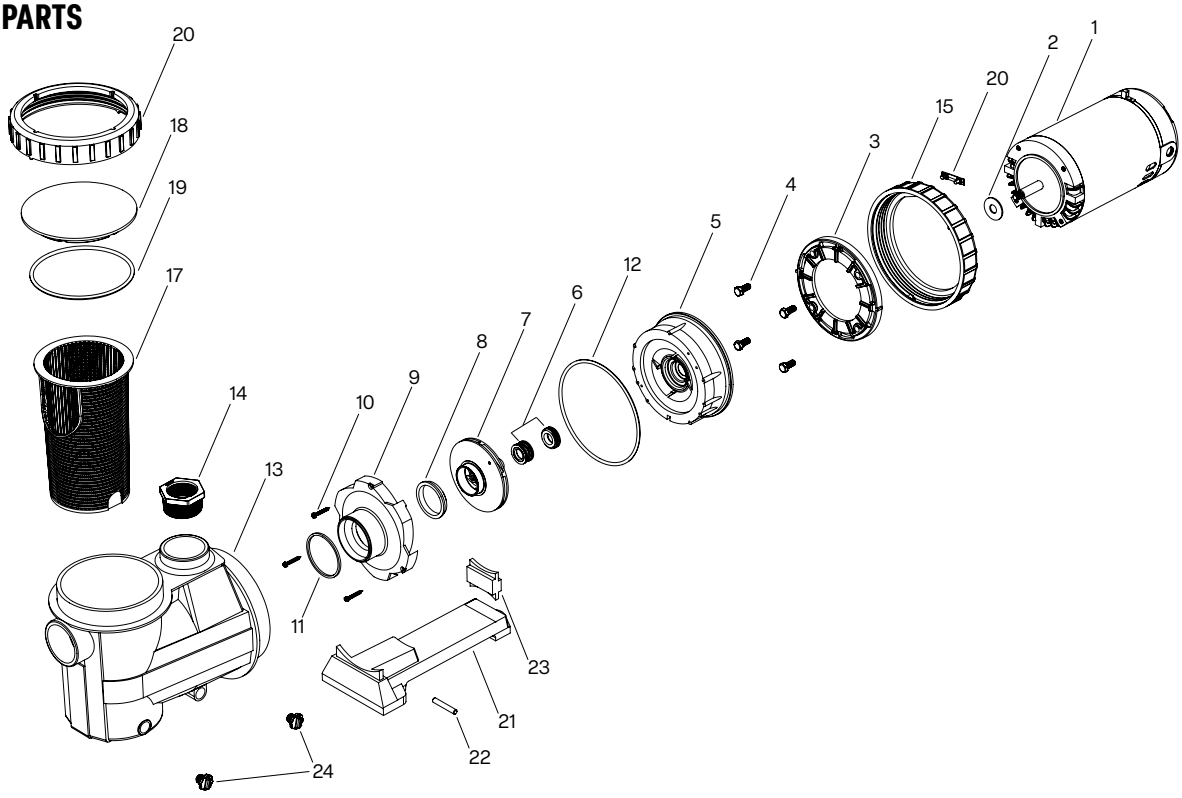

No.	Part No.	Description
1	-	Motor (Contact your local dealer)
2	22340301R	Flinger
3	02136802R	Motor Housing Bracket
4	14129324R	Hex Cap Screw ⅜ x 16 x ⅞» (4/bag)
5	02136604R 02160901R 02136703R	Seal Housing Assembly 5 MAG-F, 7 MAG-F, 1MAG-F, 5 MAG-U, 7 MAG-U, 1 MAG-U, 15 MAG-U 2 MAG-F, 25 MAG-U 15 MAG-F, 2MAG-U, 3 MAG-F
6	10139020R	Shaft Seal
7	05380001R 05380100R 05380209R 05380308R 05385208R 05380506R	Impeller Assembly With Wear Ring 5 MAG-F, 7 MAG-F 7 MAG-F, 1 MAG-U 1 MAG-F, 15 MAG-U 15 MAG-F, 2 MAG-U 2 MAG-F, 25 MAG-U 3 MAG-F
8	10146207R 10146314R 10146413R	Seal Ring 5 MAG-F, 7 MAG-F, 1 MAG-F, 7 MAG-U, 1 MAG-U, 15 MAG-U 15 MAG-F, 2 MAG-F, 2 MAG-U, 25 MAG-U 3 MAG-F
9	06015705R 06016307R 06016604R 06016406R	Diffuser 5 MAG-F, 7 MAG-F, 1 MAG-F, 7 MAG-U, 1 MAG-U, 15 MAG-U 15 MAG-F, 2 MAG-U 2 MAG-F, 25 MAG-U 3 MAG-F
10	14420608R2	Hex Washer Head Screw #8 x 1¼» (2/bag)
11	47023254R	Square Ring Gasket
12	47036447R	O-Ring 6¾ x 7⅛»
13	03085602R	Strainer / Case
14	31272206R	Reducing Bushing 2'' MNPT x 1.5'' FNPT
15	42288605R	Pump Mounting Nut
16	42286708R	Mounting Nut Rachet
17	16109506R	Strainer Basket
18	39257902R	Strainer Cover
19	47035803R	Strainer O-Ring
20	42282806R	Écrou du couvercle
21	12261380R	Pump Base With Support #23
22	14038328R	Dowel Pin
23	12261382R	Motor Support
24	31160906R2 47011200R2	Drain Plug With O-Ring (2/bag) Drain Plug O-Ring (2/bag) (not shown)

MAGNUM Force® MAGNUM Force V® MAGNUM Force 3®

REMPLACEMENT PARTS

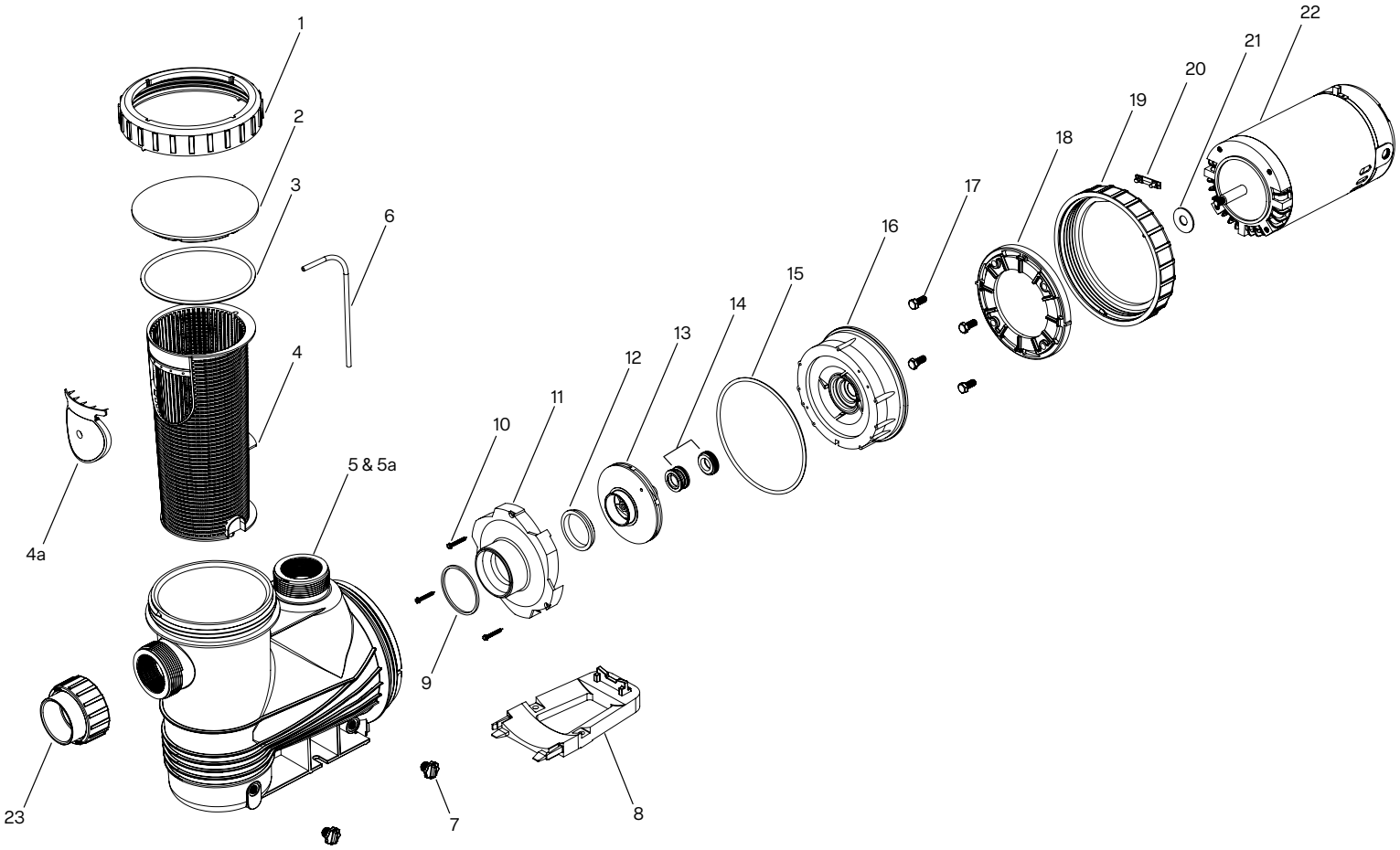

No.	Part No.	Description
1	42282806	Strainer Nut
2	39257602R	Strainer Cover
3	47035803R	O-Ring 5⅝ x 6⅛ x ¼» - units after 7 / 89
4	16108606R 16113409R	Strainer Basket (9'' Tall) With Flapper Prior To 02/01/03 Strainer Basket (12'' Tall) With Flapper After 02/01/03
4A	16113510R	Flapper
5	03090602R	Magnum Force® Body With Plug And Basket
5A	03090701R	Magnum Force 3® Body With Plug And Basket
6	31174600R	Strainer Basket Air Bleed Tube
7	31160906R 31160906R50	Drain Plug With O-Ring (2/bag) Drain Plug With O-Ring (50/bag)
8	12112603R	Pump Base with Motor Support
9	47023254R	Square Ring Gasket
10	14420608R5	Hex Washer Head Screw #8 x 1¼» SS (2, 3, or 5 req.) (5/bag)
11	-	Diffuser (see chart page 8)
12	10146207R 10146314R	Seal Ring ½ to 3 HP Seal Ring 4 and 5 HP
13		Impeller (See Chart Page 8)
14	10139020R	Shaft Seal
15	47036447R	O-Ring 6¾ x 7⅛»
16	-	Seal Housing Assembly (See Chart Page 8)
17	14129324R	PL Hex Capscrew ⅜ - 16 x ⅞» (4 req.) (4/bag)
18	02136802R	Motor Housing Bracket
19	42288605R	Pump Mounting Nut With Rachet
20	42286708R	Mounting Nut Rachet
21	22340301R	Flinger (Used On All Magnum Force ®, Magnum Force V®, Magnum Force 3®)
22	-	Motor (Contact your local dealer)
23	31150109R2	2 UN Half Kit (Incl. 2 each)
24	42234506K	Case / Base / Basket Assembly For Magnum Force® (1, 2, 3, 4, 4A, 5, 6, 7, 8)

MAGNUM Force® MAGNUM Force V® MAGNUM Force 3®

REMPLACEMENT PARTS

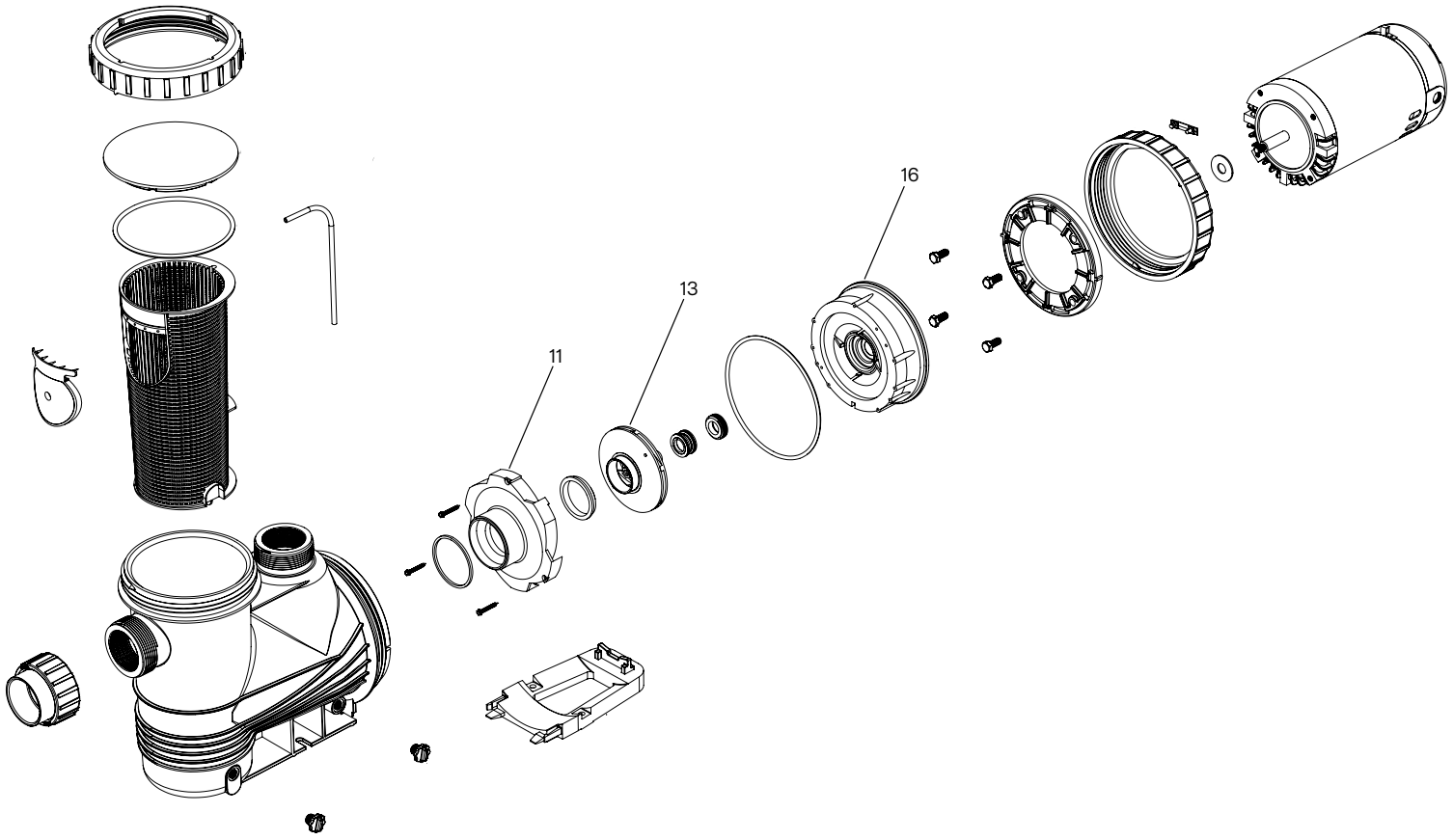

Pump Rating	Fabrication Dates	#11 Diffuser	#13 Impeller	#16 Seal Housing
½ HP full rate and ¾ HP unity 5 MF and 7 UMF	**All**	06015705R	05380001R	02136604R
¾ HP full rate and 1 HP unity 7 MF and 1 UMF	**All**	06016703R	05385505R	02139301R
1 HP full rate and 1½ HP unity 1 MF and 15 UMF	**Prior 12/02/04**	06016703R	05385406R	02139301R
1 HP full rate and 1½ HP unity 1 MF and 15 UMF and 16VFM	**After 12/02/04**	06001002R	05038203R	02139202R
1½ HP full rate and 2 HP unity 15 MF and 2 UMF	**Prior le 12/02/04**	06016517R	05381900R	02139202R
1½ HP full rate and 2 HP unity 15 MF and 2 UMF	**After 12/02/04**	06001002R	05038202R	02139202R
2 HP full rate and 2½ HP uprate 2 MF, 25 UMF	**Prior le 12/02/04**	06016517R	05381801R	02139202R
2 HP full rate and 2½ HP uprate 2 MF, 25 UMF and 27VFM	**After 12/02/04**	06001002R	05038401R	02139202R
3 HP full rate and 3 HP unity 3 MF and 3 UMF3	**All**	06016517R	05019500R	02139202R
4 HP uprate 4 UMF3	**All**	06000806R	05037304R	02139202R
5 HP uprate 5 UMF3	**All**	06000806R	05037106R	02139202R

CONSUMER INFORMATION

Authorized CARVIN® retailer or distributor personnel are trained professionals. They should be able to answer any question you may have. If you encounter a problem that your retailer or distributor does not solve to your satisfaction, please discuss it with the retailer's or distributor's management. The Service Manager, General Manager, or Owner can help. Almost all problems are solved in this way.

If you are not satisfied with the decision made by the retailer's or distributor's management, contact the CARVIN® technical support.

When you write or call, please provide the following information:

- Product model, serial number and date code.
- Name of retailer or distributor who sold the Product to you.
- The original proof of purchase showing the date of purchase.
- Your name, address and telephone number.
- A detailed description of the problem.
- If sending an email, any relevant photos of the Product and its surroundings.

REPLACEMENT PARTS AVAILABILITY

Replacement parts are available through your CARVIN® retailer or distributor.

WARRANTY

A digital warranty is provided for your product.
https://carvinpool.com/link_waranty

TECHNICAL SUPPORT INFORMATION

After contacting your dealer or distributor, if you have any problems with your Product, contact CARVIN® Technical Support.

AMERICA

Web: carvinpool.com/support
Email: help@carvinpool.com
Phone: 1 (450) 250-4500 option 2
Fax: 1 (450) 250-4501
Toll Free: 1 866 979-4501
Mail: CARVIN® POOL EQUIPMENT
Technical Support
4000 boul. Casavant West,
Saint-Hyacinthe, Quebec, Canada, J2S 9E3

CARVIN
ÉQUIPEMENTS DE PISCINE
POOL EQUIPMENT

Le Groupe VIF Inc.
4000, boulevard Casavant West, Saint-Hyacinthe
Quebec, Canada, J2S 9E3

www.carvinpool.com
CARVIN® is a registered trademark of Le Groupe VIF Inc.
In Canada and the United States of America.

vif