INTRODUCTION

WHM series motor are small volume, economical type, which is designed with shaft distribution flow, which adapt the Gerotor gear set design and provide compact volume, high power and low weigth.

CHARACTERISTICS

1. Advanced manufacturing devices for the Gerotor gear set, which provide small volume, high efficiency and long life.
2. Shaft seal can bear high pressure of motor of which can be used in parallel or in series.
3. Advanced construction design, high power and low weight.

APPLICATION

- Conveyors
- Textile machines
- Mining machinery
- Machine tools
- Ventilators
- Construction plant equipment and access platforms etc.

SPECIFICATION DATA

TYPE		GMM-8	GMM-12.5	GMM-20	GMM-32	GMM-40	GMM-50
Displacement (ml/r)		8.2	12.9	19.9	31.6	39.8	50.3
Max.Pressure.Drop (Mpa)	cont.	10	10	10	10	9	7
	int.	14	14	14	14	14	14
	peak.	20	20	20	16	16	16
Max torque (Nim)	cont.	11	16	25	40	45	46
	int.	15	23	35	57	70	88
	peak	21	33	51	64	82	100
Speed.Range(cont.)(r/min)		1950	1550	1000	630	500	400
Max.Flow(cont.)(L/min)		16	20	20	20	20	20
Max.Output.Power(cont.)(Kw)		1.8	2.4	2.4	2.4	2.2	1.8
Weight (kg.)		1.9	2.0	2.1	2.2	2.3	2.4

GEROTOR®

Type		Max.inlet pressure
OHM-50 (MPa)	cont.	17.5
	int.	22.5

- Continuous pressure: Max. value of operating motor continuously.
- Intermittent pressure: Max. value of operating motor in 6 seconds per minute.
- Peak pressure: Max. value of operating motor in 0.6 second per minute.

GEROTOR®

FUNCTION DIAGRAMS

GMM 8 [8.2 cm³/rev.]

Flow (L/min) \ Pressure (MPa)	3.5	5	7	10 (Max.cont.)	12	14 (Max.int.)
2	3 **228**	5 **218**	8 **206**	10 **156**	12 **111**	14 **58**
4	3 **474**	5 **471**	7 **463**	11 **426**	13 **391**	15 **331**
8	3 **953**	5 **946**	7 **926**	11 **884**	13 **855**	15 **816**
12	2 **1444**	5 **1426**	7 **1402**	10 **1360**	13 **1324**	15 **1288**
15 (Max.cont.)		4 **1912**	7 **1900**	10 **1861**	12 **1833**	14 **1780**
20 (Max.int.)		0 **2432**	6 **2395**	10 **2350**	11 **2328**	14 **2281**

GMM 12.5 [12.9 cm³/rev.]

Flow (L/min) \ Pressure (MPa)	3.5	5	7	10 (Max.cont.)	12	14 (Max.int.)
2	6 **140**	8 **136**	11 **119**	16 **68**	19 **35**	
4	6 **296**	8 **289**	12 **274**	17 **229**	19 **200**	23 **145**
8	5 **605**	8 **596**	12 **583**	17 **543**	20 **514**	24 **469**
12	5 **912**	8 **905**	11 **895**	16 **859**	20 **834**	24 **784**
15	5 **1152**	7 **1144**	11 **1136**	16 **1102**	19 **1078**	23 **1036**
20 (Max.cont.)	3 **1542**	7 **1532**	10 **1521**	15 **1500**	19 **1482**	22 **1437**
25 (Max.int.)	2 **1910**	6 **1891**	9 **1878**	14 **1848**	18 **1828**	22 **1788**

GMM 20 [19.9 cm³/rev.]

Flow (L/min) \ Pressure (MPa)	1.7	3.5	5	7	10 (Max.cont.)	12	14 (Max.int.)
2	3 **99**	9 **96**	14 **89**	19 **74**	26 **42**	30 **21**	
4	4 **197**	9 **191**	14 **182**	19 **178**	26 **134**	31 **112**	36 **74**
8	4 **398**	9 **395**	13 **391**	19 **377**	27 **340**	31 **319**	36 **288**
12	3 **596**	8 **594**	13 **588**	18 **579**	26 **545**	31 **523**	37 **493**
15	3 **745**	8 **741**	12 **738**	17 **728**	25 **695**	30 **684**	36 **660**
20 (Max.cont.)	1 **998**	6 **995**	11 **991**	19 **985**	24 **962**	29 **916**	35 **885**
25 (Max.int.)		4 **1247**	9 **1245**	14 **1242**	23 **1189**	28 **1180**	33 **1176**

GMM 32 [31.6 cc/rev.]

Flow (L/min) \ Pressure (MPa)	2	3.5	5	7	10 (Max.cont.)	12	14 (Max.int.)
2	7 **61**	15 **57**	21 **52**	28 **47**	40 **16**		
4	7 **126**	15 **121**	21 **114**	29 **106**	41 **82**	48 **67**	57 **49**
8	7 **250**	15 **244**	21 **239**	29 **231**	41 **207**	49 **194**	58 **167**
12	6 **378**	13 **374**	20 **369**	28 **362**	40 **338**	48 **322**	58 **297**
15	4 **476**	12 **472**	18 **468**	27 **462**	39 **441**	47 **429**	57 **406**
20 (Max.cont.)	3 **633**	10 **630**	17 **627**	25 **619**	37 **601**	46 **585**	55 **566**
25 (Max.int.)	1 **791**	8 **789**	15 **787**	23 **783**	35 **766**	43 **753**	52 **732**

GMM 40 [39.8 cm³/rev.]

Flow (L/min) \ Pressure (MPa)	3	5	7	8.5 (Max.cont.)	10	12 (Max.int.)
2	16 **45**	27 **40**	36 **34**	44 **28**	51 **17**	
4	16 **96**	27 **93**	37 **85**	44 **79**	52 **65**	62 **52**
8	15 **197**	26 **195**	36 **182**	44 **176**	52 **166**	63 **154**
12	14 **293**	25 **287**	35 **282**	43 **277**	51 **268**	62 **257**
15	13 **371**	24 **365**	34 **360**	42 **355**	50 **347**	62 **338**
20 (Max.cont.)	10 **497**	21 **492**	31 **487**	39 **480**	48 **472**	59 **463**
25 (Max.int.)	7 **622**	19 **617**	29 **612**	37 **607**	44 **600**	56 **591**

Torque (N•m) 37
Speed (rpm) **607**

GMM 50 [50.3 cm³/rev.]

Flow (L/min) \ Pressure (MPa)	1.5	3	5	7 (Max.cont.)	10 (Max.int.)
2	11 **37**	23 **33**	36 **27**	50 **22**	
4	11 **76**	22 **73**	36 **68**	50 **63**	70 **55**
8	11 **157**	21 **154**	35 **149**	50 **145**	71 **137**
12	11 **237**	20 **234**	33 **231**	49 **226**	71 **218**
15	10 **296**	18 **295**	32 **294**	47 **288**	69 **282**
20 (Max.cont.)	8 **395**	14 **395**	29 **393**	44 **390**	64 **381**
25 (Max.int.)	4 **498**	10 **496**	25 **494**	40 **490**	59 **484**

cont.
int.

GEROTOR®

Installation

Flange M, U

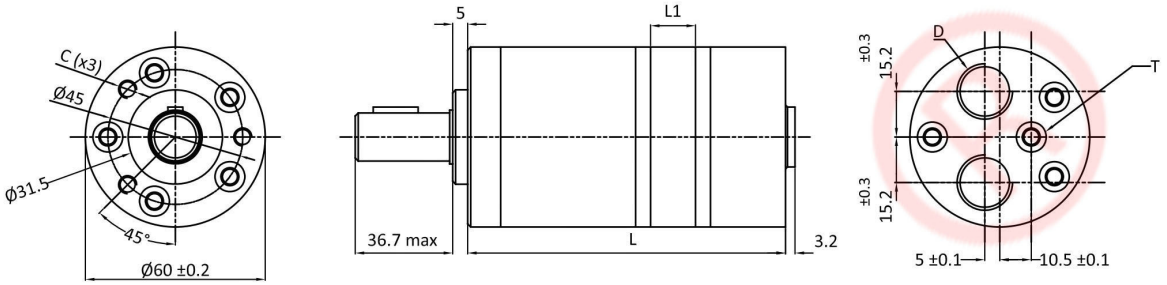

Flange F

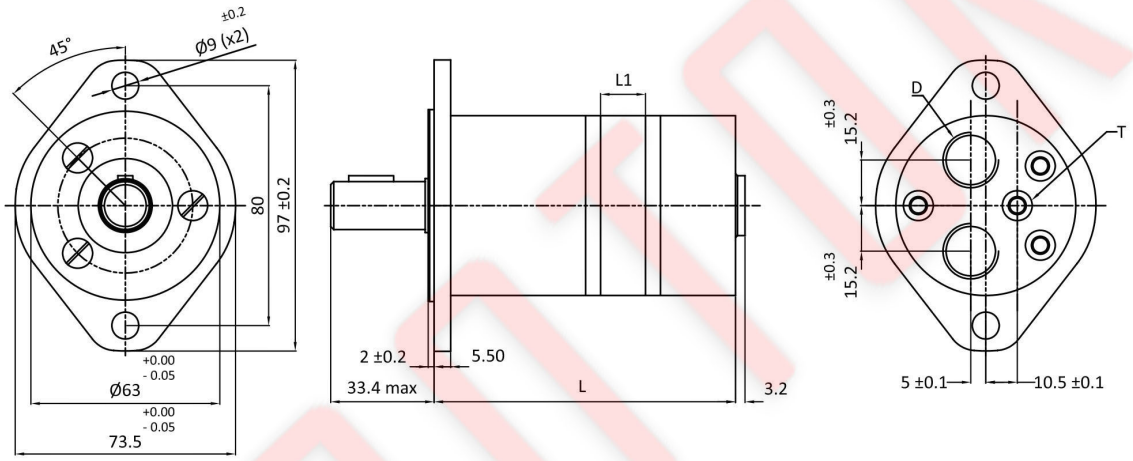

TYPE	FLANGE	GMM-8	GMM-12.5	GMM-20	GMM-32	GMM-40	GMM-50
L	M,U	104	106	109	114	117.5	122
L1	M,U	3.5	5.5	8.5	13.5	17	21.5
L	F	107.5	109.5	112.5	117.5	121	125.5
L1	F	3.5	5.5	8.5	13.5	17	21.5

	M, U Flange		F Flange	
Mounting Code	1E (depth)	1U (depth)	1E (depth)	1U (depth)
C	3-M6 (10)	3-1/4-28UNF-2B(10)	--	--
D	G3/8 (12)	9/16-18UNF(12)	G3/8 (12)	9/16-18UNF(12)
T	G1/8 (8)	3/8-24UNF(8)	G1/8 (8)	3/8-24UNF(8)

GEROTOR®

Installation

Flange M, U

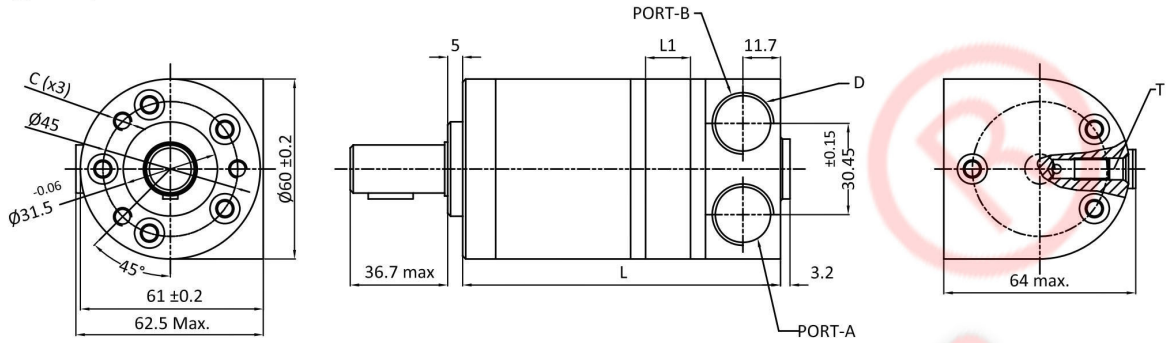

Flange F

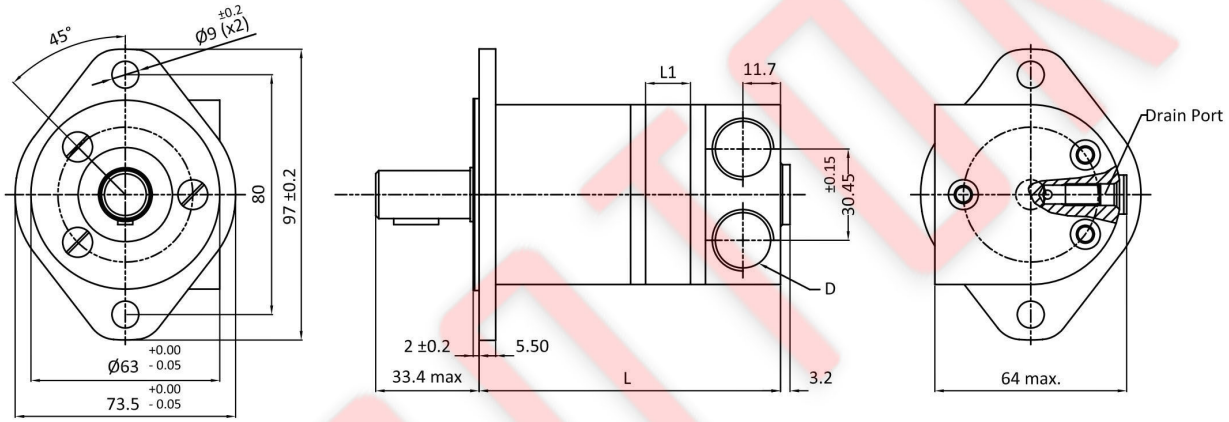

TYPE	FLANGE	GMM-8	GMM-12.5	GMM-20	GMM-32	GMM-40	GMM-50
L	M,U	105	107	110	115	118.5	123
L1	M,U	3.5	5.5	8.5	13.5	17	21.5
L	F	108.5	110.5	113.5	118.5	122	126.5
L1	F	3.5	5.5	8.5	13.5	17	21.5

	M, U Flange		F Flange	
Mounting Code	E (depth)	U (depth)	E (depth)	U (depth)
C	3-M6 (10)	3-1/4-28UNF-2B(10)	--	--
D	G3/8 (12)	9/16-18UNF(12)	G3/8 (12)	9/16-18UNF(12)
T	G1/8 (8)	3/8-24UNF(8)	G1/8 (8)	3/8-24UNF(8)

SHAFT VERSION

P: Ø16, 5X5X16
Ø16 Cylidrical shaft, parallel key 5X5X16

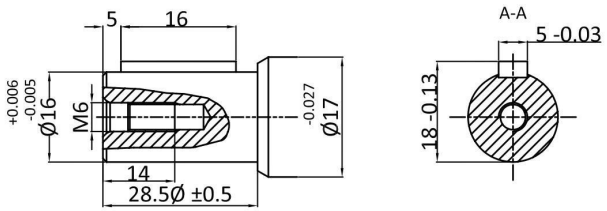

P1: Ø15.875, 4.8X4.8X19.05
Ø15.875 Cylidrical shaft, parallel key 4.8X4.8X19.05

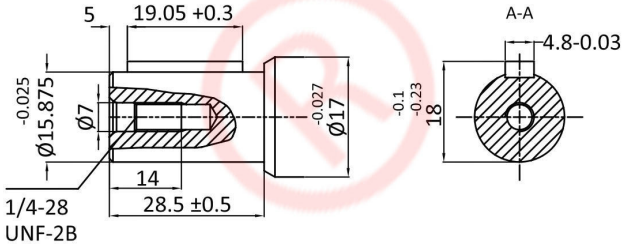

H1: Involute splines shaft
B17x14 DIN 5482

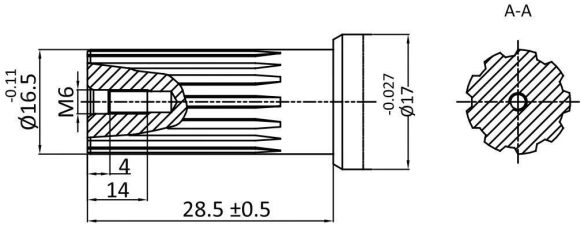

ORDERING CODE

		1	2	3	4
GMM	-				

1	Displacement
	8, 12.5, 16, 20, 32, 40, 50

2	Shaft
P	Ø16, 5X5X16
P1	Ø15.875, 4.8X4.8X19.05
H1	Ø16.5, involute B17x14, DIN5482

3	Mounting Flange
M	3-M6, Ø31.5X5
U	3-1/4-28UNF, Ø31.5X5
F	2-Ø9 Rhomb-flange, Ø63X2

4	Ports	
	P (A,B)	T
E	G3/8,	G1/8
U	9/16-18UNF	3/8-24UNF
1E	G3/8	G1/8
1U	9/16-18UNF	3/8-24UNF