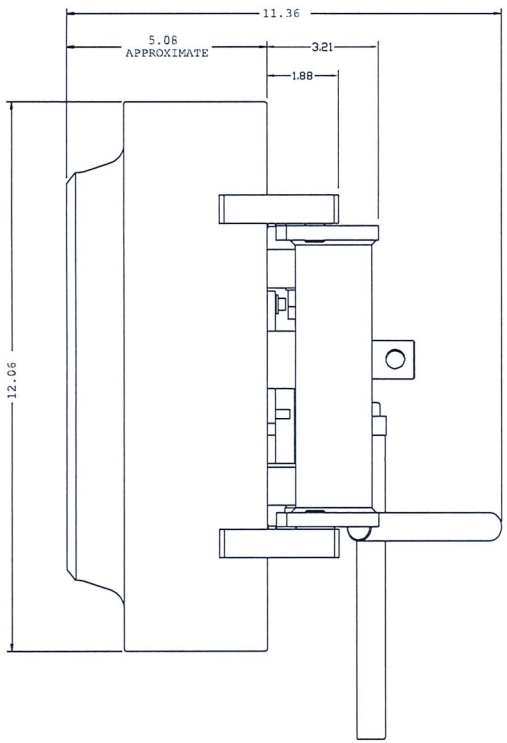

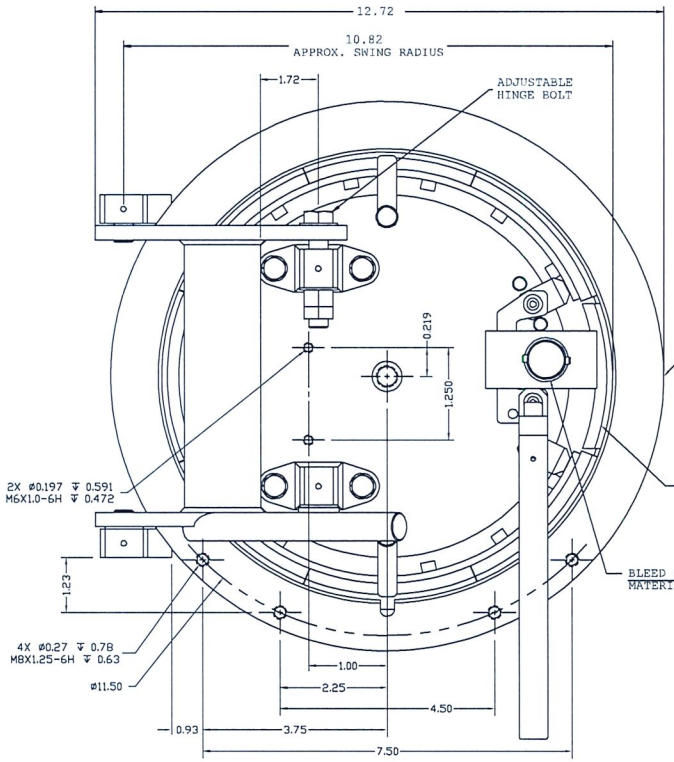

TUBE TURNS® HINGED CLOSURE
SYPRIS TECHNOLOGIES, INC.
TUBE TURNS PRODUCTS
LOUISVILLE, KENTUCKY, USA

SIZE	8	PSIG EXT	PSIG INT	WARNING! DO NOT OPEN UNDER PRESSURE. READ ALL INSTRUCTIONS BEFORE OPERATING. FAILURE TO COMPLY WITH WARNINGS MAY RESULT IN PERSONAL INJURY AND PROPERTY DAMAGE.
CLASS	600	FV	825	
MATL	CS	TMP MIN	TMP MAX	
SEAL	BN	-20	200	

PRODUCT IDENTIFICATION LABEL

U
PART
SYPRIS
TUBE

SERIAL NUMBER
CERTIFIED BY
TECHNOLOGIES, INC.
TURNS PRODUCTS

ASME LABEL

MATERIAL: BLEED SCREW - ASME SA-479 304 STAINLESS STEEL
INTERLOCK SEGMENT - ASME SA-182 F304 STAINLESS STEEL
CONNECTING ARM - 304 STAINLESS STEEL
SPRING PINS - 18-8 STAINLESS STEEL
BLEED SCREW O-RING - BUNA-N

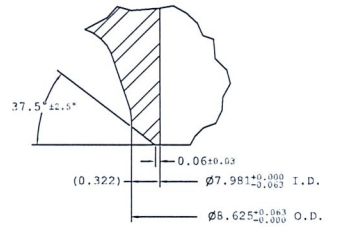

DETAIL "A"

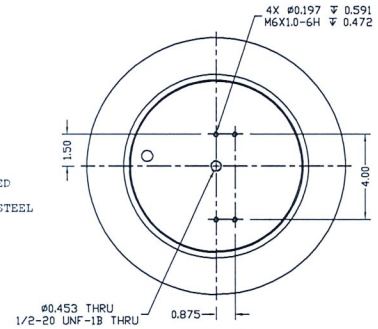

REAR VIEW

TUBE TURNS SALES ORDER NO.
ITEM - 001 1 - REQUIRED

NOTES

1. MATERIAL: HUB - ASME SA350-LF2 CL.1/A694-F46 CARBON STEEL - DUAL CERTIFIED
   HEAD - ASME SA350-LF2 CL.1 CARBON STEEL
   LOCKING SEGMENTS - ASME SA-312 TP304 OR SA-182 F304 STAINLESS STEEL
   LOCKING BAND - 304 STAINLESS STEEL
   DOOR SEAL - BUNA-N
   GASKET ANTI-EXTRUSION RING - 316 STAINLESS STEEL
   REMAINING STRUCTURAL COMPONENTS & HARDWARE - CARBON STEEL
2. REFERENCE:
3. DETERMINATION OF COMPATIBILITY OF SEAL WITH MEDIUM IS THE RESPONSIBILITY OF THE PURCHASER AND/OR END USER.
4. CLOSURE IS DESIGNED AND CONSTRUCTED IN ACCORDANCE WITH THE ASME BOILER AND PRESSURE VESSEL CODE, SECTION VIII, DIVISION 1. THE ASME CERTIFICATION MARK AND PARTIAL DATA REPORT ARE INCLUDED.

SYPRIS® TECHNOLOGIES
Tube Turns Products

PRODUCT ENGINEERING DEPARTMENT

	BY	DATE
DRAWN	FWM	03-27-15
APPROVED	GNP	03-27-15

8" CLASS 600H LH
TOOL-LESS CLOSURE
GENERAL DIMENSION DRAWING

SCALE NONE
DRAWING NO.
REVISION - 3