COPPERTON TOWN COUNCIL

ORDINANCE NO. 2025-O-04 DATE: May 21, 2025

AN ORDINANCE OF THE TOWN OF COPPERTON APPROVING AND ADOPTING ENGINEERING STANDARD DRAWINGS AND SPECIFICATIONS FOR THE TOWN OF COPPERTON

WHEREAS, following its incorporation as a municipality in 2017, the Town of Copperton ("**Copperton**") has received its engineering services from Salt Lake County Public Works Engineering through the Greater Salt Lake Municipal Services District's ("**MSD**") master interlocal agreement with Salt Lake County; and

WHEREAS, because Copperton received its engineering services from Salt Lake County, Copperton has followed the Salt Lake County Engineering and Flood Control Standard Drawings and Specifications; and

WHEREAS, effective January 1, 2025, the MSD established its own engineering department to provide engineering services directly to its member entities, including Copperton; and

WHEREAS, now that the MSD is providing engineering services directly to Copperton, the City Council desires to adopt updated and revised engineering standard drawing standards to replace the County's standards.

NOW, THEREFORE, BE IT ORDAINED BY THE COPPERTON TOWN COUNCIL AS FOLLOWS:

A. Adoption of Engineering Standards. The attached document titled "Copperton Engineering Standard Drawings and Specifications" is adopted as the official standards for the Town of Copperton (the "**Standards**").

B. Direction to Staff. The Mayor and applicable Copperton staff and contractors authorized and directed to take such steps as may be needed: (a) for this Ordinance to become effective under Utah law, including but not limited to compliance with the requirements of Utah Code §§ 10-3-711 and 10-3-712; and (b) to use and apply the Standards in accordance with applicable laws, regulations, and ordinances.

C. Severability. If a court of competent jurisdiction determines that any part of this Ordinance is unconstitutional or invalid, then such portion of this Ordinance, or specific application of this Ordinance, shall be severed from the remainder, which shall continue in full force and effect.

D. Effective Date. This Ordinance will take effect immediately upon its posting pursuant to Utah Code § 10-3-712.

ADOPTED AND APPROVED at a duly called meeting of the Copperton Town Council on this 21st day of May 2025.

TOWN OF COPPERTON

_____
By: Sean Clayton, Mayor

ATTEST:

_____
Diana Baun, Town Clerk

Approved as to Form:

_____
City Attorney

Voting:
Council Member Bailey voting _____
Council Member Clayton voting _____
Council Member McCalmon voting _____
Council Member Severson voting _____
Council Member Stitzer voting _____

(Complete as Applicable)
Date ordinance summary was published on the Utah Public Notice Website per Utah Code §10-3-711:_____
Effective date of ordinance: _____

SUMMARY OF
TOWN OF COPPERTON
ORDINANCE NO. 2025-O-04

On May 21, 2025, the Copperton Town Council enacted Ordinance No. 2025-O-04 to approve and adopt engineering standard drawings and specifications for the Town of Copperton.

TOWN OF COPPERTON

_____
By: Sean Clayton, Mayor

ATTEST:

_____
Diana Baun, Town Clerk

Voting:
Council Member Bailey voting _____
Council Member Clayton voting _____
Council Member McCalmon voting _____
Council Member Severson voting _____
Council Member Stitzer voting _____

A complete copy of Ordinance No 2025-O-04 is available in the office of the Kearns City Recorder, 860 Levoy Drive, Suite 300, Taylorsville, Utah 84123.

COPPERTON
UTAH

ENGINEERING

STANDARDS & DRAWINGS

2025 Edition

Planning Commission Recommendation: May 13, 2025

City Council Approval/Adoption:

GREATER SALT LAKE
Municipal Services District

860 W Levoy Drive, Suite #300
Taylorsville, UT 84123
(385) 910-7027
msd.utah.gov/engineering

GENERAL PROVISIONS

Town of Copperton automatically adopts the latest revision of AASHTO "A Policy on Geometric Design of Highways and Streets" (Green Book), the Utah Manual on Uniform Traffic Control Devices (MUTCD), and APWA Manual of Standard Plans and Manual of Standard Specifications, with exceptions noted in this document.

The city engineer may approve exceptions to engineering standards and drawings where appropriate.

EXCEPTIONS TO APWA STANDARDS

APWA Plan No./ Specification Section	Exception
215, 216, 221.1, 221.2, 225, 229.1 & 229.2	APWA Plan No's. 221.1 and 221.2 are acceptable for use. APWA Plan No's. 215, 216, 225, 229.1, and 229.2 are not acceptable for use unless otherwise authorized by the MSD Engineer.
221.1, 221.2	When adverse slopes, right-of-way limitations, or existing obstructions occur, MSD Engineering may authorize deviations from the APWA apron/slope geometry.
251	Bituminous Concrete (asphalt) T-Patch thickness is 6" minimum for both residential and non-residential streets.
255	Bituminous Concrete (asphalt) T-Patch thickness is 6" minimum for both residential and non-residential streets. 2" mill and overlay are never required if there is a known upcoming city Capital Improvement Project that will reconstruct or overlay the road within two (2) years. Otherwise, the mill and overlay is only required when length of T-patch is over 300 feet, and existing pavement (full depth or overlay) is less than seven (7) years old.
292	Steel tube is to be 12' x 2" x 2". Standard Plan 140 in this book applies in locations where sign is installed in concrete.
315.1, 315.2 & 316	Where APWA inlet plans refer to frame and grate per APWA Plan No. 308, contractor shall use Standard Plan 201 in this book, unless otherwise authorized by the MSD Engineer.
332	The use of pre-cast "knock-out" boxes in storm drain facilities may be authorized by the MSD Engineer, upon written request and provided the following conditions are met: a) All other requirements of APWA Plan 332 - Precast Box, are still met. b) Boxes shall have engineered design for AASHTO's HL-93 live load and shall be designed for lateral soil loads appropriate for the burial depth and conditions. c) The thickness of concrete collars where the pipe enters box at the knockout face shall extend 6" to 9" from the exterior face of the box and shall cover the entire side of the structure with no less than 12" concrete all the way around the pipe. Collars shall have a minimum of four (4) #4 dowels tying the collar to the precast box and include a #4 rebar ring or square tie around the pipe. d) Inspection and certification required on all precast boxes.
381	(Note 2A) - Use granular backfill borrow for common fill.
382	(Note 2B) - Use granular backfill borrow for common fill. (Note 3A) - Minimum trench width is to be Pipe O.D. + 24" or (Pipe O.D. x 1.25)+12", whichever is greater.
33 05 02	Public storm drain pipes and culverts shall be 15" dia.or greater RCP unless otherwise authorized by the MSD Engineer. Installation must follow manufacturer's direction. Provide a minimum amount of 1' cover over top of concrete pipes and 2' cover over the top of pipes of other materials unless approved otherwise by manufacturer and MSD Engineer. Corrugated metal pipe and vitrified clay pipe are not allowed.

STANDARD DETAILS TABLE OF CONTENTS

SECTION 1 – ROADWAYS

General
Legend and Symbols.....100
Abbreviations.....101

Details
Roadway Section.....110
Curb Ramps.....135
Sign Post in Concrete.....140
Sidewalk Obstruction Detail.....150
Defective Concrete.....155

Street Light Details
Arterial LED Street Light.....160
Collector LED Street Light.....161
Industrial LED Street Light.....162
Residential LED Street Light.....163
Arterial LED Street Light Alternative.....164

SECTION 2 - STORM DRAIN FACILITIES

Hardware
Curb Opening Frame and Grate.....201
Ladder Rung.....208

Drainage Facility Guidelines
Detention Basin Guidelines.....300
Outlet Structure Guidelines.....301

SYMBOL LEGEND

DESCRIPTION	EXIST.	PROP.
SANITARY SEWER		
CLEANOUT		
SS MANHOLE		
SS VALVE		
SS METER		
SEWER STUB		
STORM DRAIN		
CATCH BASIN		
DRY WELL		
SD CLEAN OUT BOX		
FLARE END		
COMMUNICATION		
TELE. MANHOLE		
TELE. PEDESTAL		
TELE. POLE		
TV PEDESTAL		
CABLE TV		
DOMESTIC WATER		
FIRE HYDRANT		
SPIGOT		
WATER MANHOLE		
WATER METER		
WATER VALVE		
YARD HYDRANT		
ELECTRIC		
ELEC. MANHOLE		
ELEC. METER		
ELEC. TRANS.		
JUNCTION BOX		
GUY WIRE		
POWER STUB		
POWER/UTILITY POLE		
STREET LIGHT		
STREET LIGHT WITH ARM		
TRAFFIC SIGNAL POLE		

DESCRIPTION	EXIST.	PROP.
IRRIGATION		
IRRIGATION SHUT-OFF VALVE		
IRRIGATION CONTROL VALVE BOX		
IRRIGATION GATE		
NATURAL GAS		
GAS METER		
GAS VALVE		
GAS MANHOLE		
SITE		
BOLLARD		
BOULDER		
DRINKING FOUNTAIN		
FLAGPOLE		
GATE		
MAIL BOX		
PEDESTRIAN SIGNAL		
SCHOOL SIGN		
SIGN		
SPOT ELEVATION		
TREE (SHRUB)		
TREE		
TEST HOLE		
WELL		
WELL (MONITORING)		
CONCRETE FLATWORK		
ASPHALTIC CONCRETE		
SURVEY		
CAP		
CTRL PT		

LINE LEGEND

DESCRIPTION	EXISTING	PROPOSED
STORM DRAIN	SD	SD
SANITARY SEWER	SS	SS
WATER	W	W
IRRIGATION	IRR	IRR
NATURAL GAS	G	G
OVERHEAD POWER	OHE	OHE
UNDERGROUND POWER	E	E
OVERHEAD TELEPHONE	OHT	OHT
UNDERGROUND TELEPHONE	T	T
FIBER OPTIC	FO	FO
CABLE TELEVISION	CTV	CTV
FENCE		
MAJOR CONTOUR	4520	4520
MINOR CONTOUR		
TOP OF BANK	TOB	TOB
TOE OF SLOPE	TOE	TOE
PROPERTY LINE		
PROPERTY LINE (OPTIONAL)	P/L	P/L
RIGHT OF WAY	R/W	R/W
TEMPORARY EASEMENT	T/E	T/E
PERMANENT EASEMENT	P/E	P/E
ROAD CENTERLINE		
ROAD ASPHALT		
ROAD GRAVEL	EG	EG
CURB AND GUTTER		
ATMS	ATMS	ATMS
SAWCUT	SAW	SAW
GRADING FILL LIMIT	FILL	FILL
GRADING CUT LIMIT	CUT	CUT
DITCH/SWALE FLOWLINE		

COPPERTON UTAH

LEGEND AND SYMBOLS

STANDARD PLAN

100

SHEET 1 OF 1

REV. 2025-0

ABBREVIATIONS

ABBREV.	TERM
ALUM	ALUMINUM
APPROX.	APPROXIMATELY
ASSY	ASSEMBLY
∠	ANGLE
@	AT (MEASUREMENTS)
BC	BEGINNING OF CURVE
BFS	BEGIN FULL SUPER
BLDG	BUILDING
B.M.	BENCH MARK
BNC	BEGIN NORMAL CROWN
BNS	BEGIN NORMAL SHOULDER
BOA	BEGINNING OF ALIGNMENT
BP	BEGINNING OF PROFILE
BSC	BITUMINOUS SURFACE COURSE
BSW	BACK OF SIDEWALK
BVC	BEGIN VERTICAL CURVE
BVCE	BVC ELEVATION
BVCS	BVC STATION
B.W.	BOTH WAYS
C	CHANNEL (STRUCTURAL)
CJ	CONTROL JOINT
℄ or CL	CENTER LINE
CLR	CLEARANCE
CMP	CORRUGATED METAL PIPE
CO	CLEANOUT
CONC	CONCRETE
CONT	CONTINUOUS
CPLG	COUPLING
CTR	CENTER
CU FT	CUBIC FEET
CU YD	CUBIC YARD
DEG OR °	DEGREE
DET	DETAIL
DIA OR Ø	DIAMETER
D.I.P.	DUCTILE IRON PIPE
DIST	DISTRIBUTION
DWG	DRAWING
EA	EACH
EC	END OF CURVE
EFS	END FULL SUPER
ELB	ELBOW
ELEV OR EL.	ELEVATION
ENC	END NORMAL CROWN
ENS	END NORMAL SHOULDER
EOA	END OF ALIGNMENT
EP	END OF ALIGNMENT
E.W.	EACH WAY
EXIST	EXISTING
EVC	END VERTICAL CURVE
EVCE	EVC ELEVATION
EVCS	EVC STATION

ABBREVIATIONS

ABBREV.	TERM
FF	FINISH FLOOR
FG	FINISH GRADE
FH	FIRE HYDRANT
FL	FLOW LINE
FLG	FLANGE
FT OR '	FEET
FTG	FOOTING
GALV	GALVANIZED
GB	GRADE BREAK
GV	GATE VALVE
HORIZ	HORIZONTAL
HP	HIGH POINT
ID	INSIDE DIAMETER
IE	INVERT ELEVATION
IN. OR "	INCH
INV.	INVERT
K	CURVE COEFFICIENT
L	LEFT
LB	LINE BEGINNING
LB OR #	POUND
LF	LINEAL FEET
LN	LINEAL
LP	LOW POINT
MAX	MAXIMUM
MIN	MINIMUM
NO. OR #	NUMBER
O.C.	ON CENTER
OVERALL HP	OVERALL HIGH POINT
OVERALL LP	OVERALL LOW POINT
PC	POINT OF CURVATURE
PCC	POINT OF COMPOUND CURVATURE
PE	POLYETHYLENE
PI	TANGENT-TANGENT INTERSECT
PL OR ℞	PLATE OR PROPERTY LINE
PRC	POINT OF REVERSE CURVATURE
PT	END OF CURVE
PVC	POLYVINYL-CHLORIDE
PVI	POINT OF VERTICAL INTERSECTION
R	RADIUS OR RIGHT
R&R	REMOVE & REPLACE
RC	REVERSE CROWN
RCP	REINFORCED CONCRETE PIPE
REM	REMOVE
REQ'D	REQUIRED
REV	REVISION
R/W OR ROW	RIGHT-OF-WAY
S	SLOPE

ABBREVIATIONS

ABBREV.	TERM
SBO	SHOULDER BREAKOVER
SPEC	SPECIFICATION
STA	STATION
STD	STANDARD
STL	STEEL
ST STL	STAINLESS STEEL
TBC	TOP BACK OF CURB
TFC	TOP FACE OF CONCRETE
TOB	TOP OF BANK
TOC	TOP OF CONCRETE
TOF	TOP OF FOOTING
TOP	TOP OF PIPE
TOW	TOP OF WALL
TYP	TYPICAL
U.N.O.	UNLESS NOTED OTHERWISE
VCC	VERTICAL COMPOUND CURVE
VCCE	VCC ELEVATION
VCCS	VCC STATION
VRC	VERTICAL REVERSE CURVE
VRCE	VRC ELEVATION
VRCS	VRC STATION
W/	WITH
W/O	WITHOUT
W/REQ'D	WHERE REQUIRED

NOTES:

Materials, construction, and workmanship shall be in accordance with the current edition of "APWA Manual of Standard Specifications" addendums, and modifications thereto; and as directed by the MSD Public Works Engineer. Reference to specific sections of APWA does not limit requirements to that section.

SUBGRADE: See APWA Section 32 05 10 (Backfilling Roadways) for preparation and proof rolling of roadway, curb and gutter, and sidewalk.

UNTREATED BASE COURSE: Shall be Grade 1 as per APWA Section 32 11 23 (Aggregate Base Course). Place fill in no greater than 6 inch lifts after compaction as per APWA Section 32 05 10 (Backfilling Roadways). Compact to no less than 95% relative density based on the Modified Proctor Density as per APWA Section 31 23 26 (Compaction).

PRIME COAT: Prime coat, as directed by the engineer, on untreated base course before placing asphalt. See APWA Section 32 12 13.19 (Prime Coat).

TACK COAT: Grade SS-1, CSS-1, or CSS-1h emulsified asphalt shall be applied to existing asphalt concrete or portland cement concrete surfaces prior to placing asphalt concrete pavement as per APWA Section 32 12 13.13 (Tack Coat).

ASPHALT CONCRETE: Unless otherwise approved in writing by the MSD Public Works Engineer or their designated representative, all roads shall be considered Road Class III and the bituminous concrete mix designator used shall correspond to the table on Sheet 2. Minimum allowed roadway section – 3 inches asphalt concrete on 8 inches untreated base course. Thicker sections required for collectors, minor arterials, and roadways with heavy truck traffic. Construct road mix bituminous surface course only when air temperature in the shade and road bed temperature are greater than 50 degrees.

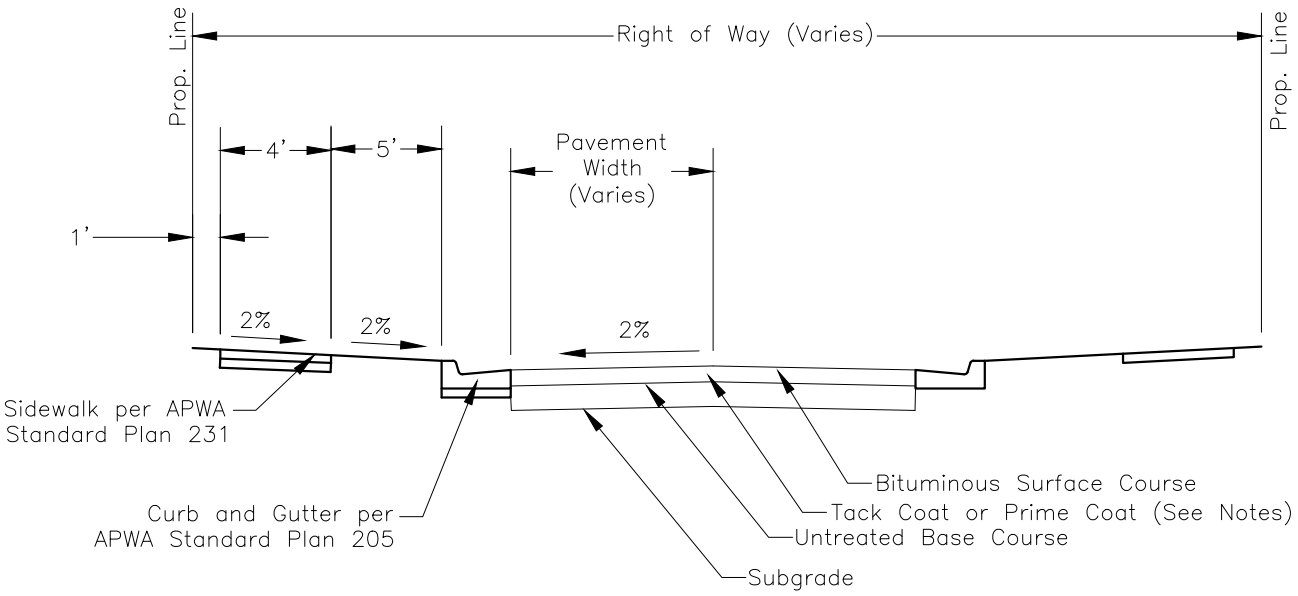

STANDARD CONFIGURATION

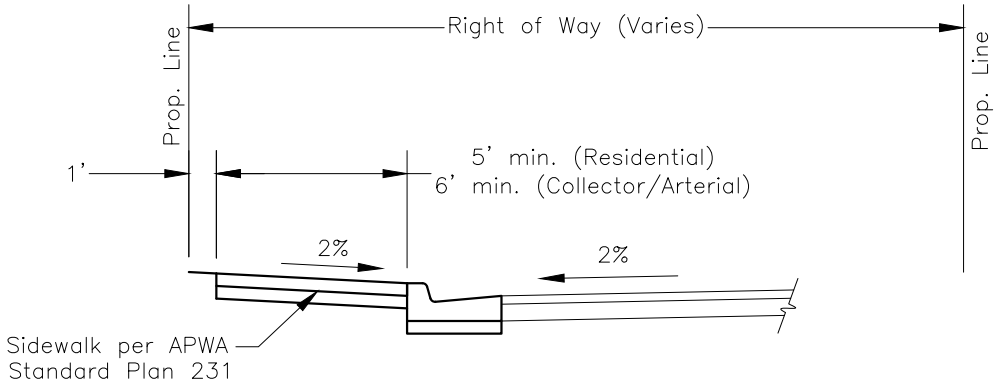

CONTIGUOUS SIDEWALK

BITUMINOUS CONCRETE MIX DESIGNATOR BY ROADWAY CLASSIFICATION	
ROADWAY CLASSIFICATIONS*	BITUMINOUS CONCRETE MIX DESIGN**
Local/Private – Collector (60')	PG58–28, DM–1/2, 50 Blow
Collector (80') – Arterial (106')	PG64–34, DM–1/2, 50 Blow
Canyon Roads Cat. 2–6	PG58–28, DM–1/2, 50 Blow
Canyon Roads Cat. 1	PG64–34, DM–1/2, 50 Blow

* See Section 14.12.100 of the municipal code for details.
** See APWA 32 12 05.

COPPERTON UTAH

ROADWAY SECTION

STANDARD PLAN 110

SHEET 2 OF 2

REV. 2025–0

NOTES:

These Standard Drawings are intended to supplement all ADA and APWA guidelines and requirements. These drawings are for clarification, but do not alter, reduce or override any Federal ADA requirements.

Materials, construction, and workmanship shall be in accordance with the current edition of "APWA Manual of Standard Specifications" addendums, and modifications thereto; and as directed by the MSD Engineer. Reference to specific sections of APWA does not limit requirements to that section.

SUBGRADE: See APWA Section 32 05 10 (Backfilling Roadways) for preparation and proof rolling of roadway, curb and gutter, and sidewalk.

UNTREATED BASE COURSE: Shall be Grade 1 as per APWA Section 32 11 23 (Crushed Aggregate Base). Place fill in no greater than 6 inch lifts as per APWA Section 32 05 10 (Backfilling Roadways). Compact to no less than 95% relative density based on the Modified Proctor Density as required in APWA Section 31 23 26 (Compaction).

CONCRETE: Concrete shall be Class 4000 as per APWA 03 30 04 (Concrete).

EXPANSION JOINT: Expansion joint shall be 1/2" thick preformed expansion joint filler F1–bituminous mastic as per APWA Section 32 13 73 (Concrete Paving Joint Sealants) at each interface as shown.

DETECTABLE WARNINGS: Locate raised truncated domes so that the edge nearest the curb line is within 6 to 8 inches from the curb line excluding Curb Ramp Types H, and I where $X < 5$ feet (see sheet 6 of 6). Provide 2–foot of truncated dome pattern at the lower end of all curb ramps extending the full width of the curb ramp. See typical dimensions on Type B Curb Ramp. Detectable warnings shall contrast visually with adjoining surfaces, either light–on–dark, or dark–on–light. Glued or surface applied domes are not acceptable for new construction. Stamped domes are not allowed under any conditions. Truncated dome materials shall be selected from the MSD approved materials list.

RAMPS: Length of any ramp not to exceed 15 feet.
Ramp shown are examples only, site specific ramps may require modification and additional features to comply with current Federal ADA Guidelines.

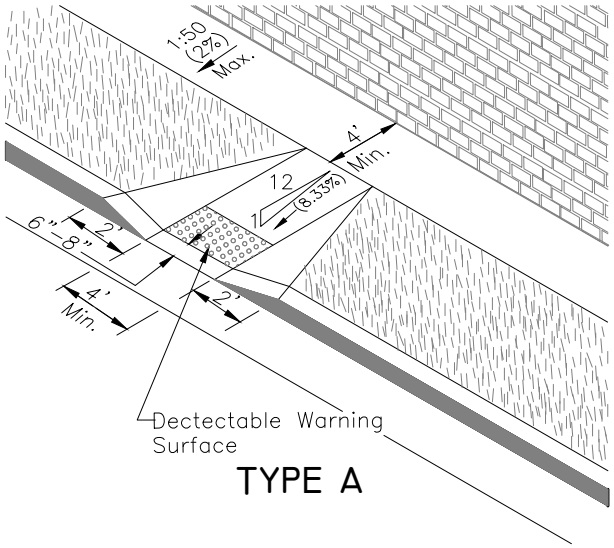

TYPE A

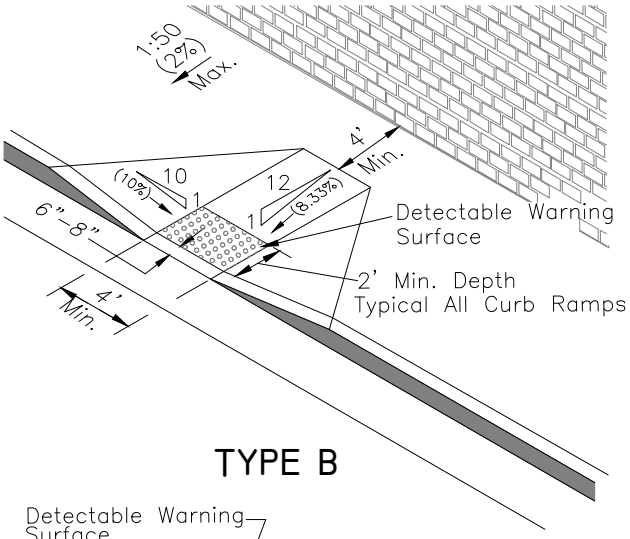

TYPE B

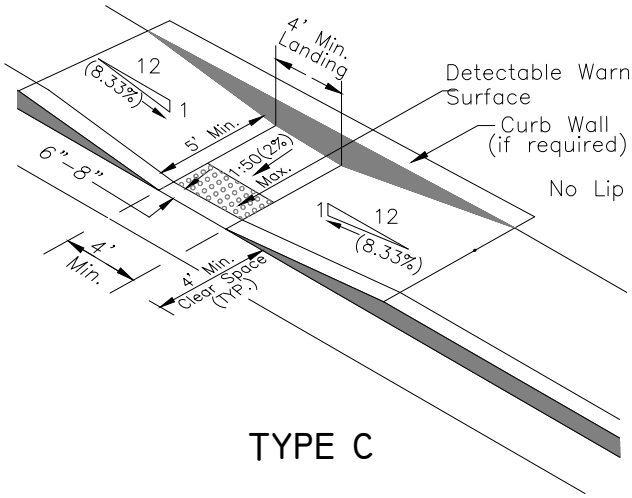

TYPE C

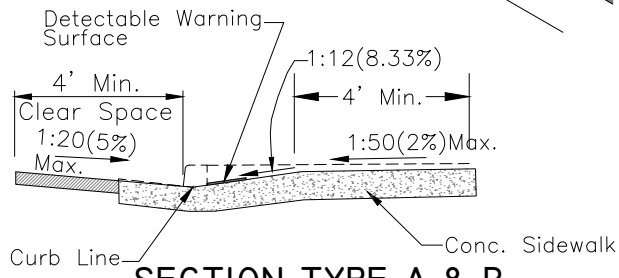

SECTION TYPE A & B

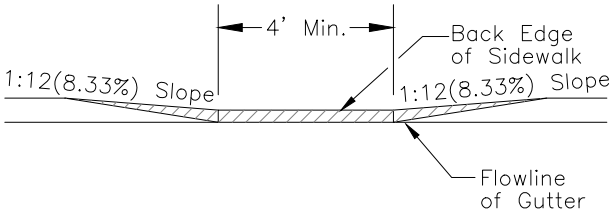

ELEVATION TYPE C

NOTES:

1. TYPE A
   The entire ramp slope is achieved outside the sidewalk section. A concrete warped curb section shall begin 2' from edge of detectable warning surface.
2. TYPE B
   Provide at least 4' of sidewalk width beyond the ramp.
3. TYPE C
   Use this type of ramp when there is insufficient width to accomodate TYPE B curb ramp.
4. No pull box, utility vault, utility pole, manhole or similar appurtenance shall be located within the sidewalk ramp area.
5. It is desirable to locate all drain inlets out of sidewalk ramp area. Use of drain inlet within ramp area requires special design of inlets.
6. See Detail 'A' (sheet 4 of 6) for raised truncated dome detail on detectable warning surface.
7. Maximum cross slope of adjoining gutters and road surface immediately adjacent to the curb ramp, or accessible route, shall not exceed 1:20(5%).
8. Running and cross slope at midblock crossings shall be permitted to be warped to meet street or highway grade.

est. 1926 COPPERTON UTAH	CURB RAMPS	STANDARD PLAN 135 SHEET 2 OF 6

REV. 2025-0

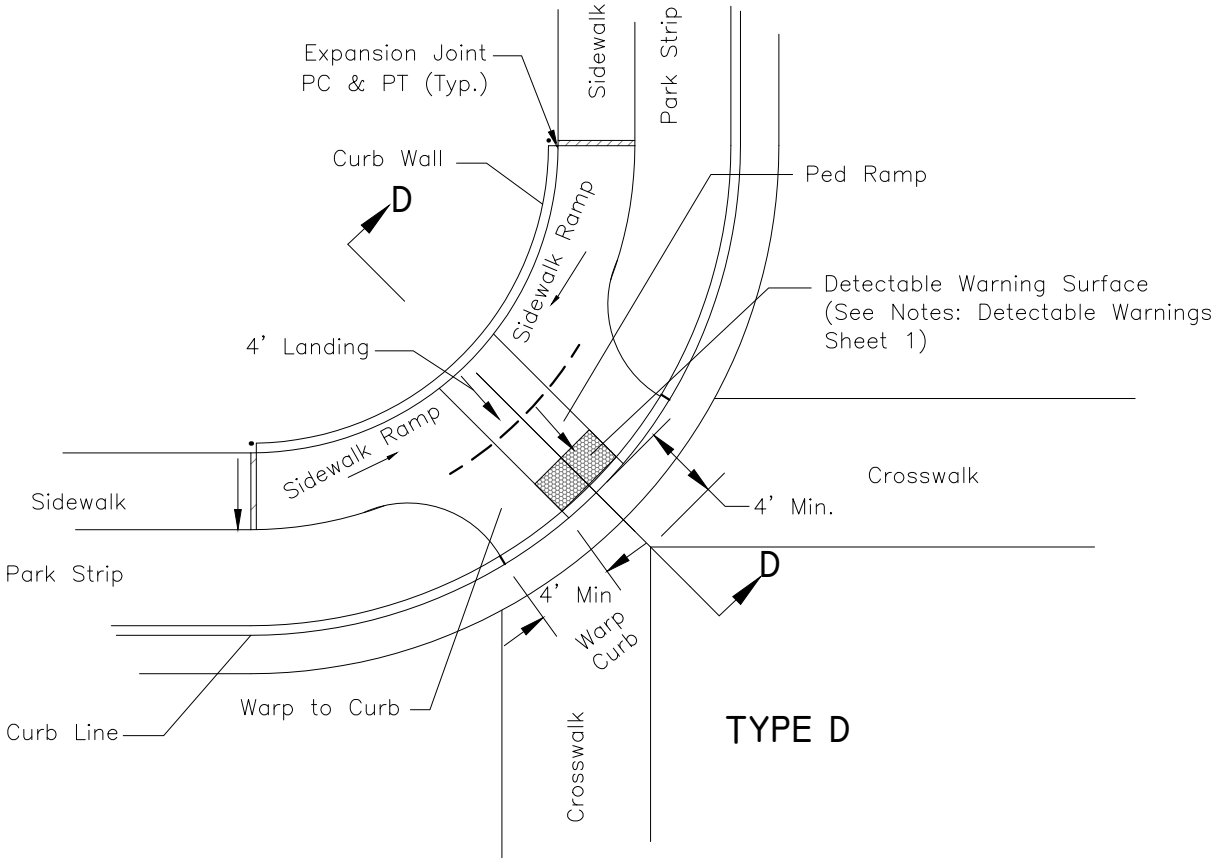

TYPE D

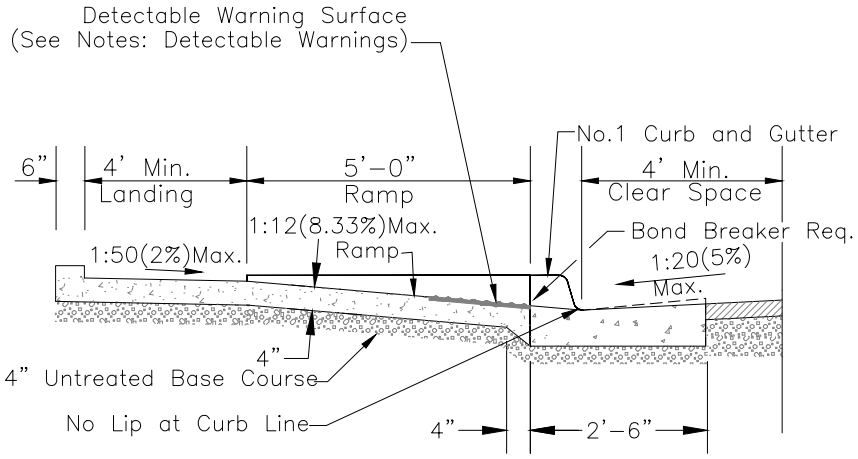

SECTION D-D

NOTES:

Landing: Cross Slope: 1:50(2%) Max. Towards The Street.

Ped Ramp Slope: 1:12(8.3%) Max.

Sidewalk Ramp: 1" Rise Reauired Length May Vary
Slope May Vary, But 1:12(8.3%) Max.

Sidewalk: Cross Slope 1:50(2%) Max. Towards
The Street.

Curb Wall: 6" Wide As Needed.

COPPERTON UTAH	CURB RAMPS	STANDARD PLAN 135 SHEET 3 OF 6

REV. 2025-0

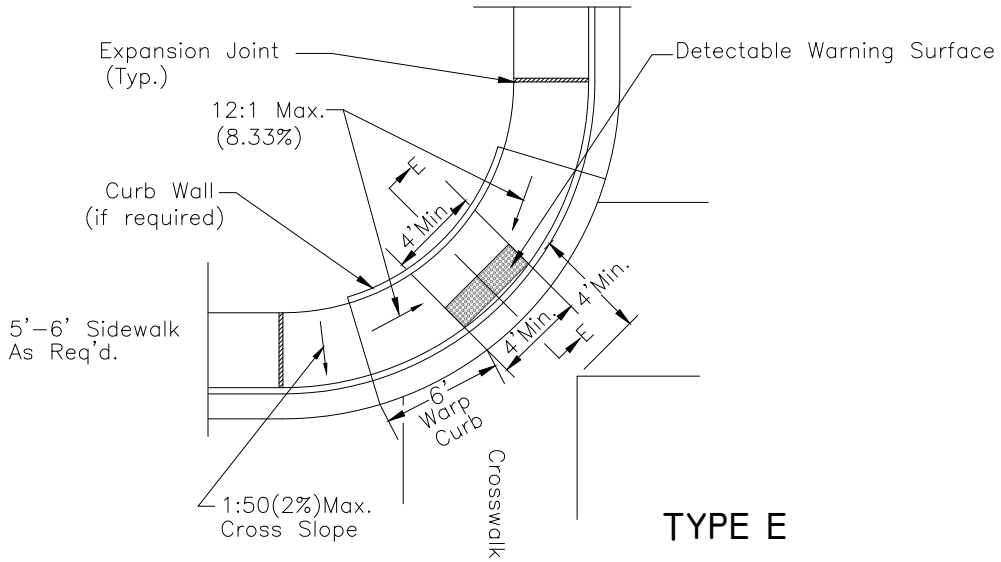

TYPE E

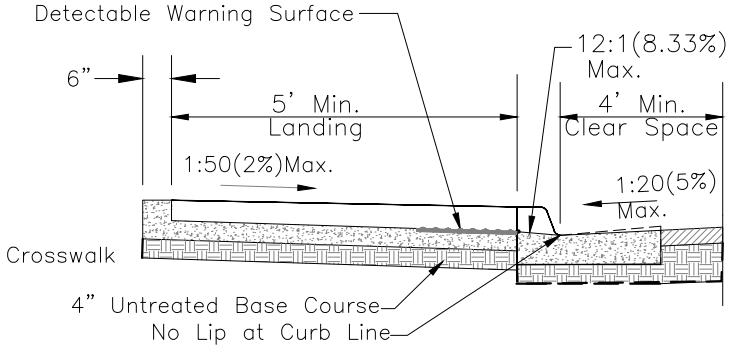

SECTION E-E

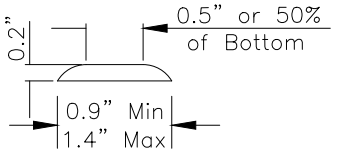

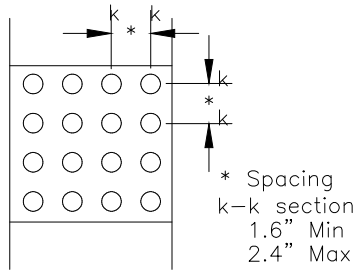

Raised Truncated Domes
of Detectable Warning Surface

DETAIL 'A'

COPPERTON UTAH	CURB RAMPS	STANDARD PLAN 135 SHEET 4 OF 6

REV. 2025-0

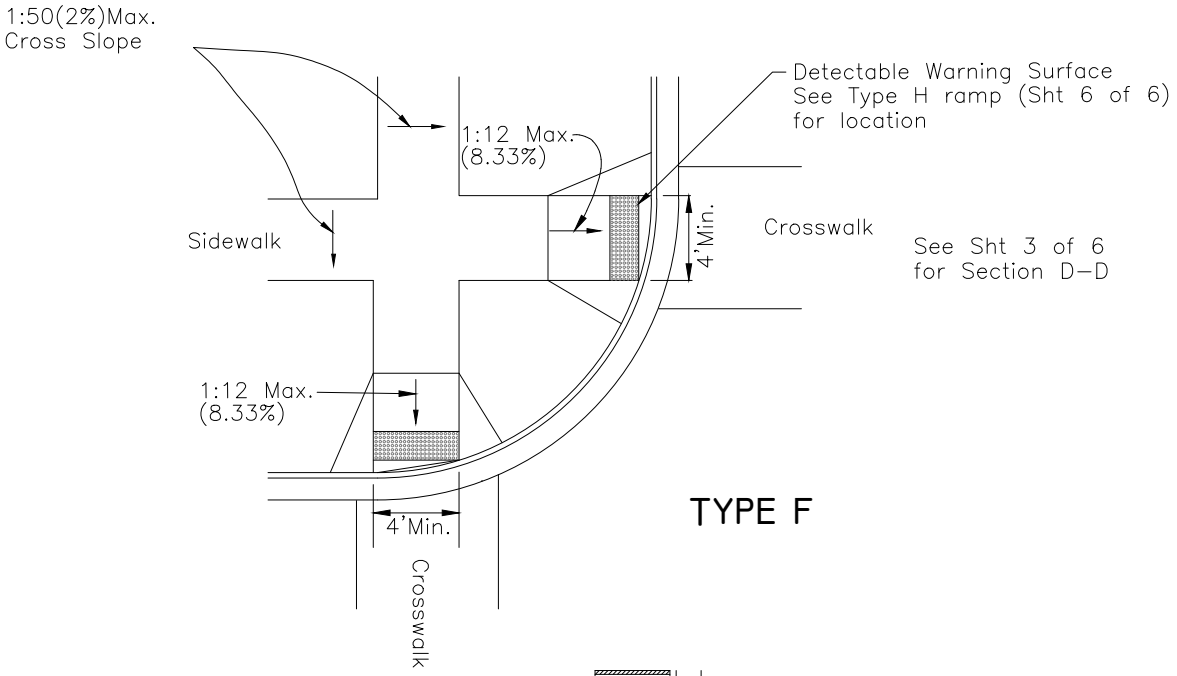

TYPE F

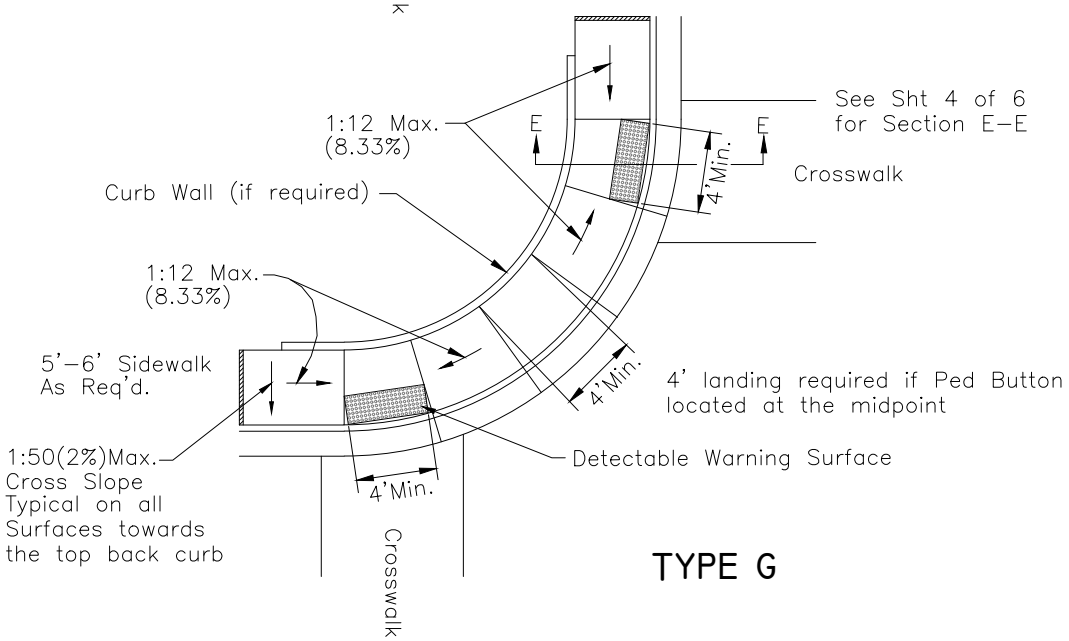

TYPE G

NOTES:

1. Provide detectable warning surface for full width of ramp, min. 4' width.
2. Detectable warning surface is required wherever curb is absent.
3. When detectable warning surface is cut, grind remaining portion of any cut domes. Seal all cut panel edges to prevent water damage.
4. Locate curb cut within crosswalk.

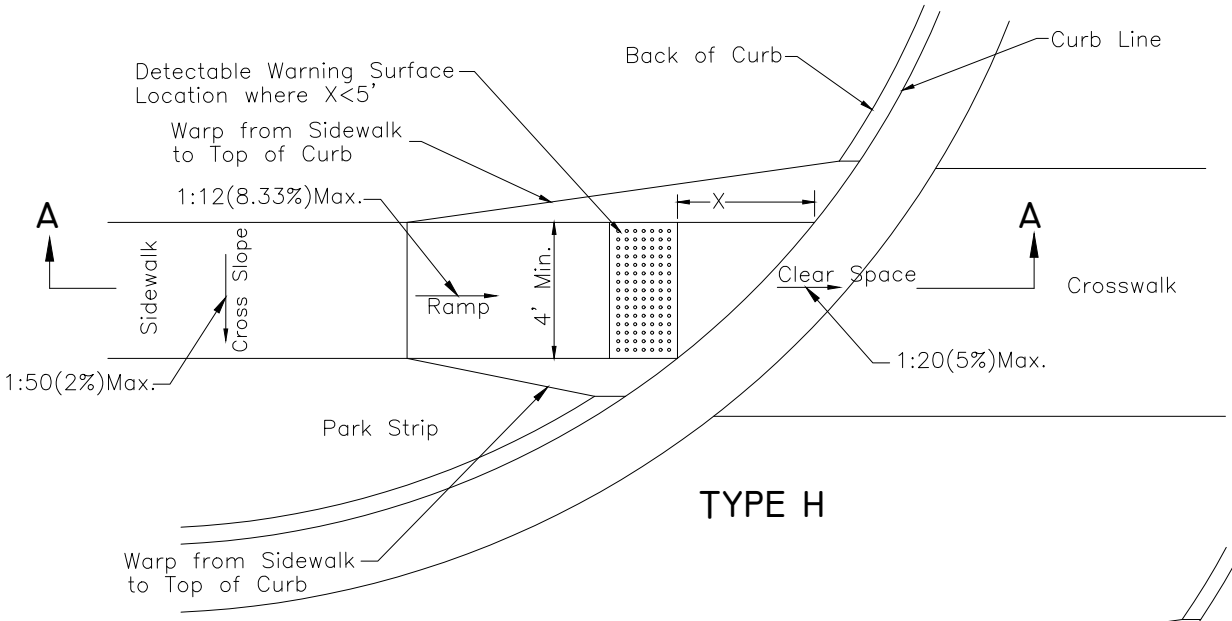

TYPE H

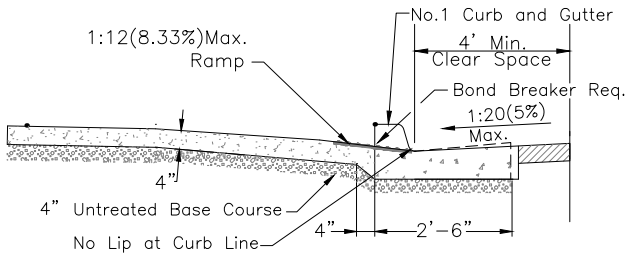

SECTION A-A

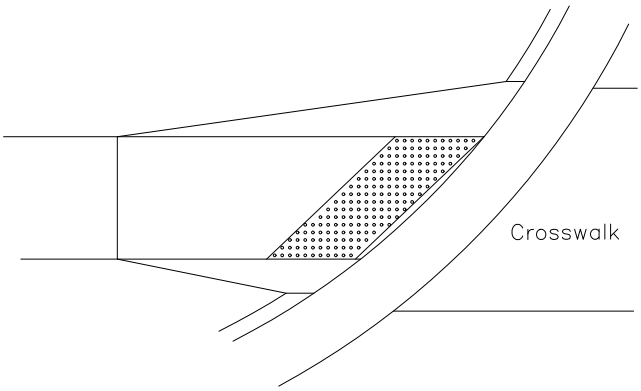

REQUIRED DETECTABLE WARNING SURFACE
LOCATION WHERE X>5' FOR TYPE H & TYPE J

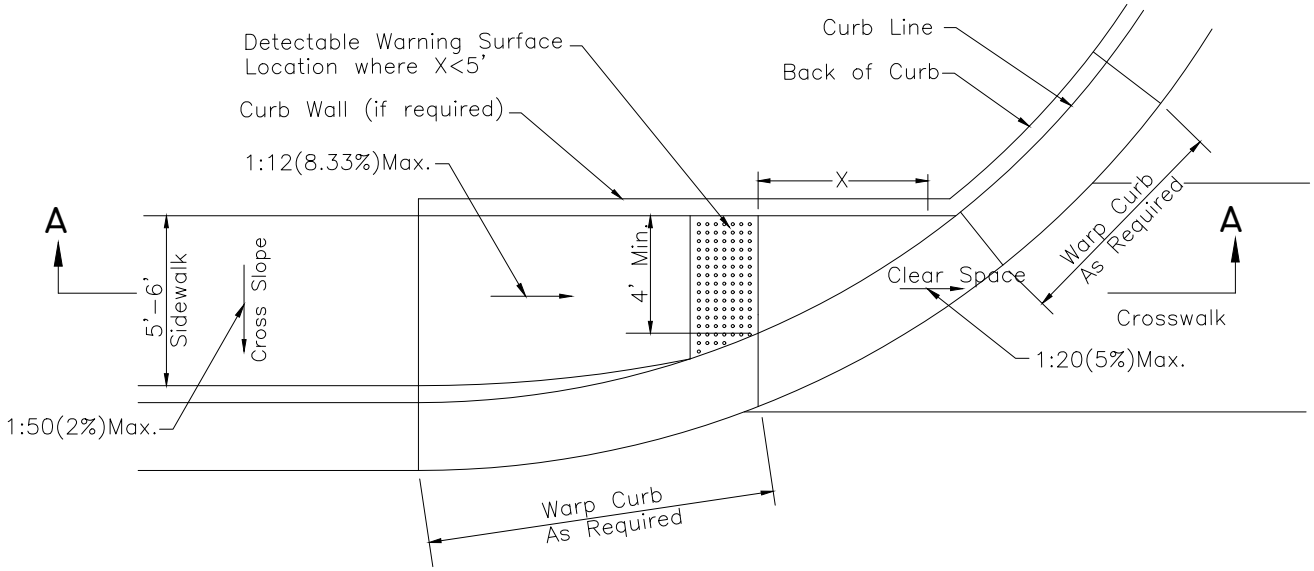

TYPE J

COPPERTON UTAH	CURB RAMPS	STANDARD PLAN 135 SHEET 6 OF 6

REV. 2025-0

NOTES:

1. Get ENGINEER's approval of sign format and installation.
2. Bolts, Nuts, Washers, Accessories: Stainless or galvanized steel, APWA Section 05 05 23.
3. Install sign posts on corner selected by ENGINEER.
4. Install the edge of the sign 2 feet from the vertical extension of the back of curb as near as possible to the approach curb P.C. (point of curvature).

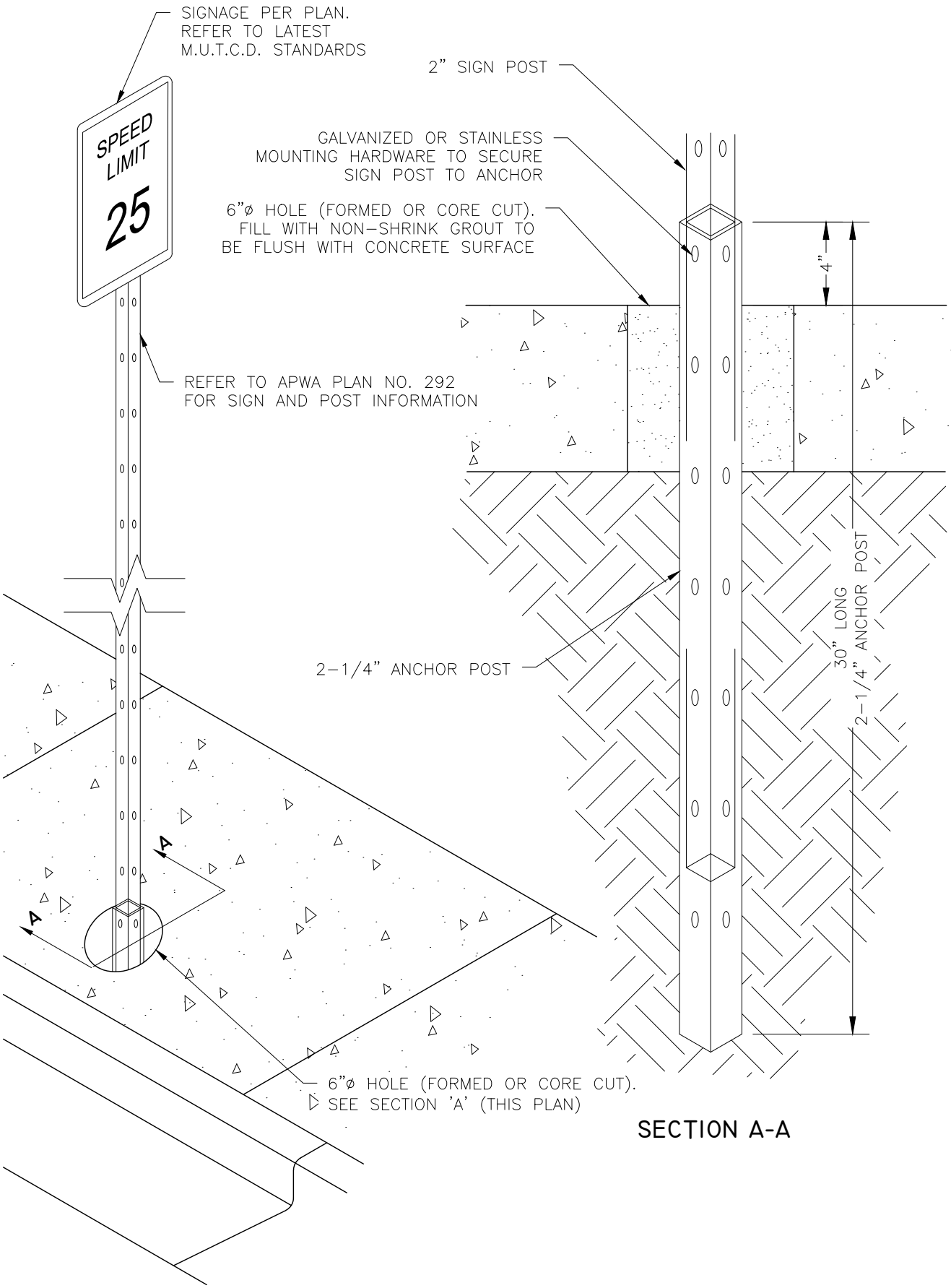

COPPERTON UTAH

SIGN POST IN CONCRETE DETAIL

STANDARD PLAN
140
SHEET 2 OF 2

REV. 2025-0

NOTES:

1. This detail has been developed to provide a location for utilities when sidewalk is placed contiguous with curb and gutter.

2. Minimum sidewalk clear width adjacent to obstruction shall be 4' unless otherwise approved by the MSD Engineer. Verify with the engineer that the appropriate right-of-way width exists where sidewalk must be widened around an obstruction.

3. Brick-stamped and colored concrete areas shall match the thickness of concrete and base course of the adjacent sidewalk.

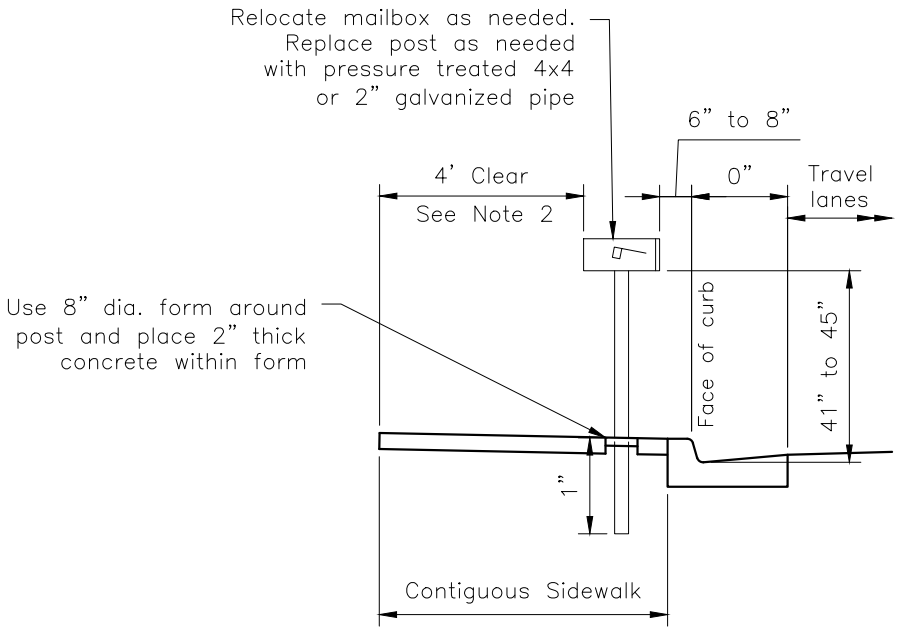

MAILBOX RELOCATION

COPPERTON UTAH	SIDEWALK OBSTRUCTION DETAIL	STANDARD PLAN 150 SHEET 1 OF 2

REV. 2025-0

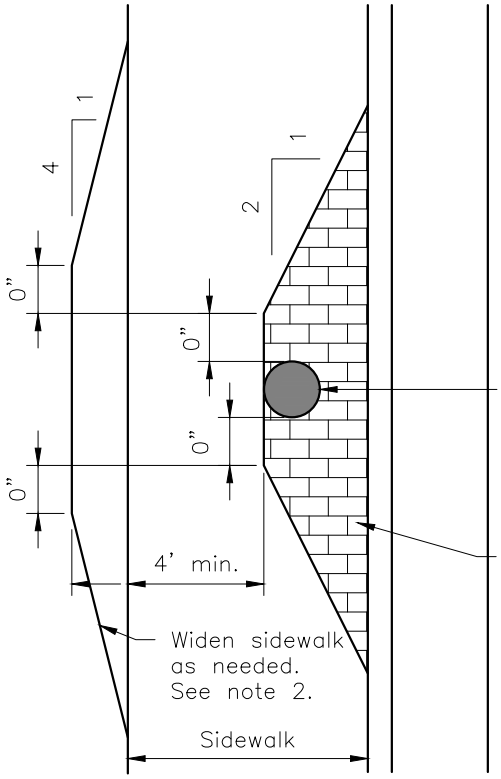

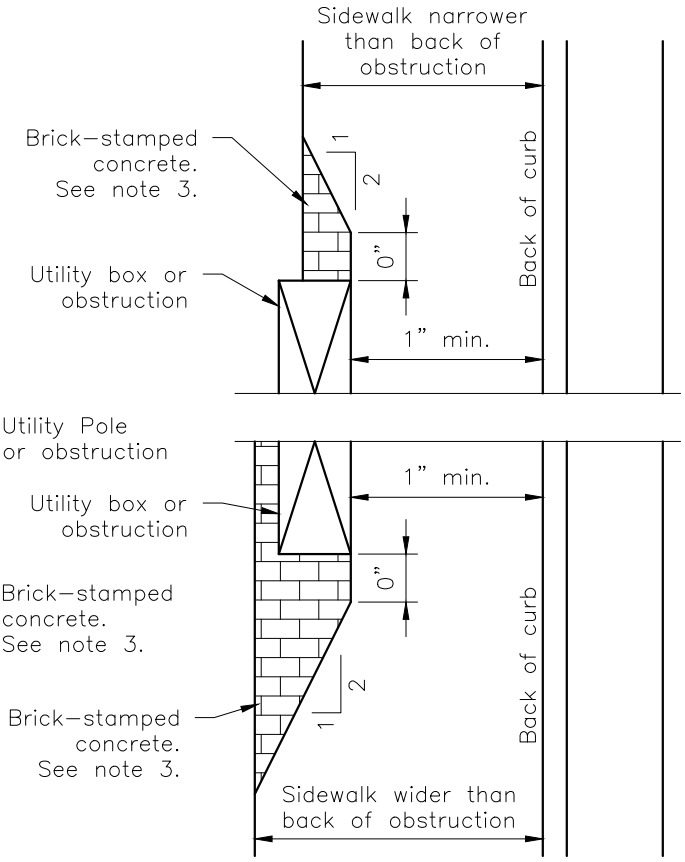

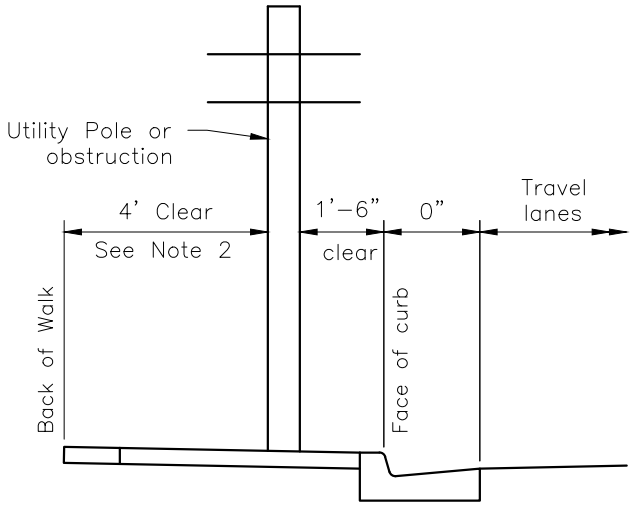

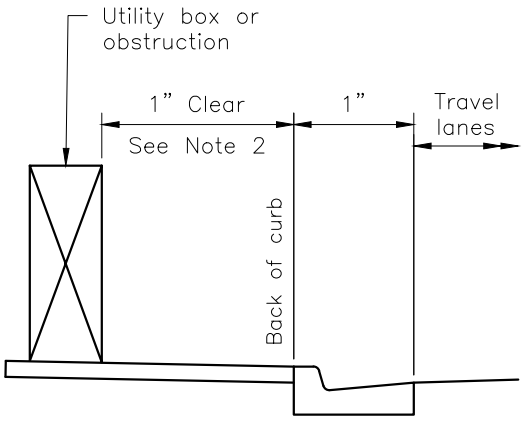

CURB-SIDE OBSTRUCTION

BACK-OF-WALK OBSTRUCTION

COPPERTON UTAH

SIDEWALK OBSTRUCTION DETAIL

STANDARD PLAN

150

SHEET 2 OF 2

REV. 2025-0

NOTES:

1. Concrete is considered defective if any component has one or more of the conditions shown on sheet 2. The MSD may require section replacement for any latent defects not described.

2. Defective concrete resulting from an individual crack is defined as having at least one of the following:
   - horizontal separation wide enough to insert a dime
   - vertical displacement resulting from crack
   - spalling, spidering, or chipping of crack

3. Defective concrete resulting from multiple cracks is defined as having at least one of the following:
   - one section with multiple cracks where both ends of crack link with slab edge, joint, or another crack.
   - adjacent sections with one or more cracks where both ends of crack link with slab edge, joint, or another crack.

4. Defective concrete resulting from vertical displacement is defined as one of the following:
   - at time of performance bond release: any vertical displacement at construction joint or expansion joint.
   - concrete not under warranty: vertical displacement at construction joint or expansion joint greater than $\frac{1}{4}$".

5. Defective concrete resulting from spalls is defined as one of the following:
   - at time of performance bond release: any spalling.
   - concrete not under warranty: spalling covering more than 20% of a section.

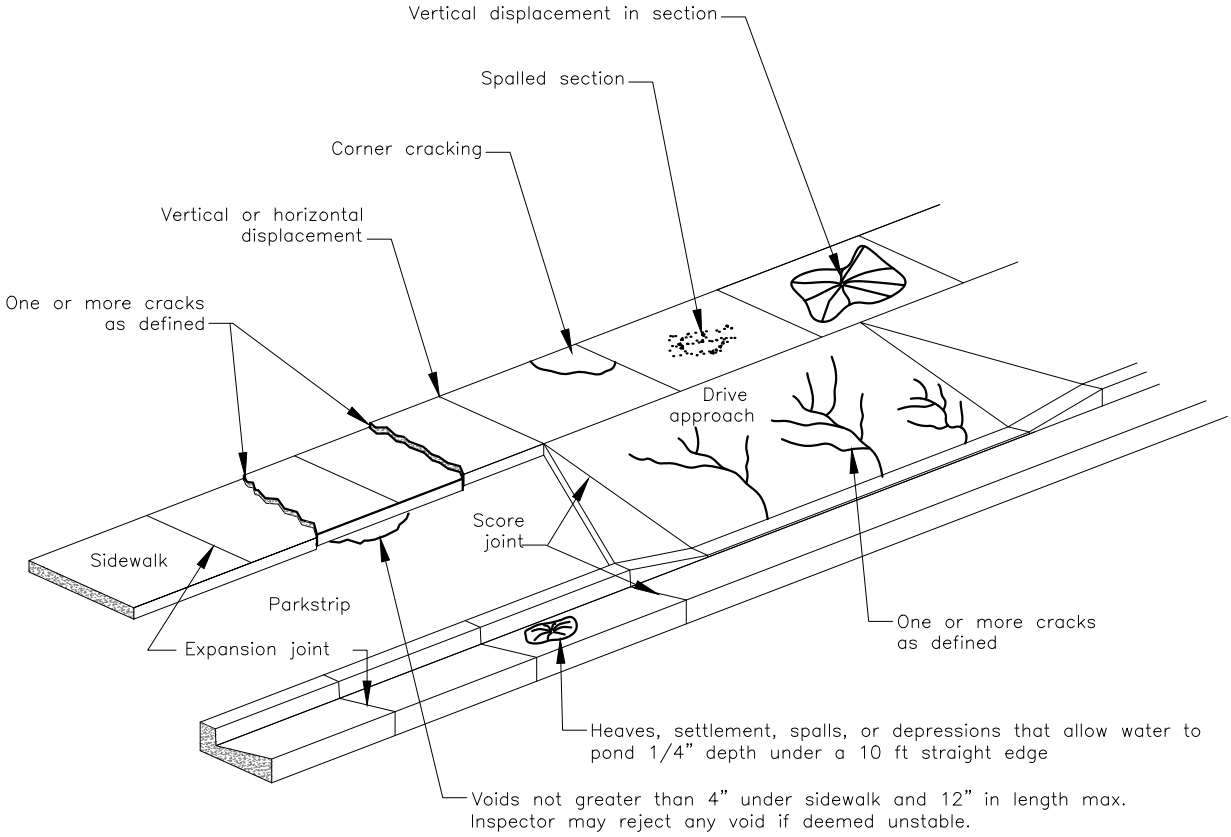

COPPERTON UTAH

DEFECTIVE CONCRETE

STANDARD PLAN

155

SHEET 2 OF 2

REV. 2025-0

ASSEMBLY COLOR: BLACK

Mountain States Lighting
609 Krista Court
Murray, Utah 84123
Phone 801-268-4879
Fax 801-605-9058

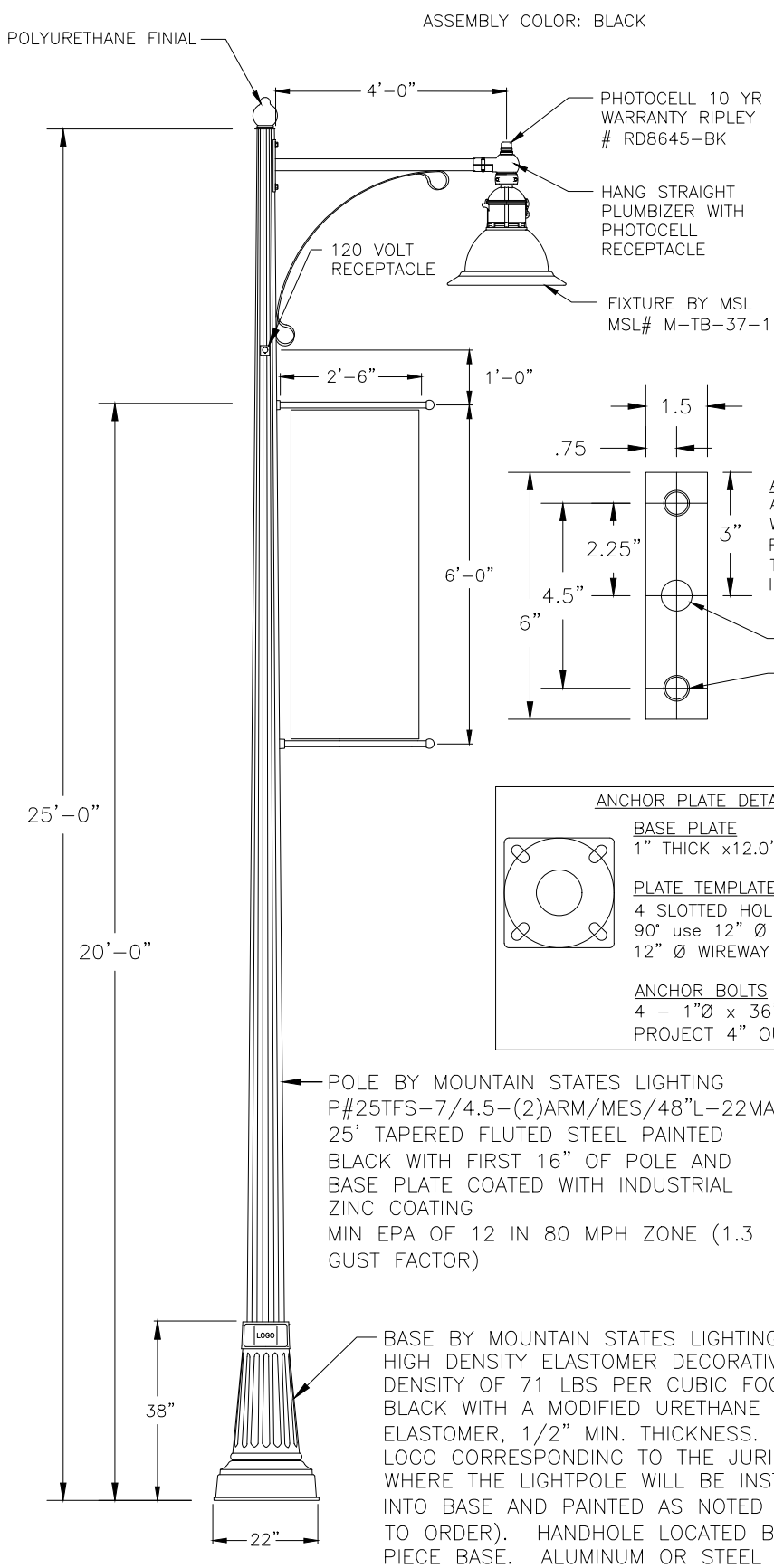

FIXTURE SPECIFICATIONS

CATALOG NO.:	MSL# M-TB-37-1
OPTICAL SYSTEM:	FLAT ARRAY W GLOBE
IES CLASS.:	TYPE III
INPUT WATTAGE:	150W
SERIES:	SOLID STATE LIGHTING
CCT:	3000K
LINE VOLTAGE:	120:277V
PAINT:	TEXTURED BLACK
INCLUDES:	TERMINAL BLOCK WATTAGE SWITCH

ARM MOUNT DETAIL
ARM MOUNT PLATE WELDED ON ARM SIDE WITH WIRE HOLE CENTERED 6" DOWN FROM TOP OF POLE. PLATES ARE 1" THICK STEEL. ONE COVER PLATE IS INCLUDED FOR SINGLE ARM APPLICATIONS

¾" DIAMETER WIRE ACCESS HOLE

⅝" x 11 UNC THREADED HOLE – 2 PLCS

ANCHOR PLATE DETAIL

BASE PLATE
1" THICK x12.0" x 12.0" (Steel)

PLATE TEMPLATE
4 SLOTTED HOLES (1 $\frac{1}{8}$" x 2$\frac{1}{4}$")
90° use 12" Ø BOLT CIRCLE
12" Ø WIREWAY (CNTR'D.)

ANCHOR BOLTS
4 – 1"Ø x 36" LONG HEADED BOLT
PROJECT 4" OUT OF CONC.

POLE BY MOUNTAIN STATES LIGHTING
P#25TFS-7/4.5-(2)ARM/MES/48"L-22MAD(NAME)BK
25' TAPERED FLUTED STEEL PAINTED BLACK WITH FIRST 16" OF POLE AND BASE PLATE COATED WITH INDUSTRIAL ZINC COATING
MIN EPA OF 12 IN 80 MPH ZONE (1.3 GUST FACTOR)

BASE BY MOUNTAIN STATES LIGHTING
HIGH DENSITY ELASTOMER DECORATIVE BASE, DENSITY OF 71 LBS PER CUBIC FOOT. PAINTED BLACK WITH A MODIFIED URETHANE COATING. ELASTOMER, 1/2" MIN. THICKNESS. ENGRAVED LOGO CORRESPONDING TO THE JURISDICTION WHERE THE LIGHTPOLE WILL BE INSTALLED CAST INTO BASE AND PAINTED AS NOTED (VERIFY PRIOR TO ORDER). HANDHOLE LOCATED BEHIND TWO PIECE BASE. ALUMINUM OR STEEL NOT ACCEPTED

COPPERTON UTAH

ARTERIAL LED STREET LIGHT

STANDARD PLAN
160
SHEET 1 OF 2

REV. 2025-0

NOTES:

1. SEE STANDARD DRAWING 150 IN THIS DOCUMENT FOR PLACEMENT IN CONTIGUOUS SIDEWALK.
2. FOUNDATION DETAILS CAN VARY FROM THOSE SHOWN HERE WITH A SITE SPECIFIC FOUNDATION DESIGN THAT HAS BEEN REVIEWED AND APPROVED BY MSD ENGINEER.

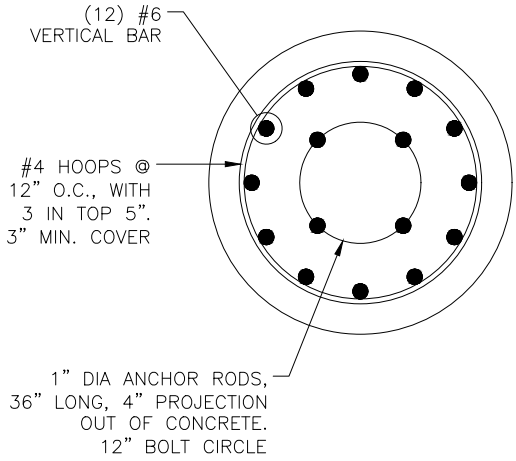

SECTION A–A

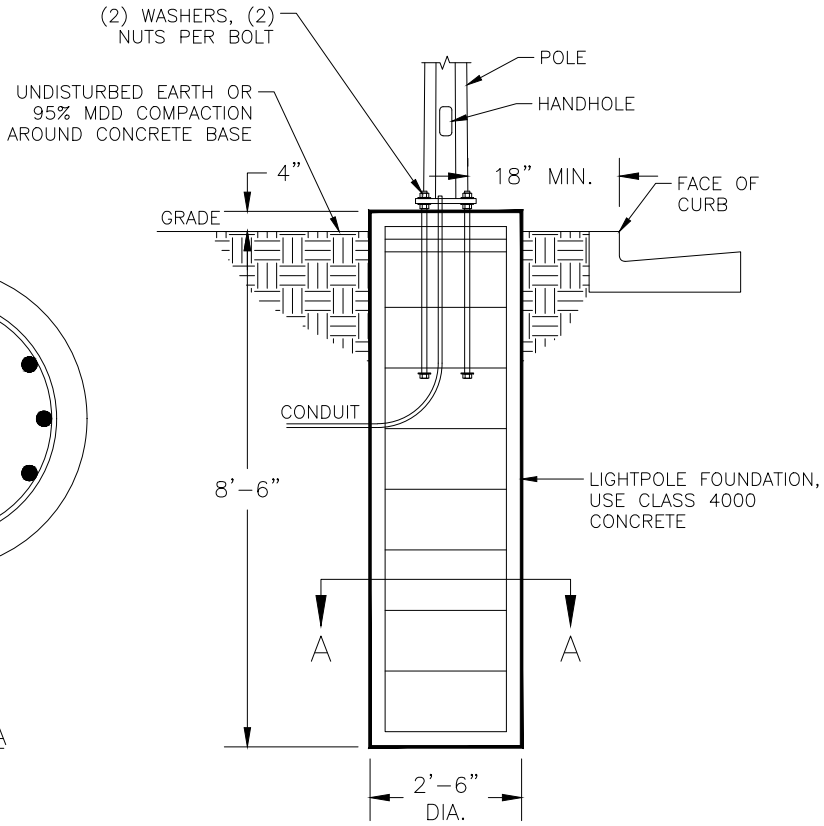

FOUNDATION DETAILS

COPPERTON UTAH	ARTERIAL LED STREET LIGHT	STANDARD PLAN 160 SHEET 2 OF 2

REV. 2025–0

Mountain States Lighting
609 Krista Court
Murray, Utah 84123
Phone 801-268-4879
Fax 801-605-9058

ASSEMBLY COLOR: BLACK

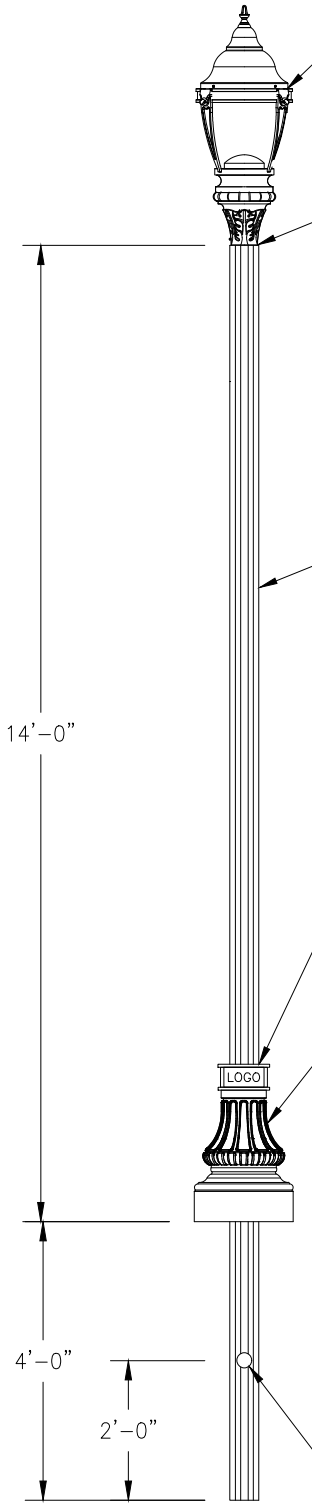

LED FIXTURE (7 YEAR WARRANTY)
MOUNTAIN STATES LIGHTING
#MSLK137R-III-75-120/277

TENON
3" x 3" TALL

FIXTURE SPECIFICATIONS:

CATALOG NO.:	K137R-P4NG-III-75(SSL)-7030-120:277-K14-PR7-4K-TB-1-WS
OPTICAL SYSTEM:	FLAT ARRAY
IES CLASS.:	TYPE III
INPUT WATTAGE:	75W
SERIES:	SOLID STATE LIGHTING
CCT:	4000K
LINE VOLTAGE:	120:277V
POLE ADAPTOR:	K14
PAINT:	BLACK

POLE SPECIFICATIONS: 10 YEAR STRUCTURAL WARRANTY
18' EXTRUDED ALUMINUM POLE PAINTED WITH THE FIRST 54" COATED WITH COLD TAR EPOXY
POLE HEIGHT: 18'/14' EXTRUDED ALUMINUM
TOTAL POLE: 5" O.D., THICKNESS: 0.250"
EPA: MIN 20 IN 80 MPH ZONE (1.3 GUST FACTOR)
BASE: DECORATIVE ELASTOMER – AVERAGE 3/4" THICK (50 LBS)

3" x 7" HANDHOLE LOCATED
BEHIND 2-PIECE BASE

DECORATIVE BASE BY MOUNTAIN STATES LIGHTING #NW-17"WX23"H-HDEB(LOGO)-BK HIGH DENSITY ELASTOMER WITH DENSITY OF 71 LBS PER CUBIC FOOT. PAINTED BLACK WITH A MODIFIED URETHANE COATING (STAYS FLEXIBLE OVER TIME W/MAX ADHESION). ENGRAVED LOGO CORRESPONDING TO THE JURISDICTION WHERE THE LIGHTPOLE WILL BE INSTALLED CAST INTO BASE. BASE TO BE AN AVERAGE OF $\frac{5}{8}$" THICK AND PAINTED AS NOTED (VERIFY PRIOR TO ORDER). 10 YEAR STRUCTURAL WARRANTY. ALUMINUM, STEEL, OR CAST IRON IS NOT ACCEPTABLE

2" DIAMETER CONDUIT
ENTRY HOLE

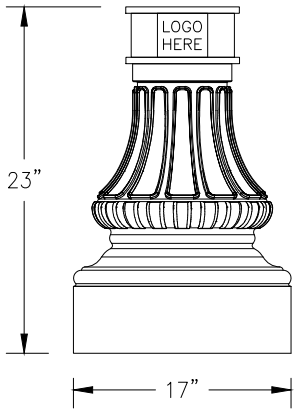

DECORATIVE BASE DETAIL

COPPERTON UTAH est. 1926

COLLECTOR LED STREET LIGHT

STANDARD PLAN
161
SHEET 1 OF 2

REV. 2025-0

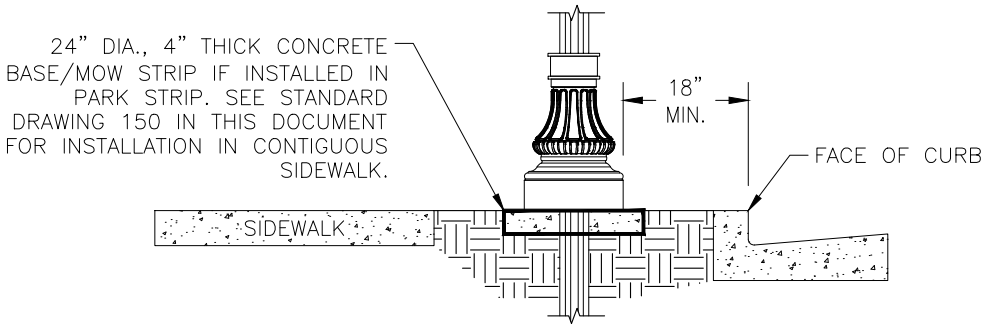

INSTALLATION DETAILS

COPPERTON UTAH

COLLECTOR LED STREET LIGHT

STANDARD PLAN

161

SHEET 2 OF 2

REV. 2025-0

ASSEMBLY COLOR: BLACK

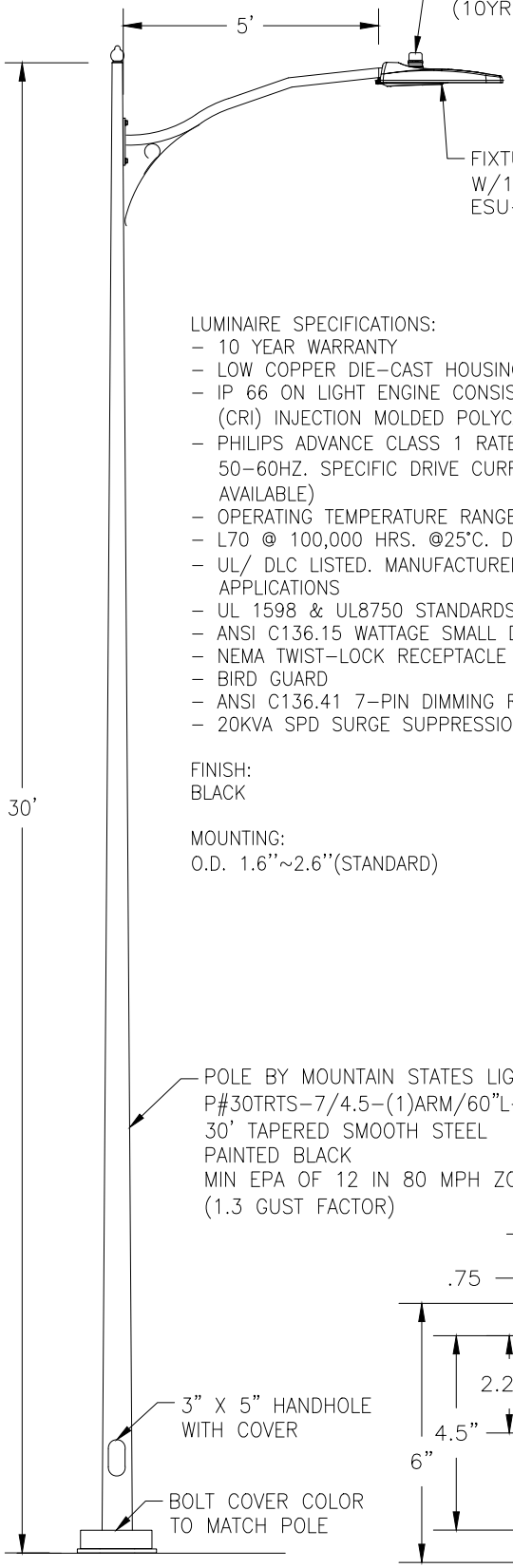

Mountain States Lighting
609 Krista Court
Murray, Utah 84123
Phone 801-268-4879
Fax 801-605-9058

LUMINAIRE SPECIFICATIONS:
- 10 YEAR WARRANTY
- LOW COPPER DIE-CAST HOUSING & POWER DOORS. 3,000 HOURS SALT SPRAY TO ASTM D1654-08
- IP 66 ON LIGHT ENGINE CONSISTING OF 4000K CREE XP-G3 LEDS, >70 COLOR RENDERING INDEX (CRI) INJECTION MOLDED POLYCARBONATE OPTICS LENS EMBOSSED WITH THE LIGHT DISTRIBUTION TYPE
- PHILIPS ADVANCE CLASS 1 RATED DIMMING LED DRIVER DRIVER OPERATES 120~277VAC(STANDARD), 50-60HZ. SPECIFIC DRIVE CURRENT >90% POWER FACTOR, <20% THD. (480V INPUT VOLTAGE AVAILABLE)
- OPERATING TEMPERATURE RANGE IS -40°F TO +130°F
- L70 @ 100,000 HRS. @25°C. DRIVER 100,000 HRS <65°F
- UL/ DLC LISTED. MANUFACTURED IN U.S.A. ROHS, VIBRATION TESTED TO ANSI 136.31 FOR BRIDGE APPLICATIONS
- UL 1598 & UL8750 STANDARDS
- ANSI C136.15 WATTAGE SMALL DECAL
- NEMA TWIST-LOCK RECEPTACLE
- BIRD GUARD
- ANSI C136.41 7-PIN DIMMING RECEPTACLE
- 20KVA SPD SURGE SUPPRESSION

FINISH:
BLACK

MOUNTING:
O.D. 1.6"~2.6"(STANDARD)

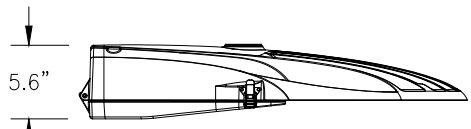

SIDE VIEW

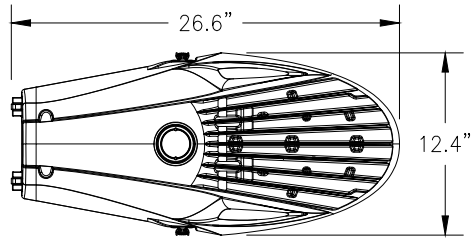

TOP VIEW

ROADWAY LED FIXTURE DETAIL

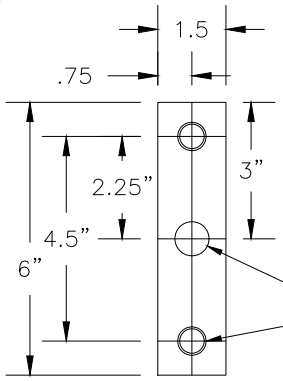

ARM MOUNT DETAIL

ARM MOUNT PLATE WELDED ON ARM SIDE WITH WIRE HOLE CENTERED 6" DOWN FROM TOP OF POLE. PLATES ARE 1" THICK STEEL. ONE COVER PLATE IS INCLUDED FOR SINGLE ARM APPLICATIONS

¾" DIAMETER WIRE ACCESS HOLE

⅝" x 11 UNC THREADED HOLE - 2 PLCS

COPPERTON UTAH

INDUSTRIAL LED STREET LIGHT

STANDARD PLAN
162
SHEET 1 OF 2

REV. 2025-0

NOTES:

1. SEE STANDARD DRAWING 150 IN THIS DOCUMENT FOR PLACEMENT IN CONTIGUOUS SIDEWALK.
2. FOUNDATION DETAILS CAN VARY FROM THOSE SHOWN HERE WITH A SITE SPECIFIC FOUNDATION DESIGN THAT HAS BEEN REVIEWED AND APPROVED BY MSD ENGINEERING.

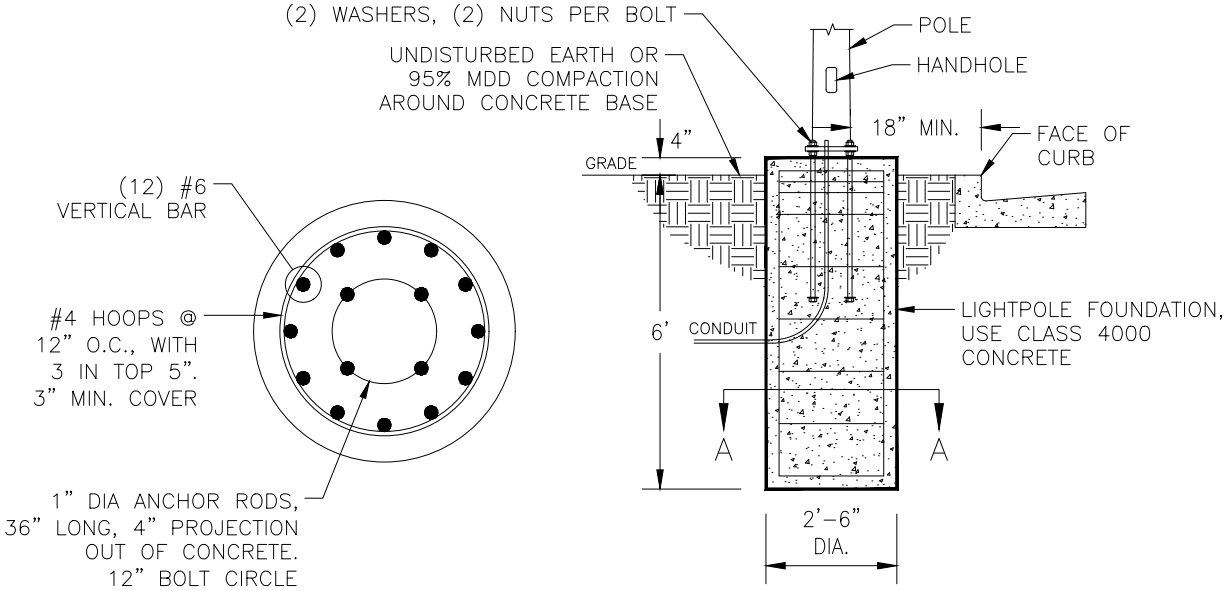

SECTION A–A

30' INDUSTRIAL POLE FOUNDATION DETAILS

ANCHOR PLATE DETAIL

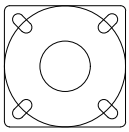

BASE PLATE
1" THICK x12.0" x 12.0" (Steel)

PLATE TEMPLATE
4 SLOTTED HOLES (1⅛" x 2¼")
90° use 12" Ø BOLT CIRCLE
12" Ø WIREWAY (CNTR'D.)

ANCHOR BOLTS
4 – 1"Ø x 36" LONG HEADED BOLT
PROJECT 4" OUT OF CONC.

est. 1926 COPPERTON UTAH	INDUSTRIAL LED STREET LIGHT	STANDARD PLAN 162 SHEET 2 OF 2

REV. 2025-0

ASSEMBLY COLOR: BLACK

Mountain States Lighting
609 Krista Court
Murray, Utah 84123
Phone 801-268-4879
Fax 801-605-9058

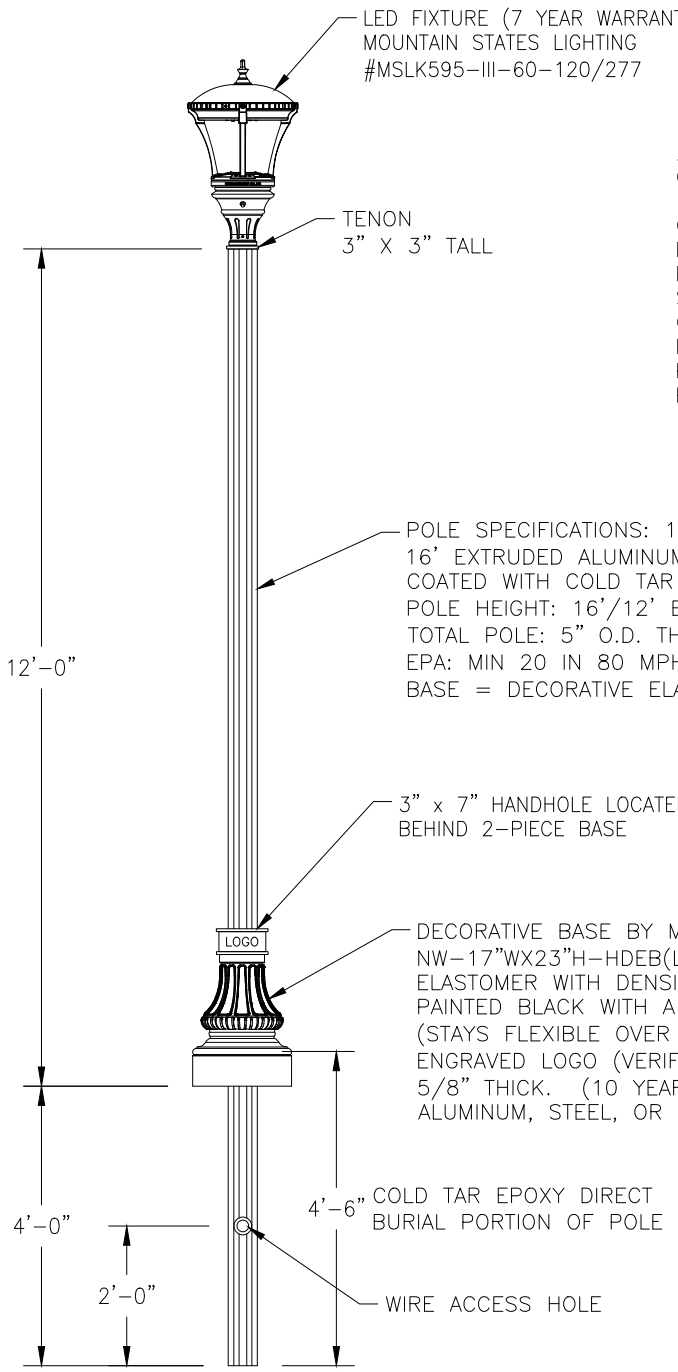

LED FIXTURE (7 YEAR WARRANTY)
MOUNTAIN STATES LIGHTING
#MSLK595-III-60-120/277

TENON
3" X 3" TALL

FIXTURE SPECIFICATIONS:

CATALOG NO.:	K595-P4NL-III-60(SSL)-7030-120:277-K14-PR7-3K-TB-BK-1-WS
OPTICAL SYSTEM:	FLAT ARRAY
IES CLASS.:	TYPE III
INPUT WATTAGE:	60W
SERIES:	SOLID STATE LIGHTING
CCT:	3000K
LINE VOLTAGE:	120:277V
POLE ADAPTOR:	K14
PAINT:	BLACK

POLE SPECIFICATIONS: 10 YEAR STRUCTURAL WARRANTY
16' EXTRUDED ALUMINUM POLE PAINTED, WITH THE FIRST 54"
COATED WITH COLD TAR EPOXY
POLE HEIGHT: 16'/12' EXTRUDED ALUMINUM
TOTAL POLE: 5" O.D. THICKNESS: 0.250"
EPA: MIN 20 IN 80 MPH ZONE (1.3 GUST FACTOR)
BASE = DECORATIVE ELASTOMER - AVERAGE 3/4" THICK (50 LBS)

3" x 7" HANDHOLE LOCATED
BEHIND 2-PIECE BASE

DECORATIVE BASE BY MOUNTAIN STATES LIGHTING #
NW-17"WX23"H-HDEB(LOGO)-BK HIGH DENSITY
ELASTOMER WITH DENSITY OF 71LBS PER CUBIC FOOT.
PAINTED BLACK WITH A MODIFIED URETHANE COATING
(STAYS FLEXIBLE OVER TIME W/MAX ADHESION)
ENGRAVED LOGO (VERIFY) BASE TO BE AN AVERAGE OF
5/8" THICK. (10 YEAR STRUCTURAL WARRANTY)
ALUMINUM, STEEL, OR CAST IRON IS NOT ACCEPTABLE

COLD TAR EPOXY DIRECT
BURIAL PORTION OF POLE

WIRE ACCESS HOLE

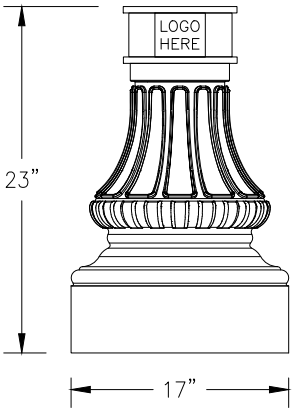

DECORATIVE BASE DETAIL

COPPERTON UTAH est. 1926

RESIDENTIAL LED STREET LIGHT

STANDARD PLAN
163
SHEET 1 OF 2

REV. 2025-0

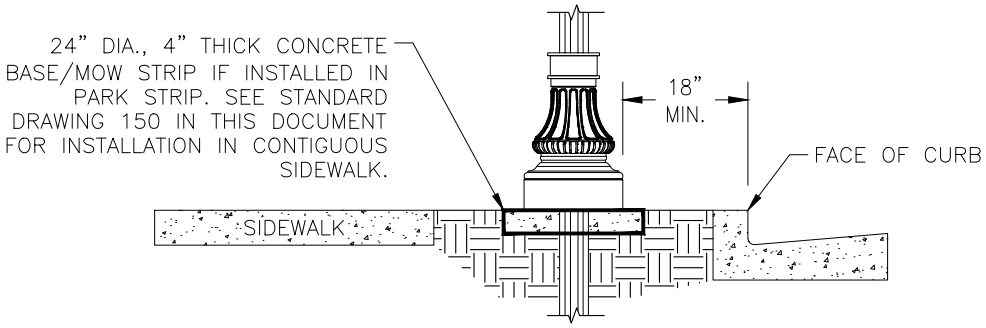

INSTALLATION DETAILS

COPPERTON UTAH

RESIDENTIAL LED STREET LIGHT

STANDARD PLAN

163

SHEET 2 OF 2

REV. 2025-0

NOTES:

Materials, construction, and workmanship shall be in accordance with the current edition of "APWA Manual of Standard Specifications" addendums, and modifications thereto; and as directed by the MSD Engineer.

Cast Iron to conform to ASTM A-48, Class 35B H-20 wheel loading.

Use D&L Supply Co. I-3517 or approved equivalent.

All connecting hardware to be stainless steel.

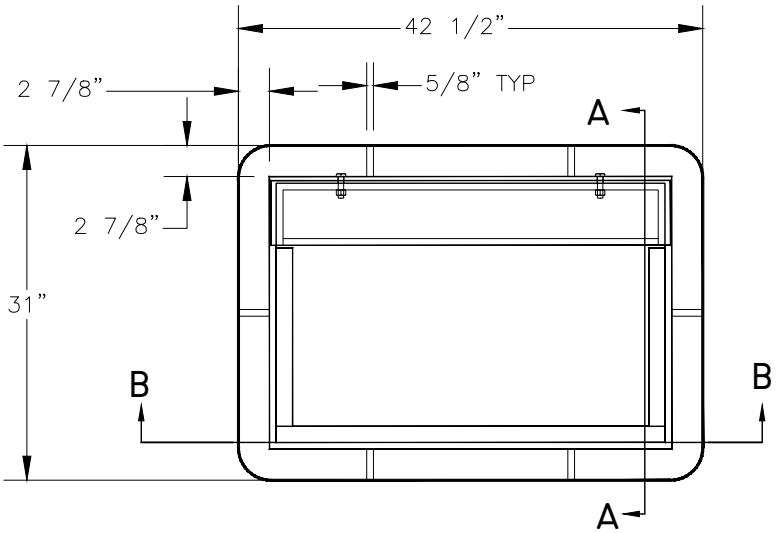

FRAME PLAN

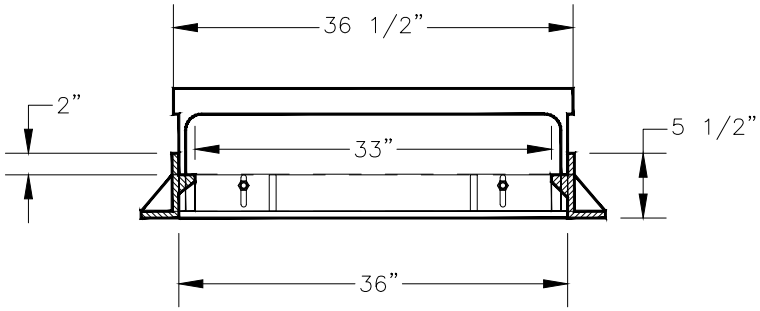

SECTION B-B

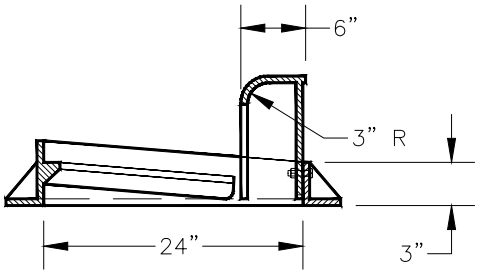

SECTION A-A

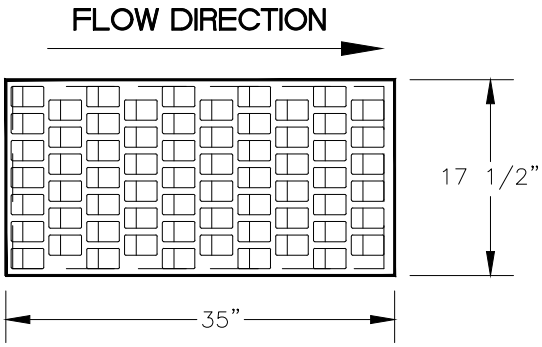

GRATE PLAN

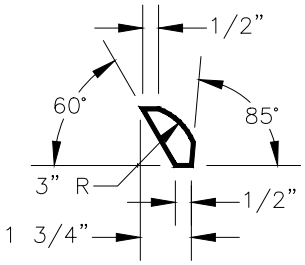

DETAIL

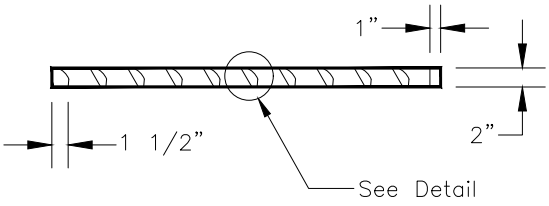

COPPERTON UTAH

CURB OPENING FRAME AND GRATE

STANDARD PLAN

201

SHEET 2 OF 2

REV. 2025-0

NOTES:

Materials, construction, and workmanship shall be in accordance with the current edition of "APWA Manual of Standard Specifications" addendums, and modifications thereto; and as directed by the MSD Engineer.

Ladder Rungs: Provide rungs in boxes over 4 feet deep, spaced 12" O.C. When measured from the floor of the box, place bottom rung 16" maximum above box floor. Place top rung within 3 feet of finish grade.

Follow all current OSHA requirements.

Align rungs with lid opening.

Rungs not required in boxes with concentric access.

Ladder rungs shall be copolymer polypropylene plastic coating over a $\frac{1}{2}$ inch steel bar.

Steel bar shall conform to ASTM 615 Grade 60.

Use M.A. Industries PS1-PF 10" Manhole Single Face Step or approved product with similar materials and ratings with MSD Engineer approval.

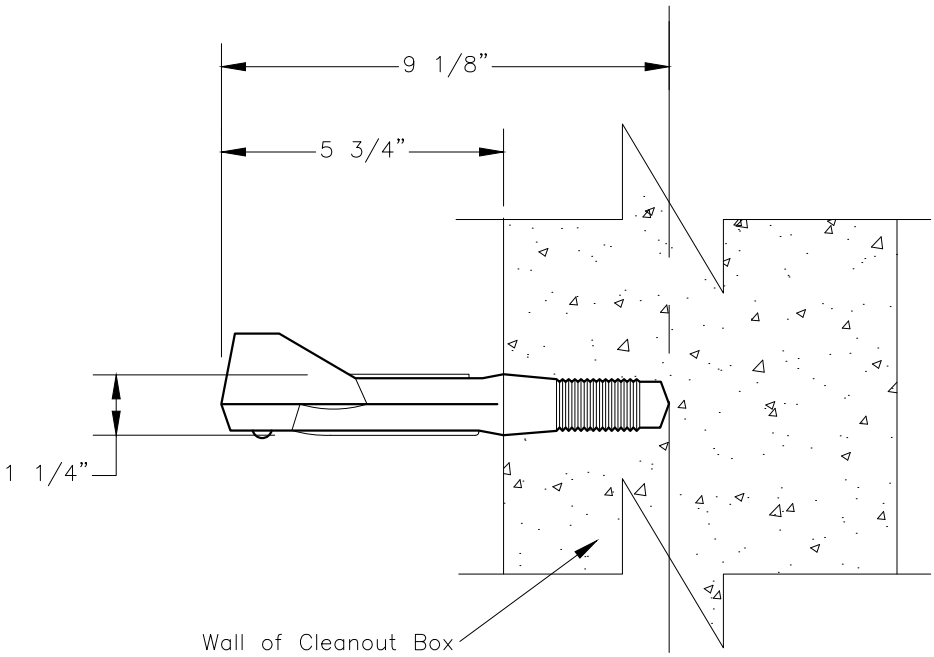

SECTION

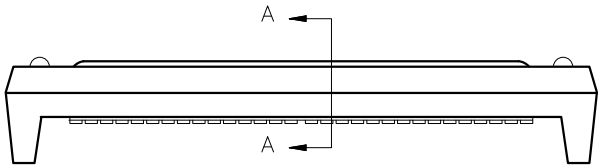

ELEVATION

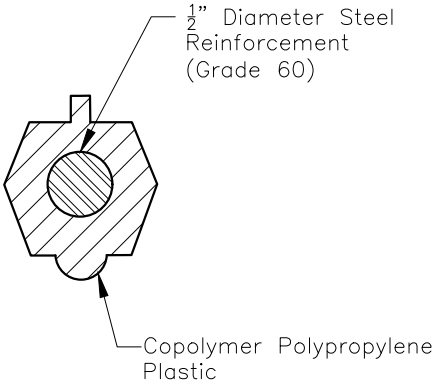

SECTION A-A

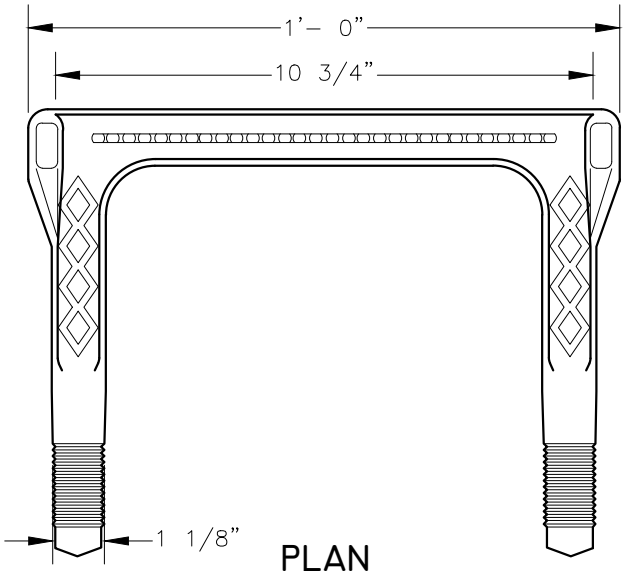

PLAN

COPPERTON UTAH

LADDER RUNG

STANDARD PLAN

208

SHEET 2 OF 2

REV. 2025-0

NOTES:

GENERAL DETENTION BASIN REQUIREMENTS:

1. Side slopes shall be a maximum of 3:1.
2. Sides and bottom of basin shall be rock lined. In special circumstances such as when the basin contains a park or playing field, the basin may be lined with grass, with approval of the MSD Engineer. For rock lining, use 2" rock with a minimum depth of 5" over separation fabric. If grass lined, the area must be adequately irrigated with a permanent pressurized irrigation system.
3. 1 foot of freeboard above the 10-year 24-hour storm event level or capacity for the 100-year 24-hour storm.
4. Concrete low flow pipe or channel preferred.

SECTION A. INLET AND OUTLET STRUCTURE REQUIREMENTS:

5. Outflow must be restricted per the code requirements.
6. Must include a concrete flared end section and locking grate, unless underground low-flow conveyance is utilized.
7. Pre-treatment required prior to outflow to approved facility, outlet structure must conform to Standard Detail 301 in this document or approved outlet structure.

SECTION B. REQUIREMENTS FOR ACCESSES TO ALL INLET/OUTLET STRUCTURES:

8. Must fall within the area of the arc (shown in the Accessible Road/Pad Detail), which is representative of the maintenance vehicles' reach.
9. No increase in elevation greater than 5' from surface of accessible road or pad.
10. No decrease in elevation greater than 35' from surface of accessible road or pad.
11. Must be a minimum of 45 feet in length from traveled way of connecting roadway if a detention pond specific access road or pad is utilized.

SECTION C. ACCESSIBLE ROAD/PAD REQUIREMENTS:

12. Must be easily accessible by maintenance vehicles.
13. Must not exceed a maximum longitudinal slope of 12%.
14. Must be at least 10' in width.
15. No cross-slope in excess of 2%.
16. Must be a minimum of 6" thick concrete.
17. Must have measures in place restricting public access (ex. bollards). If bollards are used, must be of stainless steel material.
18. Must comply with all other local, county, state, and federal requirements.

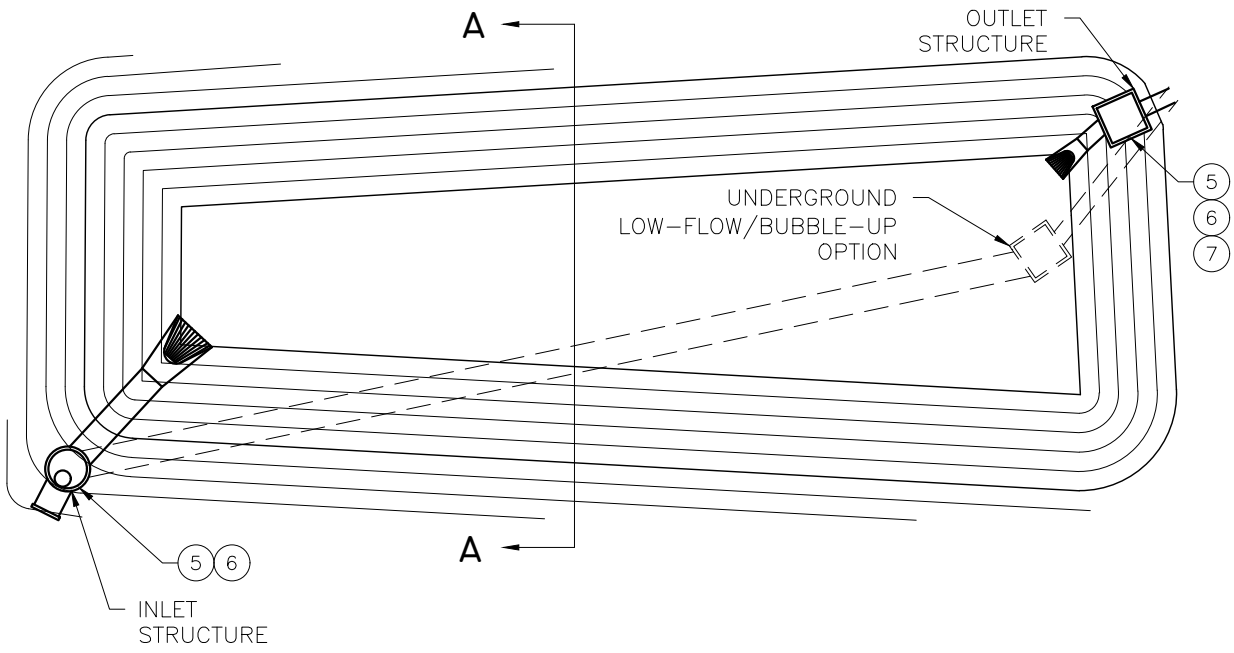

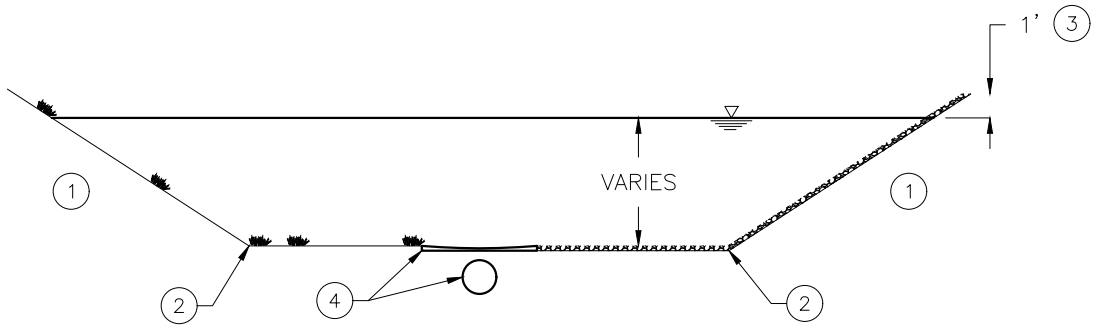

SECTION A-A - TYPICAL BASIN SECTION

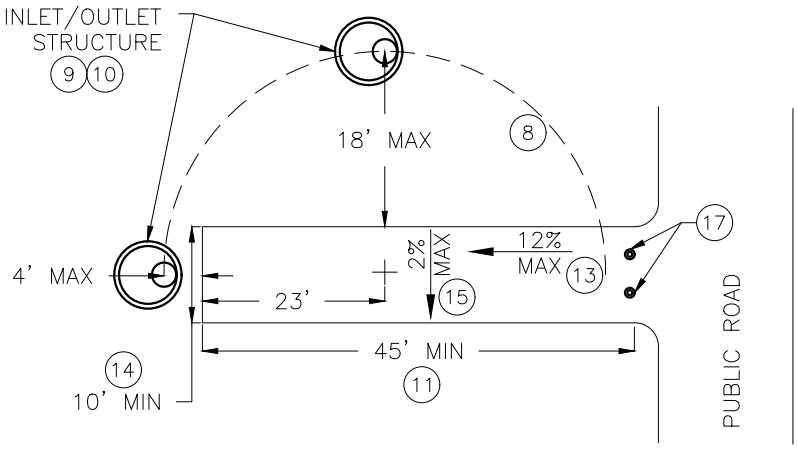

TYPICAL COUNTY ACCESSIBLE ROAD/PAD DETAIL

COPPERTON UTAH

DETENTION BASIN GUIDELINES

STANDARD PLAN

300

SHEET 2 OF 2

REV. 2025-0

NOTES:

Materials, construction, and workmanship shall be in accordance with the current edition of "APWA Manual of Standard Specifications" addendums, and modifications thereto; and as directed by the MSD Engineer. Reference to specific sections of APWA does not limit requirements to that section.

1. Developer shall install lock and chain on handwheel. Lock to be supplied by SLCO Operations Department.

2. Provide gate with stop nut on stem to hold gate at 10" above invert of orifice or higher.

3. Golden Harvest slide gate with non-rising stem and handwheel, or approved equal. Cut grate as required for extension of frame.

4. The drawing on Sheet 2 is intended to be general in nature, but shows the overall conceptual requirements for the outlet structure, including box with weir wall, orifice, gate, hood, and grated top. The specific size of the components shall be designed for the specific application.

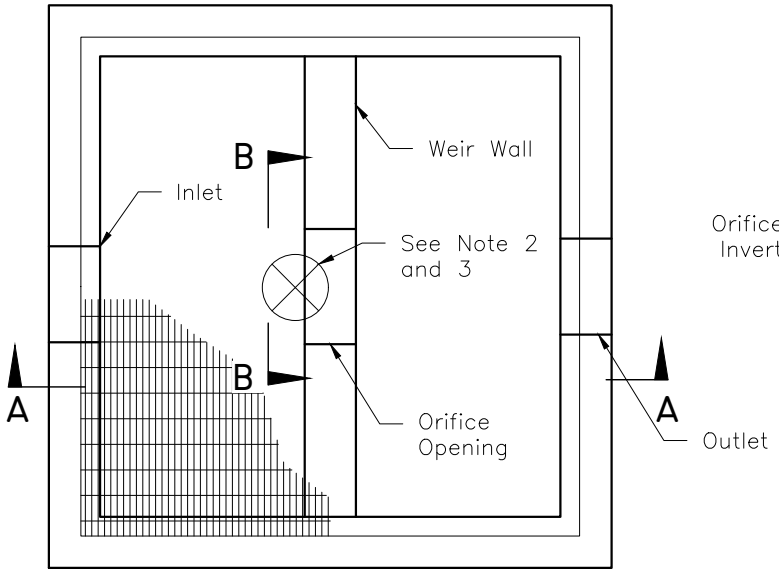

PLAN

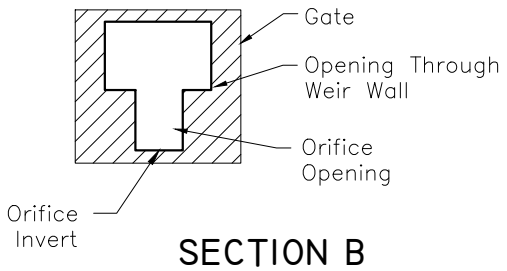

SECTION B

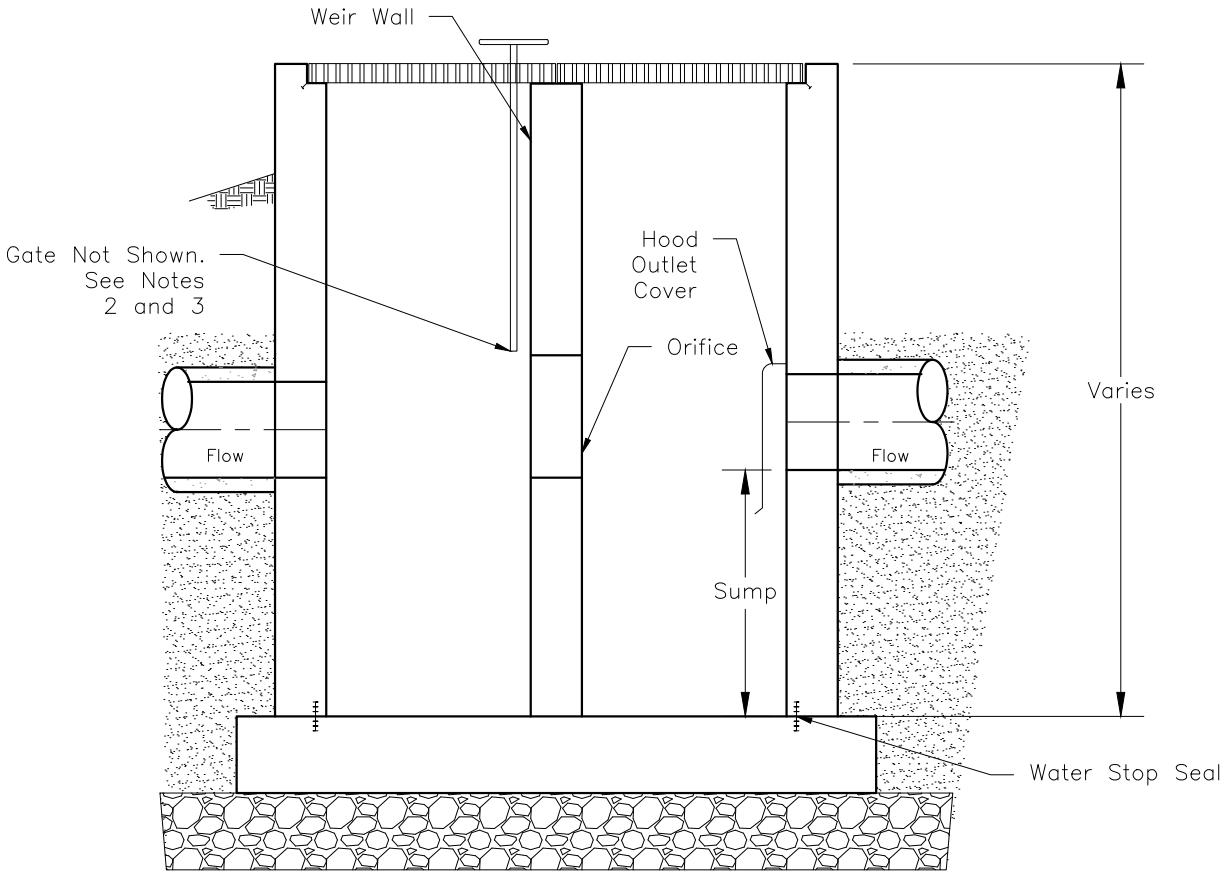

SECTION A

COPPERTON UTAH	OUTLET STRUCTURE GUIDELINES	STANDARD PLAN 301 SHEET 2 OF 2

REV. 2025-0

COPPERTON
UTAH

ENGINEERING

STANDARDS & DRAWINGS

GREATER SALT LAKE
Municipal Services District

860 W Levoy Drive, Suite #300
Taylorsville, UT 84123
(385) 910-7027
msd.utah.gov/engineering