Physical Electric Layout Diagram - Sample

D EG4 PowerPro Inside Version
34.1 × 18.1 × 10.4 in
285 Lbs

F EG4 GridBOSS
31.5 x 19.7 x 7 in
55 Lbs

J Emergency Stop Switch
IMO - BG10P34-11

E EG4 FlexBOSS 21
30.43 x 22.28 x 11.22 in
115 Lbs

H Siemens
MM0202B1200R
H: 17 in x W: 16.5 in x D: 5 in

Legend

- InterConnect
- Battery
- Grid
- Generator
- PV Wiring
- Branch Circuits

Outside Service Wall

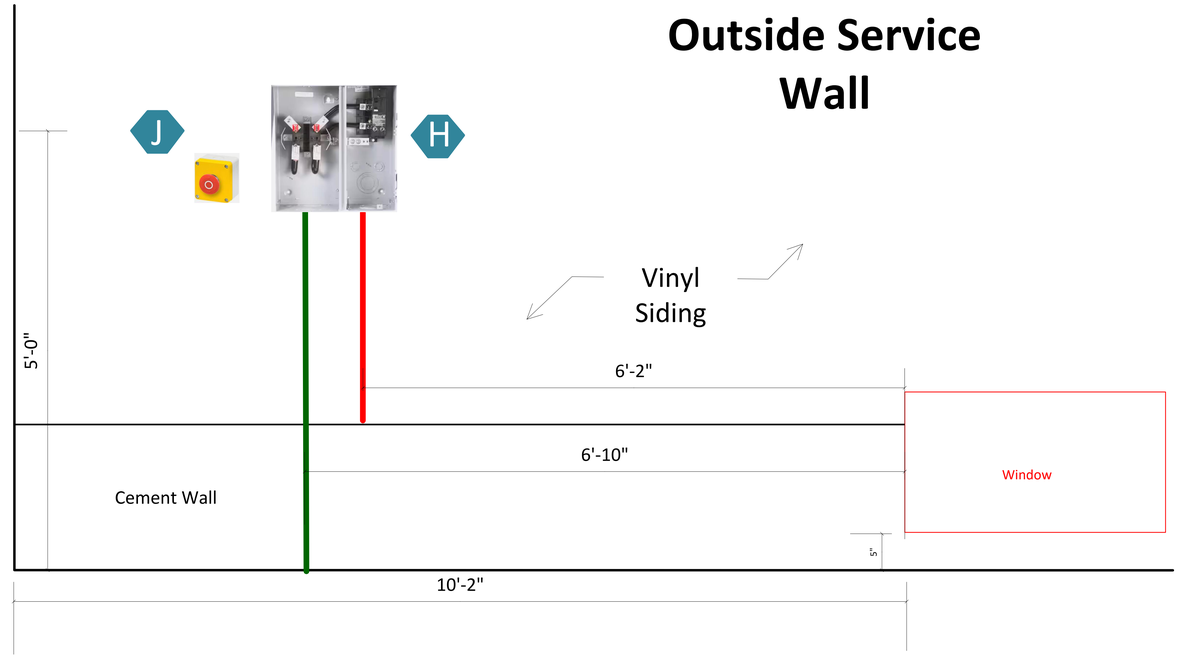

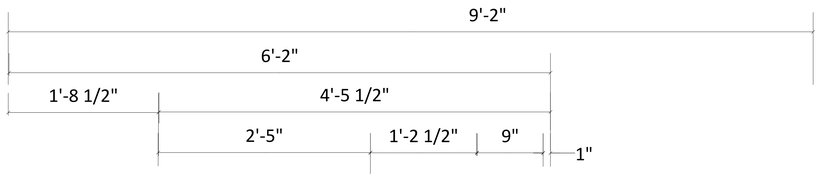

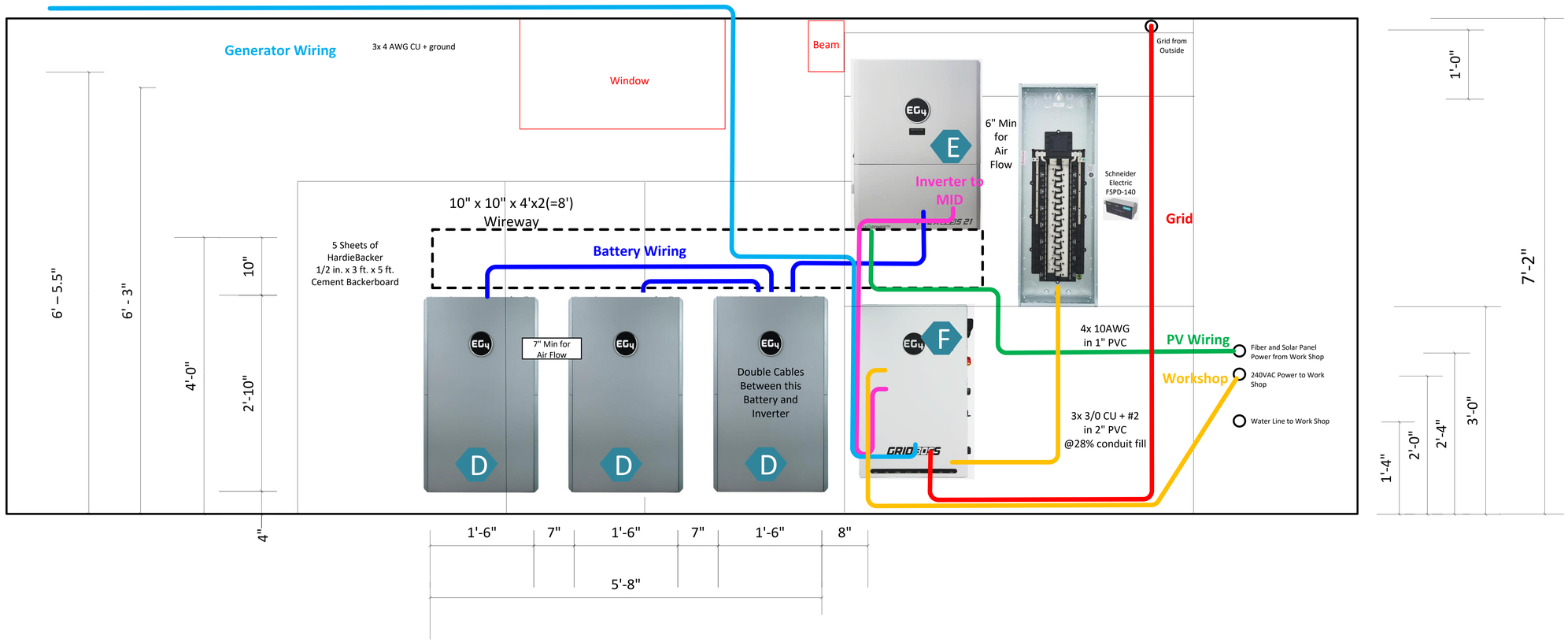

Unfinished Basement Power Wall

PROJECT:	Page Number	Drawn by:	
Your Home or Business	1 of 1	Bobby Calabrese bobby@caltechstudio.com	CalTech Studio LLC
	Creation Date 5/06/2026	**Revision and Date** v3.1 - 5/06/2026	CaltechStudio.com (908) 917-8281