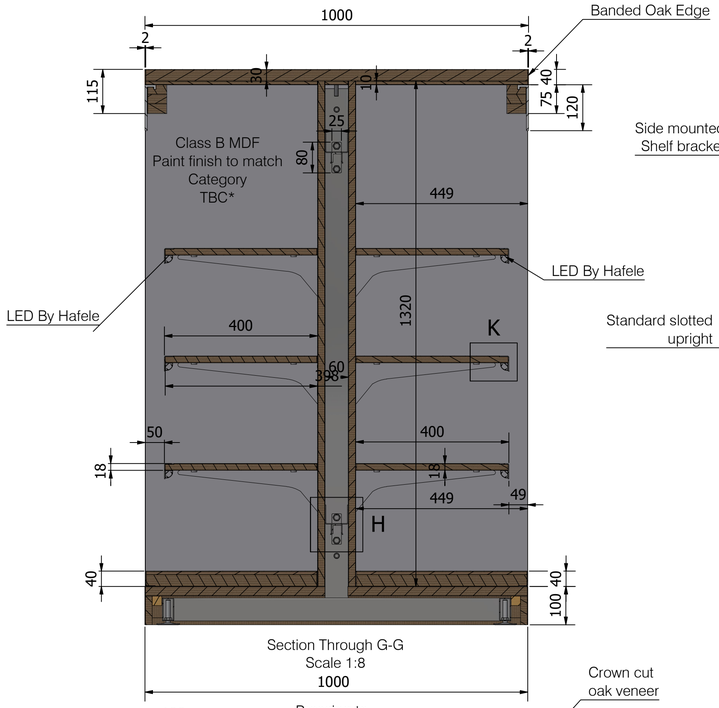
1000
Banded Oak Edge
Class B MDF
Paint finish to match
Category
TBC*
449
LED By Hafele
LED By Hafele
400
1320
K
H
Section Through G-G
Scale 1:8
1000

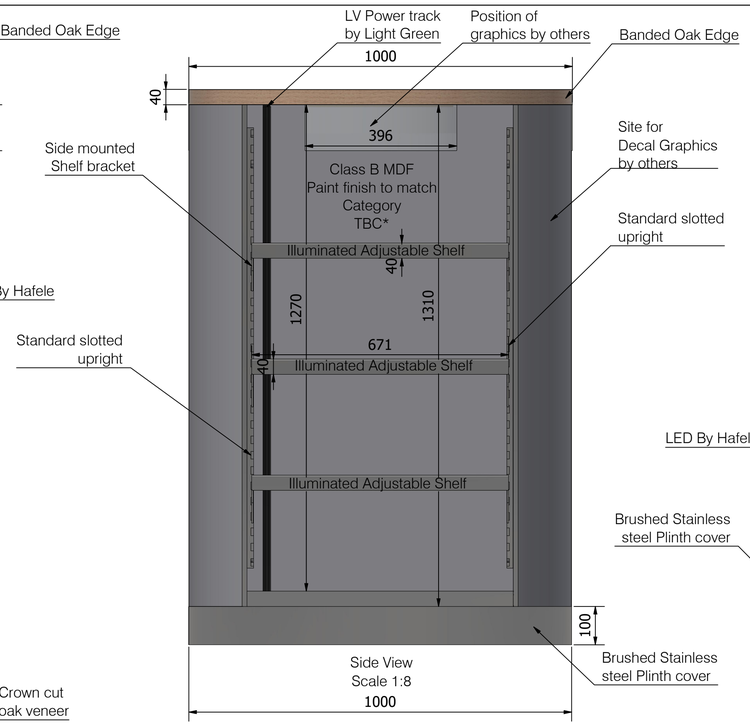
LV Power track
by Light Green
Position of
graphics by others
Banded Oak Edge
1000
Side mounted
Shelf bracket
Site for
Decal Graphics
by others
Class B MDF
Paint finish to match
Category
TBC*
Standard slotted
upright
Illuminated Adjustable Shelf
Standard slotted
upright
Illuminated Adjustable Shelf
Illuminated Adjustable Shelf
Brushed Stainless
steel Plinth cover
Side View
Scale 1:8
1000

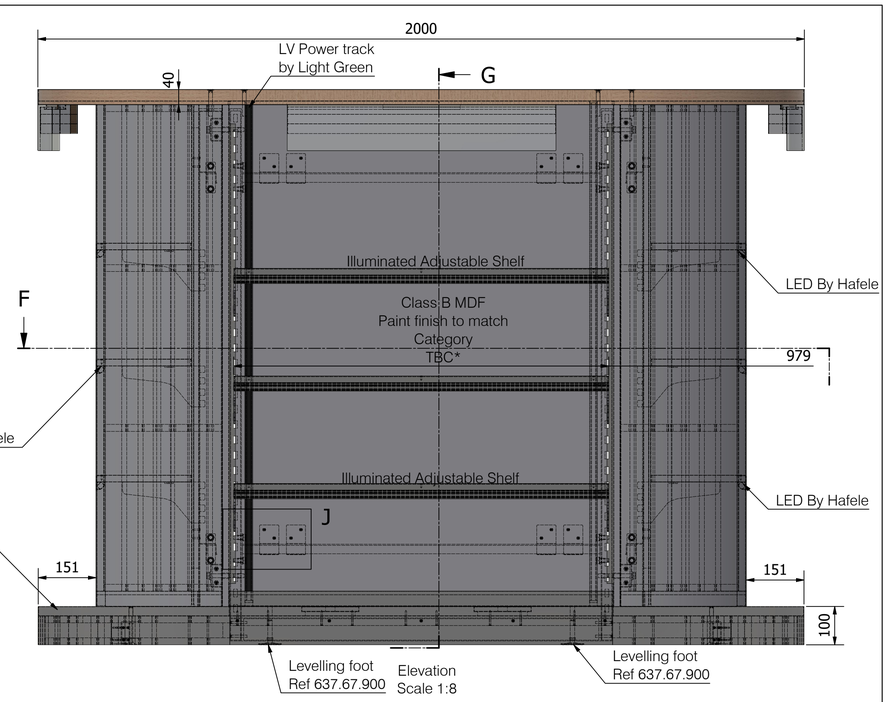
2000
LV Power track
by Light Green
G
F
Illuminated Adjustable Shelf
Class B MDF
Paint finish to match
Category
TBC*
LED By Hafele
LED By Hafele
Illuminated Adjustable Shelf
LED By Hafele
J
Brushed Stainless
steel Plinth cover
Levelling foot
Ref 637.67.900
Elevation
Scale 1:8
Levelling foot
Ref 637.67.900

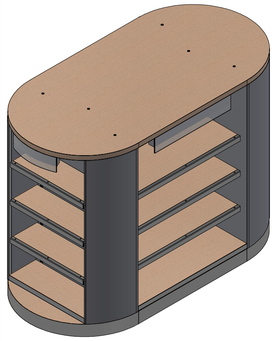

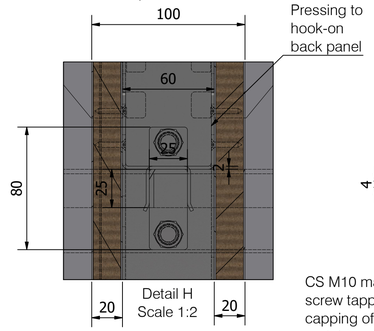
100
Pressing to
hook-on
back panel
60
80
Detail H
Scale 1:2
20
20

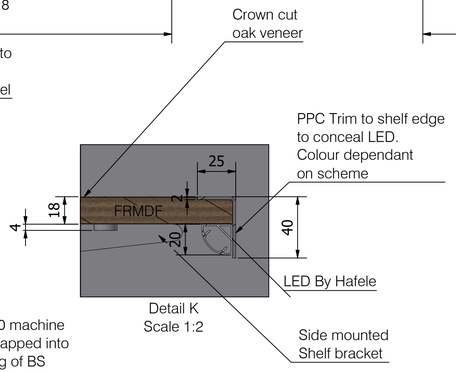
Crown cut
oak veneer
PPC Trim to shelf edge
to conceal LED.
Colour dependant
on scheme
25
FRMDF
LED By Hafele
Detail K
Scale 1:2
Side mounted
Shelf bracket

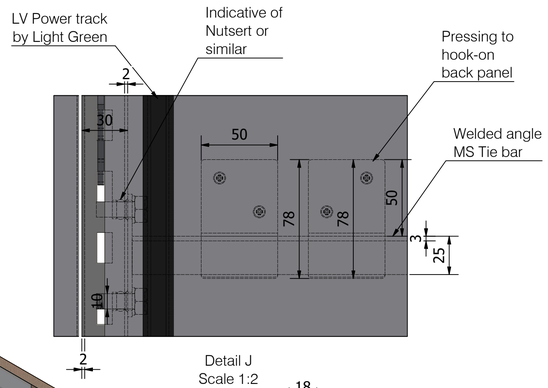
LV Power track
by Light Green
Indicative of
Nutsert or
similar
Pressing to
hook-on
back panel
Welded angle
MS Tie bar
50
78
78
50
Detail J
Scale 1:2

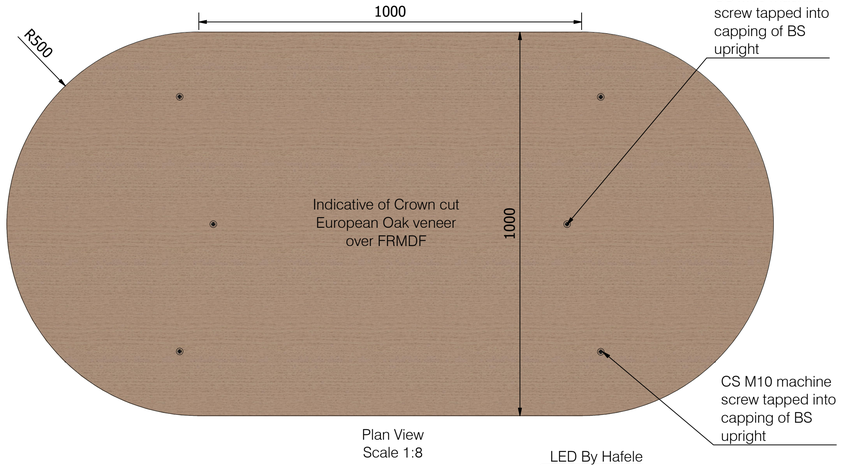
1000
R500
CS M10 machine
screw tapped into
capping of BS
upright
Indicative of Crown cut
European Oak veneer
over FRMDF
1000
CS M10 machine
screw tapped into
capping of BS
upright
Plan View
Scale 1:8

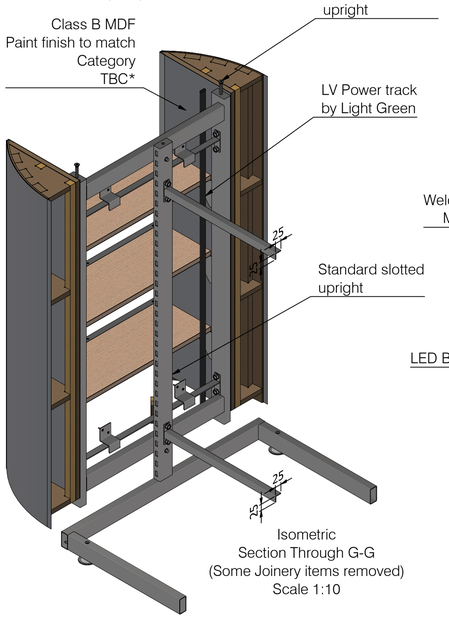
Class B MDF
Paint finish to match
Category
TBC*
CS M10 machine
screw tapped into
capping of BS
upright
LV Power track
by Light Green
Standard slotted
upright
Isometric
Section Through G-G
(Some Joinery items removed)
Scale 1:10

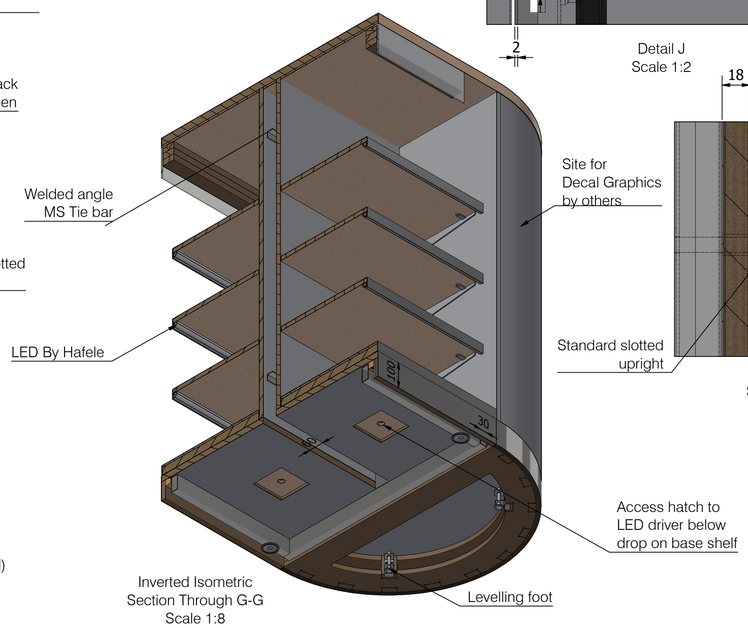
Welded angle
MS Tie bar
LED By Hafele
Access hatch to
LED driver below
drop on base shelf
Levelling foot
Inverted Isometric
Section Through G-G
Scale 1:8

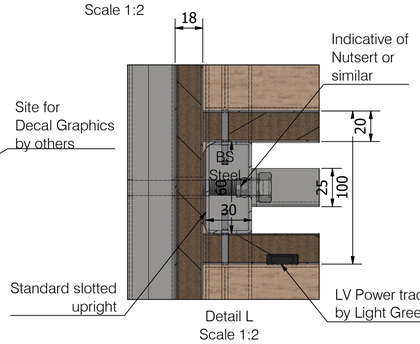
18
Indicative of
Nutsert or
similar
Site for
Decal Graphics
by others
BS
Steel
Standard slotted
upright
LV Power track
by Light Green
Detail L
Scale 1:2

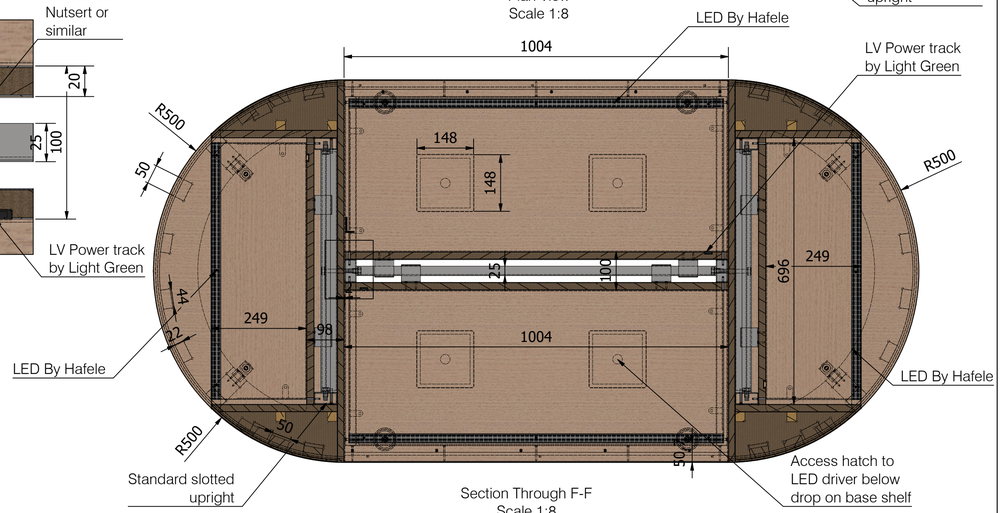
LED By Hafele
1004
LV Power track
by Light Green
R500
R500
148
148
249
696
249
1004
LED By Hafele
LED By Hafele
R500
Standard slotted
upright
Section Through F-F
Scale 1:8
Access hatch to
LED driver below
drop on base shelf