VITROSO DK76

High performance uPVC

The VITROSO DK76 is a premium uPVC system designed for exceptional performance. Depending on the model, it features either a 5- or 6-chamber design, providing superior thermal efficiency tailored to your needs. Its steel reinforcement ensures outstanding structural integrity, making it ideal for both single-family and multi-family residential buildings. Available in white or black vinyl, it combines an elegant, modern aesthetic with top-tier functionality.

0.16	0.22	1/2	0.01	CW65
U-factor /tripple glazed/	U-factor /double glazed/	Low E Coating	Air Infiltration /CFM/	PG

Available in :

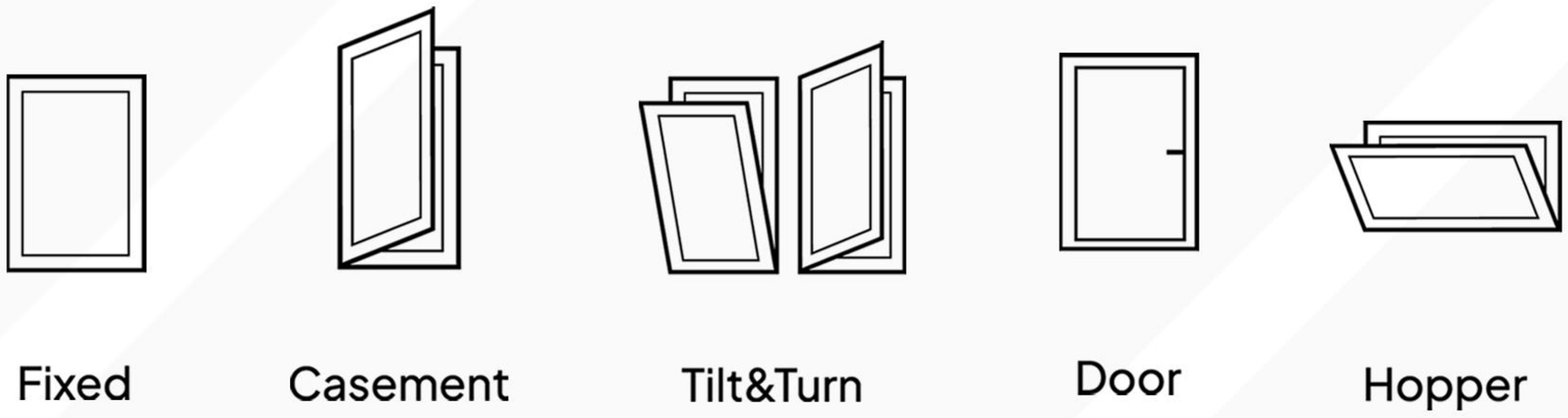

-5-6 chamer profile design for industry leading thermal performance

-Multi point locking hardware made in Gemany

-High performance glass by Guardian glass

-High quality finish by Renolit FX

-Heavy gauge steel reinfocement in every profile

-Two EPDM gaskets provide exceptional water and air leacking protection

-3" System depth

-Glazing up to 2"

-Double or triple glazed

-Max sash weight 250lbs

-Optional concealed hinges

www.vitroso.com

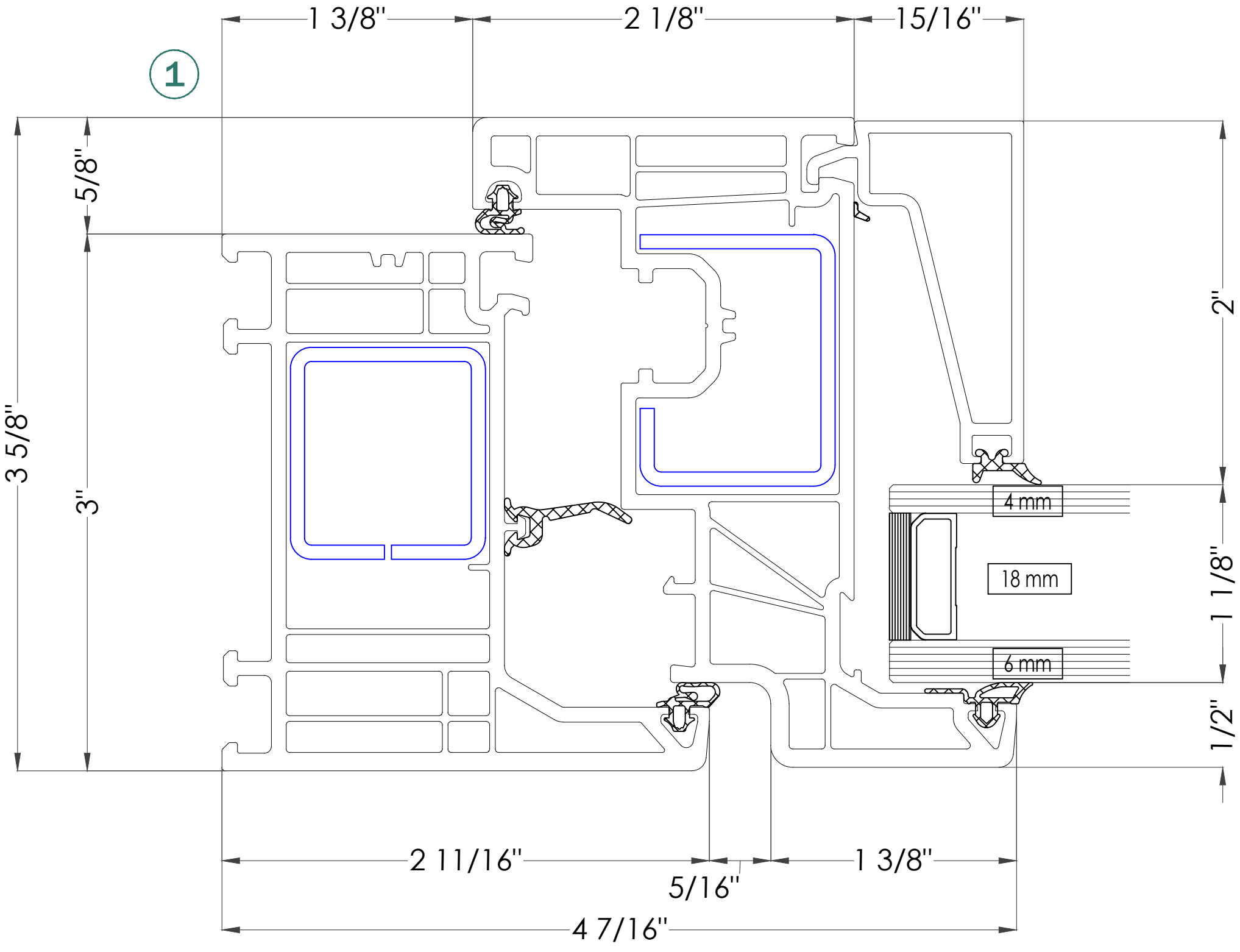

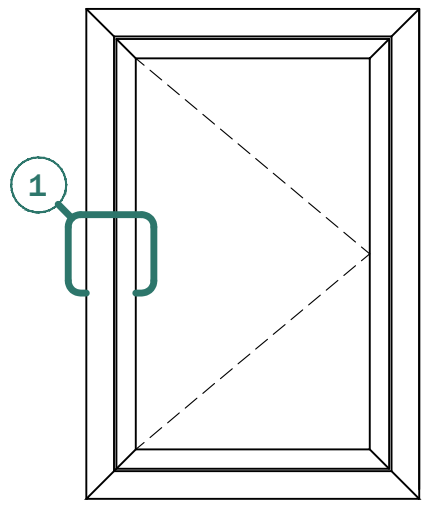

VITROSO DK76 Elegant Abstract

CASEMENT WINDOW

vitroso

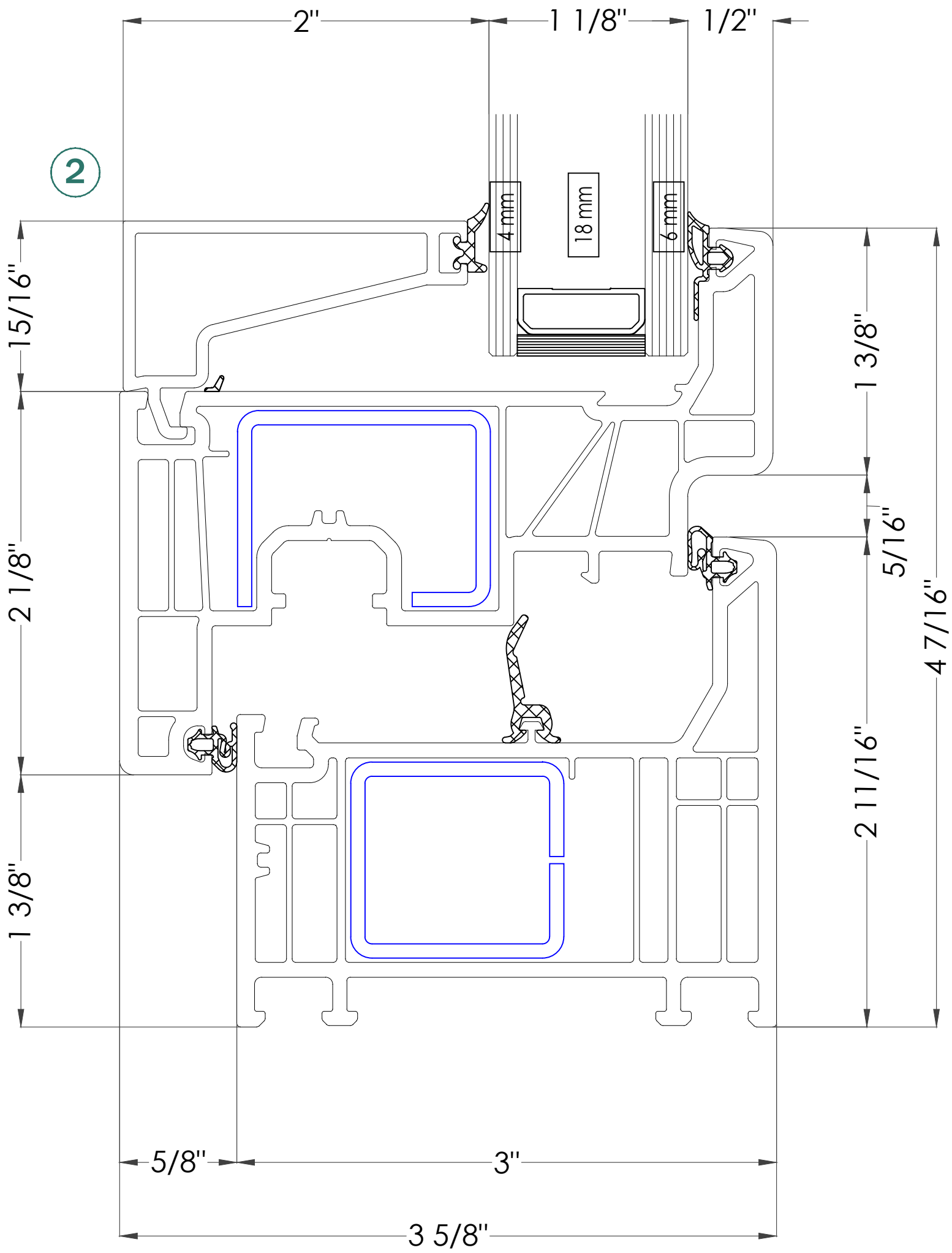

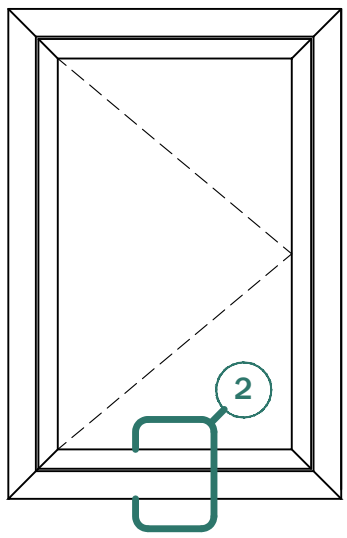

VITROSO DK76 Elegant Abstract

CASEMENT WINDOW

vitroso

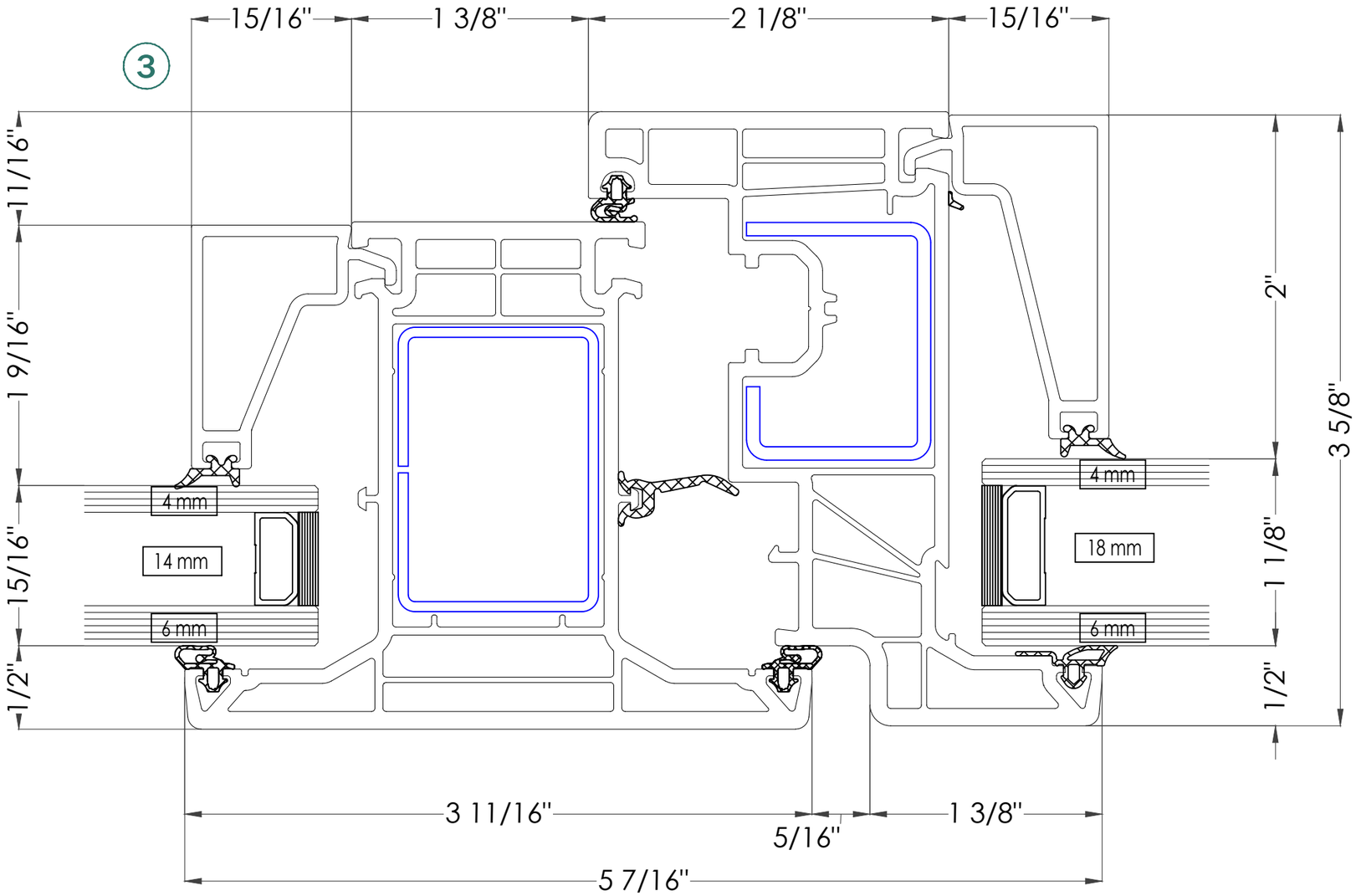

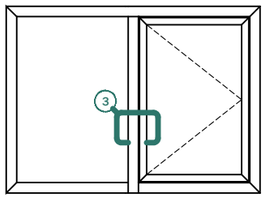

VITROSO DK76 Elegant Abstract

CASEMENT / SWING IN & FIXED WINDOW

vitroso

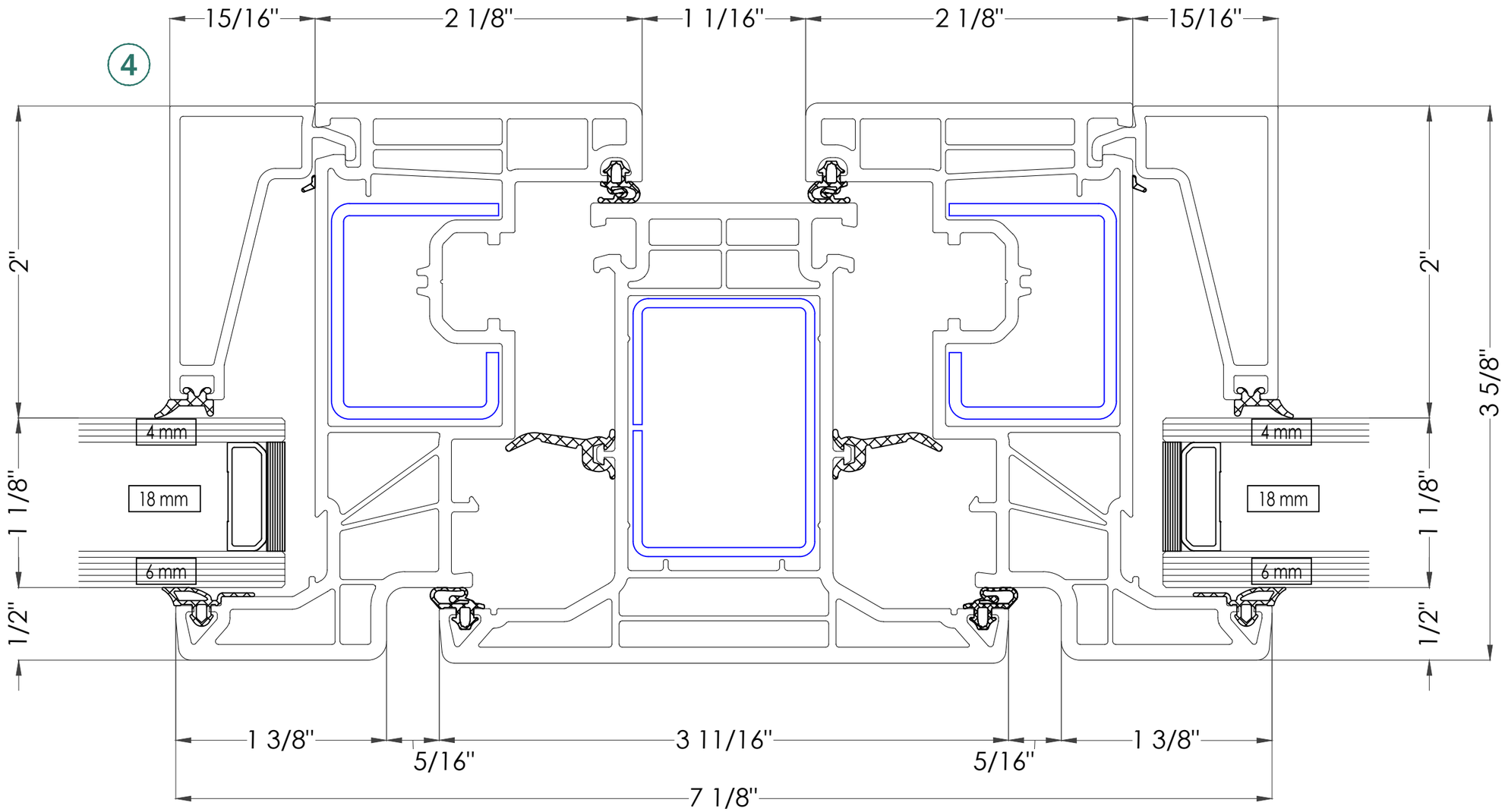

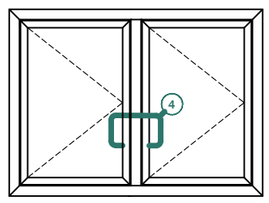

VITROSO DK76 Elegant Abstract

CASEMENT / SWING IN WINDOWS

vitroso

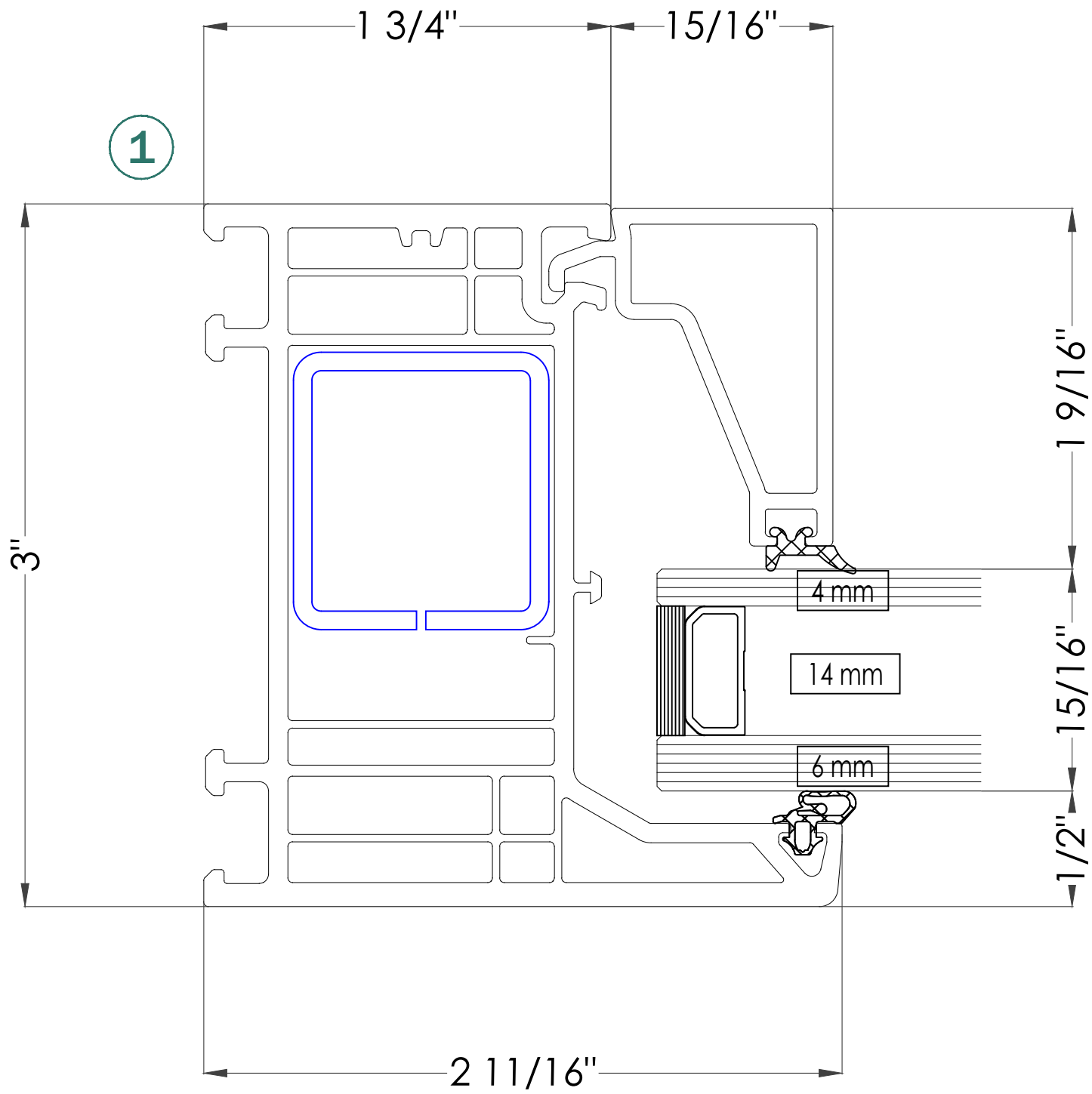

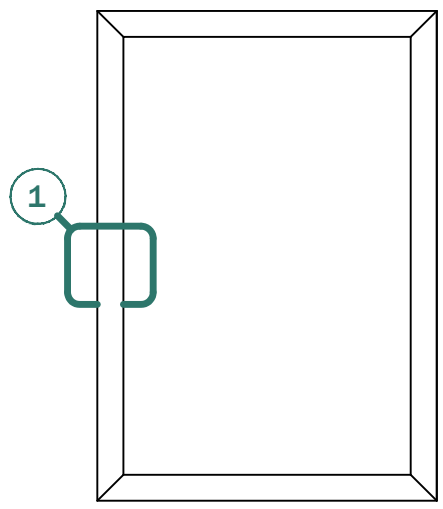

VITROSO DK76 Elegant Infinity

FIXED WINDOW

vitroso

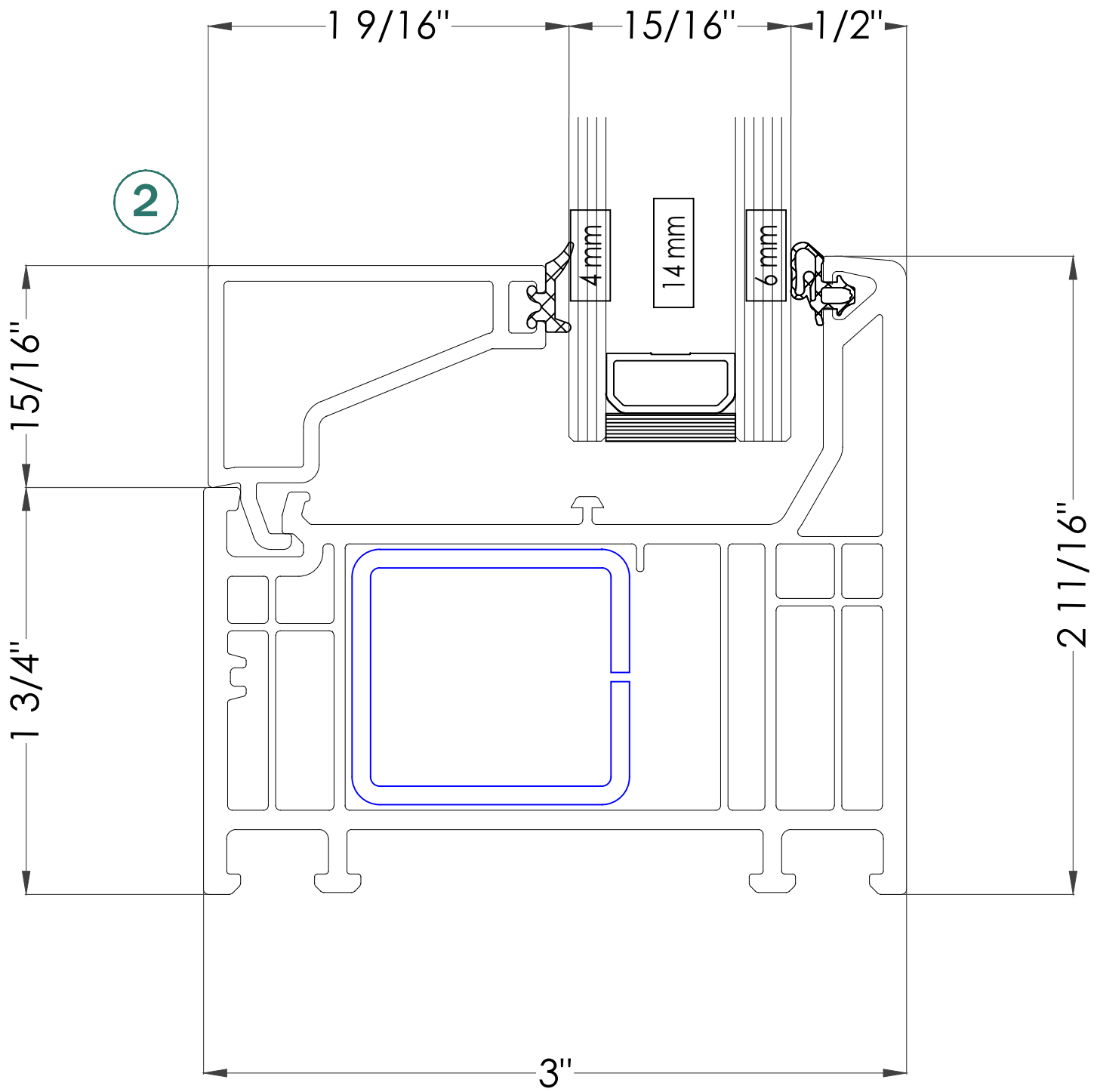

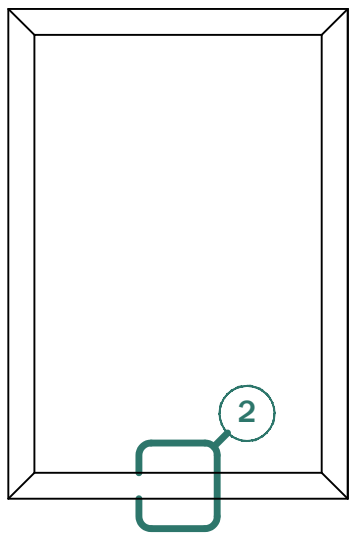

VITROSO DK76 Elegant Infinity

FIXED WINDOW

vitroso

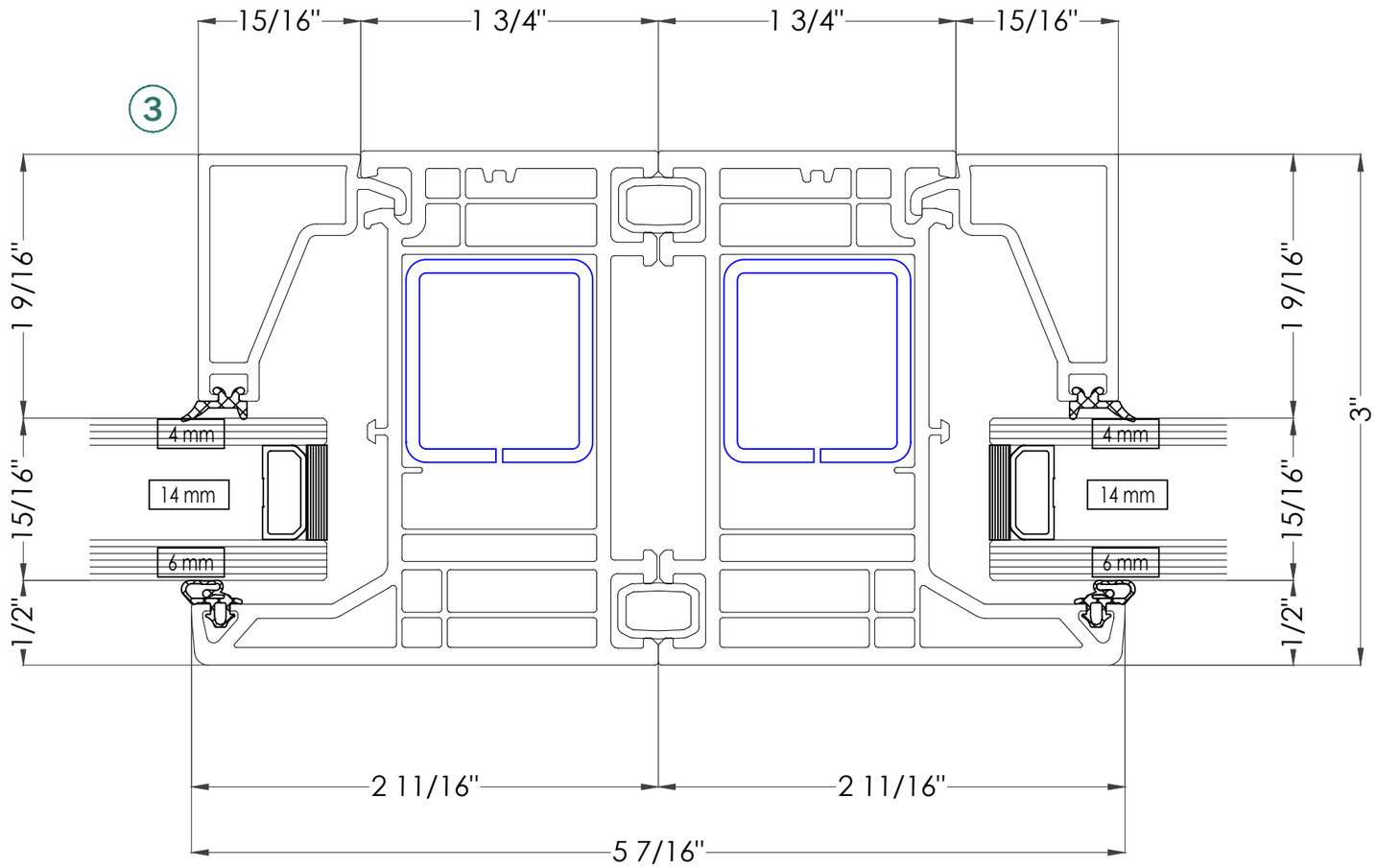

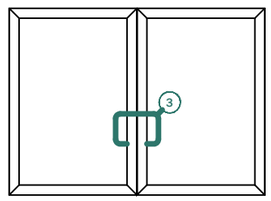

VITROSO DK76 Elegant Infinity

FIXED WINDOWS

vitroso

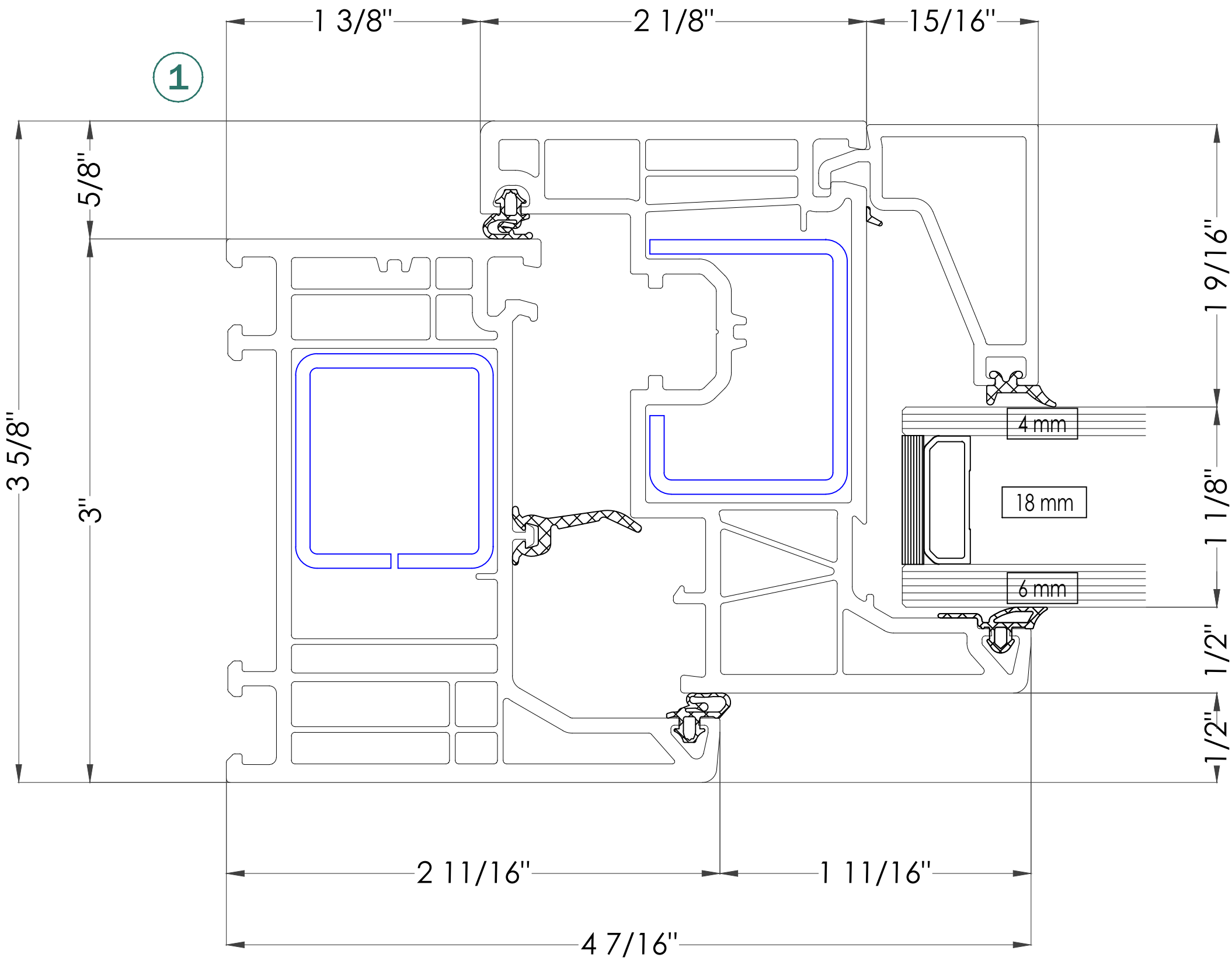

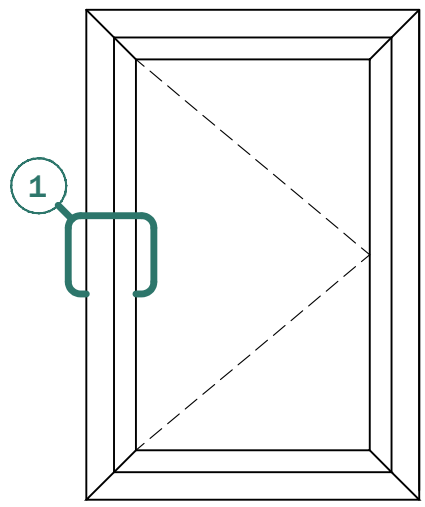

VITROSO DK76 Elegant Infinity

CASEMENT / SWING IN

vitroso

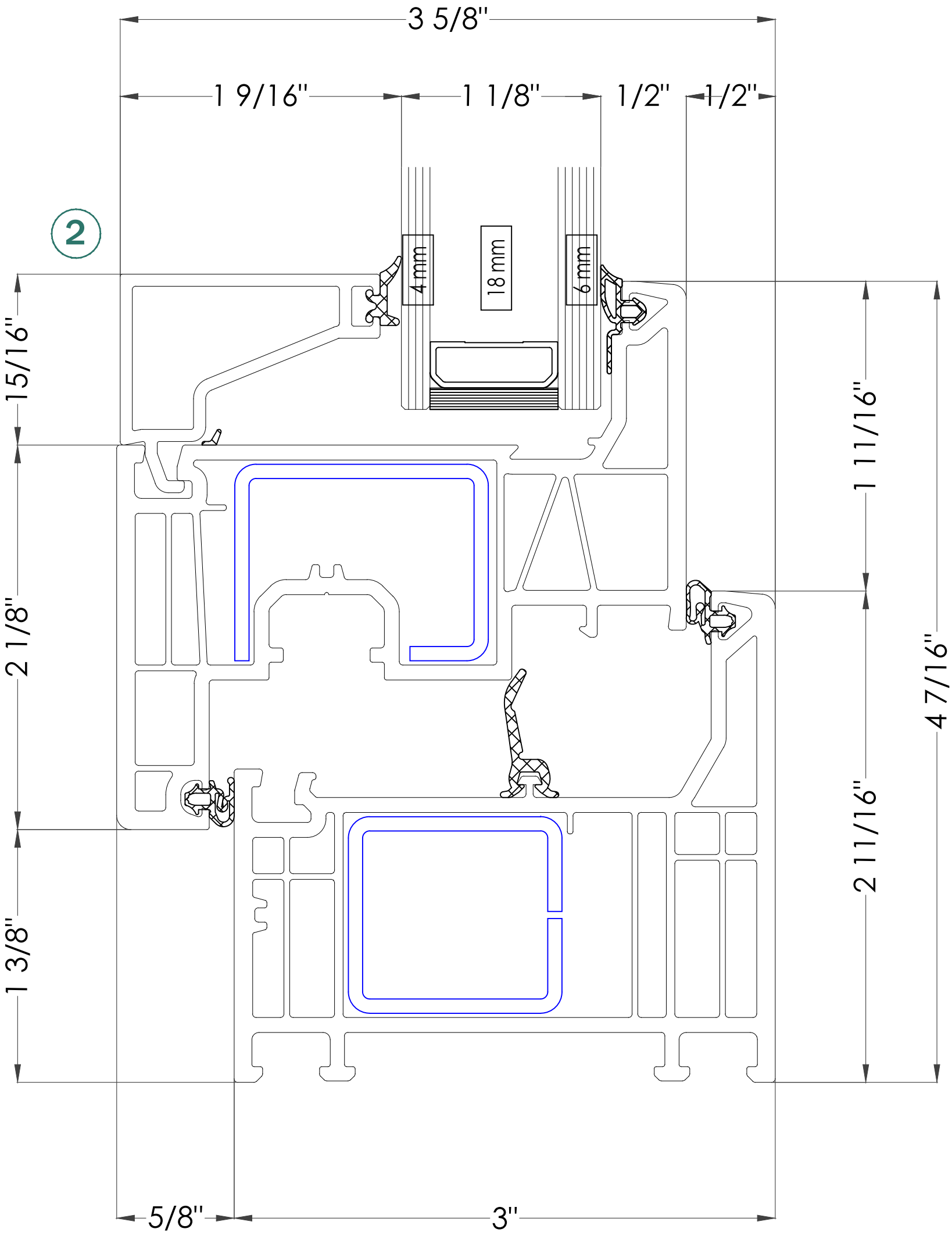

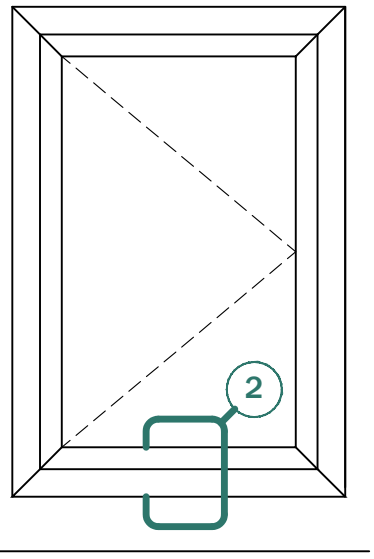

VITROSO DK76 Elegant Infinity

CASEMENT / SWING IN

vitroso

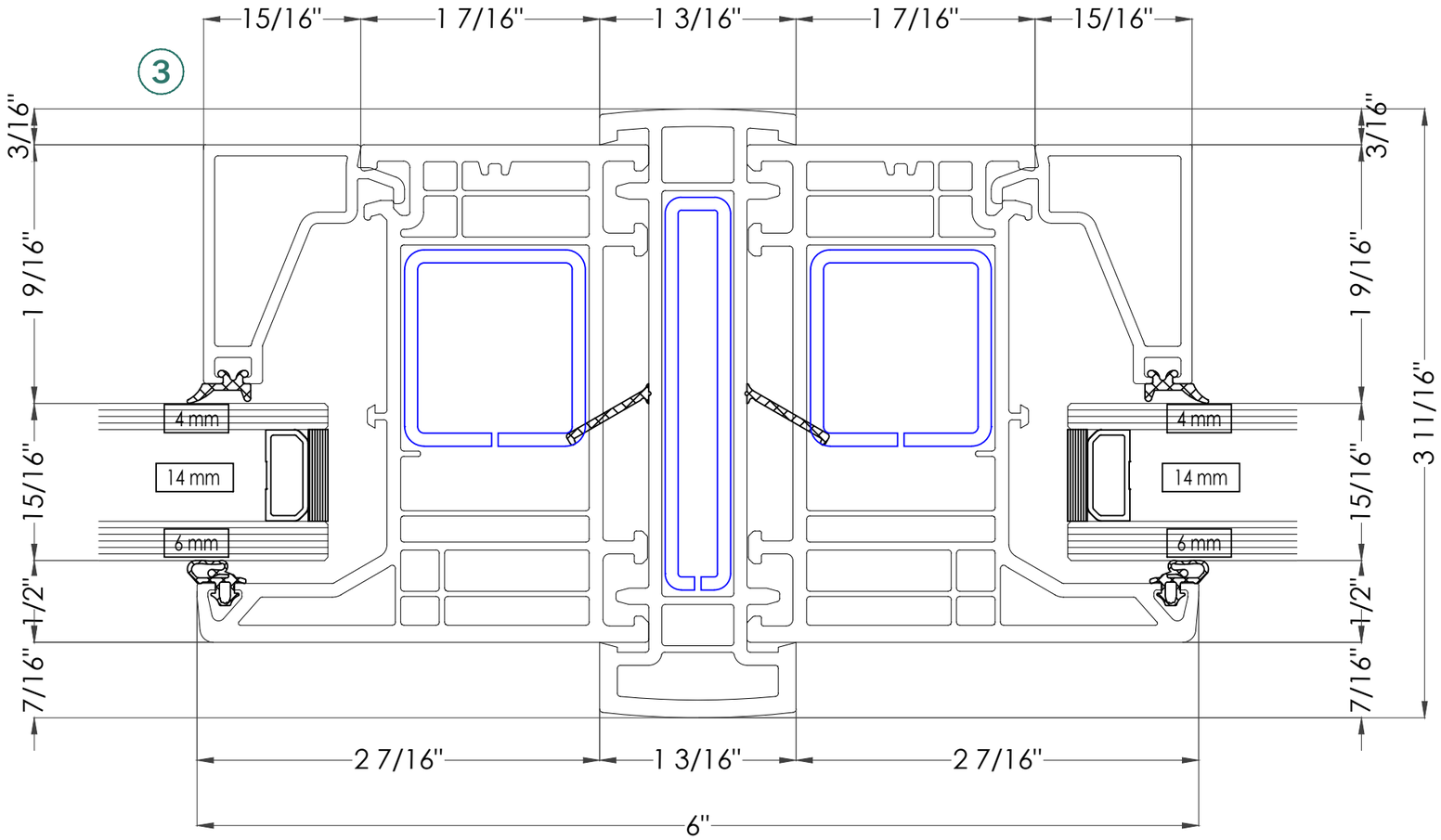

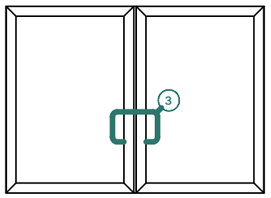

VITROSO DK76 Elegant Infinity

FIXED WINDOWS

vitroso

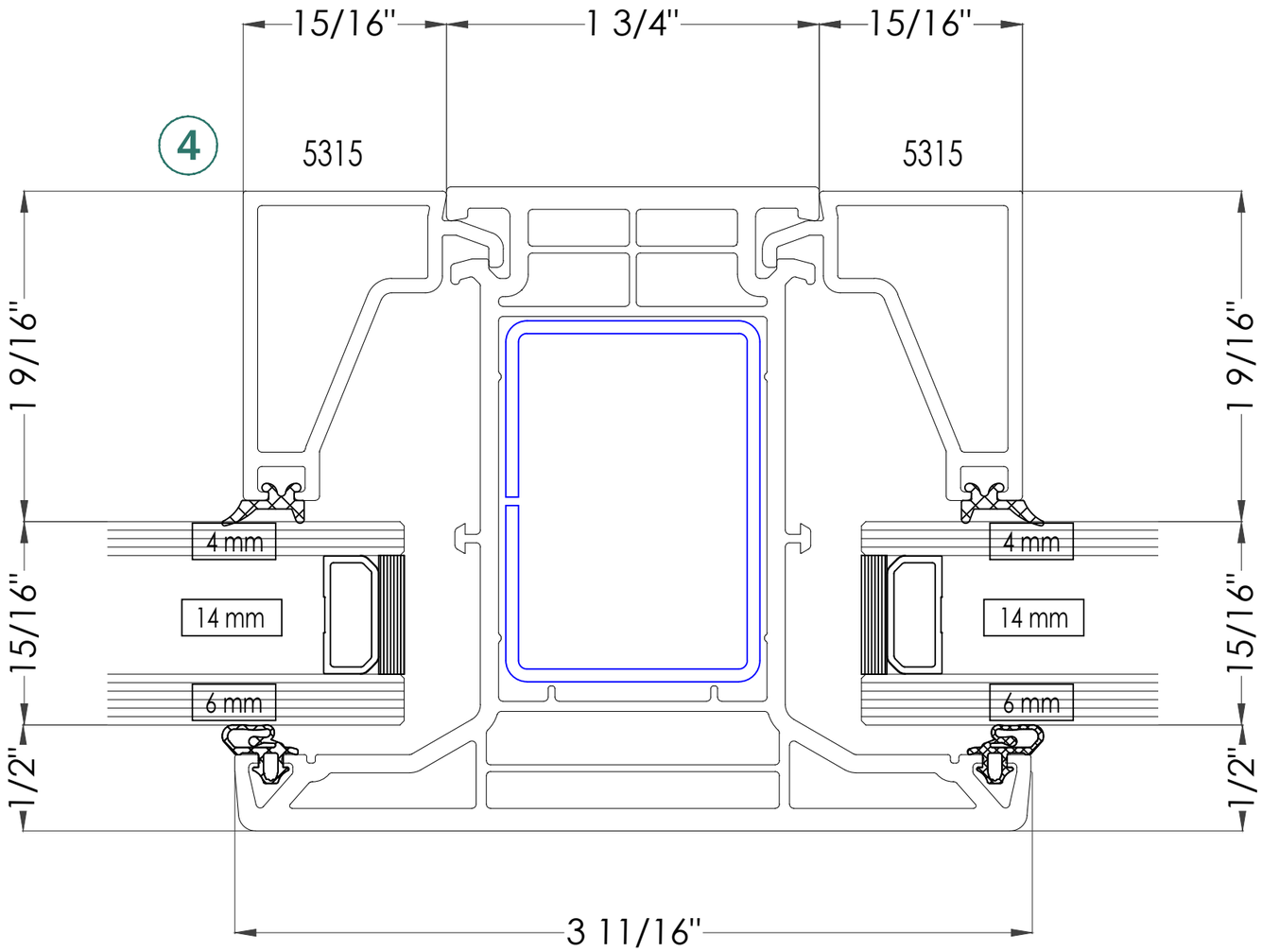

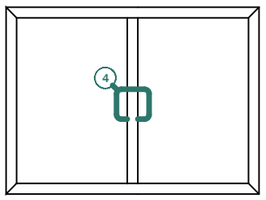

VITROSO DK76 Elegant Infinity

FIXED WINDOWS

vitroso

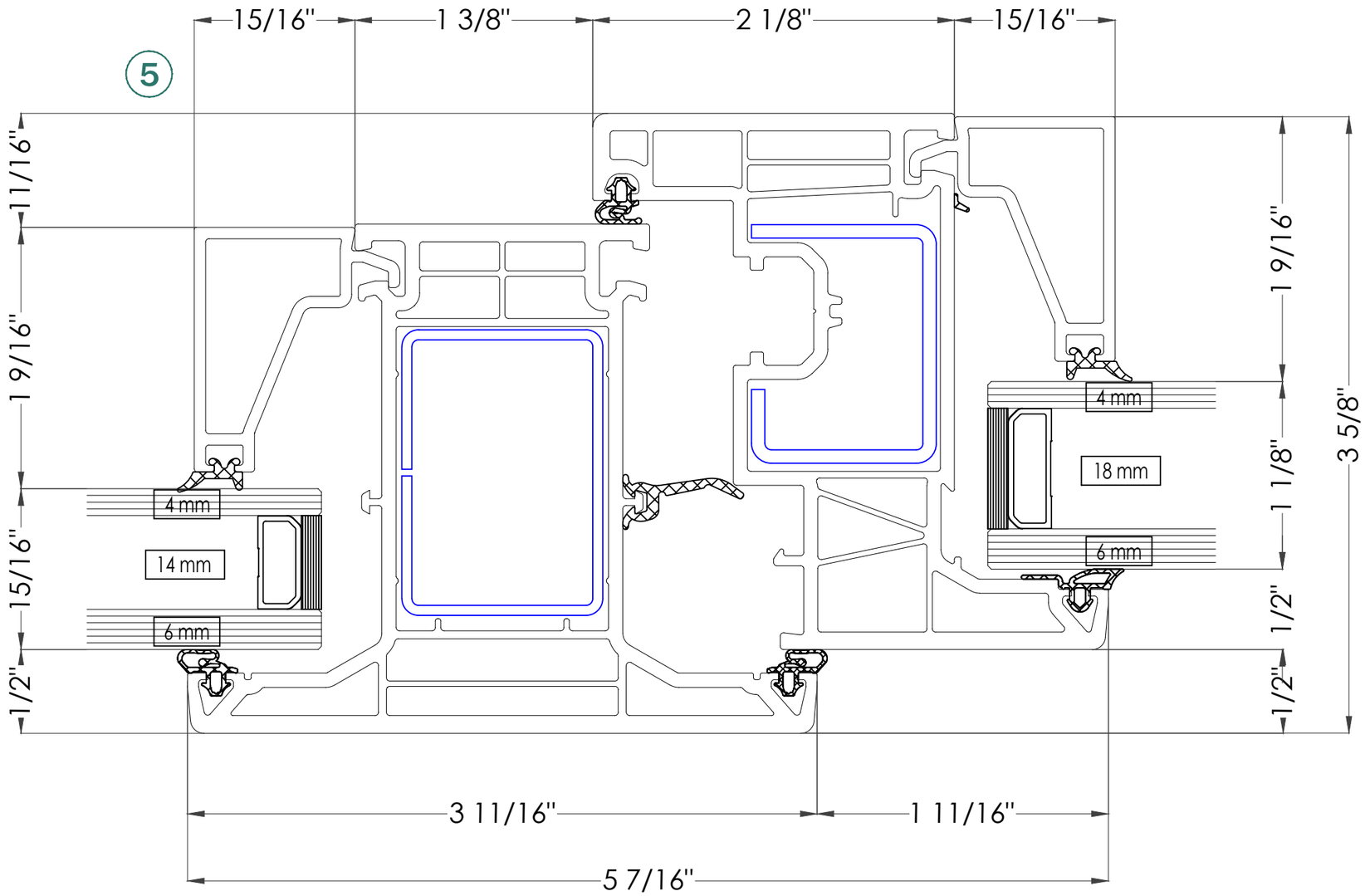

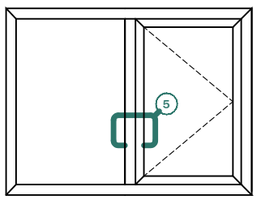

VITROSO DK76 Elegant Infinity

CASEMENT / SWING IN & FIXED WINDOW

vitroso

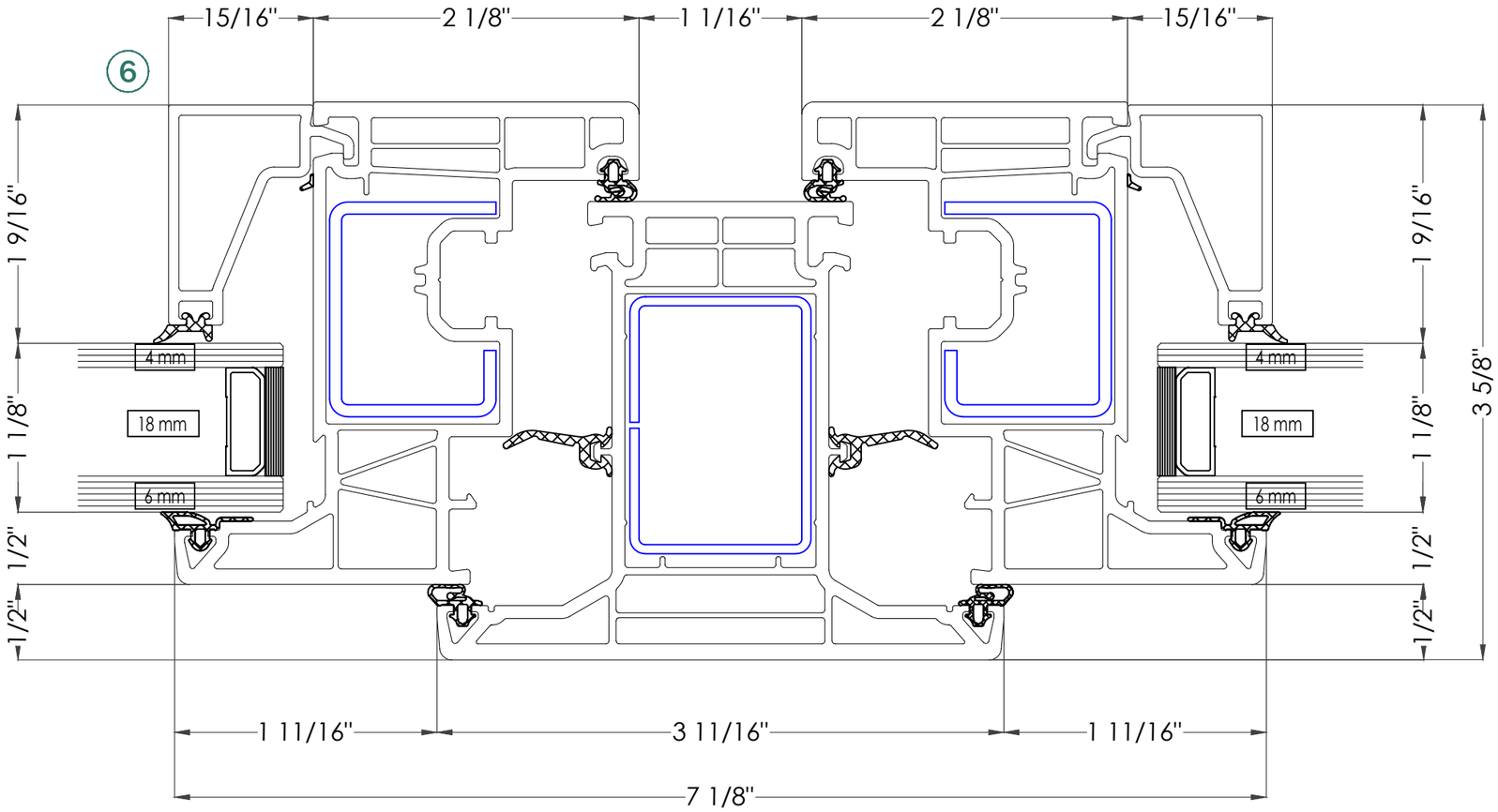

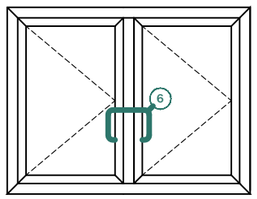

VITROSO DK76 Elegant Infinity

CASEMENT / WINDOWS

vitroso

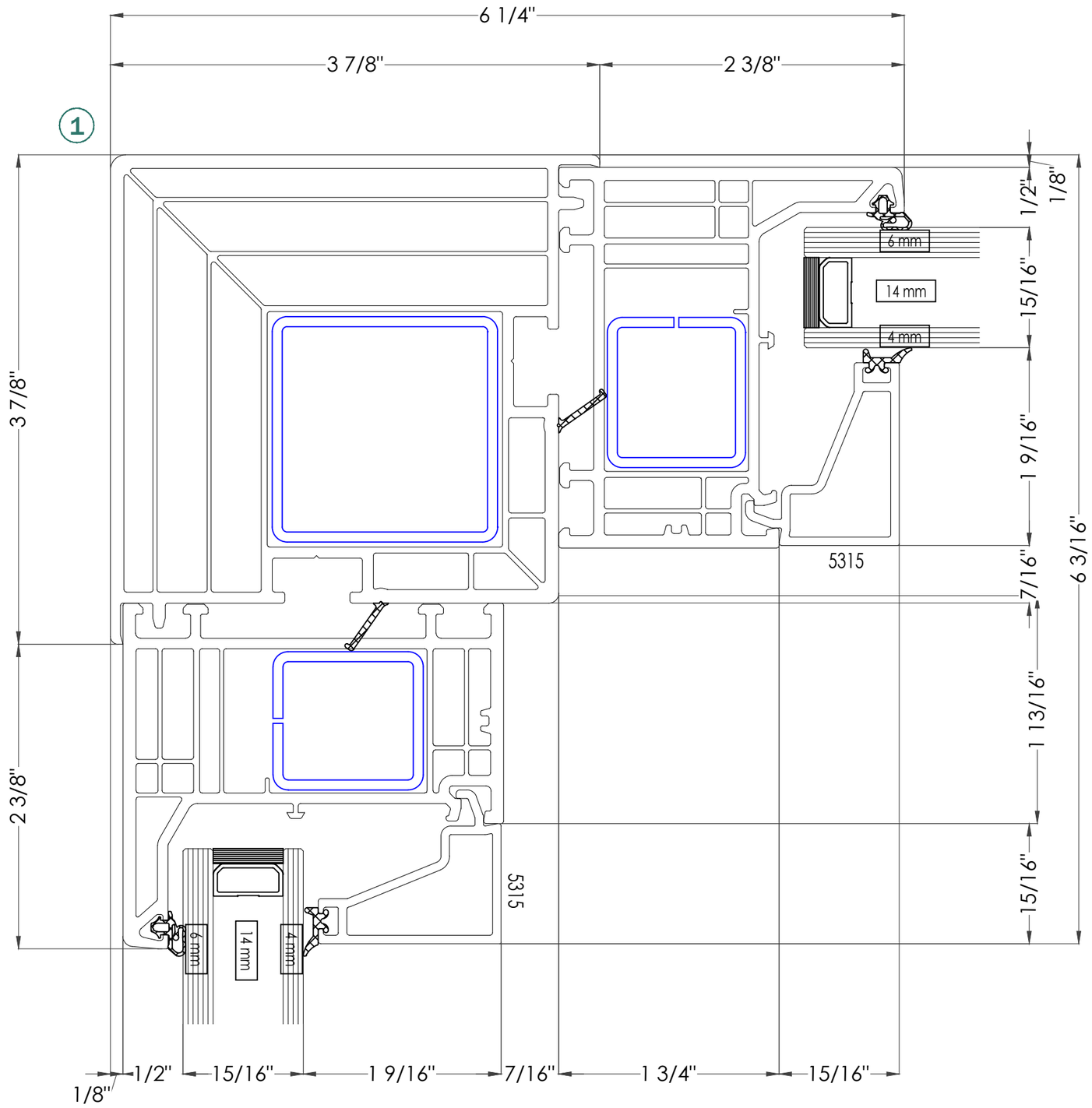

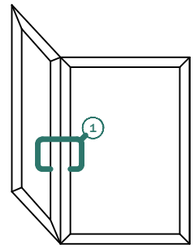

VITROSO DK76 Elegant Infinity

90 ° Corner post

vitroso

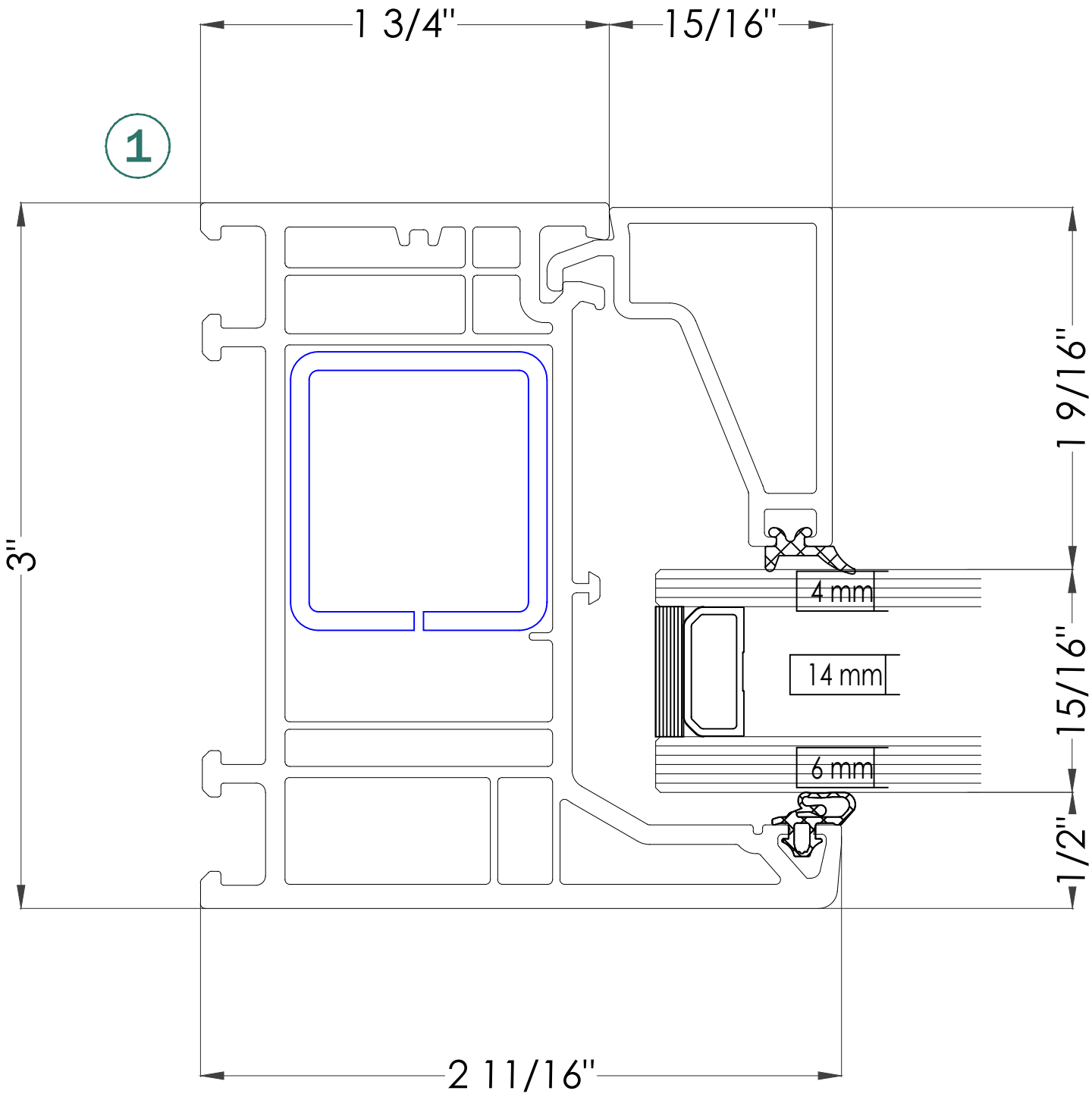

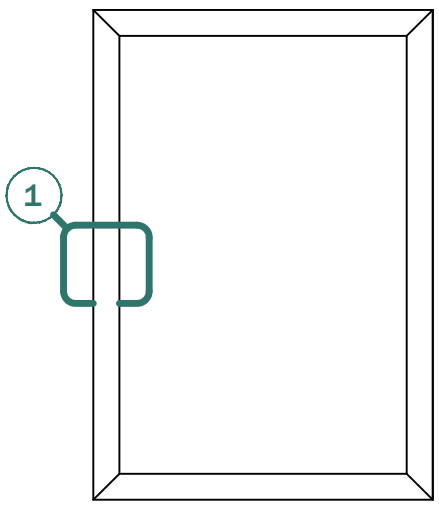

VITROSO DK76 Vision

FIXED WINDOW

vitroso

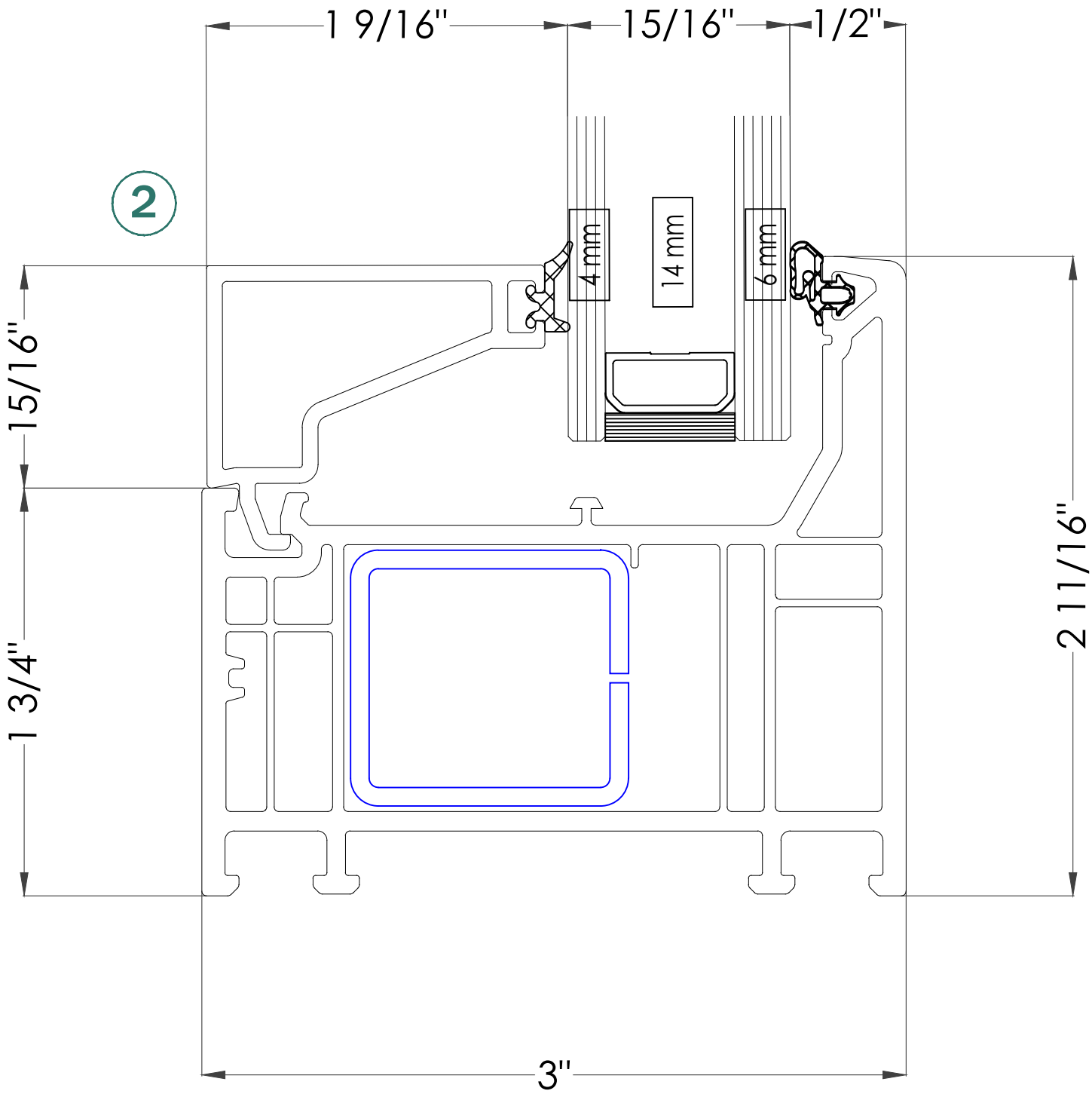

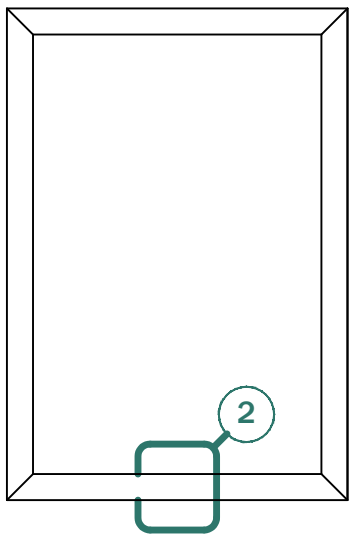

VITROSO DK76 Vision

FIXED WINDOW

vitroso

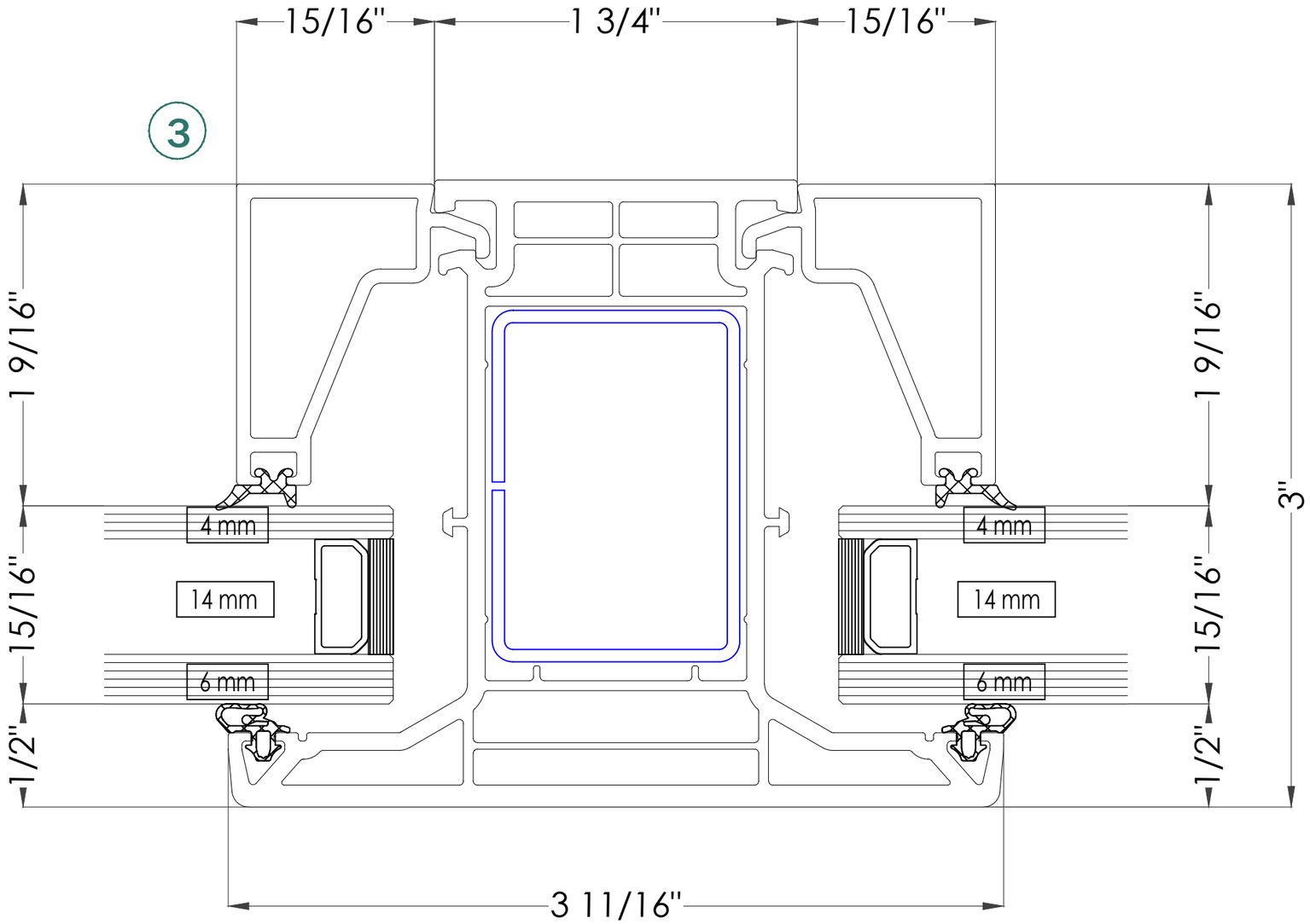

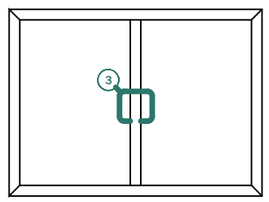

VITROSO DK76 Vision

FIXED WINDOWS

vitroso

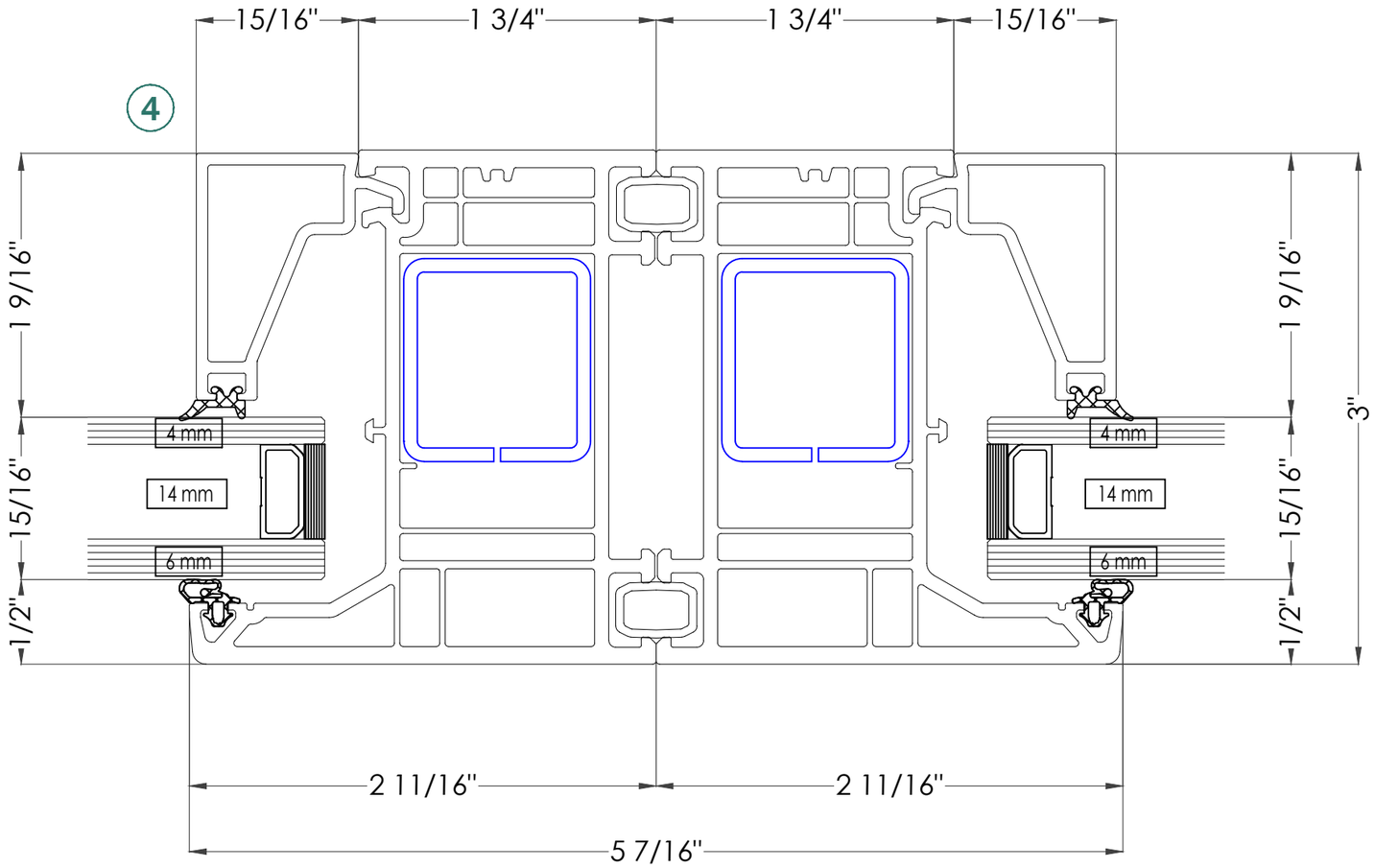

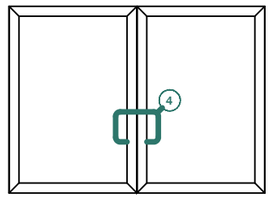

VITROSO DK76 Vision

FIXED WINDOWS

vitroso

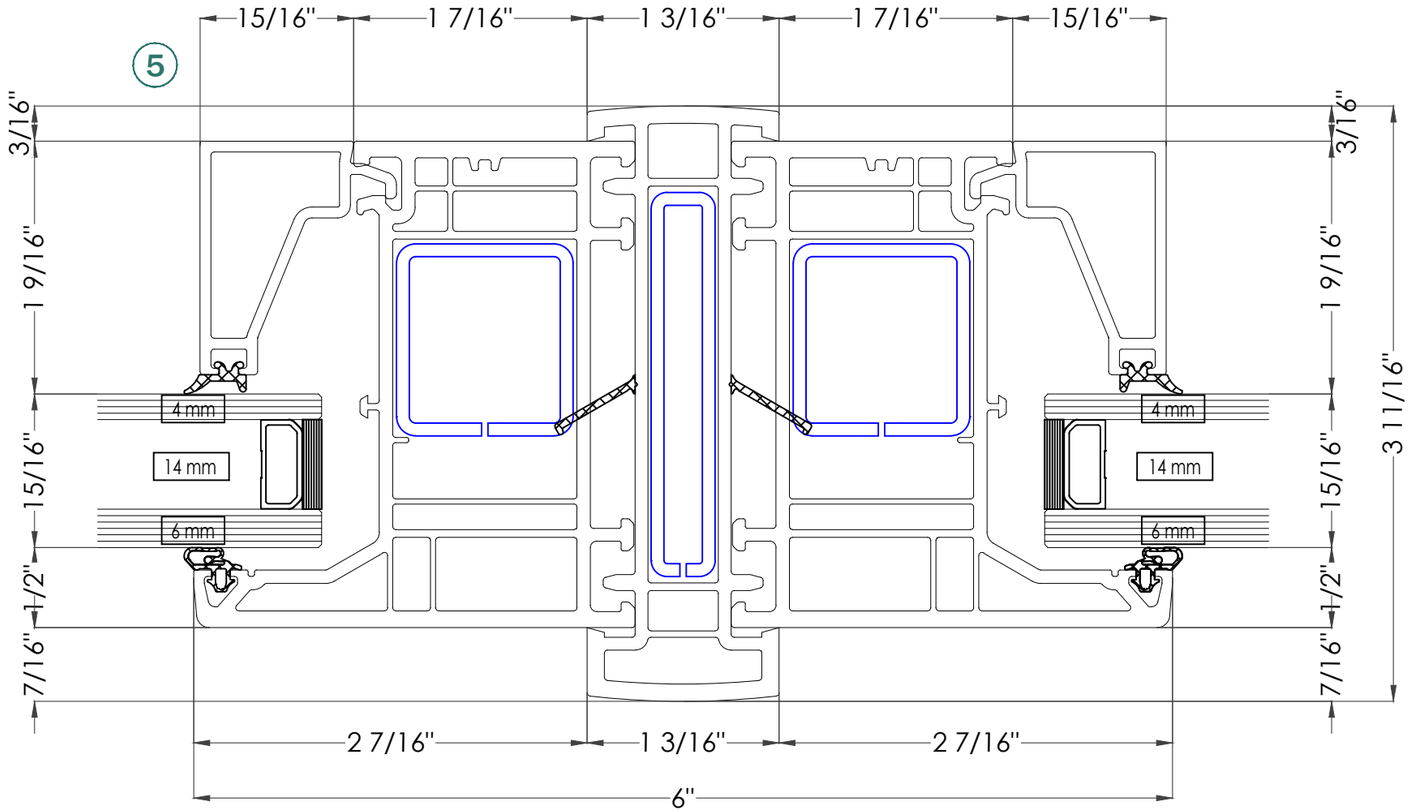

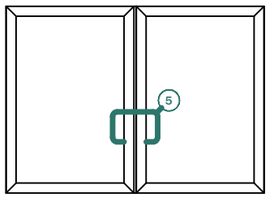

VITROSO DK76 Vision

FIXED WINDOWS

vitroso

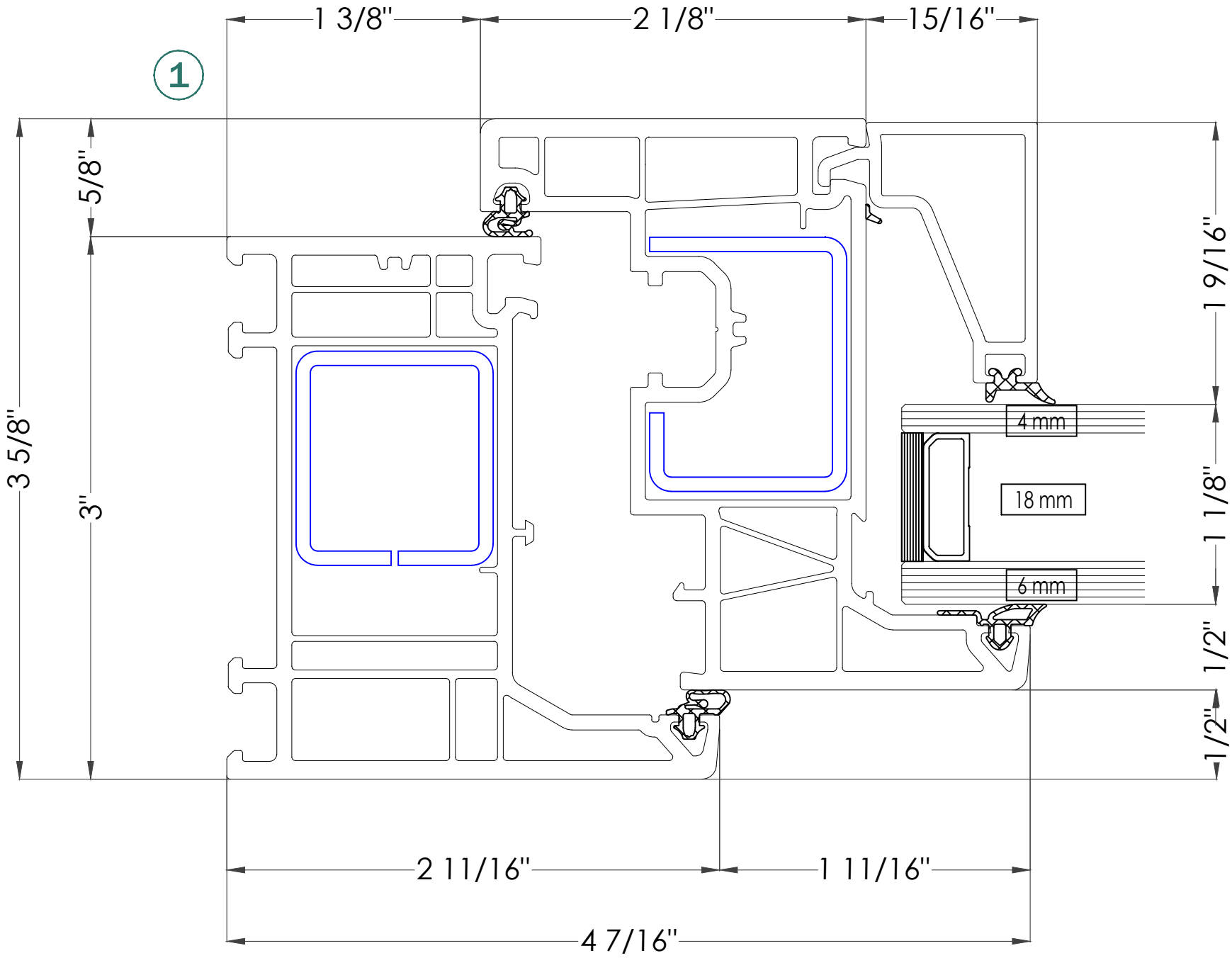

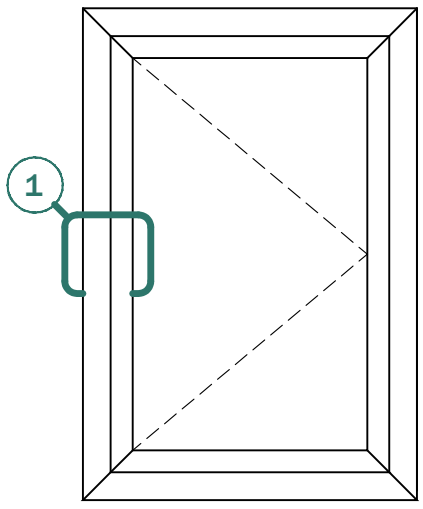

VITROSO DK76 Vision

CASEMENT WINDOW / SWING IN

vitroso

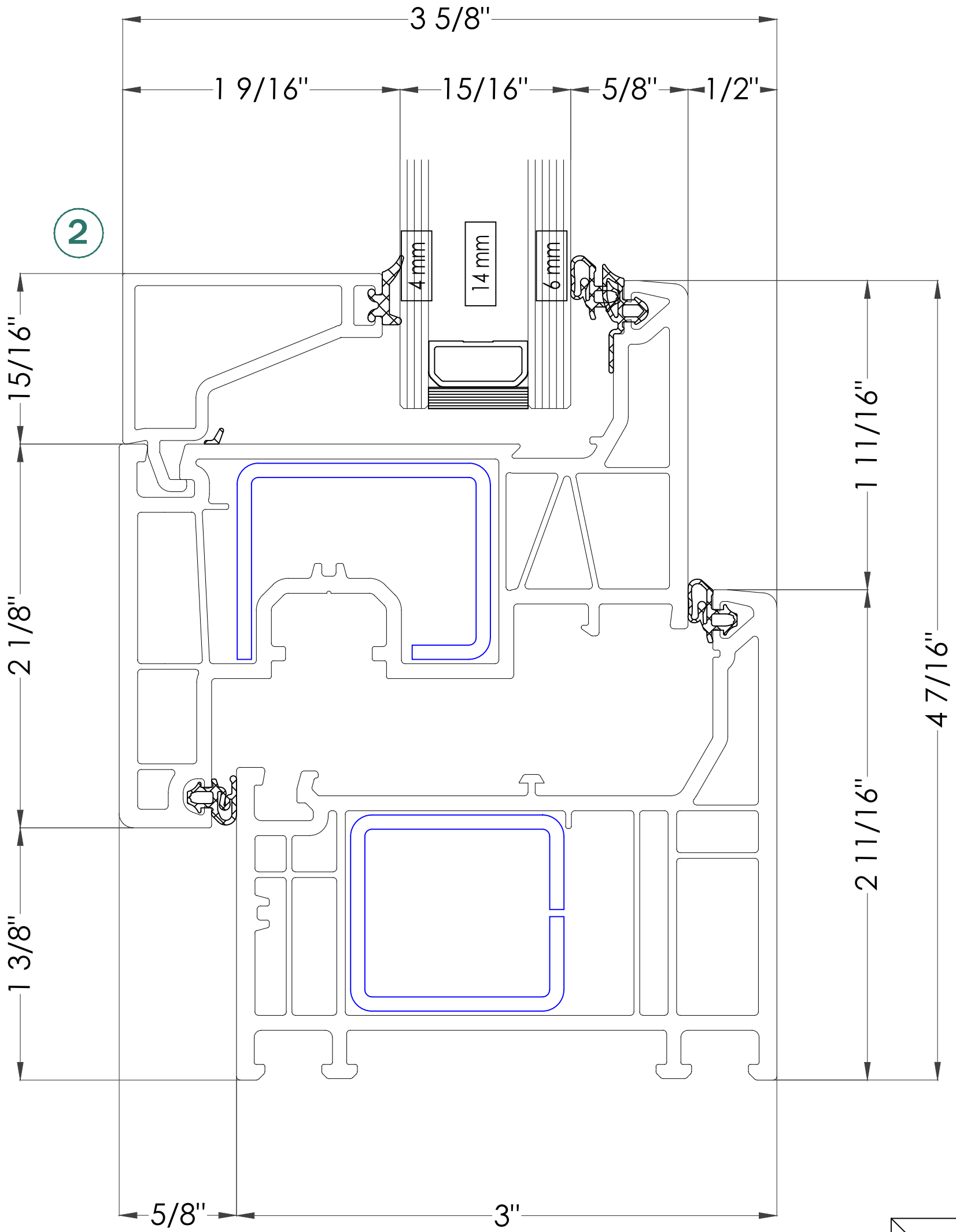

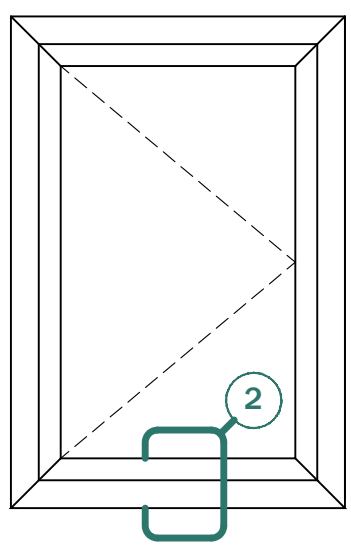

VITROSO DK76 Vision

CASEMENT WINDOW / SWING IN

vitroso

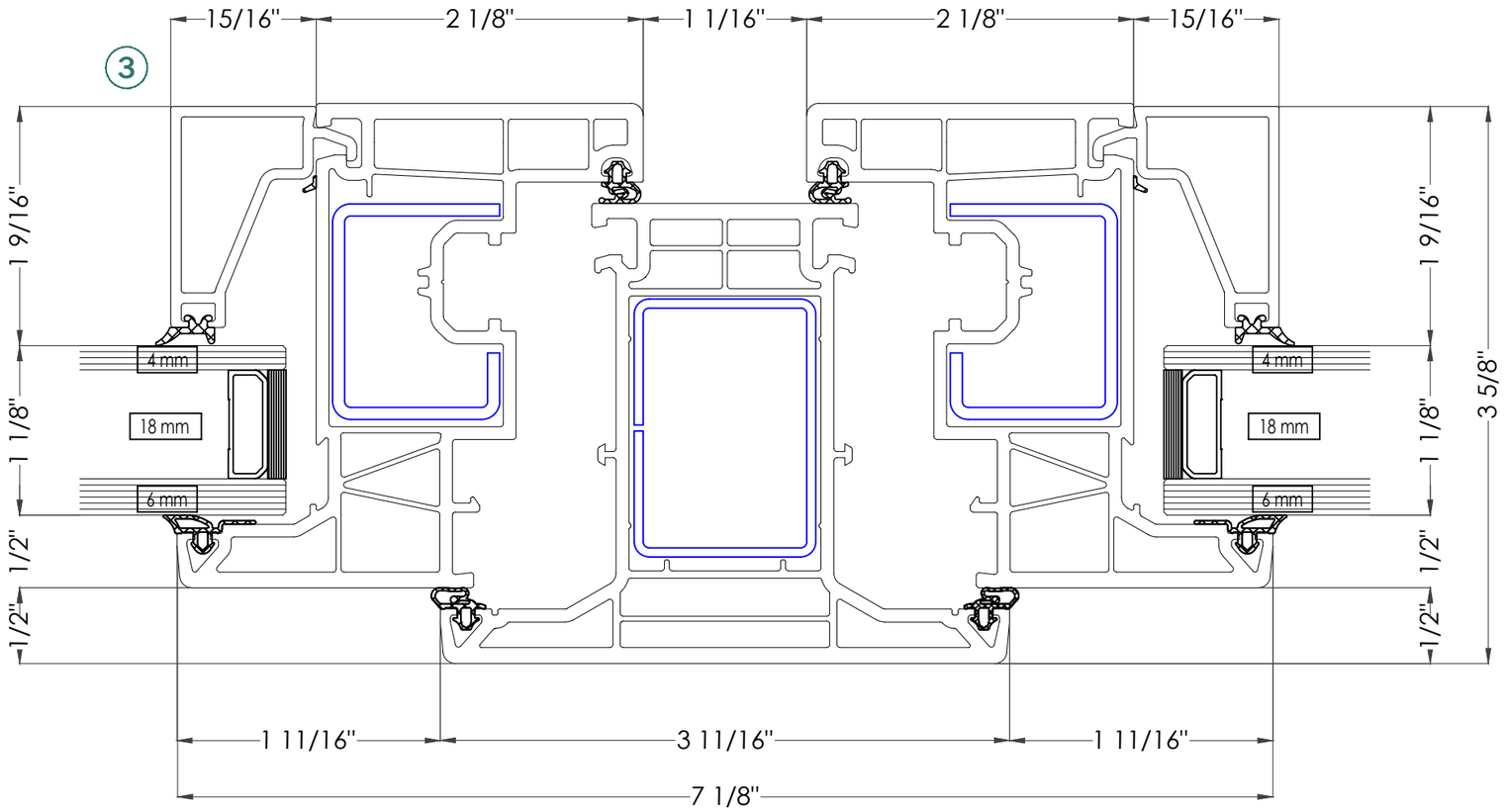

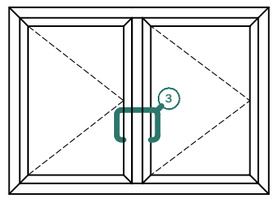

VITROSO DK76 Vision

CASEMENT WINDOWS / SWING IN

vitroso

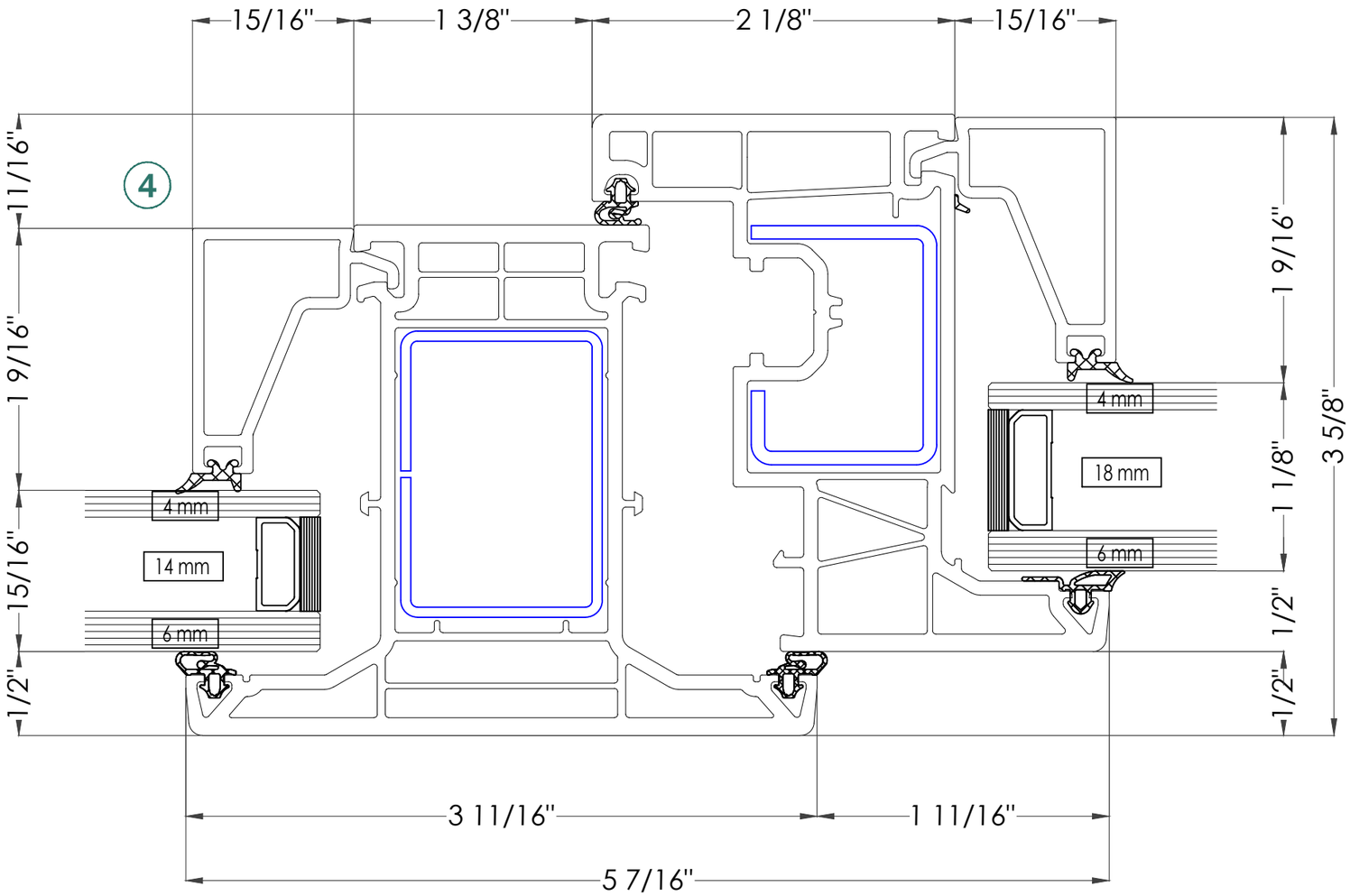

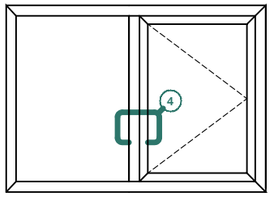

VITROSO DK76 Vision

CASEMENT / SWING IN & FIXED WINDOW

vitroso