DESIGN SERVICES

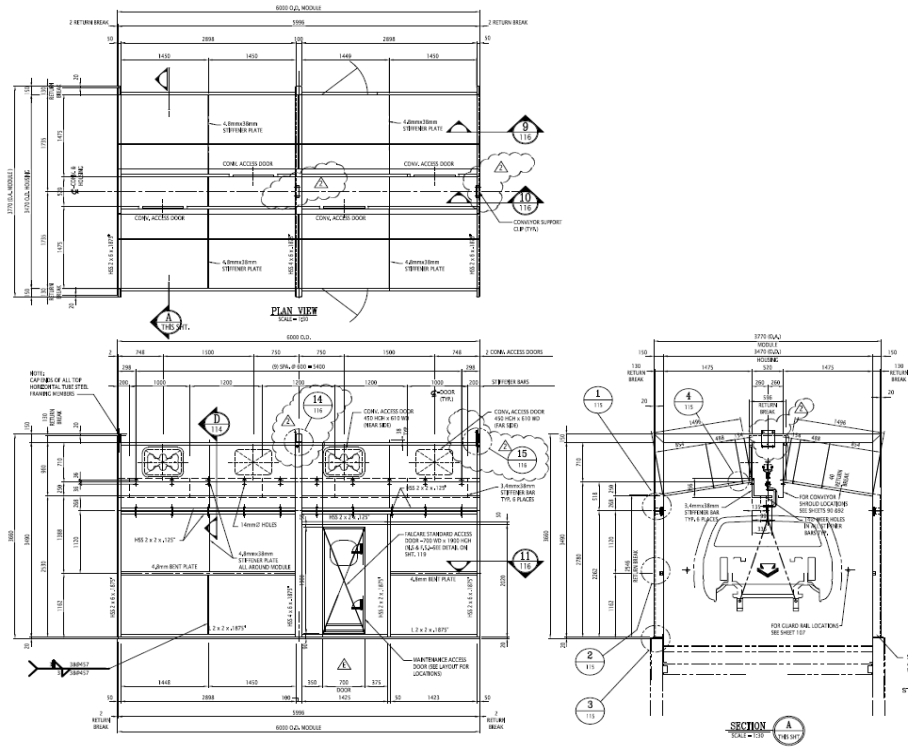

Phosphate Housing Design & Detailing

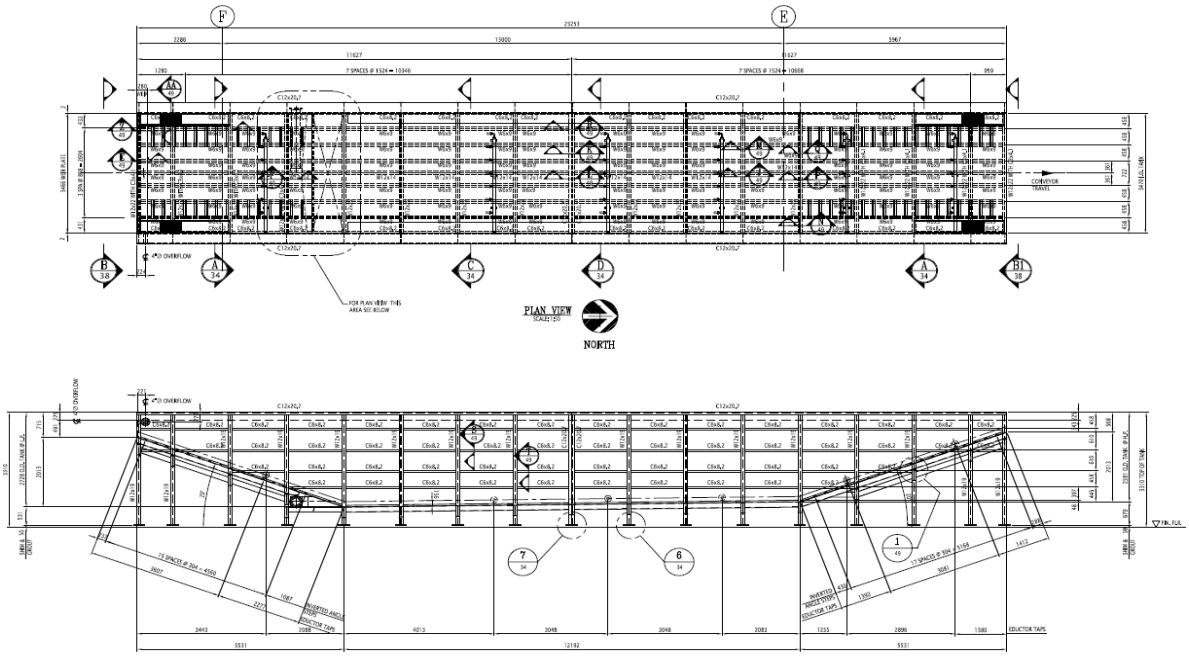

Structural Dip Tank Engineering, Design & Detailing

Davisburg Design, LLC
10315 Deer Ridge Trail ● Holly, Michigan 48442 ● (248) 634-0692 office ● (248) 328-1247 fax