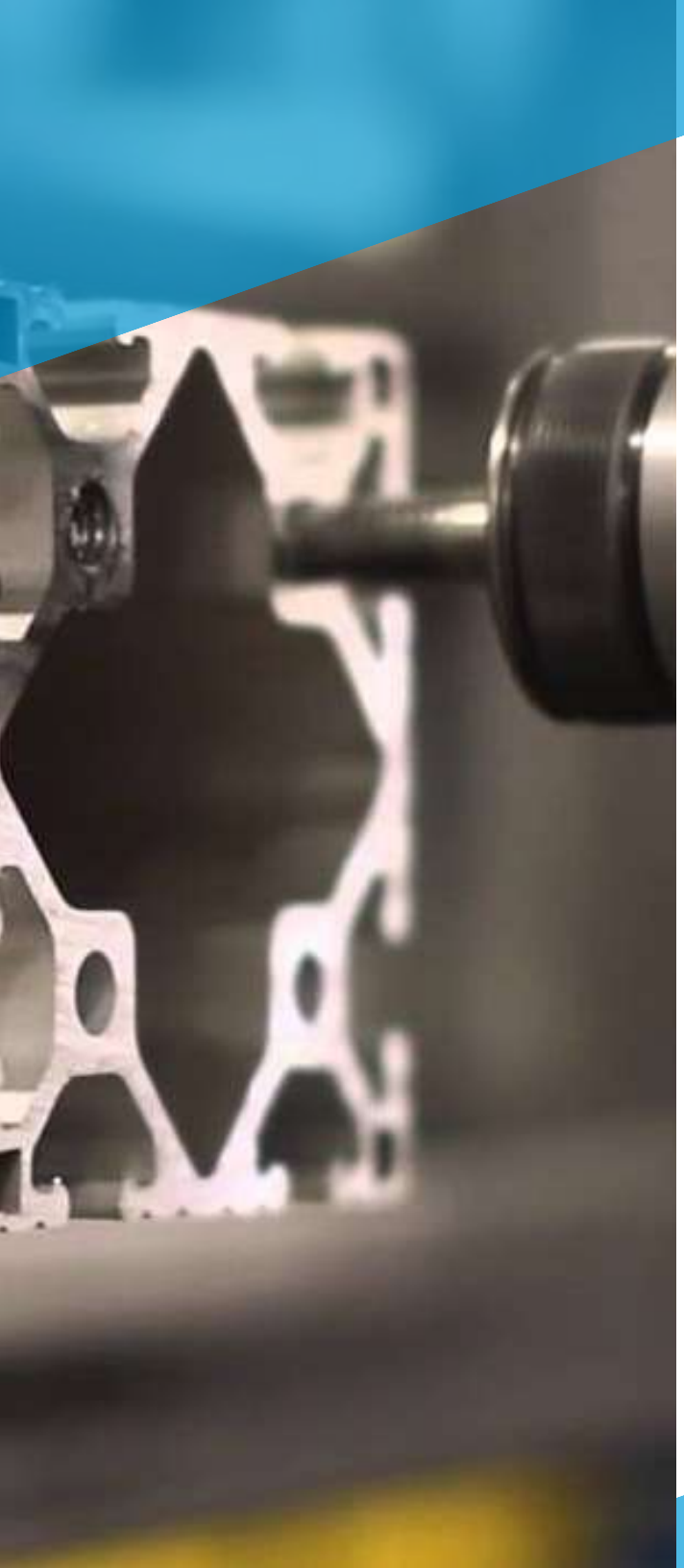

Devol C&O

EOAT'S TOOLING COMPONENTS

T-Slotted Aluminium Profiles

Fractional 15/16/20 series, smooth

OB1515A No.8144

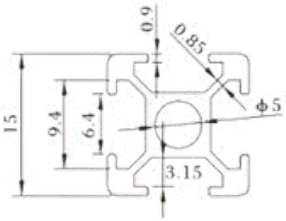

GB1530A No.8001

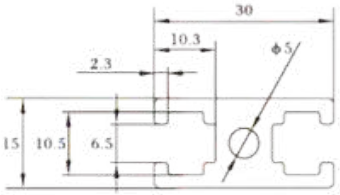

GB1560A No.8003

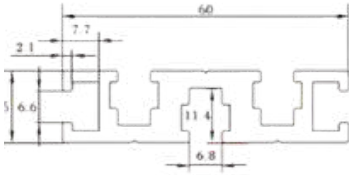

OB1640A No.8005

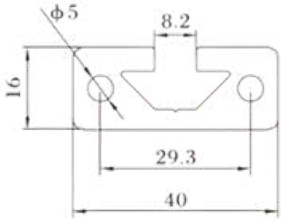

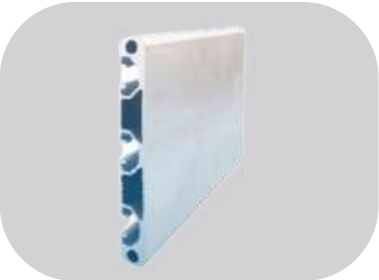

OB16120 No.8157

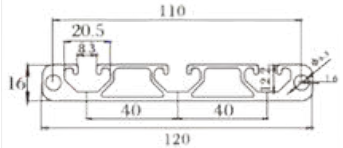

OB2020A No.8007

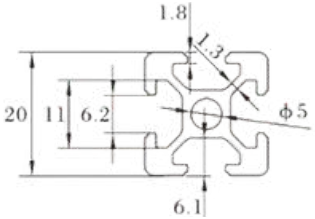

Part No	8144	8001	8003	8005	8157	8007
Material	6105–T5	6105–T5	6105–T5	6105–T5	6105–T5	6105–T5
Finish	Clear Anodized	Clear Anodized	Clear Anodized	Clear Anodized	Clear Anodized	Clear Anodized
Weight Per Meter	0.23kg/m	0.70kg/m	1.28kg/m	1.25kg/m	1.90kg/m	0.48kg/m

T-Slotted Aluminium Profiles

Fractional 20 series, smooth

OB2020V No.8175

GB2020A No.8009

OB2020R No.8149

OB2040A No.8011

OB2040V No.8176

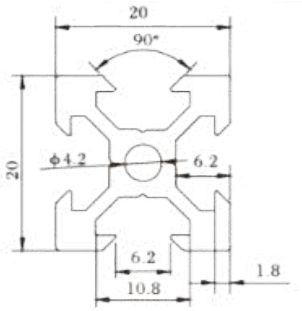

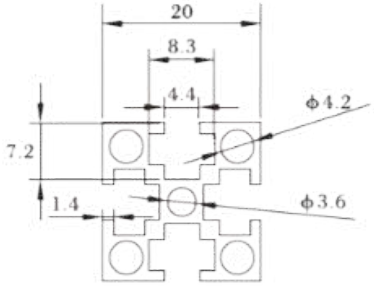

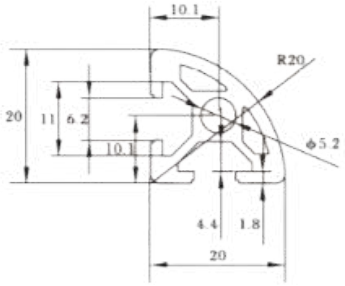

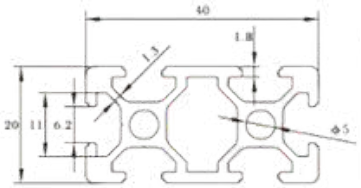

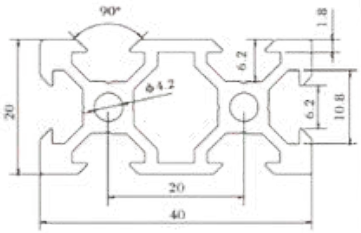

OB2020A No.8007

Part No	8175	8009	8149	8011	8176	8013
Material	6105–T5	6105–T5	6105–T5	6105–T5	6105–T5	6105–T5
Finish	Clear Anodized	Clear Anodized	Clear Anodized	Clear Anodized	Clear Anodized	Clear Anodized
Weight Per Meter	0.46kg/m	0.46kg/m	0.46kg/m	0.81kg/m	0.78kg/m	1.22kg/m

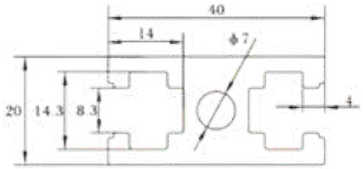

T-Slotted Aluminium Profiles

Fractional 25 series, smooth

OB2060A No.8146

OB2080A No.8015

OB2080V No.8177

OB2525A No.8017

OB2525E1V No.8147

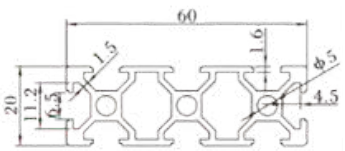

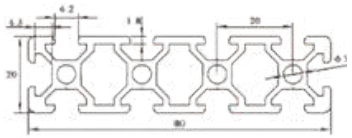

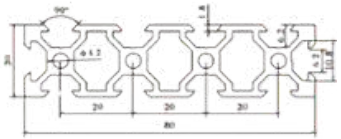

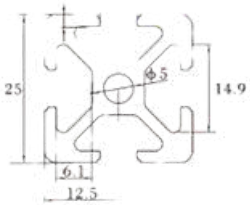

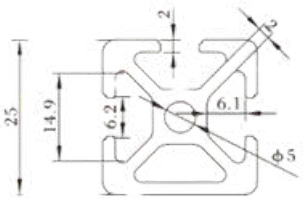

OB2525E2 No.8148

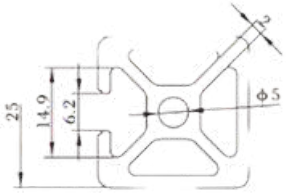

Part No	8146	8015	8177	8017	8147	8148
Material	6105–T6	6105–T5	6105–T5	6105–T5	6105–T5	6105–T5
Finish	Clear Anodized	Clear Anodized	Clear Anodized	Clear Anodized	Clear Anodized	Clear Anodized
Weight Per Meter	1.15kg/m	1.60kg/m	1.36kg/m	0.75kg/m	0.80kg/m	0.84kg/m

T-Slotted Aluminium Profiles

Fractional 25/30 series, smooth

OB2525E2Q No.8150

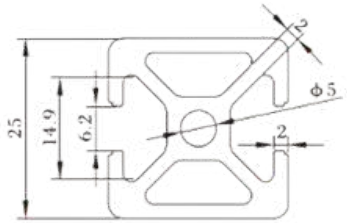

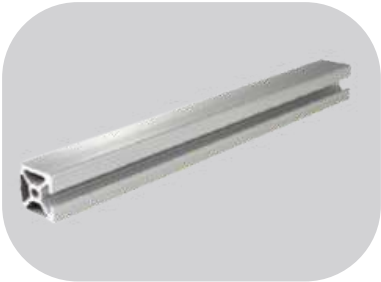

OB2525E3 No.8151

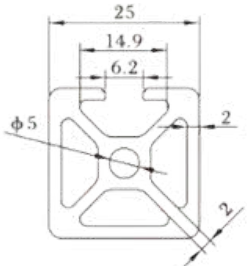

OB2525R No.8152

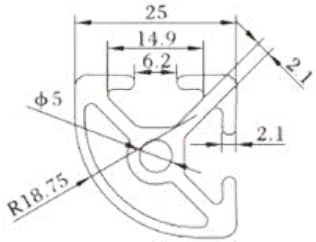

OB2514A No.8153

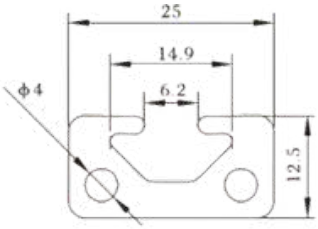

OB2550A No.8019

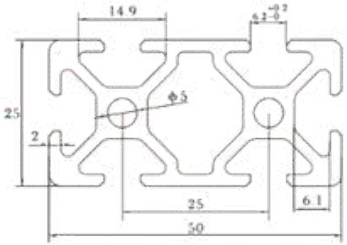

OB5013A No.8154

Part No	8150	8151	8152	8153	8019	8154
Material	6105–T5	6105–T5	6105–T5	6105–T5	6105–T5	6105–T5
Finish	Clear Anodized	Clear Anodized	Clear Anodized	Clear Anodized	Clear Anodized	Clear Anodized
Weight Per Meter	0.84kg/m	0.88kg/m	0.69kg/m	0.59kg/m	1.31kg/m	1.0kg/m

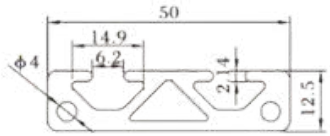

T-Slotted Aluminium Profiles

Fractional 30 series, smooth

OB3030A No.8021

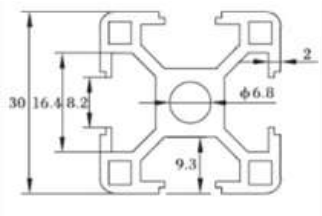

GB3030A No.8023

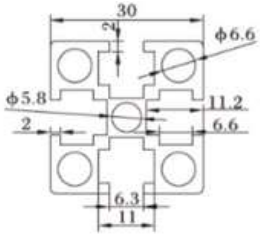

GB3030B No.8025

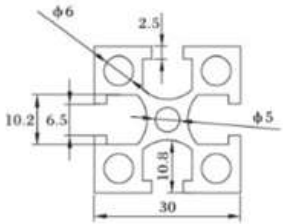

OB3030-25R No.8172

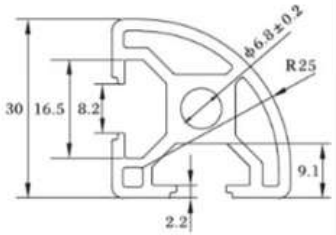

OB3030R No.8027

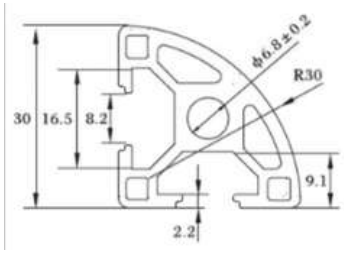

OB3060A No.8029

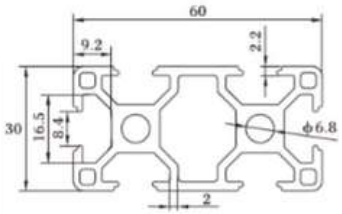

Part No	8021	8023	8025	8172	8027	8029
Material	6105–T5	6105–T5	6105–T5	6105–T5	6105–T5	6105–T5
Finish	Clear Anodized	Clear Anodized	Clear Anodized	Clear Anodized	Clear Anodized	Clear Anodized
Weight Per Meter	0.88kg/m	1.15kg/m	1.1kg/m	0.88kg/m	0.88kg/m	1.61kg/m

T-Slotted Aluminium Profiles

Fractional 30/40 series, smooth

GB3060A No.8031

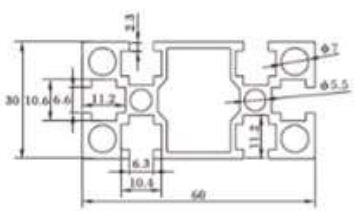

GB3060B No.8034

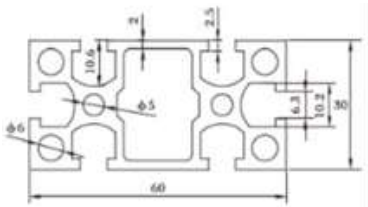

GB3060C No.8125

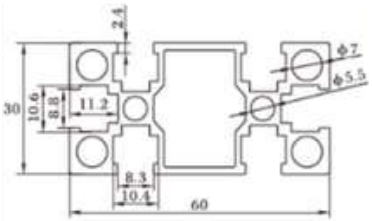

OB3090A No.8036

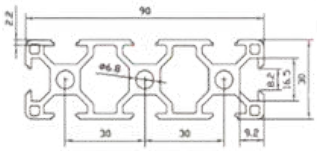

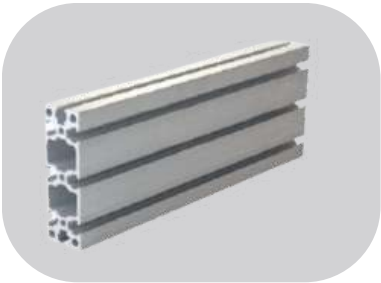

GB3090A No.8039

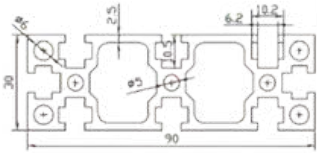

GB3090B No.8126

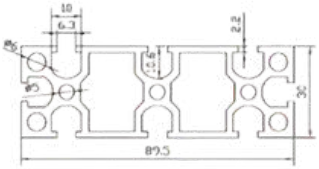

Part No	8031	8034	8125	8036	8039	8126
Material	6105–T5	6105–T5	6105–T5	6105–T5	6105–T5	6105–T5
Finish	Clear Anodized	Clear Anodized	Clear Anodized	Clear Anodized	Clear Anodized	Clear Anodized
Weight Per Meter	1.48kg/m	1.83kg/m	1.40kg/m	2.22kg/m	2.60kg/m	2.42kg/m

T-Slotted Aluminium Profiles

Fractional 40 series, smooth

OB4040A No.8040

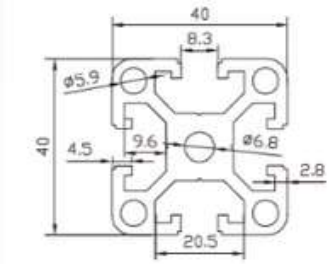

OB4040B No.8042

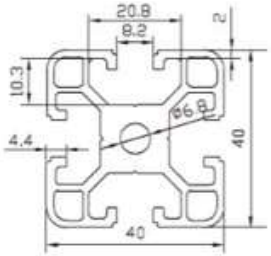

OB4040C No.8044

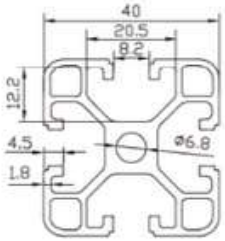

OB4040D No.8174

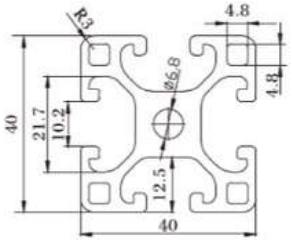

OB4040F No.8156

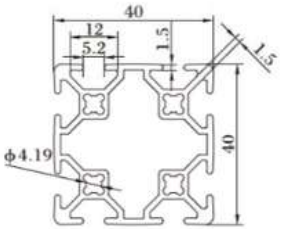

OB4040A No.8046

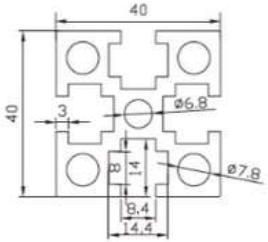

Part No	8040	8042	8044	8174	8156	8046
Material	6105–T5	6105–T5	6105–T5	6105–T5	6105–T5	6105–T5
Finish	Clear Anodized	Clear Anodized	Clear Anodized	Clear Anodized	Clear Anodized	Clear Anodized
Weight Per Meter	1.90kg/m	1.58kg/m	1.33kg/m	1.72kg/m	1.18kg/m	1.94kg/m

T-Slotted Aluminium Profiles

Fractional 40/45 series, smooth

OB4040E2 No.8058

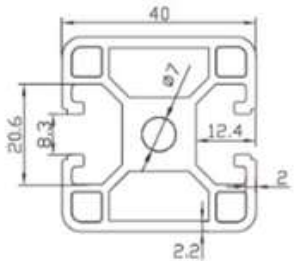

OB4040E3 No.8155

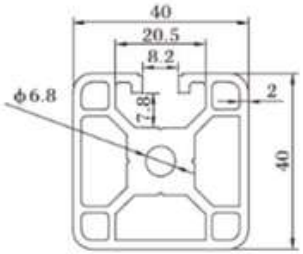

OB4040L No.8130

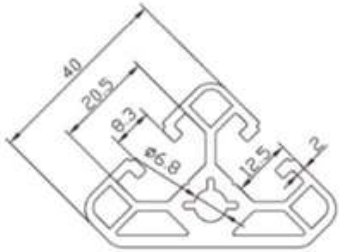

OB4060A No.8060

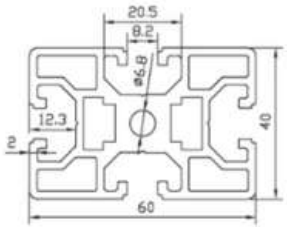

OB4080A No.8062

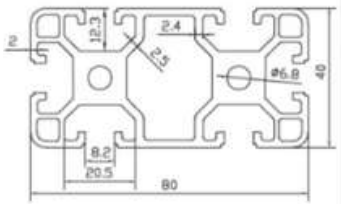

OB4080C No.8064

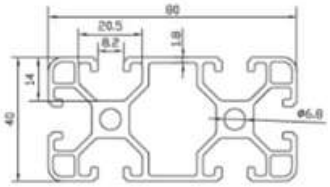

Part No	8058	8155	8130	8060	8062	8064
Material	6105–T5	6105–T5	6105–T5	6105–T5	6105–T5	6105–T5
Finish	Clear Anodized	Clear Anodized	Clear Anodized	Clear Anodized	Clear Anodized	Clear Anodized
Weight Per Meter	1.70kg/m	1.79kg/m	1.40kg/m	2.63kg/m	3.0kg/m	2.30kg/m

T-Slotted Aluminium Profiles

Fractional 40/45 series, smooth

OB4080V No.8178

GB4080A No.8066

GB4080B No.8068

OB40120A No.8070

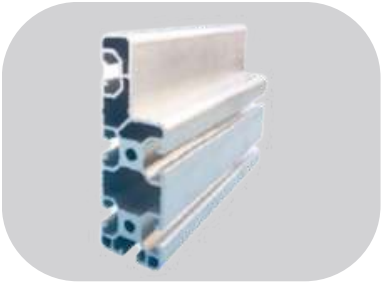

OB40120G No.8158

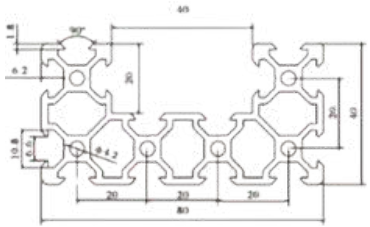

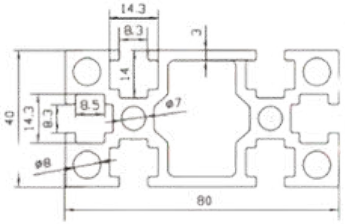

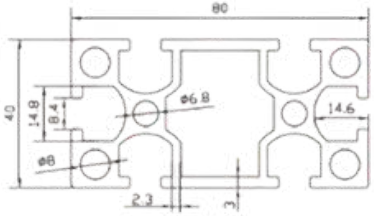

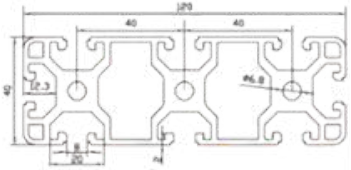

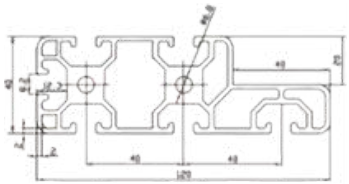

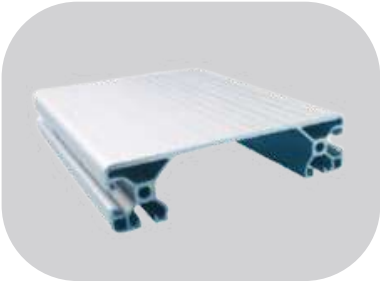

OB40160G No.8159

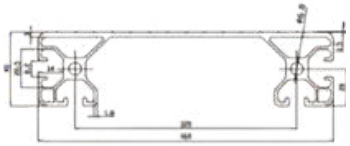

Part No	8178	8066	8068	8070	8158	8159
Material	6105–T5	6105–T5	6105–T5	6105–T5	6105–T5	6105–T5
Finish	Clear Anodized	Clear Anodized	Clear Anodized	Clear Anodized	Clear Anodized	Clear Anodized
Weight Per Meter	1.96kg/m	3.29kg/m	2.95kg/m	4.4kg/m	3.7kg/m	3.2kg/m

T-Slotted Aluminium Profiles

Fractional 45/50 series, smooth

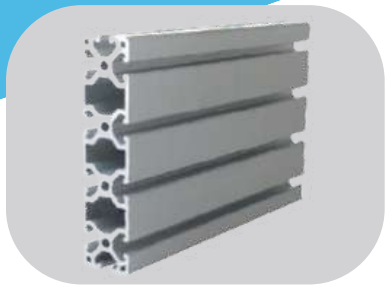

OB40160A No.8140

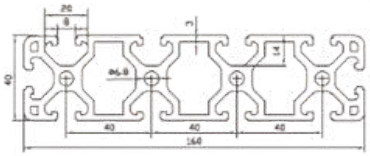

GB40240G No.8160

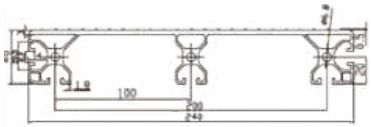

GB4545A No.8132

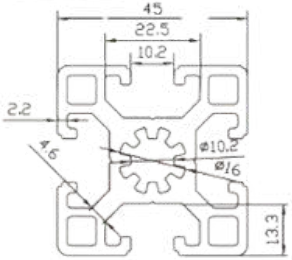

OB4545B No.8072

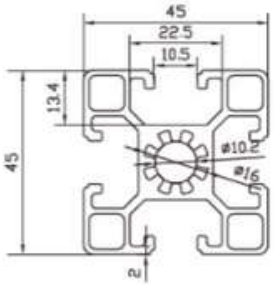

OB4545C No.8074

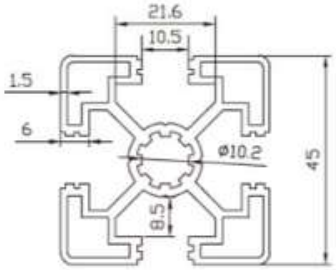

OB4545D No.8076

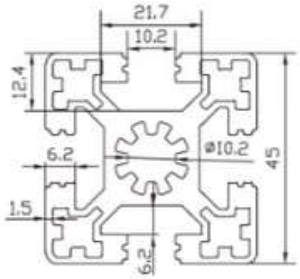

Part No	8140	8160	8132	8072	8074	8076
Material	6105–T5	6105–T5	6105–T5	6105–T5	6105–T5	6105–T5
Finish	Clear Anodized	Clear Anodized	Clear Anodized	Clear Anodized	Clear Anodized	Clear Anodized
Weight Per Meter	6.3kg/m	4.6kg/m	2.22kg/m	1.75kg/m	1.59kg/m	2.35kg/m

T-Slotted Aluminium Profiles

Fractional 50/60 series, smooth

OB4545R No.8078

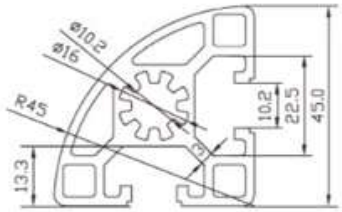

GB4560A No.8080

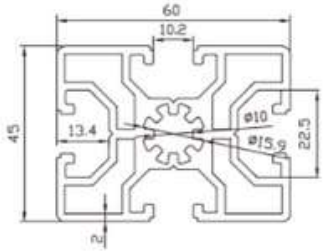

GB4590A No.8082

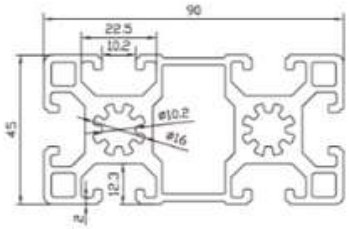

OB4590C No.8084

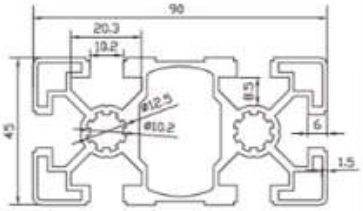

OB5050A No.8086

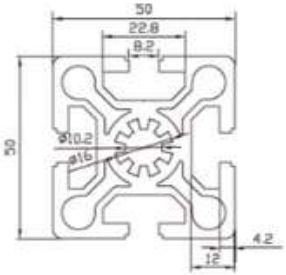

OB5050B No.8088

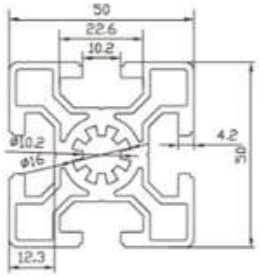

Part No	8078	8080	8082	8084	8086	8088
Material	6105–T5	6105–T5	6105–T5	6105–T5	6105–T5	6105–T5
Finish	Clear Anodized	Clear Anodized	Clear Anodized	Clear Anodized	Clear Anodized	Clear Anodized
Weight Per Meter	1.75kg/m	2.44kg/m	3.75kg/m	3.11kg/m	3.16kg/m	2.5kg/m

T-Slotted Aluminium Profiles

Fractional 60/80 series, smooth

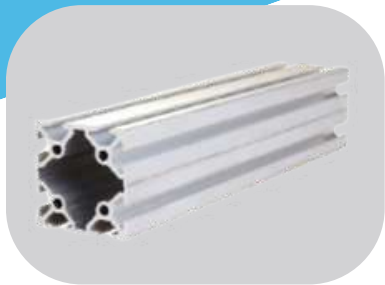

OB5050F No.8164

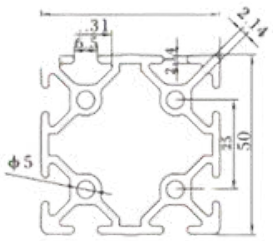

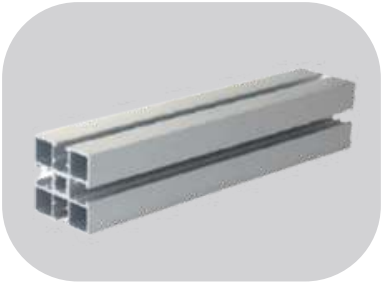

GB5050C No.8090

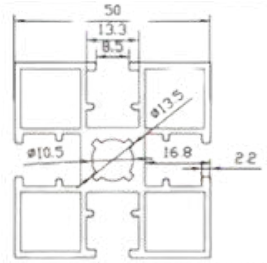

OB50100A No.8092

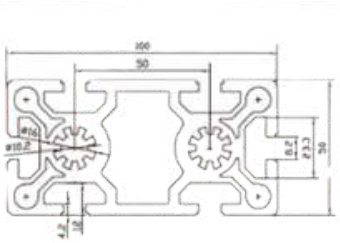

OB50100B No.8094

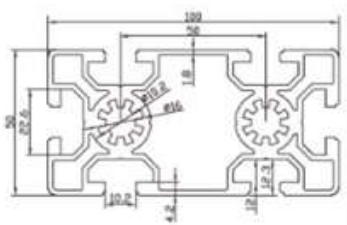

OB6060A No.8096

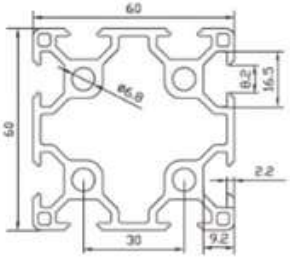

OB6060B No.8098

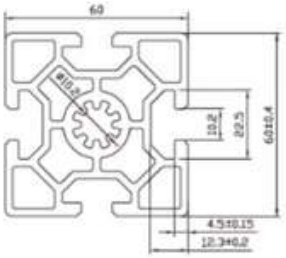

Part No	8164	8090	8092	8094	8096	8098
Material	6105–T5	6105–T5	6105–T5	6105–T5	6105–T5	6105–T5
Finish	Clear Anodized	Clear Anodized	Clear Anodized	Clear Anodized	Clear Anodized	Clear Anodized
Weight Per Meter	2.30kg/m	1.80kg/m	5.35kg/m	4.30kg/m	2.55kg/m	3.85kg/m

T-Slotted Aluminium Profiles

Fractional 80/90 series, smooth

GB6060A No.8100

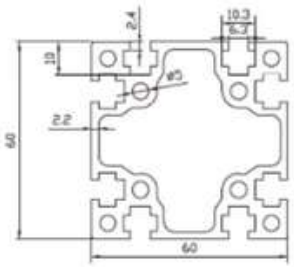

GB6630R No.8102

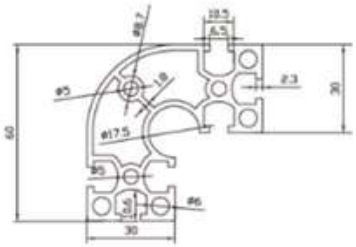

GB6630L No.8104

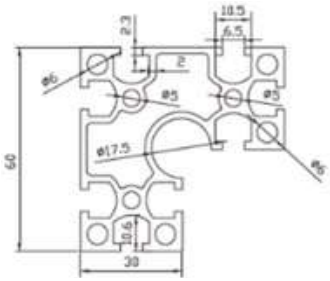

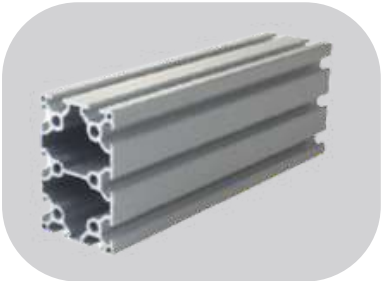

OB6090A No.8106

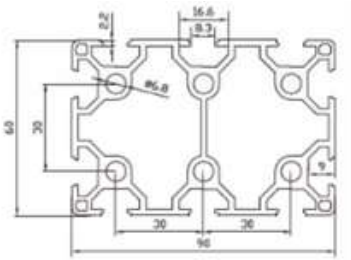

OB60120A No.8008

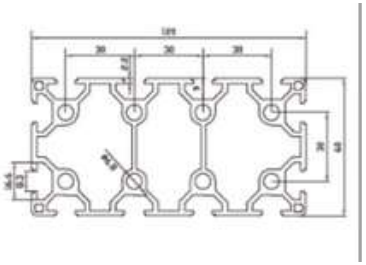

OB8080B No.8110

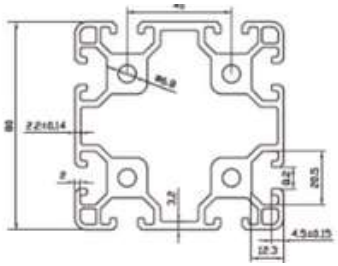

Part No	8100	8102	8104	8106	8108	8110
Material	6105–T5	6105–T5	6105–T5	6105–T5	6105–T5	6105–T5
Finish	Clear Anodized	Clear Anodized	Clear Anodized	Clear Anodized	Clear Anodized	Clear Anodized
Weight Per Meter	2.80kg/m	2.20kg/m	2.50kg/m	3.62kg/m	4.63kg/m	4.86kg/m

T-Slotted Aluminium Profiles

Fractional 90/100 series, smooth

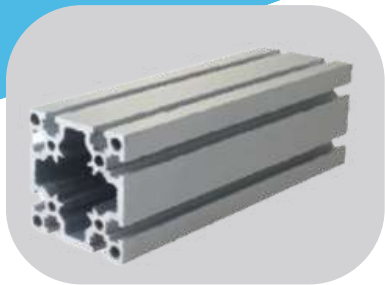

GB8080A No.8134

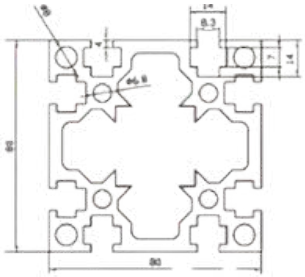

GB80120A No.8112

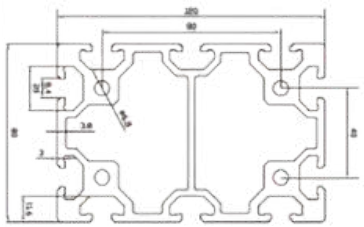

OB80160A No.8114

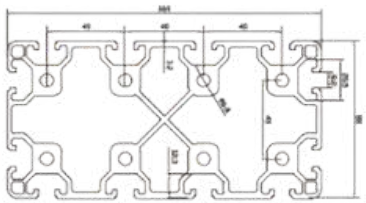

GB8840R No.8116

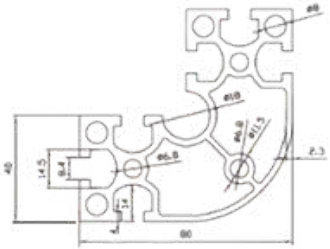

GB8840L No.8118

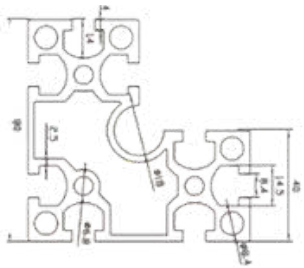

OB9090A No.8120

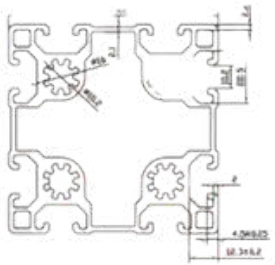

Part No	8134	8112	8114	8116	8118	8120
Material	6105–T5	6105–T5	6105–T5	6105–T5	6105–T5	6105–T5
Finish	Clear Anodized	Clear Anodized	Clear Anodized	Clear Anodized	Clear Anodized	Clear Anodized
Weight Per Meter	6.15kg/m	7.85kg/m	10.0kg/m	3.90kg/m	4.44kg/m	5.85kg/m

T-Slotted Aluminium Profiles

AUXILIARY MATERIALS 6063-T5

OB9090D No.8138

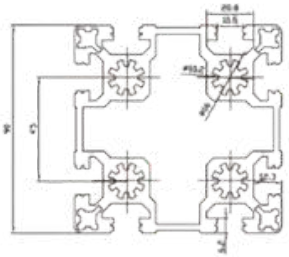

OB100100A No.8122

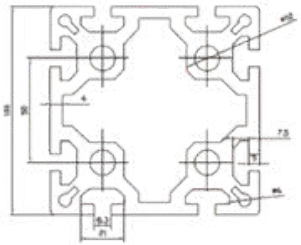

OB100100B No.8136

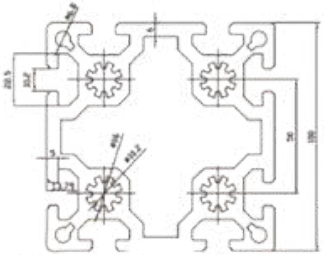

Part No	8138	8122	8136
Material	6105–T5	6105–T5	6105–T5
Finish	Clear Anodized	Clear Anodized	Clear Anodized
Weight Per Meter	6.40kg/m	11.12kg/m	9.90kg/m

T-Slotted Aluminium Profiles

AUXILIARY MATERIALS 6063-T5

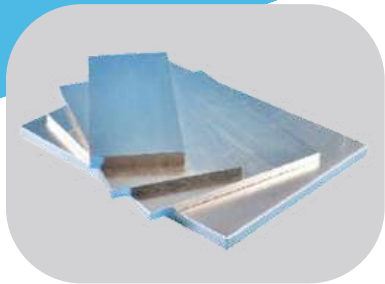

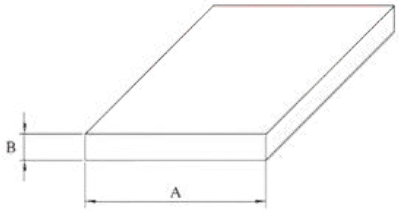

FLAT STOCK

Part No	A	B	Kg/m)
9012	18	4	0.22
9013	28	4	0.34
9014	38	6	0.67
9015	42	6	0.75
9016	60	4	0.71
9017	60	12	2.21
9018	60	15	2.65
9019	80	6	1.42
9020	80	12	2.84
9021	80	15	3.57
9022	80	19	4.52
9023	90	4	1.16
9024	100	4	1.21
9025	100	12	3.57
9026	100	19	5.67
9027	120	4	1.47
9028	120	6	2.21
9029	135	6	2.42
9030	160	6	2.84

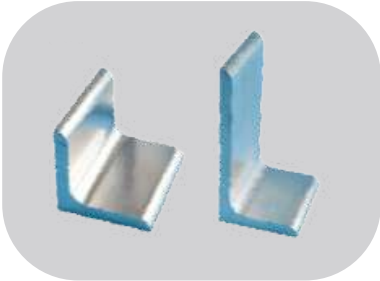

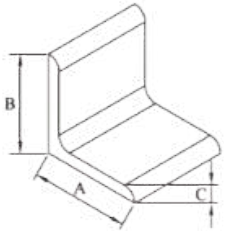

ANGLE STOCK

Part No	A	B	C	(Kg/m)
9001	25	25	3	0.39
9002	25	50	4	0.77
9003	30	30	4	0.47
9004	30	60	4	0.93
9005	40	40	6	1.26
9006	40	80	6	1.91
9008	50	50	4	1.05
9009	60	60	4	1.27
9010	80	80	6	2.73

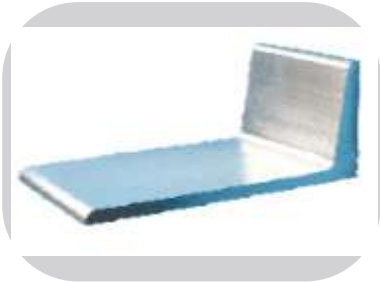

ANGLE PROFILES

Part No	A	B	C	(Kg/m)
9011	140	56	6	3.67kg/m

T-Slotted Aluminium Profiles

AUXILIARY MATERIALS 6063-T5

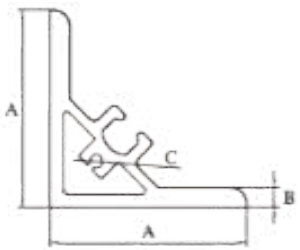

ANGLE PROFILES

Part No	A	B	C	(Kg/m)
9049	60	6	4.2	2.3kg/m

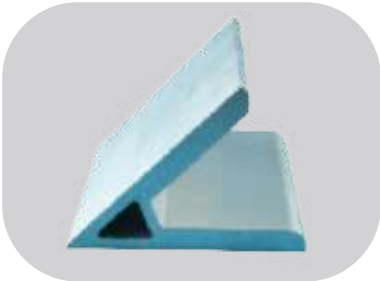

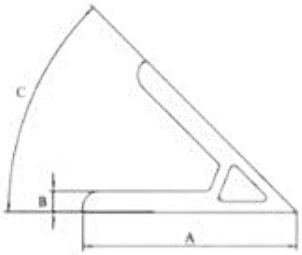

45º GUSSET PROFILES

Part No	A	B	C	(Kg/m)
9047	60	6	45º	1.7kg/m

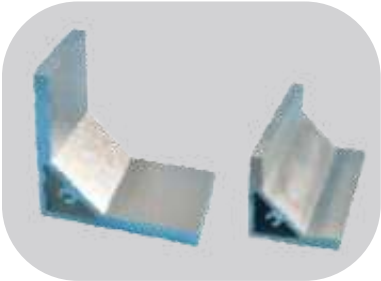

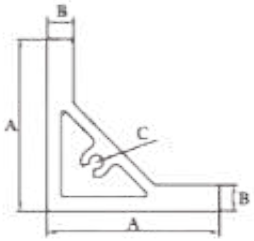

ANGLE PROFILES

Part No	A	B	C	(Kg/m)
9135	35	5	4.2	1.17Kg/m

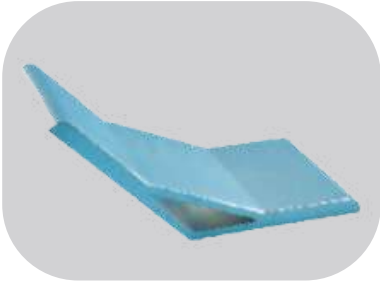

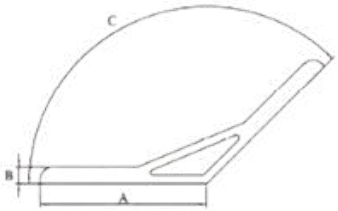

135º GUSSET PROFILES

Part No	A	B	C	(Kg/m)
9048	60	6	135º	2.04kg/m

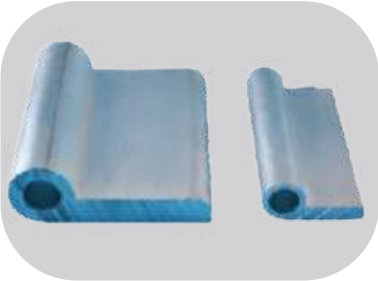

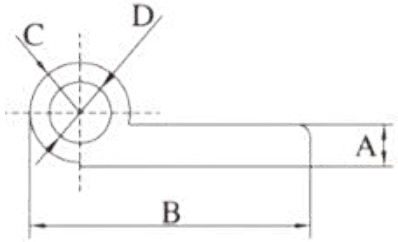

HINGE PROFILES

Part No	A	B	C	D	(Kg/m)
9038	3.5	23	R4.8	ϕ7	0.23
9039	4	30	R5.3	ϕ7	0.38
9040	5.5	36.5	R6.5	ϕ8	0.59
9041	5.5	42	R6.5	ϕ8	0.65
9124	6	37.4	R7.35	ϕ8.3	0.80
9125	7	44.6	R7.35	ϕ8.3	1.00

T-Slotted Aluminium Profiles

AUXILIARY MATERIALS 6063-T5

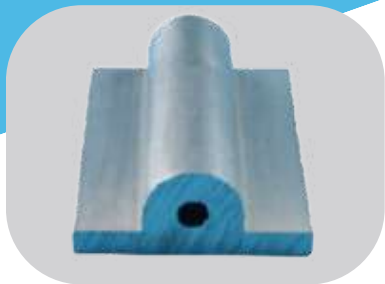

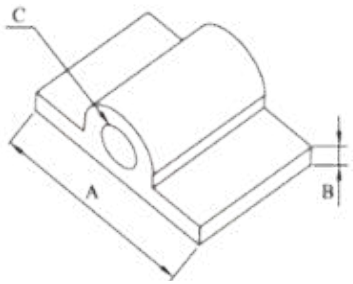

PLUG PROFILES

Part No	A	B	C	(Kg/m)
9115	38	4.5	ϕ5	0.85kg/m

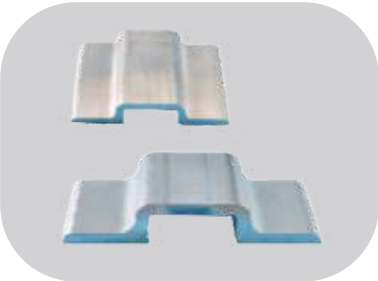

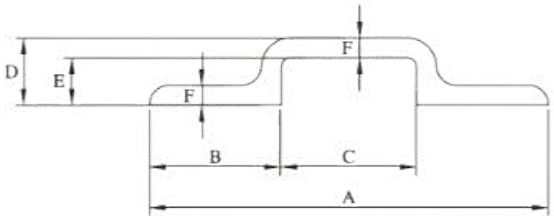

SINGLE & DOUBLE RETAINER

ANGLE PROFILES

Part No	A	B	C	D	E	F	(Kg/m)
9055	60.6	20	20.6	10.2	7.2	3	0.59
9056	90.6	30	30.6	14.6	10.6	4	1.17
9057	120.6	40	40.6	22	16	6	2.43
9058	135.6	45	45.6	23.3	17.3	6	2.71

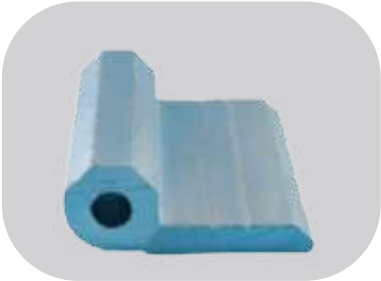

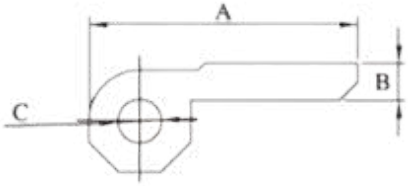

HINGE PROFILES

Part No	A	B	C	(Kg/m)
9135	35	5	4.2	1.17Kg/m

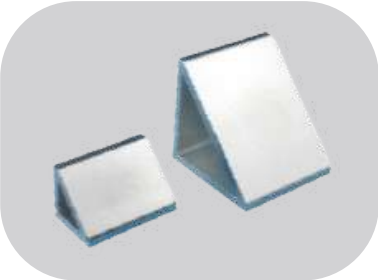

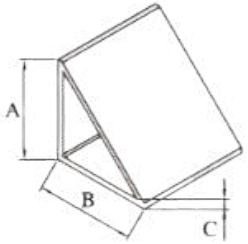

T-TYPE MATERIAL

Part No	A	B	C	(Kg/m)
9031	30	30	4	0.99
9032	40	40	6	1.95
9033	50	50	4	1.74
9034	60	60	4	2.10
9035	80	80	6	4.31

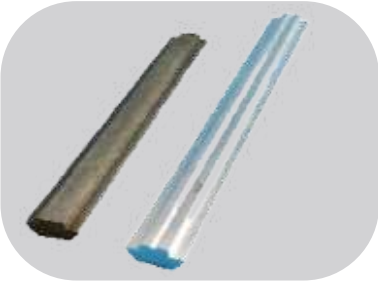

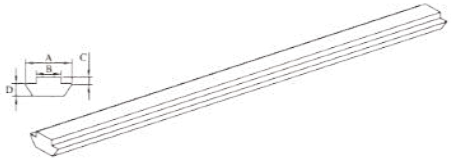

T-TYPE MATERIAL

Part No	A	B	C	D	(Kg/m)	Compatibility
9116	15.5	8	2	4	0.19	Al
9117	15.5	8	2	4	0.63	Steel
9139	9.7	5.9	1	4	0.30	Steel

T-Slotted Aluminium Profiles

AUXILIARY MATERIALS 6063-T5

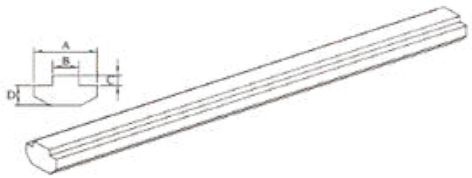

T-TYPE MATERIAL

Part No	A	B	C	D	(Kg/m)	Compatibility
9118	19.5	8	3	6.4	0.38	Al
9144	19.5	10	3	6.2	0.36	Al
9119	18	8	3	6.4	1.16	Steel
9122	19.5	10	5	5.5	1.37	Steel

INSTALLATION IF DIE CASTING CORNER

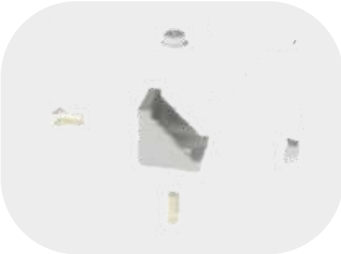

Step 1: confirm that parts are mainly composed of connecting corner parts, t-bolts and flange nuts.

Step 2: put the connecting corner into a T-shaped slot of the profile.

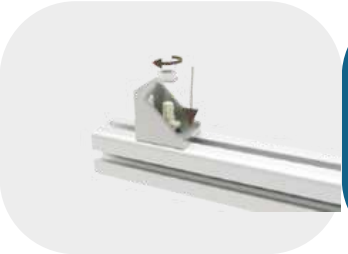

Step 3: screw the T bolt through the corner hole into the flange nut (do not tighten completely).

Step 4: put the matching profile onto the corner piece so that the square faces to the flush side, then p ass the t-bolt through the hole of the corner piece achs crew into the flange nut.

Step 5: use a wrench to tighten the flange nuts until they are securely attached.

1530 B 2 HOLES EXTERNAL BRACKET

DIE-CAST ALUMINIUM, SILVER POWDER COATING

1530 A

1530 B

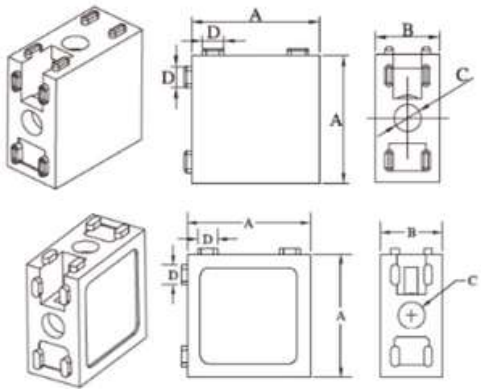

Part No	QTY	Description
5109	2	M6 × 20mm SHCS

Part No	A	B	C	D	kg	Compatibility Code
1176	30	15	ϕ6.5	5	0.023	1530A–6
1050	30	15	ϕ6.5	5	0.021	1530B–6

1850 A 4 HOLES INSIDE CORNER BRACKETS

DIE-CAST ALUMINIUM, BLACK POWDER COATING

1530 A

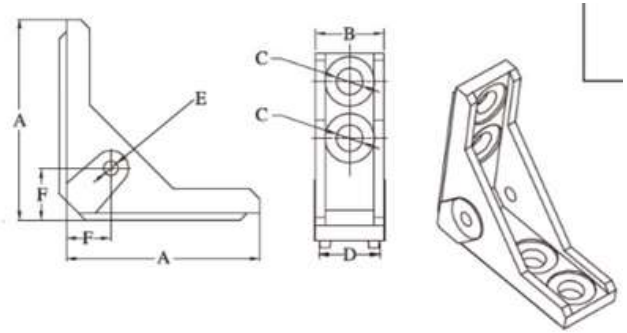

Part No	QTY	Description
5147	4	M6 × 12 SHCS

Part No	A	B	C	D	E	F	kg	Compatibility Code
1023	50	18	ϕ7	16	M4	10	0.026	1850A–16

2020A 2 HOLE EXTERNAL BRACKET

DIE-CAST ALUMINIUM, NATURAL FINISH

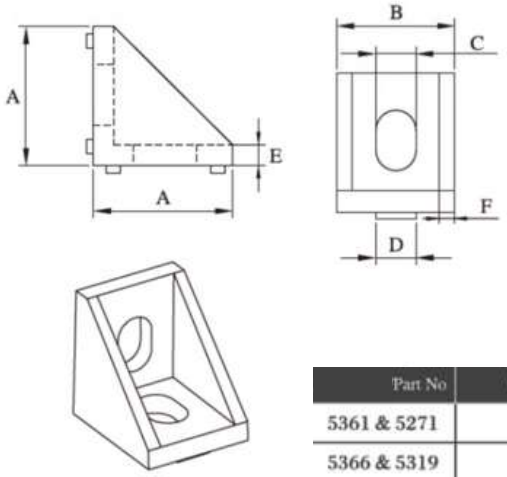

Part No	QTY	Description
5361 & 5271	2	M6×8mm BHSCS & Slide T–Nut
5366 & 5319	2	M4×8mm SHCS & Econ T–Nut

/Part No	A	B	C	D	E	F	kg	Compatibility Code
1001	20	17	ϕ6	4	3	2.2	0.0065	2020A–4

2020 E 2 HOLE INSIDE CORNER BRACKETS

DIE-CAST ALUMINIUM, NATURAL FINISH

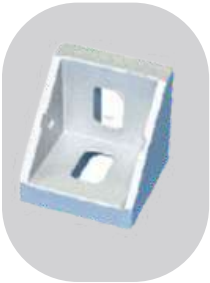

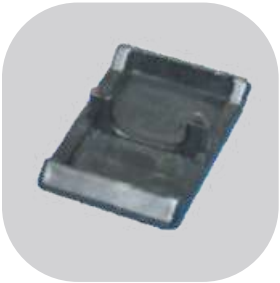

No. 4073

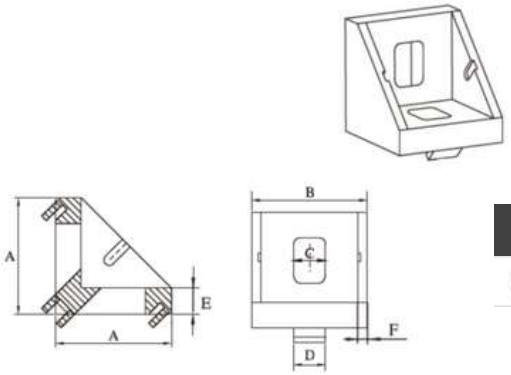

/Part No	QTY	Description
5094 & 5339	2	M5×8mm BHSCS & Econ T–Nut

/Part No	A	B	C	D	E	F	kg	Compatibility Code
1033	18	18	5	5	4	1.5	0.007	2020E–5

2020 F 2 HOLE INSIDE CORNER BRACKETS

DIE-CAST ALUMINIUM OR ZINC, SILVER POWER COATING

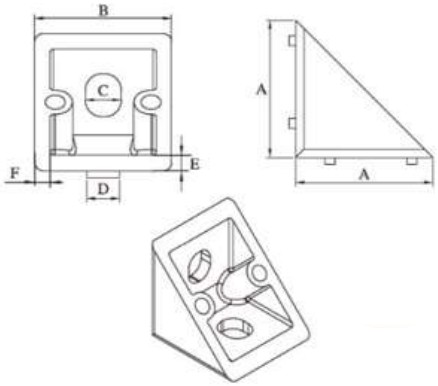

No. 4100

/Part No	QTY	Description
5094 & 5339	2	M5 × 8mm BHSCS & Econ T–Nut

Part No	A	B	C	D	E	F	kg	Compatibility Code
1150	20	20	5.3	5	1.2	2.5	0.0059	2020F–5(Al)
1151	20	20	5.3	5	1.2	2.5	0.015	2020F–5(Zn)

2028 A 2 HOLE INSIDE CORNER BRACKETS

DIE-CAST ALUMINIUM, NATURAL FINISH

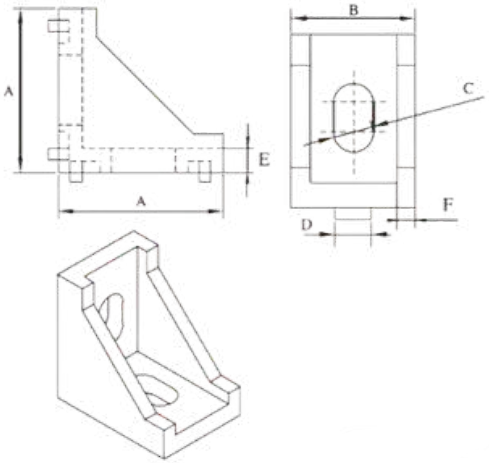

No. 4108

/Part No	QTY	Description
5384 & 5391	2	M5 × 10mm Dorp– In T–studs & Flange Nuts

/Part No	A	B	C	D	E	F	kg	Compatibility Code
1024	28	20	6.3	6	4	3	0.013	2028A–6

2028 B 2 HOLE INSIDE CORNER BRACKETS

DIE-CAST ALUMINIUM, NATURAL FINISH

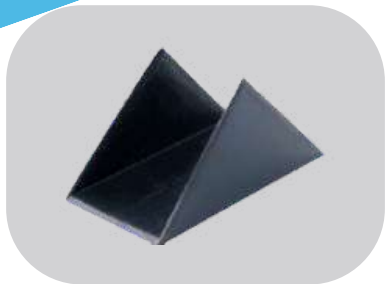

No. 4108

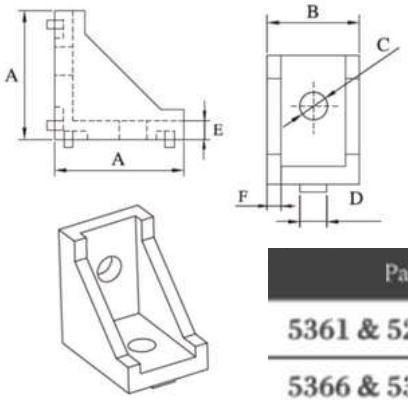

Part No	QTY	Description
5361 & 5271	2	M6 × 8mm BHSCS & Slide T–Nut
5366 & 5319	2	M4 × 8mm SHCS & Econ T–Nut

Part No	A	B	C	D	E	F	kg	Compatibility Code
1002	28	20	ϕ6	4	4	3	0.0135	2028B–4

2028 C 2 HOLE INSIDE CORNER BRACKETS

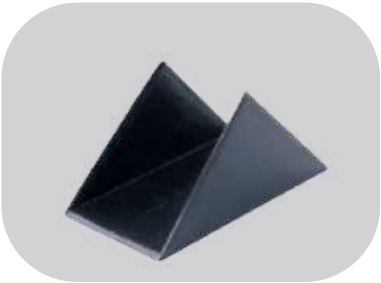

No. 4108

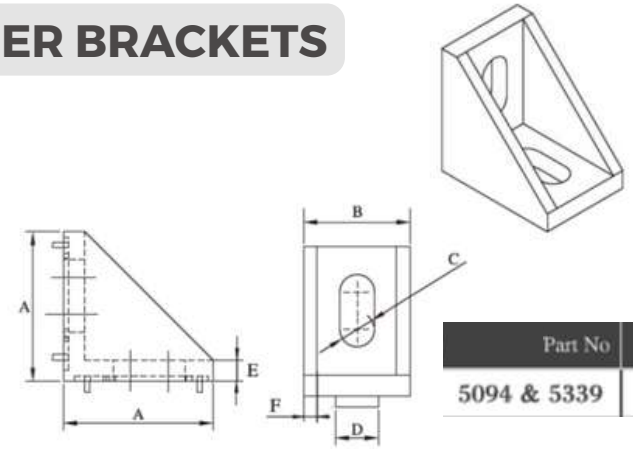

Part No	QTY	Description
5094 & 5339	2	M5 × 8mm BHSCS & Econ T–Nut

Part No	A	B	C	D	E	F	kg	Compatibility Code
1040	28	20	6.5	8	4	2.5	0.013	2028C–8

2040 A 4 HOLE INSIDE CORNER BRACKETS

DIE-CAST ALUMINIUM, NATURAL FINISH

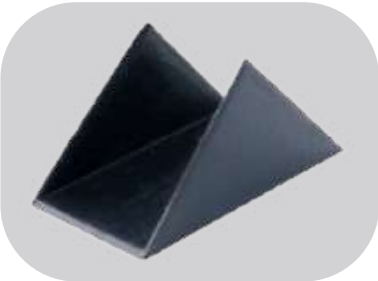

No. 4112

Part No	QTY	Description
5160 & 5338	4	M4 × 8mm BHSCS & Econ T–Nut
5161 & 5338	4	M4 × 10mm BHSCS & Econ T–Nut

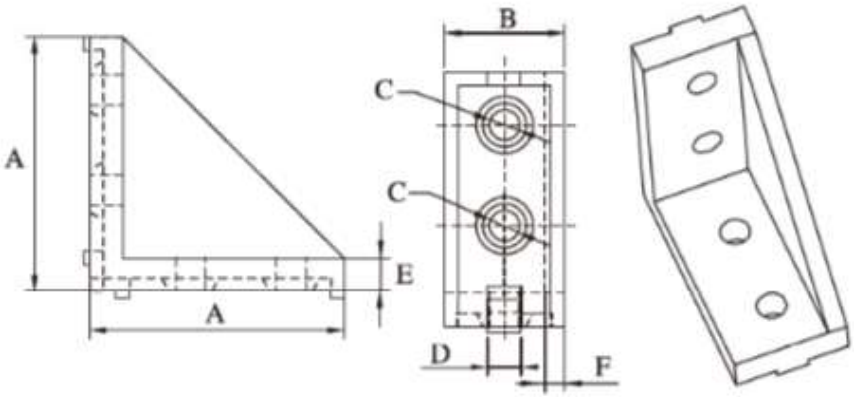

Part No	A	B	C	D	E	F	kg	Compatibility Code
1025	38	18	ϕ4.5	5	5	3	0.016	2040A–5

2040 K 4 HOLE INSIDE CORNER BRACKETS

DIE-CAST ALUMINIUM, NATURAL FINISH

No. 4141

Part No	QTY	Description
5156	4	M6 × 20mm FHSCS

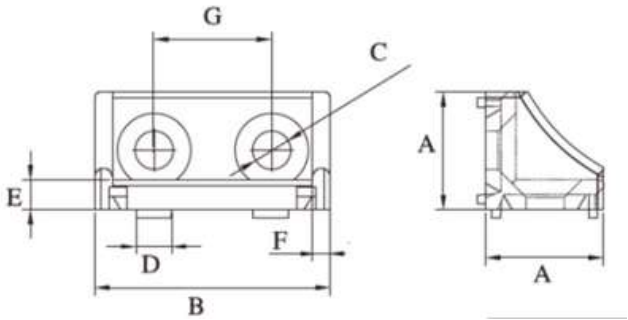

Part No	A	B	C	D	E	F	G	kg	Compatibility Code
1230	20	40	ϕ6.5	6	5	3	20	0.0126	2040K

2530 A 2 HOLE INSIDE CORNER BRACKETS

DIE-CAST ALUMINIUM, NATURAL FINISH

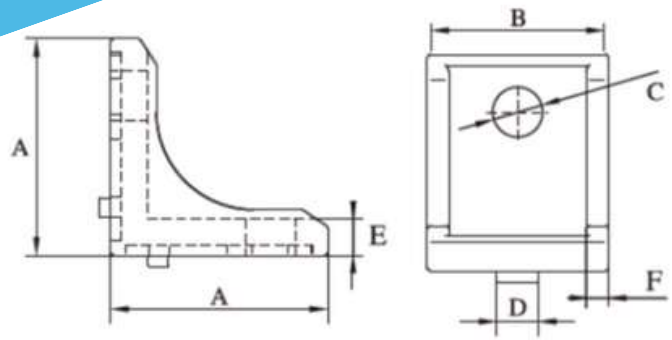

Part No	QTY	Description
5098 & 5341	2	M6 × 10mm BHSCS & Econ T–Nut
5099 & 5341	2	M6 × 12mm BHSCS & Econ T–Nut

Part No	A	B	C	D	E	F	kg	Compatibility Code
1049	30	25	ϕ7	5.7	5	3	0.016	2530A–6

2540 A 2 HOLE INSIDE CORNER BRACKETS

DIE-CAST ALUMINIUM, NATURAL FINISH

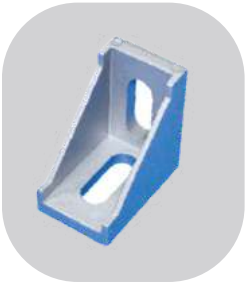

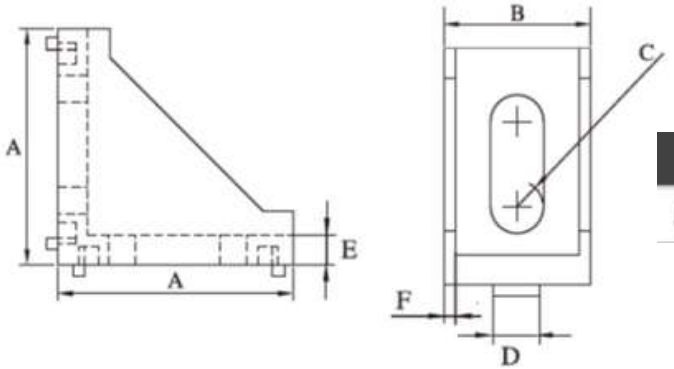

Part No	QTY	Description
5098 & 5341	2	M6 × 10mm BHSCS & Econ T–Nut

Part No	A	B	C	D	E	F	kg	Compatibility Code
1051	40	25	9	8	5	2	0.027	2540A–8

2550 K 4 HOLE INSIDE CORNER BRACKETS

DIE-CAST ALUMINIUM, NATURAL FINISH

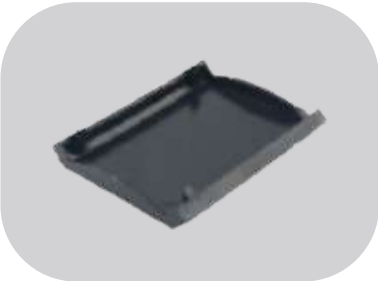

No. 4112

Part No	QTY	Description
5156	4	M6 × 20mm FHSCS

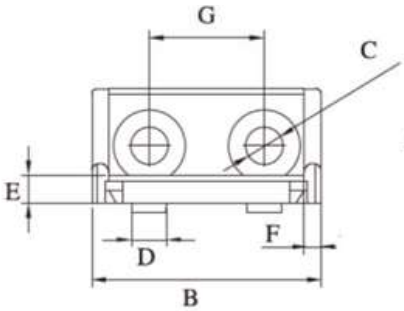

Part No	A	B	C	D	E	F	G	kg	Compatibility Code
1231	25	50	ϕ6.6	6	5	3	25	0.0210	2550K

3030 A 2 HOLE INSIDE CORNER BRACKETS

DIE-CAST ALUMINIUM, NATURAL FINISH

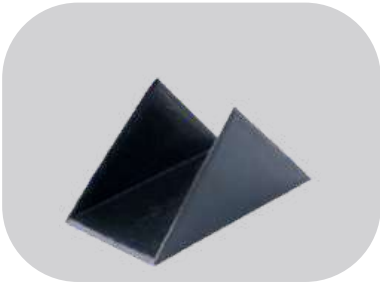

No. 4056

'art No	QTY	Description
5299 & 5076	2	M6×12mm Drop–In T–Studs & Flange Nuts
5298 & 5076	2	M6×12mm Drop–In T–Studs & Flange Nuts
5298 & 5076	2	M6×12mm Drop–In T–Studs & Flange Nuts

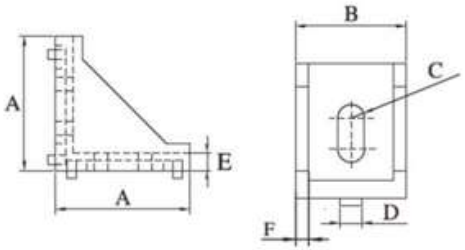

Part No	A	B	C	D	E	F	kg	Compatibility Code
1003	35	28	7.5	6	4	3	0.026	3030A–6
1213	35	28	9.4	6	3.5	2.5	0.020	3030I–6
1026	35	28	7	8	4	3	0.026	3030A–8

3030 B 4 HOLE INSIDE CORNER BRACKETS

DIE-CAST ALUMINIUM, NATURAL FINISH

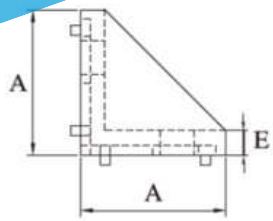

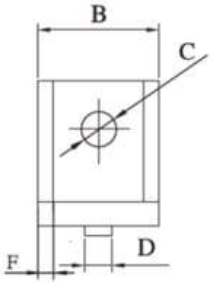

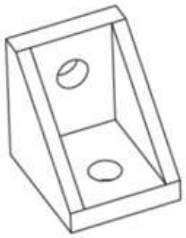

Part No	QTY	Description
5099&5341	2	M6×12 mmSHCS & Econ-In T-Nuts

Part No	A	B	C	D	E	F	kg	Compatibility Code
1004	30	25	ϕ6.5	6	5	3	0.018	3030B-6

3030 E 2 HOLE INSIDE CORNER BRACKETS

DIE-CAST ALUMINIUM, NATURAL FINISH

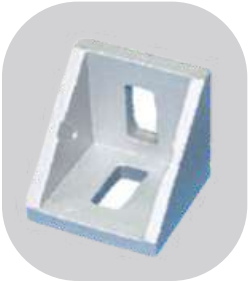

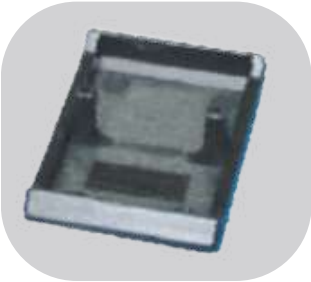

No. 4050

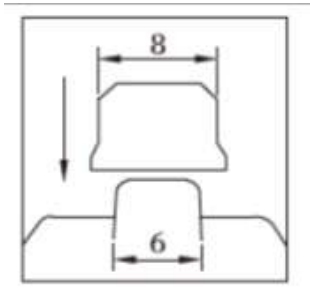

No. 4199

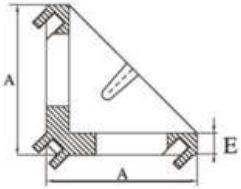

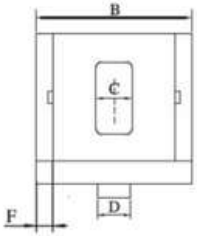

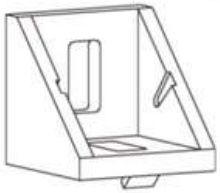

Part No	QTY	Description
5373 & 5277 & 5041	4	M6 × 14 mmSHCS & Slide-In T-Nuts & Flat Waher
5373 & 5067 & 5041	4	M6 × 14 mmSHCS & Slide-In T-Nuts & Flat Waher

Part No	A	B	C	D	E	F	kg	Compatibility Code
1034	27	28	6.4	6	4	3	0.020	3030E-6
1037	27	28	6.4	8	4	3	0.022	3030E-8

3030 F 2 HOLE INSIDE CORNER BRACKETS

DIE-CAST ALUMINIUM OR ZINC, SILVER POWER COATING

No. 4101

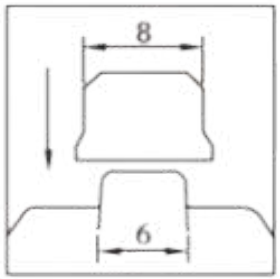

No. 4199

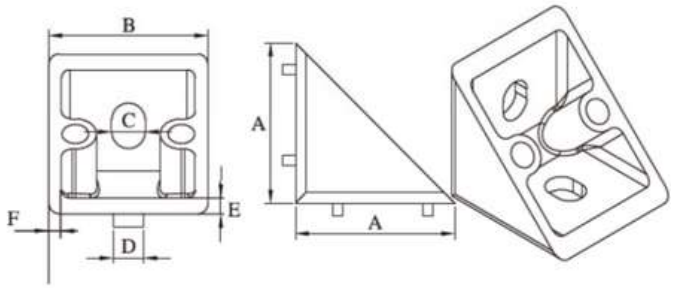

/Part No	QTY	Description
5099 & 5343	2	M6 × 12mm BHSCS & Econ T–Nut

Part No	A	B	C	D	E	F	kg	Compatibility Code
1152	30	30	ϕ6.3	6	3	2.4	0.018	3030F–6(Al)
1153							0.050	3030F–6(Zn)
1154				8			0.019	3030F–8(Al)
1155							0.050	3030F–8(Zn)

3040 A 2 HOLE INSIDE CORNER BRACKETS

DIE-CAST ALUMINIUM, NATURAL FINISH

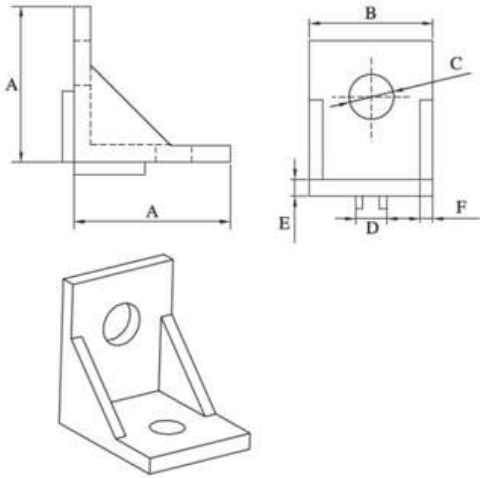

/Part No	QTY	Description
5373 & 5006 & 5041	4	M6 × 14 mmSHCS & Econ–In T–Nuts & Flat Waher

/Part No	A	B	C	D	E	F	kg	Compatibility Code
1008	38	30	ϕ8.5	8	4.5	3.5	0.0275	3040A–8

3043 A 2 HOLE INSIDE CORNER BRACKETS

DIE-CAST ALUMINIUM, NATURAL FINISH

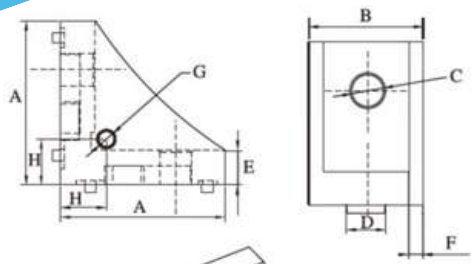

Part No	QTY	Description
5103 & 5055	2	M8 × 18mm BHSCS & Econ T–Nuts

Part No	A	B	C	D	E	F	G	H	kg	Compatibility Code
1032	43	30	ϕ8.3	10.3	9	3.75	M5	12	0.053	3043A–10

3060 A 4 HOLE INSIDE CORNER BRACKETS

DIE-CAST ALUMINIUM, NATURAL FINISH

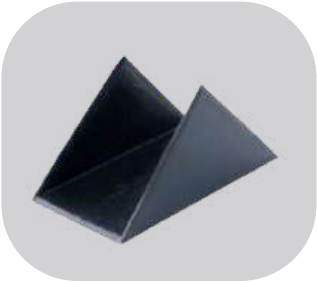

No. 4113

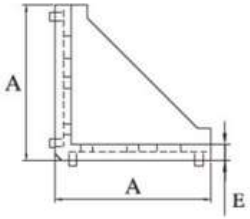

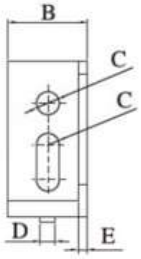

/Part No	QTY	Description
5373 & 5277 & 5041	4	M6 × 14 mmSHCS & Slide–In T–Nuts & Flat Waher

Part No	A	B	C	D	E	F	kg	Compatibility Code
1005	58	30	ϕ8.5	6	6	3.5	0.047	3060A–6
1027	58	30	ϕ8.5	8	6	3.5	0.046	3060A–8

3060 B 4 HOLE INSIDE CORNER BRACKETS

DIE-CAST ALUMINIUM, NATURAL FINISH

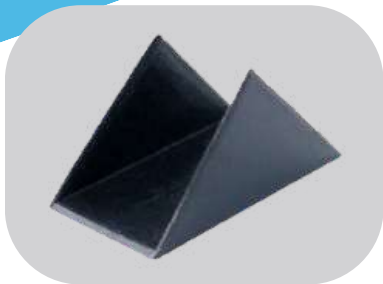

No. 4129

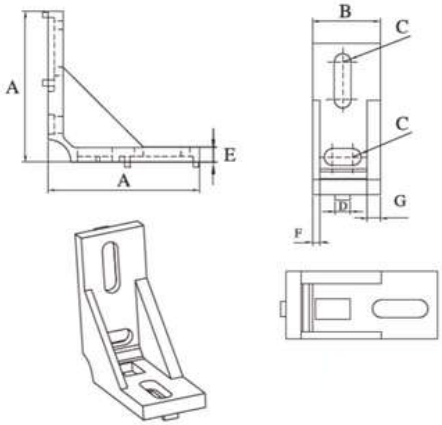

Part No	QTY	Description
5375 & 5277	4	M6 × 14 mmBHSCS & Econ–In T–Nuts

Part No	A	B	C	D	E	F	G	kg	Compatibility Code
1006	60	27	ϕ6.5	6	6	3	5	0.044	3060B–6

3060 C 4 HOLE INSIDE CORNER BRACKETS

DIE-CAST ALUMINIUM, NATURAL FINISH

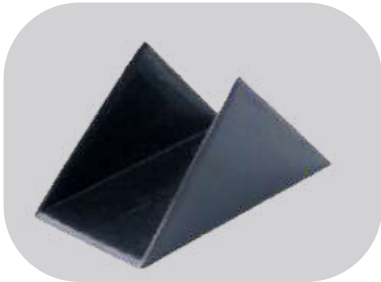

No. 4129

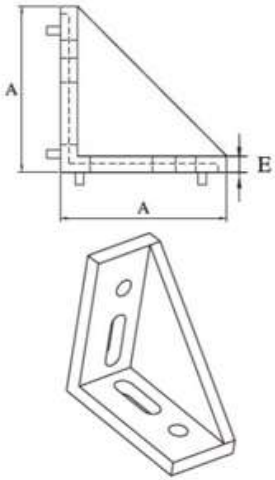

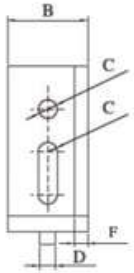

Part No	A	B	C	D	E	F	kg	Compatibility Code
1007	58	28	ϕ6.5	6	6	5	0.061	3060C–6
1028	58	28	ϕ6.5	8	6	5	0.061	3060C–8A

Part No	QTY	Description
5022 & 5076	4	M6 × 16mm Drop–In T–Studs & Flange Nuts
5373 & 5277 & 5041	4	M6 × 14 mmSHCS & Slide–In T–Nuts & Flat Waher

3060 C 4 HOLE INSIDE CORNER BRACKETS

DIE-CAST ALUMINIUM, NATURAL FINISH

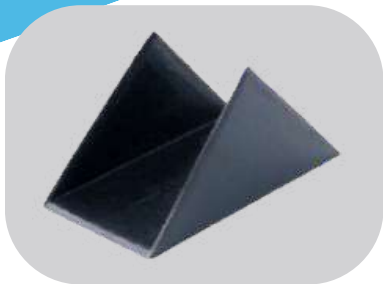

No. 4129

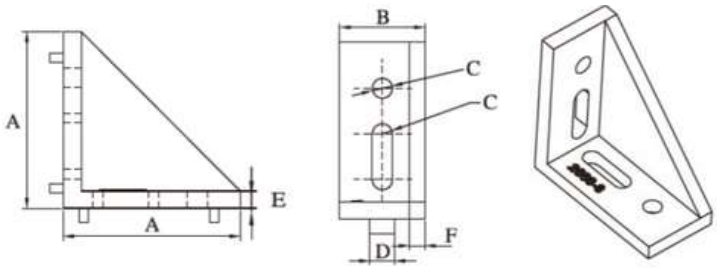

Part No	QTY	Description
5147 & 5067 & 5041	2	M6 × 12 mmSHCS & Slide–In T–Nuts & Flat Waher

/Part No	A	B	C	D	E	F	kg	Compatibility Code
1029	58	28	ϕ6.5	6	6	5	0.061	3060C–8B

3060 E 4 HOLE INSIDE CORNER BRACKETS

DIE-CAST ALUMINIUM, NATURAL FINISH

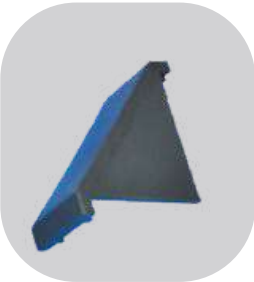

No. 4067

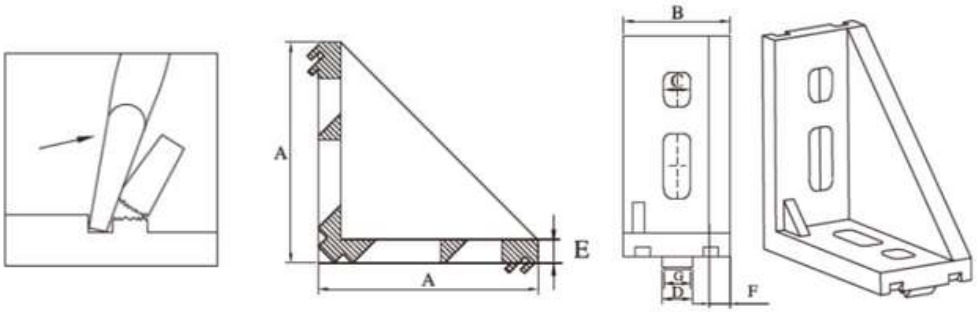

Part No	QTY	Description
5373 & 5006 & 5041	4	M6 × 14 mmSHCS & Econ–In T–Nuts & Flat Waher
5237&5076	4	M6 × 16 mmDrop–In T–studs & Flange Nuts

Part No	A	B	C	D	E	F	G	kg	Compatibility Code
1055	57.6	28	7	8	6	5.5	6	0.064	3060E–6/8

3060 F 4 HOLE INSIDE CORNER BRACKETS

DIE-CAST ALUMINIUM OR ZINC, SILVER POWER COATING

No. 4102

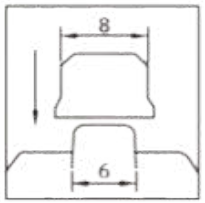

No. 4199

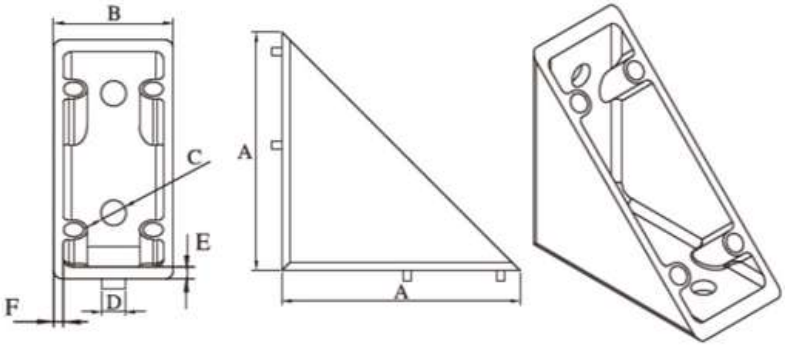

Part No	QTY	Description
5375 & 5277	4	M6 × 14 mmBHSCS & Slide–In T–Nuts
5099& 5067	4	M6 × 12 mmBHSCS & Slide–In T–Nuts

Part No	A	B	C	D	E	F	kg	Compatibility Code
1156	60	30	ϕ6.3	6	3.2	2.5	0.049	3060F–6(Al)
1157							0.14	3060F–6(Zn)
1158				8			0.050	3060F–8(Al)
1159							0.14	3060F–8(Zn)

3060 K 4 HOLE INSIDE CORNER BRACKETS

DIE-CAST ALUMINIUM, NATURAL FINISH

No. 4143

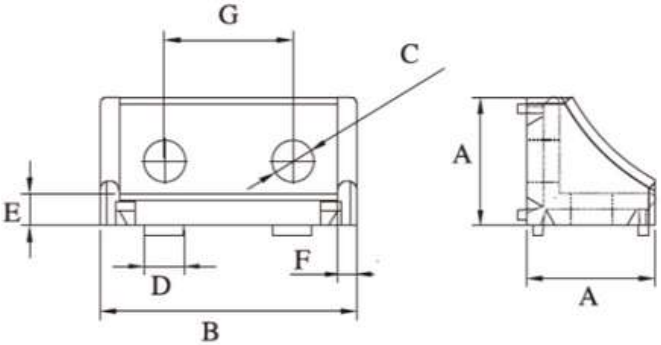

/Part No	QTY	Description
5149	4	M8 × 20mm SHCS

Part No	A	B	C	D	E	F	G	kg	Compatibility Code
1232	30	60	ϕ8.5	8	6	3	30	0.0362	3060K

4040 A 2 HOLE INSIDE CORNER BRACKETS

DIE-CAST ALUMINIUM, NATURAL FINISH

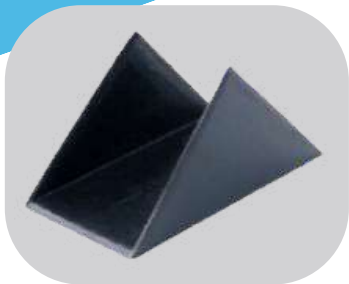

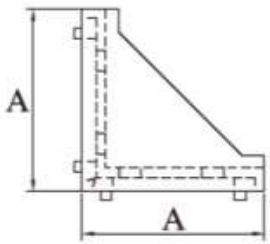

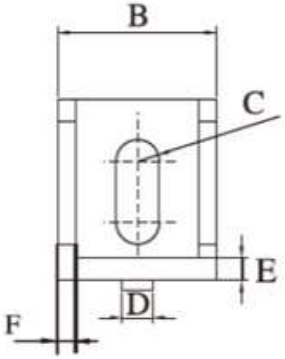

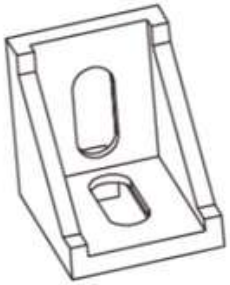

No. 4057

Part No	QTY	Description
5026 & 5077	2	M8 × 20mm Drop–In T–Studs & Flange Nuts

Part No	A	B	C	D	E	F	kg	Compatibility Code
1009	40	35	9.4	8	5	4	0.033	40A–8
1214	40	35	9.4	8	4.5	3	0.029	40I–8
1215	40	35	9.4	无定位块 No bump on back	4.5	3	0.032	40J

4040 B 2 HOLE INSIDE CORNER BRACKETS

DIE-CAST ALUMINIUM, NATURAL FINISH

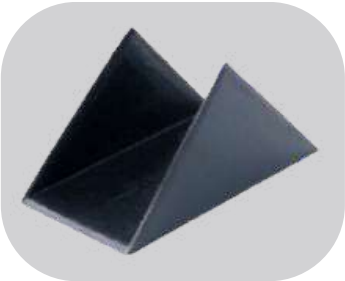

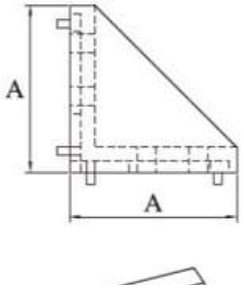

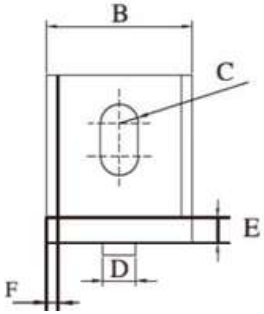

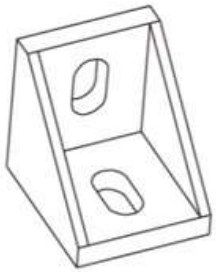

No. 4057

Part No	QTY	Description
5110 & 5344 & 5266	2	M8 × 16 mmSHCS & Econ–In T–Nuts & Flat Waher

Part No	A	B	C	D	E	F	kg	Compatibility Code
1010	40	35	8.5	8	5	3	0.036	4040B–8

4040 C 2 HOLE INSIDE CORNER BRACKETS

DIE-CAST ALUMINIUM, NATURAL FINISH

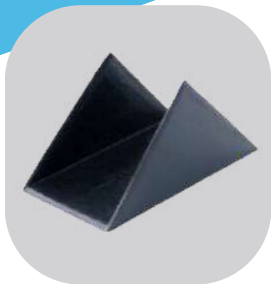

No. 4128

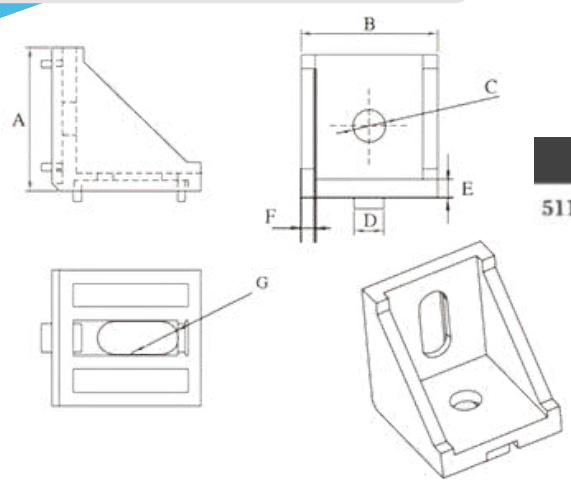

Part No	QTY	Description
5110 & 5344 & 5266	2	M8 × 16 mmSHCS & Econ–In T–Nuts & Flat Waher

Part No	A	B	C	D	E	F	G	kg	Compatibility Code
1011	40	38	ϕ8.5	8	5	4	R 4.25	0.045	4040C–8

4040 E 2 HOLE INSIDE CORNER BRACKETS

DIE-CAST ALUMINIUM, NATURAL FINISH

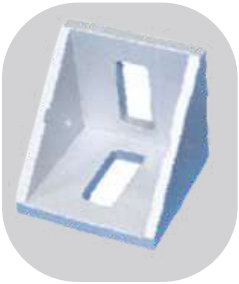

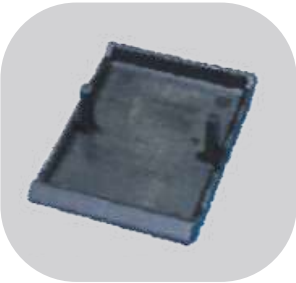

No. 4052

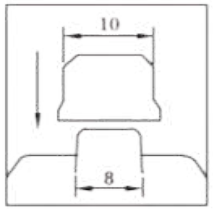

No. 4200

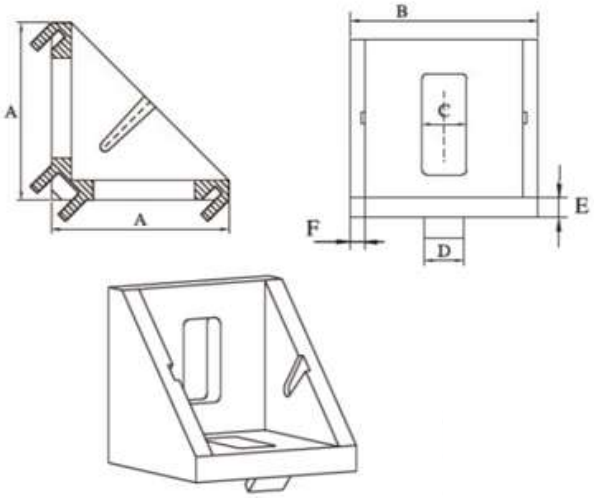

/Part No	QTY	Description
5025 & 5077	2	M8 × 16mm Drop–In T–studs & Flange Nuts
5278 & 5077	2	M8 × 16mm Drop–In T–studs & Flange Nuts

Part No	A	B	C	D	E	F	kg	Compatibility Code
1035	36	38	9	8	4	3	0.035	4040E–8
1038	36	38	9	10	4	3	0.037	4040E–10

4040 F 2 HOLE INSIDE CORNER BRACKETS

DIE-CAST ALUMINIUM OR ZINC, SILVER POWER COATING

No. 4103

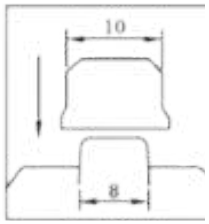

No. 4200

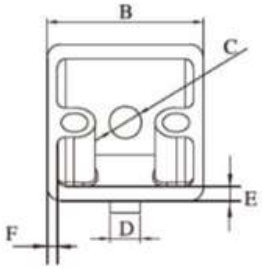

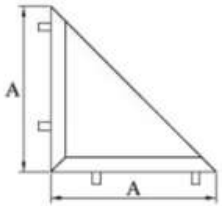

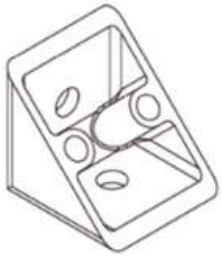

Part No	A	B	C	D	E	F	kg	Compatibility Code
1160	40	40	ϕ8.3	8	3.5	3.5	0.041	4040F-8(Al)
1161							0.12	4040F-8(Zn)
1162				10			0.042	4040F-10(Al)
1163							0.12	4040F-10(Zn)

Part No	QTY	Description
5372 & 5344	2	M8 × 14 mmSHCS & Econ-In T-Nuts
5102 & 5344	2	M8 × 16 mmSHCS & Econ-In T-Nuts

4080 A 2 HOLE INSIDE CORNER BRACKETS

DIE-CAST ALUMINIUM, NATURAL FINISH

No. 4114

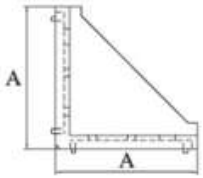

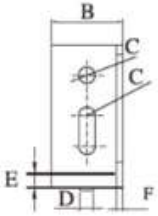

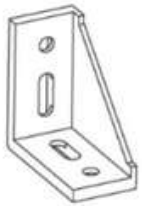

Part No	QTY	Description
5149 & 5344 & 5266	4	M8 × 20 mmSHCS & Econ-In T-Nuts & Flat Waher

Part No	A	B	C	D	E	F	kg	Compatibility Code
1012	78	40	ϕ8.5	8	7.5	3.5	0.095	4080A-8

4080 B 4 HOLE INSIDE CORNER BRACKETS

DIE-CAST ALUMINIUM, NATURAL FINISH

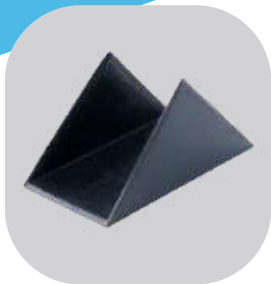

No. 4130

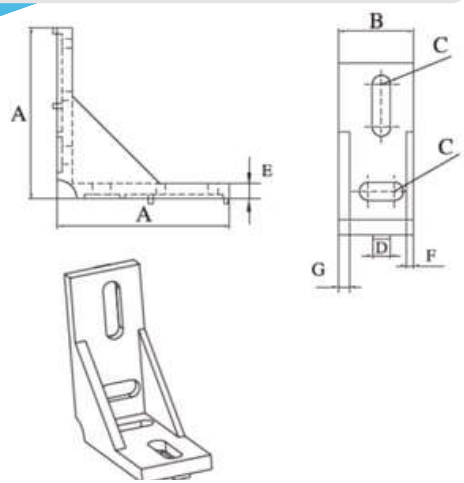

/Part No	QTY	Description
5110& 5344 & 5266	4	M8 × 16 mmSHCS & Econ–In T–Nuts & Flat Waher

Part No	A	B	C	D	E	F	G	kg	Compatibility Code
1013	80	35	9	8	7	3.5	5	0.087	4080B–8

4080 C 4 HOLE INSIDE CORNER BRACKETS

DIE-CAST ALUMINIUM, NATURAL FINISH

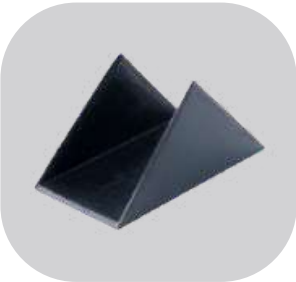

No. 4130

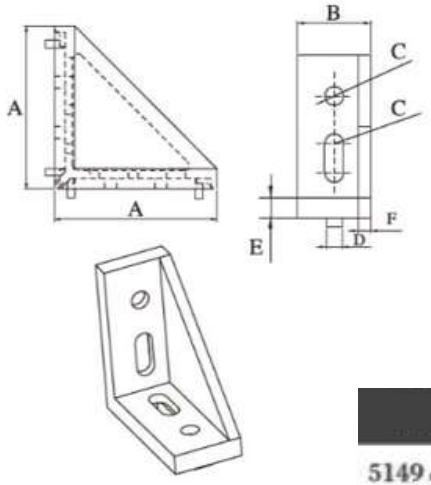

Part No	QTY	Description
5149 & 5344 & 5266	4	M8 × 20 mmSHCS & Econ–In T–Nuts & Flat Waher

/Part No	A	B	C	D	E	F	kg	Compatibility Code
1014	80	36	ϕ9	8	10	6	0.142	4080C–8

4080 D 4 HOLE INSIDE CORNER BRACKETS

DIE-CAST ALUMINIUM, NATURAL FINISH

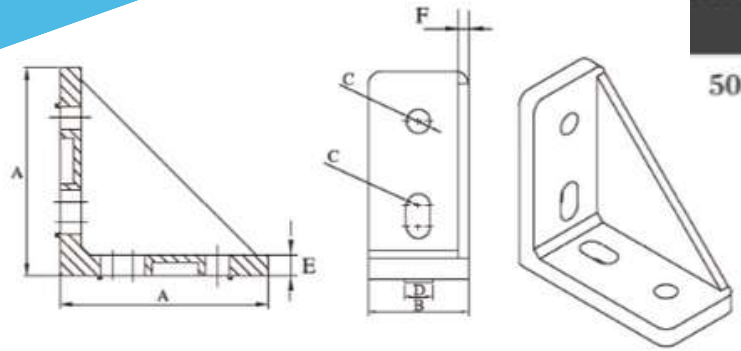

/Part No	QTY	Description
5030 & 5018	4	M8 × 20mm Drop–In T–studs & Flange Nuts

/Part No	A	B	C	D	E	F	kg	Compatibility Code
1052	79	38	ϕ9	10	8	4	0.120	4080D–10

4080 E 4 HOLE INSIDE CORNER BRACKETS

DIE-CAST ALUMINIUM, NATURAL FINISH

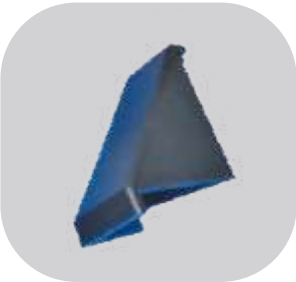

No. 4069

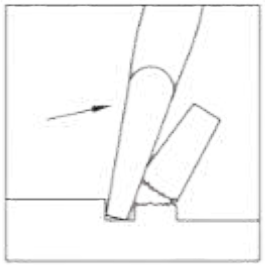

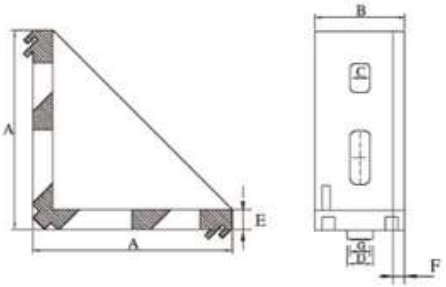

/Part No	QTY	Description
5149 & 5344 & 5266	4	M8 × 20 mmSHCS & Econ–In T–Nuts & Flat Waher

/Part No	A	B	C	D	E	F	G	kg	Compatibility Code
1059	79.5	36	8	10	8	5	8	0.140	4080E–8/10

4080 E 4 HOLE INSIDE CORNER BRACKETS

DIE-CAST ALUMINIUM OR ZINC, SILVER POWER COATING

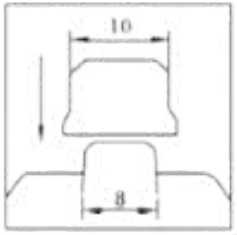

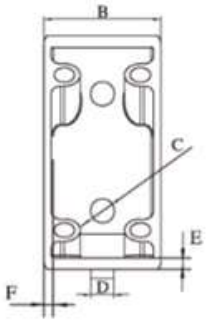

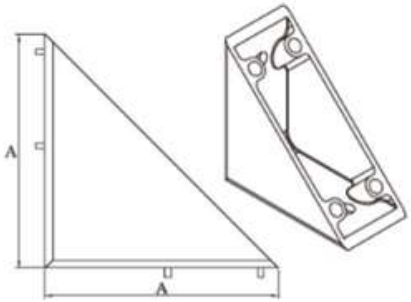

No. 4104 **No. 4200**

Part No	QTY	Description
5372 & 5344	4	M8 × 14 mmBHSCS & Econ–In T–Nuts
5102 & 5343	4	M8 × 16 mmBHSCS & Econ–In T–Nuts

货号/Part No	A	B	C	D	E	F	kg	Compatibility Code
1164	80	40	ϕ8.3	8	4.2	2.5	0.11	4080F–8(Al)
1165							0.31	4080F–8(Zn)
1166				10			0.111	4080F–10(Al)
1167							0.31	4080F–10(Zn)

4080 K 4 HOLE INSIDE CORNER BRACKETS

DIE-CAST ALUMINIUM, NATURAL FINISH

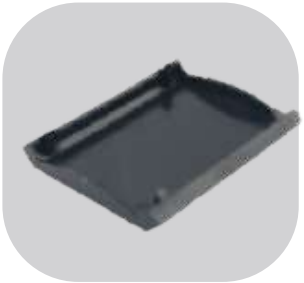

No. 4144

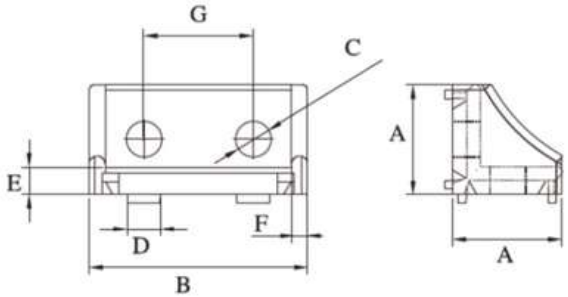

Part No	QTY	Description
5149	4	M8 × 20mm SHCS

Part No	A	B	C	D	E	F	G	kg	Compatibility Code
1233	40	80	ϕ8.5	8	6	3	40	0.0736	4080K

4545 A 2 HOLE INSIDE CORNER BRACKETS

DIE-CAST ALUMINIUM, NATURAL FINISH

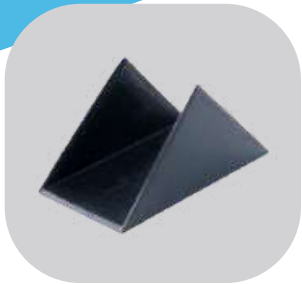

No. 4109

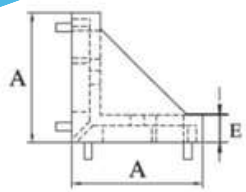

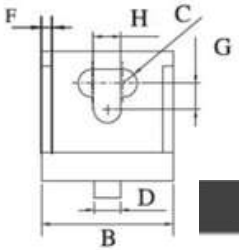

Part No	QTY	Description
5030 & 5077	2	M8 × 20 mmDrop–In T–Nuts & Flange Nuts
5370 & 5336 & 5266	2	M8 × 14 mmSHCS & Slide–In T–Nuts & Flat Waher

Part No	A	B	C	D	E	F	G	H	kg	Compatibility Code
1030	42	42	ϕ9	10	8.4	4	9	10.5	0.051	4545A–10
1015	42	42	ϕ9	8	8	4	9	11	0.051	4545B–8
1236	42	42	ϕ9.2	9	8	3.8	8.8	9.2	0.050	4545C–10

4545 E 2 HOLE INSIDE CORNER BRACKETS

DIE-CAST ALUMINIUM, NATURAL FINISH

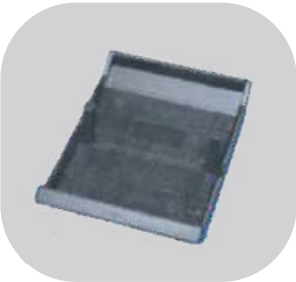

No. 4054

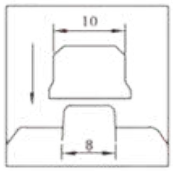

No. 4200

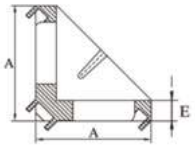

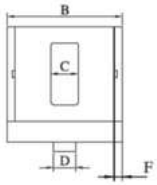

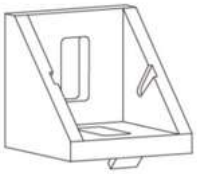

/Part No	QTY	Description
5030 & 5077	2	M8 × 20 mmDrop–In T–Nuts & Flange Nuts
5370 & 5336 & 5266	2	M8 × 14 mmSHCS & Slide–In T–Nuts & Flat Waher

Part No	A	B	C	D	E	F	kg	Compatibility Code
1039	42	42	10	8	4	3	0.05	4545E–8
1036	42	42	10	10	4	3	0.052	4545E–10

4545 F 2 HOLE INSIDE CORNER BRACKETS

DIE-CAST ALUMINIUM OR ZINC, SILVER POWER COATING

No. 4105

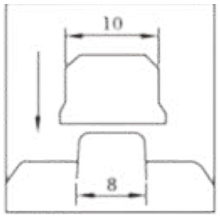

No. 4200

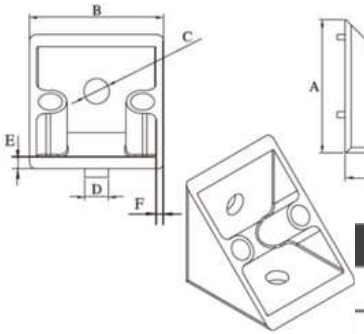

/Part No	QTY	Description
5223 & 5343	2	M8×12mm BHSCS & Econ T–Nut
5372 & 5336	2	M8×14mm BHSCS & Drop–In T–Nuts

Part No	A	B	C	D	E	F	kg	Compatibility Code
1168	45	45	ϕ8.3	8	2	2.5	0.055	4545F–8(Al)
1169							0.15	4545F–8(Zn)
1170				10			0.056	4545F–10(Al)
1171							0.15	4545F–10(Zn)

4590 A 2 HOLE INSIDE CORNER BRACKETS

DIE-CAST ALUMINIUM, NATURAL FINISH

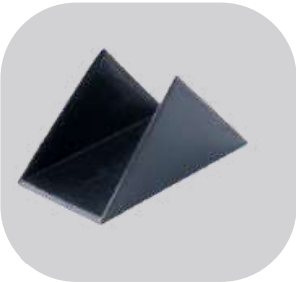

No. 4115

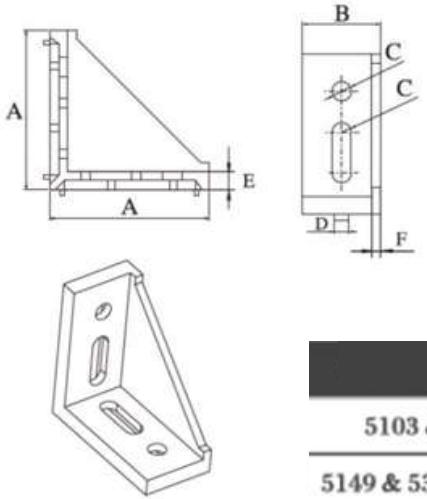

Part No	QTY	Description
5103 & 5336	4	M8×18 mmBHSCS & Slide–In T–Nuts
5149 & 5336 & 5266	4	M8×20 mmSHCS & Slide–In T–Nuts & Flat Waher

/Part No	A	B	C	D	E	F	kg	Compatibility Code
1016	88	42	ϕ9	8	10	5	0.156	4590A–8

4590 E 4 HOLE INSIDE CORNER BRACKETS

DIE-CAST ALUMINIUM, NATURAL FINISH

No. 4071

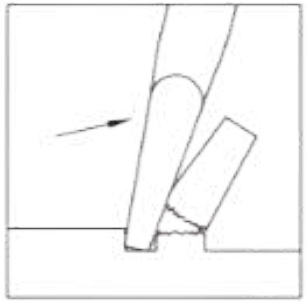

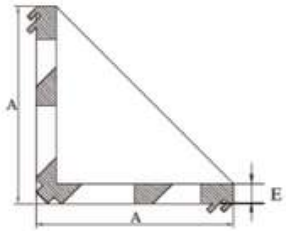

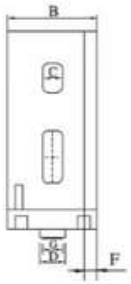

/Part No	QTY	Description
5103 & 5336 & 5266	4	M8 × 20 mmSHCS & Slide–In T–Nuts & Flat Waher

Part No	A	B	C	D	E	F	G	kg	Compatibility Code
1063	88	42	10	10	9	5	8	0.180	4590E–8/10

4590 F 2 HOLE INSIDE CORNER BRACKETS

DIE-CAST ALUMINIUM, NATURAL FINISH

No. 4106

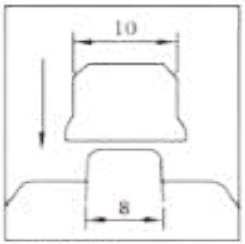

No. 4200

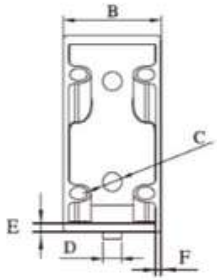

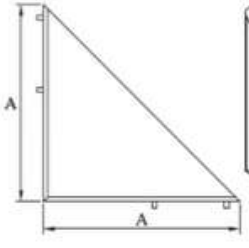

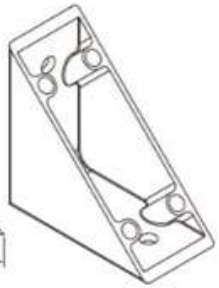

Part No	A	B	C	D	E	F	kg	Compatibility Code
1172	88	45	ϕ8.3	8	4	2.5	0.137	4590F–8(Al)
1173							0.38	4590F–8(Zn)
1174				10			0.138	4590F–10(Al)
1175							0.38	4590F–10(Zn)

Part No	QTY	Description
5102 & 5336	4	M8 × 16 mmBHSCS & Slide–In T–Nuts
5110& 5336 & 5266	4	M8 × 16 mmSHCS & Slide–In T–Nuts & Flat Waher

4590 K 4 HOLE INSIDE CORNER BRACKETS

DIE-CAST ALUMINIUM, NATURAL FINISH

No. 4145

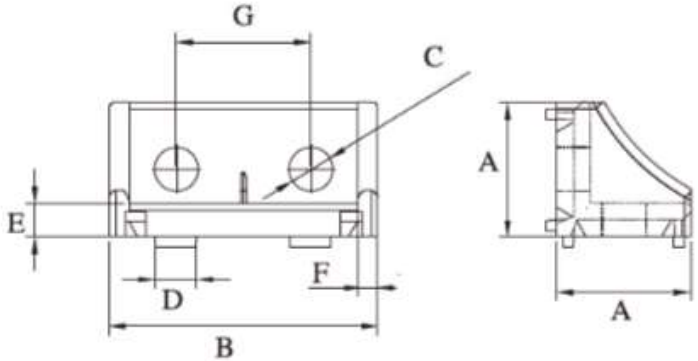

Part No	QTY	Description
5113	4	M12 × 30mm SHCS

Part No	A	B	C	D	E	F	G	kg	Compatibility Code
1234	45	90	ϕ12.5	10	6.5	3	45	0.105	4590K

45100 K 4 HOLE INSIDE CORNER BRACKETS

DIE-CAST ALUMINIUM, NATURAL FINISH

No. 4146

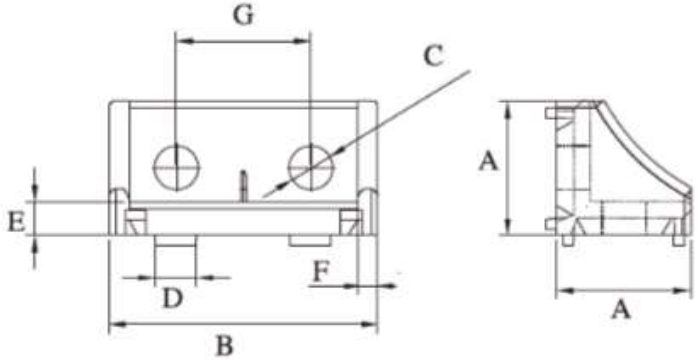

Part No	QTY	Description
5113	4	M12 × 30mm SHCS

Part No	A	B	C	D	E	F	G	kg	Compatibility Code
1235	50	100	ϕ12.5	8	6.5	3	50	0.125	50100K

6060 A 8 HOLE INSIDE CORNER BRACKETS

DIE-CAST ALUMINIUM, NATURAL FINISH

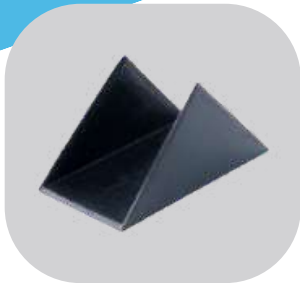

No. 4110

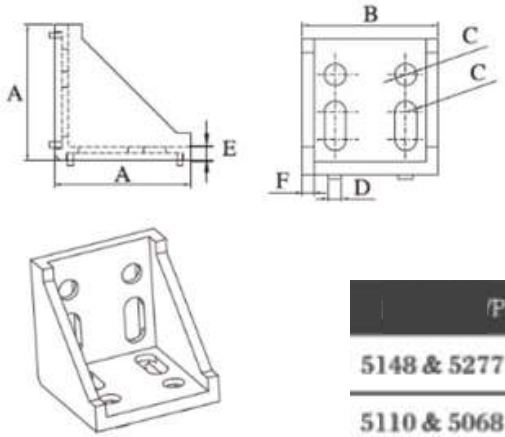

Part No	QTY	Description
5148 & 5277 & 5041	8	M6 × 16 mmSHCS & Slide–In T–Nuts & Flat Waher
5110 & 5068 & 5266	8	M8 × 16 mmSHCS & Slide–In T–Nuts & Flat Waher

Part No	A	B	C	D	E	F	kg	Compatibility Code
1031	53	58	ϕ6.5	6	5.2	3.3	0.090	6060D–6
1017	58	58	ϕ8.5	8	5.2	3.3	0.080	6060A–8

6060 B 8 HOLE INSIDE CORNER BRACKETS

DIE-CAST ALUMINIUM, NATURAL FINISH

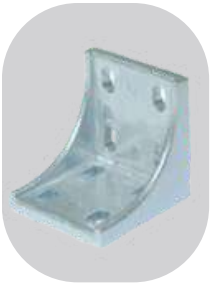

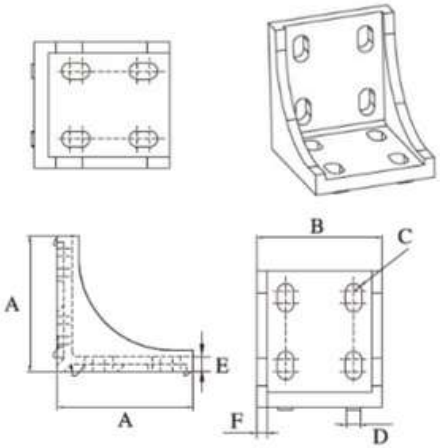

Part No	QTY	Description
5148 & 5277 & 5041	8	M6 × 16 mmSHCS & Slide–In T–Nuts & Flat Waher

Part No	A	B	C	D	E	F	kg	Compatibility Code
1019	60	55	ϕ6.5	6	6	4	0.088	6060B–6

6060 C 8 HOLE INSIDE CORNER BRACKETS

DIE-CAST ALUMINIUM, NATURAL FINISH

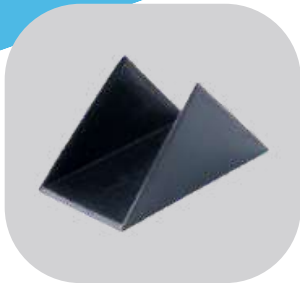

No. 4110

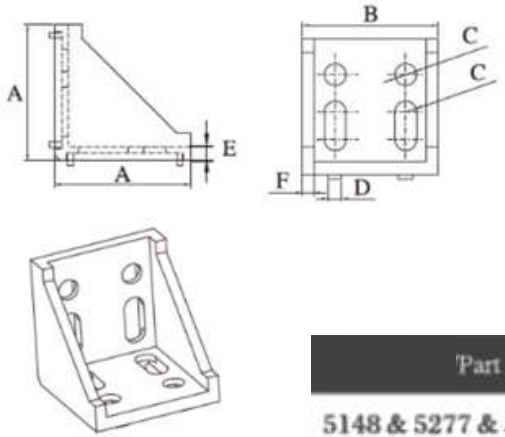

Part No	QTY	Description
5148 & 5277 & 5041	8	M6 × 16 mmSHCS & Slide–In T–Nuts & Flat Waher

/Part No	A	B	C	D	E	F	kg	Compatibility Code
1018	58	58	ϕ8.5	6	6	5	0.096	6060C–6

6060 E 8 HOLE INSIDE CORNER BRACKETS

DIE-CAST ALUMINIUM, NATURAL FINISH

No. 4058

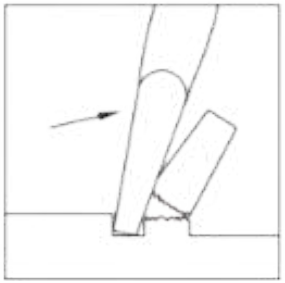

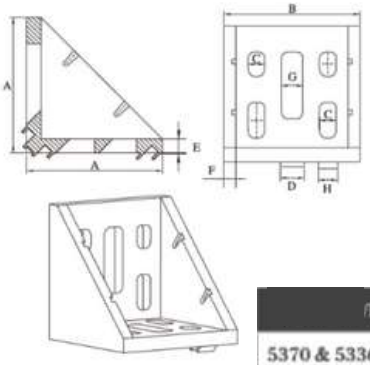

/Part No	QTY	Description
5370 & 5336 & 5266	8	M8 × 14 mmSHCS & Slide–In T–Nuts & Flat Waher

/Part No	A	B	C	D	E	F	G	H	kg	Compatibility Code
1067	57	57	7	8/10	6	5	9	6/8	0.130	6060E–6/8

8080 A 8 HOLE INSIDE CORNER BRACKETS

DIE-CAST ALUMINIUM, NATURAL FINISH

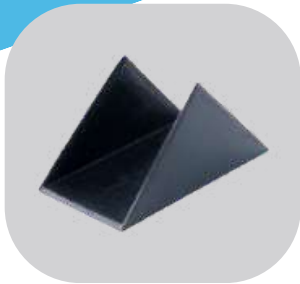

No. 4111

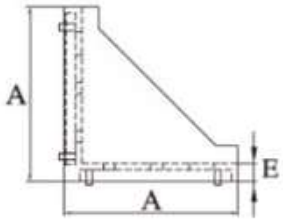

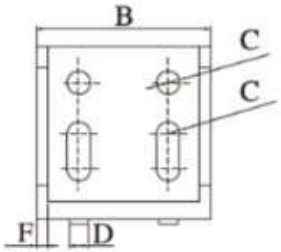

Part No	QTY	Description
5149 & 5344 & 5266	8	M8 × 20 mmSHCS & Econ–In T–Nuts & Flat Waher

/Part No	A	B	C	D	E	F	kg	Compatibility Code
1020	78	78	ϕ9	8	7.6	3.3	0.184	8080A–8

8080 B 8 HOLE INSIDE CORNER BRACKETS

DIE-CAST ALUMINIUM, NATURAL FINISH

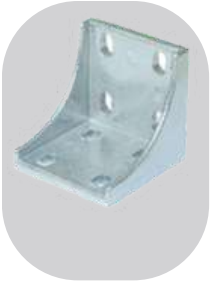

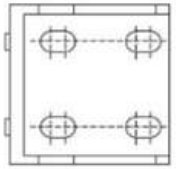

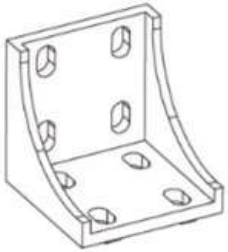

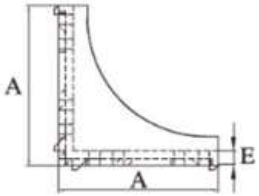

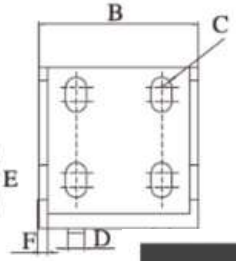

/Part No	QTY	Description
5149 & 5344 & 5266	8	M8 × 20 mmSHCS & Econ–In T–Nuts & Flat Waher

/Part No	A	B	C	D	E	F	kg	Compatibility Code
1022	75	75	ϕ9	8	6.7	5	0.152	8080B–8

8080 C 8 HOLE INSIDE CORNER BRACKETS

DIE-CAST ALUMINIUM, NATURAL FINISH

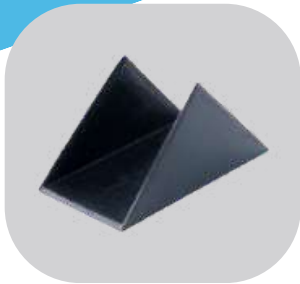

No. 4111

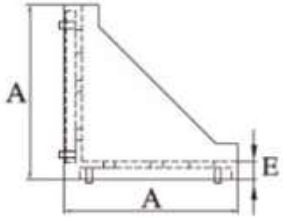

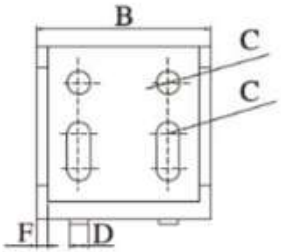

/Part No	QTY	Description
5149 & 5344 & 5266	8	M8×20 mmSHCS & Econ–In T–Nuts & Flat Waher

/Part No	A	B	C	D	E	F	kg	Compatibility Code
1021	78	78	ϕ9	8	7.5	5	0.20	8080C–8

8080 E 8 HOLE INSIDE CORNER BRACKETS

DIE-CAST ALUMINIUM, NATURAL FINISH

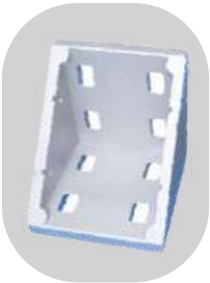

No. 4058

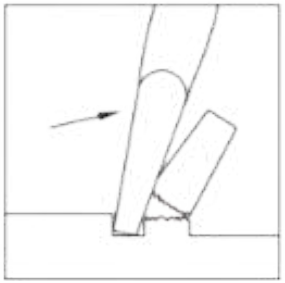

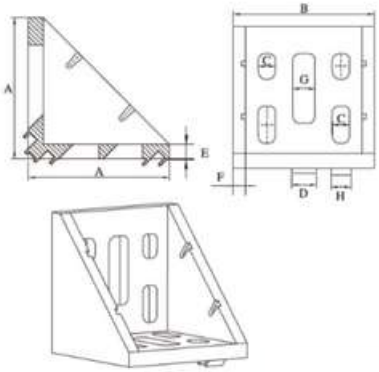

Part No	QTY	Description
5149 & 5344 & 5266	8	M8×20 mmSHCS & Econ–In T–Nuts & Flat Waher

/Part No	A	B	C	D	E	F	G	kg	Compatibility Code
1071	76	74	9	10	7.5	6	8	0.254	8080E–8/10

9090 E 8 HOLE INSIDE CORNER BRACKETS

DIE-CAST ALUMINIUM, NATURAL FINISH

No. 4062

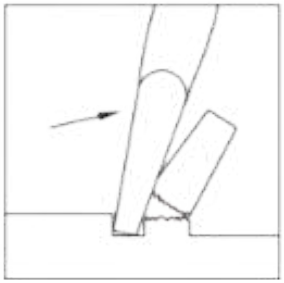

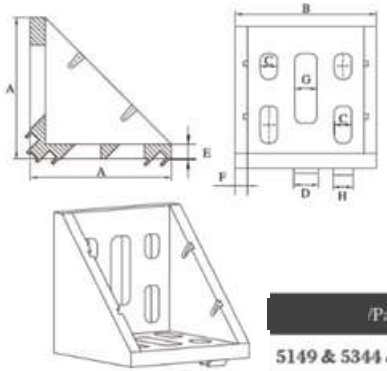

/Part No	QTY	Description
5149 & 5344 & 5266	8	M8×20 mmSHCS & Econ–In T–Nuts & Flat Waher

Part No	A	B	C	D	E	F	G	kg	Compatibility Code
1075	86	88	9	10	9	6	8	0.370	9090E–8/10

100100 E 8 HOLE INSIDE CORNER BRACKETS

DIE-CAST ALUMINIUM, NATURAL FINISH

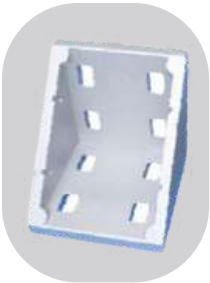

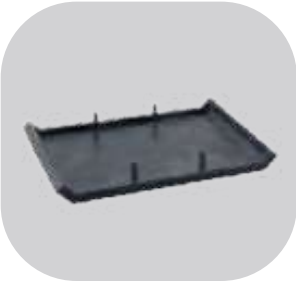

No. 4064

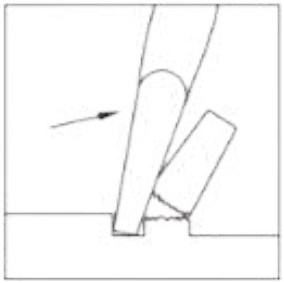

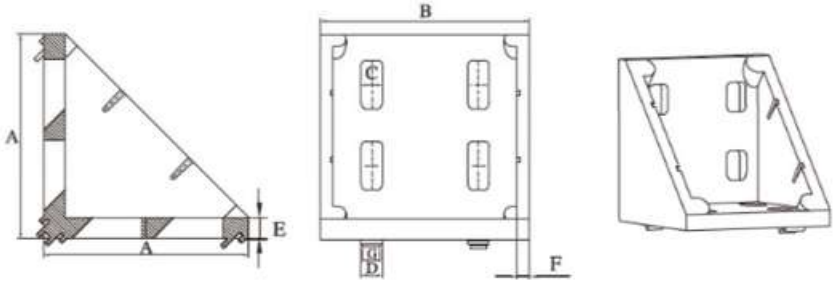

/Part No	QTY	Description
5149 & 5344 & 5266	8	M8×20 mmSHCS & Econ–In T–Nuts & Flat Waher

Part No	A	B	C	D	E	F	G	kg	Compatibility Code
1079	96	98	10	10	10	6	8	0.500	100100 E–8/10

INSTALLATION OF CNC MACHINING CORNER PARTS

Step 1: confirm that parts are mainly composed of corner parts, bar nuts and semicircle head bolts.

Step 2: connect the semicircle head bolt through the hole at the connection angle with the bar nut to preassamble it.

Step 3: slide the connecting corner member into the T slot of a profile (do not tighten it completely).

Step 4: slide the other profile on to the connecting corner so that the end face of one profile and the slot face of the other profile form a straight line.

Step 5: use hexagon wrench to tighten all semicircle head bolts until completely secure.

2 HOLE INSIDE CORNER BRACKETS

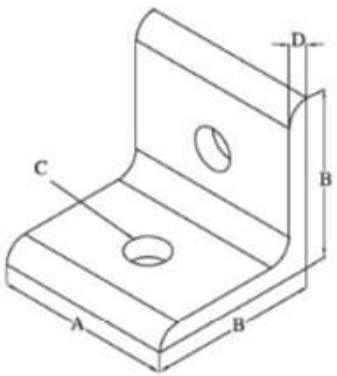

Part No	QTY	Description
5094 & 5339	2	M5 × 8mm BHSCS & Econ T–Nut
5098 & 5341	2	M6 × 10mm BHSCS & Econ T–Nut
5099 & 5343	2	M6 × 12mm BHSCS & Econ T–Nut
5102 & 5344	2	M8 × 16mm BHSCS & Econ T–Nut

Part No	A	B	C	D	kg	Compatibility Code
6001	18	25	ϕ5.3	3	0.0076	20
6171	22	25	ϕ6.3	3	0.009	25
6002	26	30	ϕ6.3	4	0.016	30
6003	36	40	ϕ8.3	6	0.048	40
6155	46	60	ϕ8.3	4	0.048	50
6157	56	60	ϕ8.3	4	0.071	60

2 HOLE LITE TRANSITION CORNER BRACKET

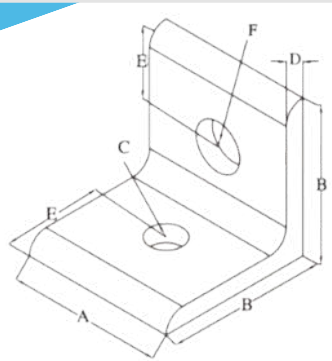

/Part No	QTY	Description
5094 & 5339	1	M5 × 8mm BHSCS & Econ T–Nut
5102 & 5344	1	M8 × 16mm BHSCS & Econ T–Nut

/Part No	A	B	C	D	E	F	kg	Compatibility Code
6006	18	25	ϕ6.30	3	12.5	ϕ8.30	0.0075	Joins 20 series to 40 series T–Slotted Protiles

2 HOLE STANDARD TRANSITION INSIDE CORNER BRACKET

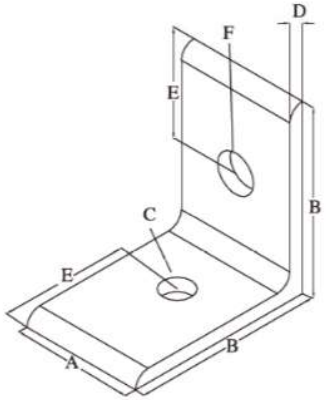

/Part No	QTY	Description
5099 & 5343	2	M6 × 12mm BHSCS & Econ T–Nut
5102 & 5344	2	M8 × 16mm BHSCS & Econ T–Nut

Part No	A	B	C	D	E	F	kg	Compatibility Code
6007	26	40.00	ϕ6.3	6.00	20.00	ϕ8.30	0.035	Joins 30 series to 40 series T–Slotted Protiles

CONTAMOS CON SERVICIO INTERNACIONAL

Devol
C&O

www.devol.mx

VENTAS: OMAR GARCÍA M.
Cel: 222 350 50 54 ventas@devol.mx
Av. Independencia 1811 San Pedro Cholula, Puebla.

3 HOLE INSIDE CORNER BRACKET

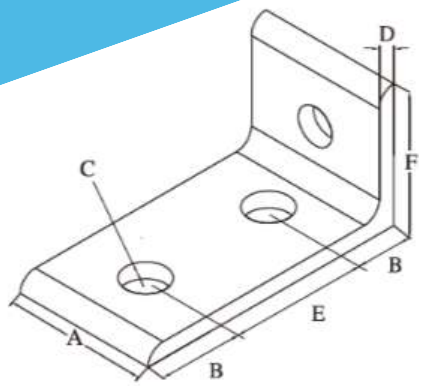

Part No	A	B	C	D	E	F	kg	Compatibility Code
6175	22	12.5	ϕ6.3	4	25	50	0.018	25
6008	26	15	ϕ6.3	4	30	60	0.026	30
6009	36	20	ϕ6.3	6	40	80	0.073	40

Part No	QTY	Description
5098 & 5341	3	M6 × 10mm BHSCS & Econ T–Nut
5099 & 5343	3	M6 × 12mm BHSCS & Econ T–Nut
5102 & 5344	3	M8 × 16mm BHSCS & Econ T–Nut

4 HOLE INSIDE CORNER BRACKET

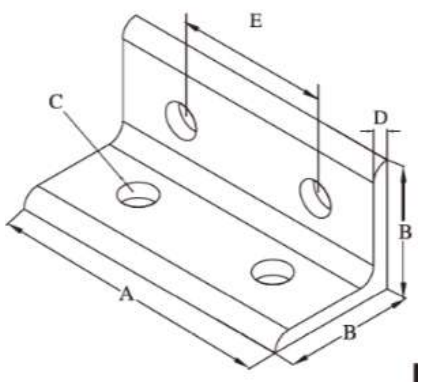

Part No	QTY	Description
5099 & 5343	4	M6 × 12mm BHSCS & Econ T–Nut
5102 & 5344	4	M8 × 16mm BHSCS & Econ T–Nut

Part No	A	B	C	D	E	kg	Compatibility Code
6012	56	30	ϕ6.3	4	30	0.032	3060
6013	76	40	ϕ8.3	6	40	0.102	4080

4 HOLE INSIDE CORNER BRACKET

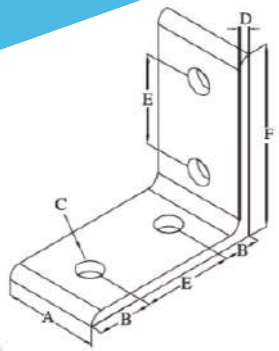

/Part No	QTY	Description
5098 & 5341	4	M6 × 10mm BHSCS & Econ T–Nut
5099 & 5343	4	M6 × 12mm BHSCS & Econ T–Nut
5102 & 5344	4	M8 × 16mm BHSCS & Econ T–Nut

Part No	A	B	C	D	E	F	kg	Compatibility Code
6177	22	12.5	ϕ6.3	4	25	50	0.029	25
6014	26	15	ϕ6.3	4	30	60	0.035	30
6015	36	20	ϕ8.3	6	40	80	0.096	40

4 HOLE TRANSITION INSIDE CORNER BRACKET

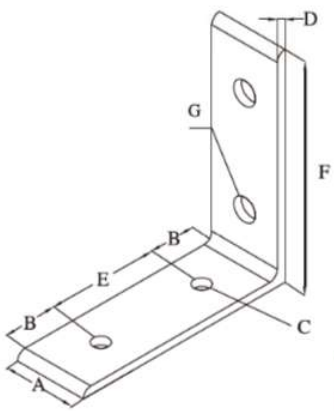

/Part No	QTY	Description
5099 & 5343	2	M6 × 12mm BHSCS & Econ T–Nut
5102 & 5344	2	M8 × 16mm BHSCS & Econ T–Nut

Part No	A	B	C	D	E	F	G	kg	Compatibility Code
6018	26	20	ϕ6.3	6	40	80	ϕ8.3	0.069	Joins 30 series to 40 series T–Slotted Protiles

4 HOLE LIFT DOUBLE WIDE TRANSITION INSIDE CORNER BRACKET

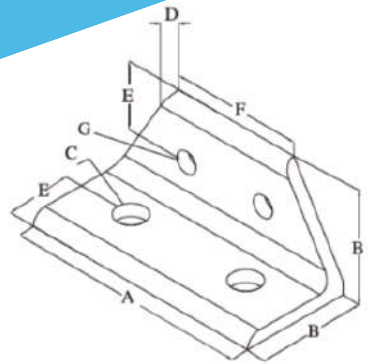

/Part No	QTY	Description
5099 & 5343	4	M6 × 12mm BHSCS & Econ T–Nut
5102 & 5344	4	M8 × 16mm BHSCS & Econ T–Nut

/Part No	A	B	C	D	E	F	G	kg	Compatibility Code
6019	76	40	ϕ8.3	6	20	56	ϕ6.3	0.085	Joins 3060 series to 4080 serie T–Slotted Protiles

6 HOLE INSIDE CORNER BRACKET

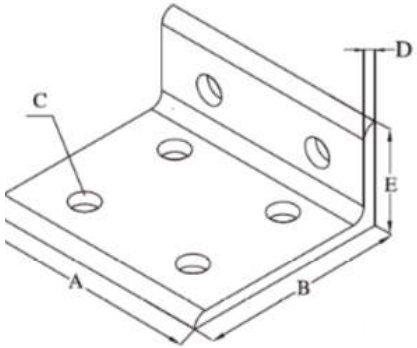

Part No	QTY	Description
5099 & 5343	6	M6 × 12mm BHSCS & Econ T–Nut
5102 & 5344	6	M8 × 16mm BHSCS & Econ T–Nut

/Part No	A	B	C	D	E	kg	Compatibility Code
6022	56	60	ϕ6.3	4	30	0.056	3060
6023	76	80	ϕ8.3	6	40	0.145	4080

6 HOLE INSIDE CORNER BRACKET

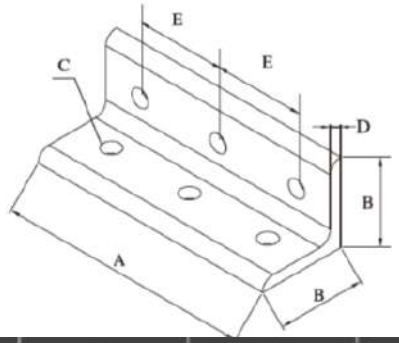

/Part No	QTY	Description
5102 & 5344	6	M8 × 16mm BHSCS & Econ T–Nut
5102 & 5344	6	M8 × 16mm BHSCS & Econ T–Nut

Part No	A	B	C	D	E	kg	Compatibility Code
6197	86	30	ϕ6.3	4	30	0.050	3090
6198	116	40	ϕ8.3	6	40	0.130	40120

6 HOLE CENTER INSIDE CORNER BRACKET

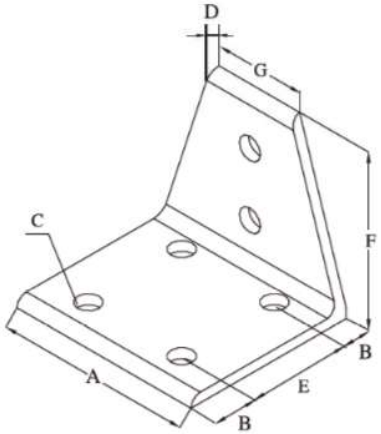

Part No	QTY	Description
5099 & 5343	6	M6 × 12mm BHSCS & Econ T–Nut
5102 & 5344	6	M8 × 16mm BHSCS & Econ T–Nut

/Part No	A	B	C	D	E	F	G	kg	Compatibility Code
6024	56	15	ϕ6.3	4	30	60	26	0.070	Joins 3030 series to 3060 series T–Slotted Protiles
6025	76	20	ϕ8.3	6	40	80	36	0.145	Joins 4040 series to 4080 series T–Slotted Protiles

6 HOLE RIGHT SIDE INSIDE CORNER BRACKET

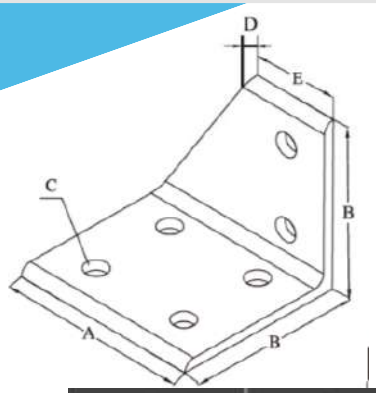

/Part No	QTY	Description
5099 & 5343	6	M6 × 12mm BHSCS & Econ T–Nut
5102 & 5344	6	M8 × 16mm BHSCS & Econ T–Nut

Part No	A	B	C	D	E	kg	Compatibility Code
6164	56	60	ϕ6.3	4	26	0.073	Joins 3030 series to 3060 series T–Slotted Protiles
6026	76	80	ϕ8.3	6	36	0.152	Joins 4040 series to 4080 series T–Slotted Protiles

6 HOLE LEFT SIDE INSIDE CORNER BRACKET

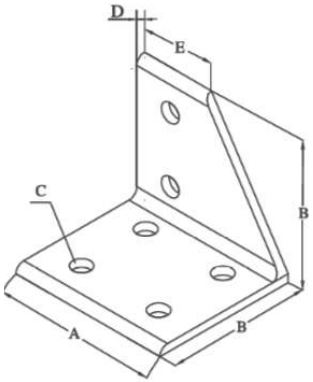

/Part No	QTY	Description
5099 & 5343	6	M6 × 12mm BHSCS & Econ T–Nut
5102 & 5344	6	M8 × 16mm BHSCS & Econ T–Nut

Part No	A	B	C	D	E	kg	Compatibility Code
6165	56	60	ϕ6.3	4	26	0.073	Joins 3030 series to 3060 series T–Slotted Protiles
6027	76	80	ϕ8.3	6	36	0.152	Joins 4040 series to 4080 series T–Slotted Protiles

8 HOLE INSIDE CORNER BRACKET

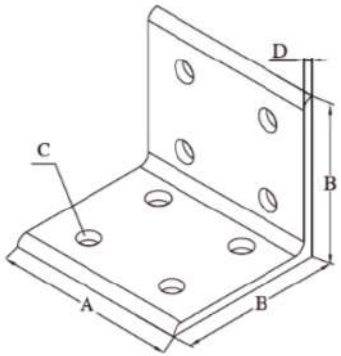

Part No	QTY	Description
5099 & 5343	8	M6 × 12mm BHSCS & Econ T–Nut
5102 & 5344	8	M8 × 16mm BHSCS & Econ T–Nut
5372 & 5336	8	M8 × 14mm BHSCS & Econ T–Nut
5372 & 5336	8	M8 × 14mm BHSCS & Econ T–Nut

Part No	A	B	C	D	kg	Compatibility Code
6028	56	60	ϕ6.3	4	0.075	3060
6029	76	80	ϕ8.3	6	0.195	4080
6159	86	80	ϕ8.3	6	0.230	4590
6161	96	80	ϕ8.3	6	0.258	50100

8 HOLE CENTER INSIDE CORNER BRACKET

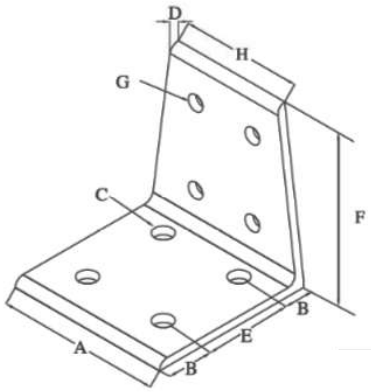

Part No	QTY	Description
5099 & 5343	4	M6 × 12mm BHSCS & Econ T–Nut
5102 & 5344	4	M8 × 16mm BHSCS & Econ T–Nut

Part No	A	B	C	D	E	F	G	H	kg	Compatibility Code
6030	80	20	ϕ8.3	6	40	80	ϕ6.3	62.5	0.048	Joins 3060 series to 4080 series T–Slotted Protiles

9 HOLE INSIDE CORNER BRACKET

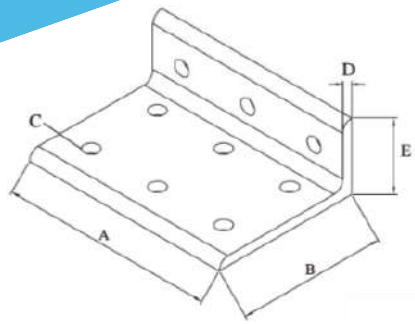

⅟/Part No	QTY	Description
5099 & 5343	9	M6×12mm BHSCS & Econ T-Nut
5102 & 5344	9	M8×16mm BHSCS & Econ T-Nut

Part No	A	B	C	D	E	kg	Compatibility Code
6200	86	60	ϕ6.3	4	30	0.073	3090&3090
6172	116	80	ϕ8.3	6	40	0.202	10420&40120

12 HOLE INSIDE CORNER BRACKET

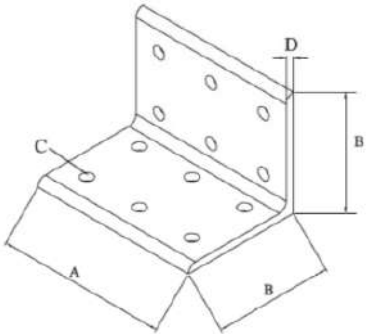

Part No	QTY	Description
5099 & 5343	12	M6×12mm BHSCS & Econ T-Nut
5102 & 5344	12	M8×16mm BHSCS & Econ T-Nut

Part No	A	B	C	D	kg	Compatibility Code
6173	86	60	ϕ6.3	4	0.099	3090
6199	116	80	ϕ8.3	6	0.272	40120

2 HOLE INSIDE GUSSET CORNER BRACKET

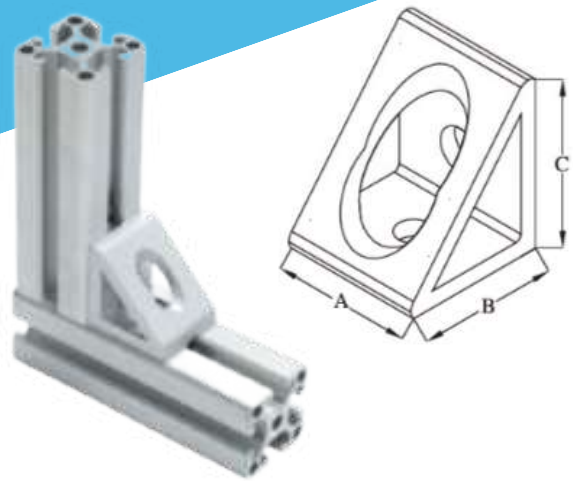

Part No	QTY	Description
5099 & 5343	2	M6 × 12mm BHSCS & Econ T–Nut
5102 & 5344	2	M8 × 16mm BHSCS & Econ T–Nut
5372 & 5336	2	M8 × 14mm BHSCS & Econ T–Nut

Part No	A	B	C	kg	Compatibility Code
6031	26	30	30	0.028	30
6032	36	40	40	0.057	40
6163	42	40	40	0.075	45
6156	46	60	60	0.115	50
6166	56	60	60	0.135	60

4 HOLE INSIDE GUSSET CORNER BRACKET

Part No	QTY	Description
5098 & 5341	4	M6 × 10mm BHSCS & Econ T–Nut
5099 & 5343	4	M6 × 12mm BHSCS & Econ T–Nut
5102 & 5344	4	M8 × 16mm BHSCS & Econ T–Nut
5372 & 5336	4	M8 × 14mm BHSCS & Econ T–Nut

Part No	A	B	C	kg	Compatibility Code
6204	22	50	50	0.041	25
6033	26	60	60	0.060	30
6034	36	80	80	0.125	40
6158	42	80	80	0.150	45

4 HOLE INSIDE GUSSET CORNER BRACKET

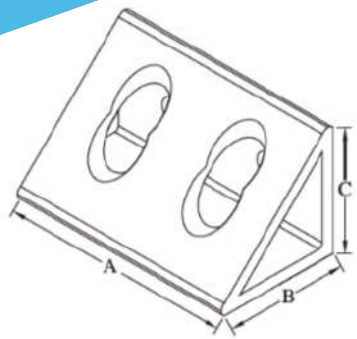

Part No	QTY	Description
5099 & 5343	4	M6 × 12mm BHSCS & Econ T–Nut
5102 & 5344	4	M8 × 16mm BHSCS & Econ T–Nut

/Part No	A	B	C	kg	Compatibility Code
6035	56	30	30	0.050	3060
6036	76	40	40	0.126	4080

8 HOLE INSIDE GUSSET CORNER BRACKET

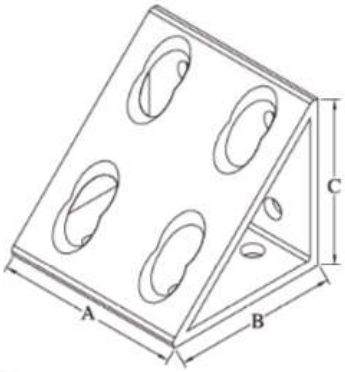

/Part No	QTY	Description
5099 & 5343	8	M6 × 12mm BHSCS & Econ T–Nut
5102 & 5344	8	M8 × 16mm BHSCS & Econ T–Nut
5372 & 5336	8	M8 × 14mm BHSCS & Econ T–Nut
5372 & 5336	8	M8 × 14mm BHSCS & Econ T–Nut

/Part No	A	B	C	kg	Compatibility Code
6037	56	60	60	0.125	3060
6038	76	80	80	0.25	4080
6160	86	80	80	0.30	4590
6162	96	80	80	0.35	50100

2 HOLE 90° INSIDE CORNER BRACKET

90° SUPPORT CONNECTOR

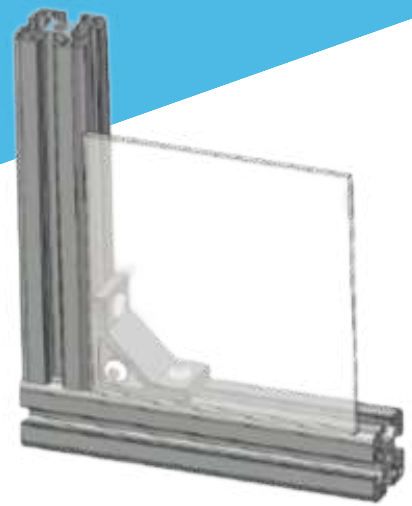

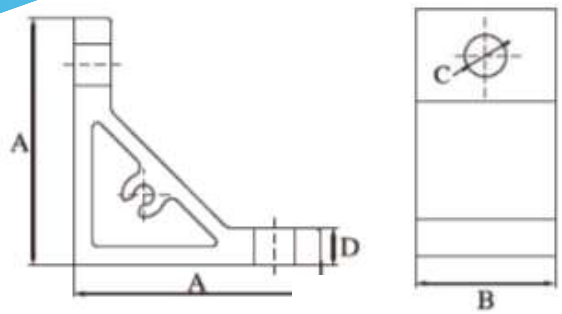

Part No	QTY	Description
5100 & 5343	2	M6 × 16mm BHSCS & Econ T–Nut
5103 & 5344	2	M8 × 18mm BHSCS & Econ T–Nut
5372 & 5336	2	M8 × 18mm BHSCS & Econ T–Nut

Part No	A	B	C	D	kg	Compatibility Code
6151	53	22	ϕ6.5	8	0.05	30A
6152	53	32	ϕ9	8	0.07	40A
6208	53	42	ϕ9	8	0.09	45A

2 HOLE 90° INSIDE CORNER BRACKET

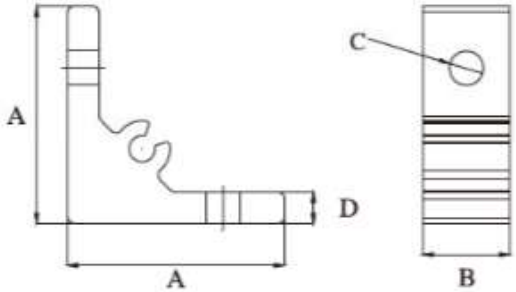

Part No	QTY	Description
5095 & 5339	2	M5 × 10mm BHSCS & Econ T–Nut
5100 & 5343	2	M6 × 16mm BHSCS & Econ T–Nut
5103 & 5344	2	M8 × 18mm BHSCS & Econ T–Nut
5372 & 5336	2	M8 × 18mm BHSCS & Econ T–Nut

Part No	A	B	C	D	kg	Compatibility Code
6221	35	14	ϕ5.5	5	0.016	20
6222	35	22	ϕ6.5	5	0.025	30
6223	35	32	ϕ9	5	0.036	40
6224	35	37	ϕ9	5	0.042	45

2 HOLE 90° INSIDE CORNER BRACKET

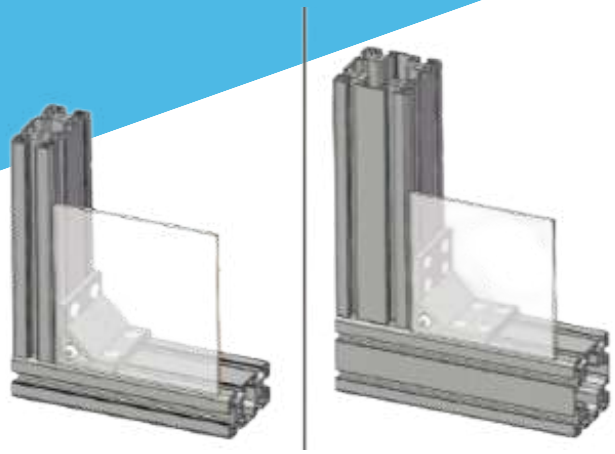

90° SUPPORT CONNECTOR

/Part No	QTY	Description
5375 & 5343	4	M6 × 14mm BHSCS & Econ T–Nut
5102 & 5344	4	M8 × 16mm BHSCS & Econ T–Nut
5372 & 5344	8	M8 × 14mm BHSCS & Econ T–Nut

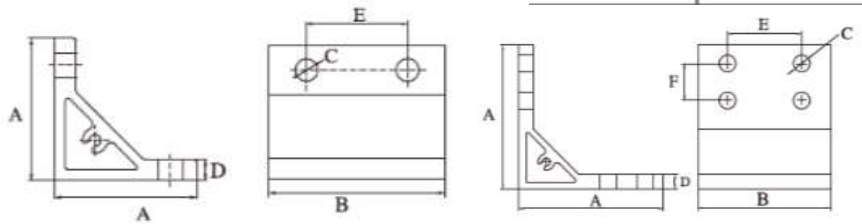

Part No	A	B	C	D	E	F	kg	Compatibility Code
6153	53	52	ϕ6.5	8	30	—	0.11	3060A
6154	53	72	ϕ9	8	40	—	0.15	4080A
6296	78	72	ϕ9	8	40	20	0.24	8080A

2 HOLE 90° INSIDE CORNER BRACKET

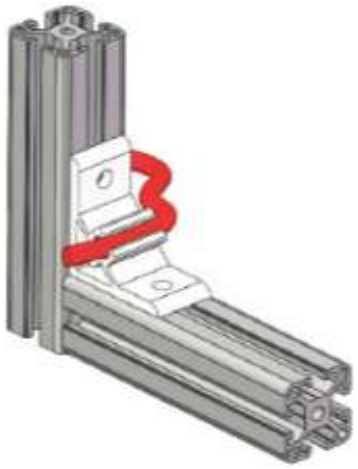

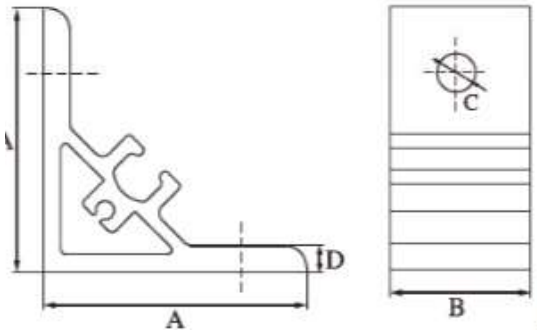

Part No	QTY	Description
5100 & 5343	2	M6 × 16mm BHSCS & Econ T–Nut
5102 & 5344	2	M8 × 16mm BHSCS & Econ T–Nut
5372 & 5336	2	M8 × 18mm BHSCS & Econ T–Nut

Part No	A	B	C	D	kg	Compatibility Code
6147	60	22	ϕ6.5	6	0.039	30B
6148	60	32	ϕ9	6	0.058	40B
6207	60	37	ϕ9	6	0.075	45B

4 HOLE 90° INSIDE CORNER BRACKET

90° SUPPORT CONNECTOR

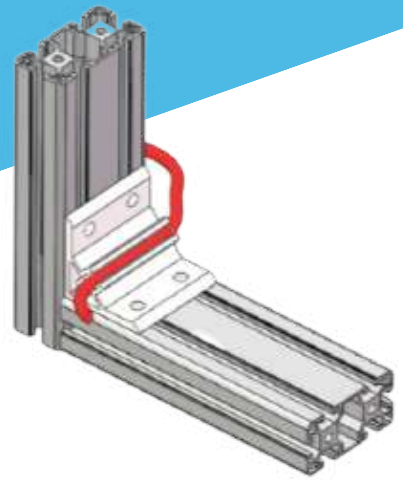

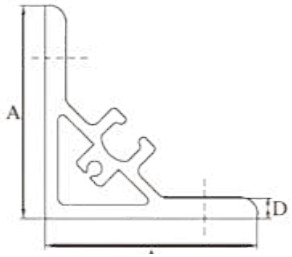

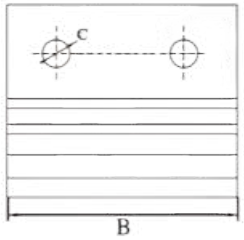

Part No	QTY	Description
5100 & 5343	4	M6 × 16mm BHSCS & Econ T–Nut
5102 & 5344	4	M8 × 16mm BHSCS & Econ T–Nut

Part No	A	B	C	D	kg	Compatibility Code
6149	60	52	ϕ6.5	6	0.098	3060B
6150	60	72	ϕ9	6	0.137	4080B

2 HOLE STRONG BRACKET

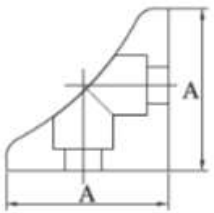

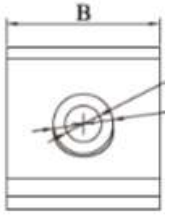

Part No	QTY	Description
5147 & 5343	2	M6 × 12mm SHCS & Econ T–Nat
5110 & 5344	2	M8 × 16mm SHCS & Econ T–Nat
5370 & 5336	2	M8 × 14mm SHCS & Drop–In T–Nuts
5110 & 5336	2	M8 × 16mm SHCS & Drop–In T–Nuts
5110 & 5343	2	M8 × 16mm SHCS & Econ T–Nat

Part No	A	B	C	D	kg	Compatibility Code
6209	28	26	ϕ6.5	ϕ12	0.025	3030H
6210	38	36	ϕ8.5	ϕ14	0.068	4040H
6211	43	40	ϕ8.5	ϕ14	0.091	4545H–B
6121	48	46	ϕ8.5	ϕ14	0.123	5050H
6213	58	56	ϕ8.5	ϕ14	0.164	6060H–B

2 HOLE STRONG BRACKET

90° SUPPORT CONNECTOR

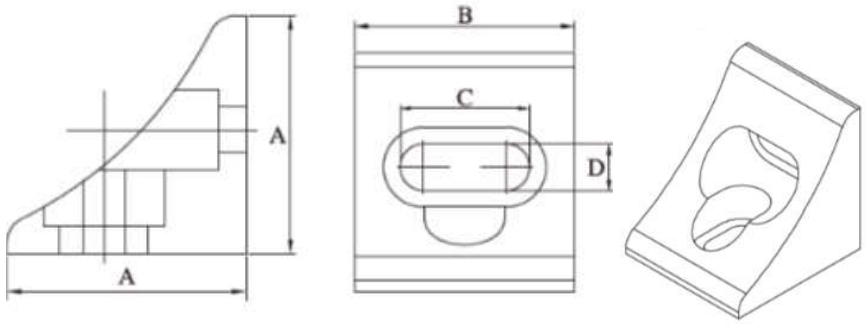

/Part No	QTY	Description
5102 & 5336	2	M8 × 16mm SHCS & Drop–In T–Nuts

/Part No	A	B	C	D	kg	Compatibility Code
6214	43	40	23.5	8.5	0.074	4545H

4 HOLE STRONG BRACKET

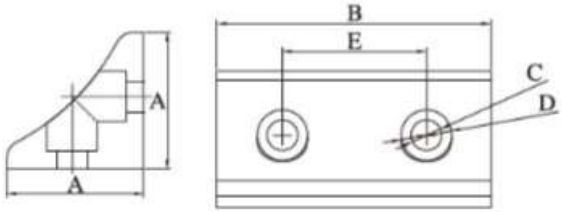

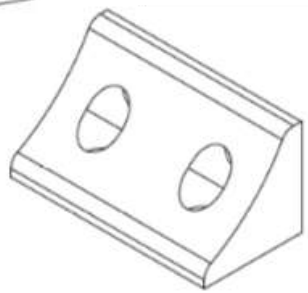

Part No	QTY	Description
5147 & 5343	4	M6 × 12mm SHCS & Econ T–Nat
5110 & 5344	4	M8 × 16mm SHCS & Econ T–Nut
5370 & 5336	4	M8 × 14mm SHCS & Drop–In T–Nuts
5110 & 5336	4	M8 × 16mm SHCS & Drop–In T–Nuts

/Part No	A	B	C	D	E	kg	Compatibility Code
6215	28	56	ϕ6.5	ϕ12	30	0.054	3060H
6216	38	76	ϕ8.5	ϕ14	40	0.143	4080H
6217	43	86	ϕ8.5	ϕ14	45	0.197	4590H
6218	48	96	ϕ8.5	ϕ14	50	0.259	50100H

8 HOLE STRONG BRACKET

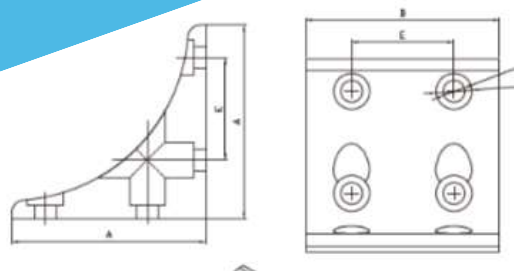

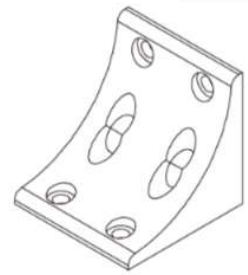

90° SUPPORT CONNECTOR

Part No	QTY	Description
5373 & 5343	8	M6×14mm SHCS & Econ T-Nut
5110 & 5344	8	M8×16mm SHCS & Econ T-Nut

Part No	A	B	C	D	E	kg	Compatibility Code
6219	58	56	ϕ8.5	ϕ14	30	0.137	6060H
6220	76	76	ϕ8.5	ϕ14	40	0.368	8080H

2 HOLE STRONG BRACKET

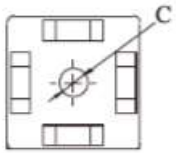

INJECTION MOLDING PA66+GF30

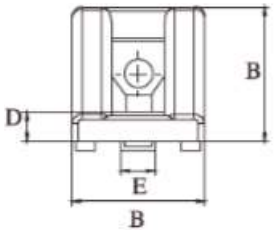

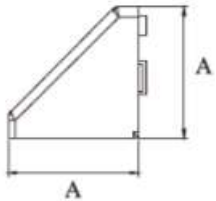

- Pa66 NYLON +25% GLASS FIBER REINFORCED PP.
- BEARING CAPACITY UP TO 100KG.
- TWO DIFFERENT TYPES OF POSITIONING BLOCKS ARE AVAILABLE FOR SLOT 8 AND SLOT 10.

Part No	QTY	Description
5486-ZT8 & 5055	2	M8×16mm LHSCS & Roll-in T-Nut

Part No	A	B	C	D	D	kg	Compatibility Code
ML-1013-8	40	40	ϕ8.5	8.6	8	0.04	40L-8
ML-1013-10	40	40	ϕ8.5	8.6	10	0.04	40L-10

2 HOLE STEEL BRACKET

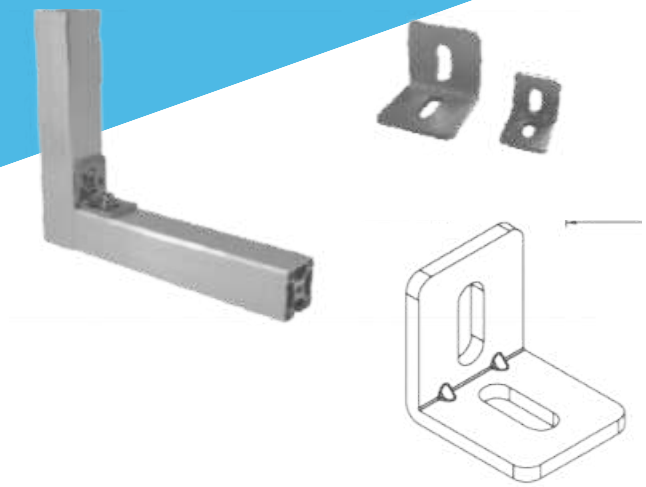

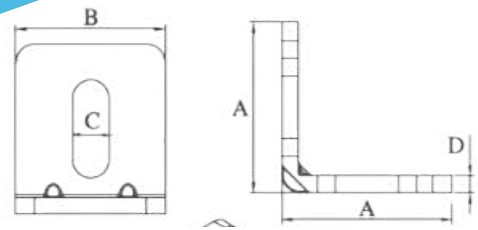

Part No	QTY	Description
5098 & 5271	2	M6 × 10mm BHSCS & Slide–In T–Nuts
5099 & 5343	2	M6 × 12mm BHSCS & Econ T–Nuts
5099 & 5343	2	M6 × 12mm BHSCS & Econ T–Nuts
5102 & 5344	2	M8 × 16mm BHSCS & Econ T–Nuts
5102 & 5311	2	M8 × 16mm BHSCS & Drop–In T–Nuts
5102 & 5344	2	M8 × 16mm BHSCS & Econ T–Nuts

Part No	A	B	C	D	kg	Compatibility Code
1177	25	18	ϕ6.5	4	0.021	2020G
1177–1	25	18	ϕ6.5	4	0.021	2020G–B(SUS304)
1181	30	25	ϕ6.5	4	0.034	2525G
1181–1	30	25	ϕ6.5	4	0.034	2525G–B(SUS304)
1182	30	25	ϕ6.5	4	0.034	3030G
1182–1	30	25	ϕ6.5	4	0.034	3030G–B(SUS304)
1186	40	35	ϕ8.5	4	0.066	4040G
1186–1	40	35	ϕ8.5	4	0.066	4040G–B(SUS304)
1190	42	40	ϕ8.5	4	0.082	4545G
1190–1	42	40	ϕ8.5	4	0.082	4545G–B(SUS304)
1192	45	45	ϕ8.5	4	0.103	5050G
1192–1	45	45	ϕ8.5	4	0.103	5050G–B(SUS304)

2 HOLE STEEL BRACKET

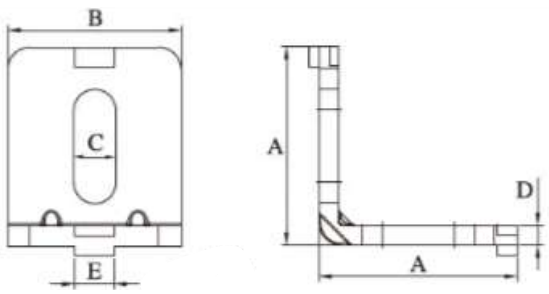

Part No	QTY	Description
5098 & 5271	2	M6 × 10mm BHSCS & Slide–In T–Nuts
5099 & 5343	2	M6 × 12mm BHSCS & Econ T–Nuts
5102 & 5344	2	M8 × 16mm BHSCS & Econ T–Nuts
5102 & 5311	2	M8 × 16mm BHSCS & Drop–In T–Nuts
5102 & 5344	2	M8 × 16mm BHSCS & Econ T–Nuts

Part No	A	B	C	D	E	kg	Compatibility Code
1178	25	18	ϕ6.5	4	6	0.021	2020G–6
1178–1	25	18	ϕ6.5	4	6	0.021	2020G–6–B(SUS304)
1183	30	25	ϕ6.5	4	8	0.034	3030G–8
1183–1	30	25	ϕ6.5	4	8	0.034	3030G–8–B(SUS304)
1187	40	35	ϕ8.5	4	8	0.066	4040G–8
1187–1	40	35	ϕ8.5	4	8	0.066	4040G–8–B(SUS304)
1191	42	40	ϕ8.5	4	10	0.082	4545G–10
1191–1	42	40	ϕ8.5	4	10	0.082	4545G–10–B(SUS304)
1193	45	45	ϕ8.5	4	8	0.103	5050G–10
1193–1	45	45	ϕ8.5	4	8	0.103	5050G–10–B(SUS304)

4 HOLE STEEL BRACKET/SURFACE NICKEL PLATING

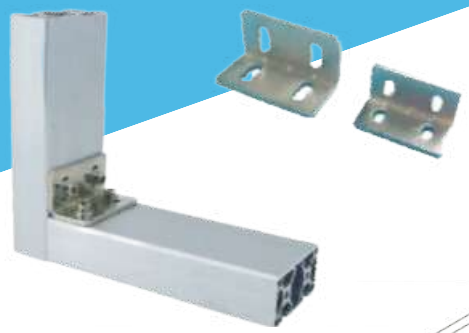

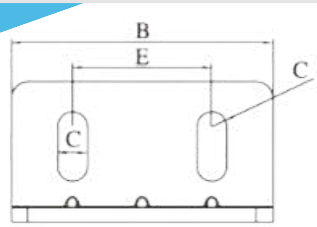

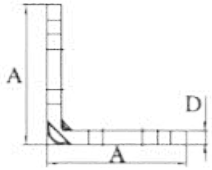

Part No	QTY	Description
5098 & 5271	4	M6×10mm BHSCS & Slide-In T-Nuts
5099 & 5343	4	
5102 & 5344	4	M8×16mm BHSCS & Econ T-Nuts
5102 & 5311	4	M8×16mm BHSCS & Drop-In T-Nuts
5102 & 5344	4	M8×16mm BHSCS & Econ T-Nuts

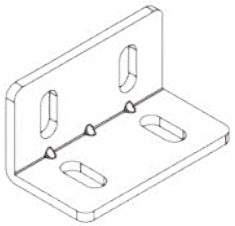

⅞/Part No	A	B	C	D	E	kg	Compatibility Code
1179	25	35	ϕ6.5	4	20	0.041	2040G
1179-1	25	35	ϕ6.5	4	20	0.041	2040G-B(SUS304)
1184	30	55	ϕ6.5	4	30	0.080	3060G
1184-1	30	55	ϕ6.5	4	30	0.080	3060G-B(SUS304)
1188	40	75	ϕ8.5	4	40	0.149	4080G
1188-1	40	75	ϕ8.5	4	40	0.149	4080G-B(SUS304)
1211	42	85	ϕ8.5	4	45	0.180	4590G
1211-1	42	85	ϕ8.5	4	45	0.180	4590G-B(SUS304)
1196	45	95	ϕ8.5	4	50	0.220	50100G
1196-1	45	95	ϕ8.5	4	50	0.220	50100G-B(SUS304)

4 HOLE STEEL BRACKET/SURFACE NICKEL PLATING

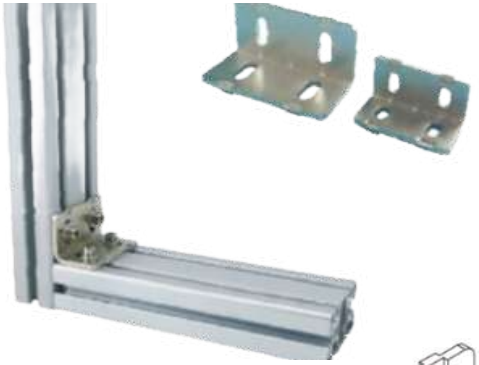

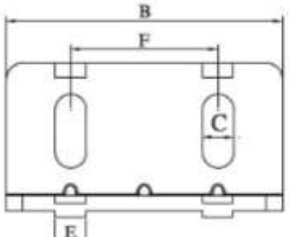

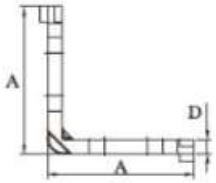

⅞/Part No	QTY	Description
5098 & 5271	4	M6×10mm BHSCS & Slide-In T-Nuts
5098 & 5343	4	M6×12mm BHSCS & Econ T-Nuts
5102 & 5344	4	M8×16mm BHSCS & Econ T-Nuts
5102 & 5311	4	M8×16mm BHSCS & Drop-In T-Nuts
5102 & 5344	4	M8×16mm BHSCS & Econ T-Nuts

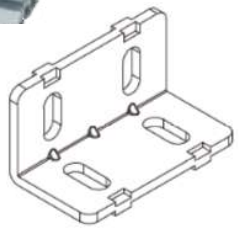

Part No	A	B	C	D	E	F	kg	Compatibility Code
1180	25	35	ϕ6.5	4	6	25	0.041	2040G-6
1180-1	25	35	ϕ6.5	4	6	25	0.041	2040G-6-B(SUS304)
1185	30	55	ϕ6.5	4	8	30	0.080	3060G-8
1185-1	30	55	ϕ6.5	4	8	30	0.080	3060G-8-B(SUS304)
1189	40	75	ϕ8.5	4	8	40	0.149	4080G-8
1189-1	40	75	ϕ8.5	4	8	40	0.149	4080G-8-B(SUS304)
1212	42	85	ϕ8.5	4	10	45	0.180	4590G-10
1212-1	42	85	ϕ8.5	4	10	45	0.180	4590G-10-B(SUS304)
1197	45	95	ϕ8.5	4	8	50	0.220	50100G-10
1197-1	45	95	ϕ8.5	4	8	50	0.220	50100G-10-B(SUS304)

STEEL STRONG BRACKET

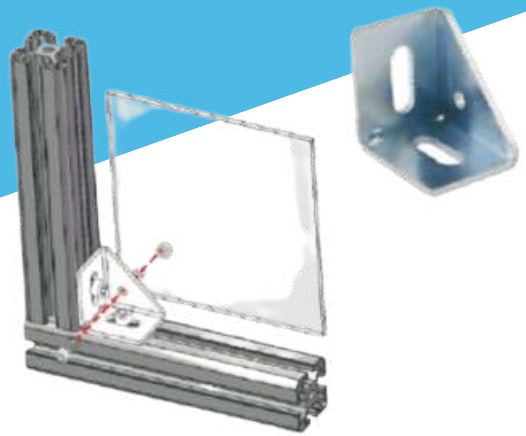

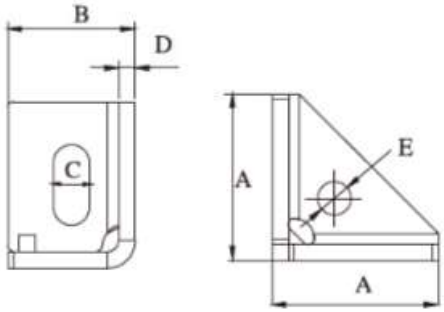

Part No	QTY	Description
5363 & 5341	2	M6×10mm HSCS & Econ T-Nuts
5147 & 5067	2	M6×12mm HSCS & Slide-In T-Nuts
5148 & 5071	2	M8×16mm HSCS & Slide-In T-Nuts
5148 & 5336	2	M8×16mm HSCS & Slide-In T-Nuts

产/Part No	A	B	C	D	E	kg	Compatibility Code
1227	30	23	ϕ6.5	3	ϕ6	0.030	2525L
1228	35	26	ϕ6.5	3	ϕ6	0.042	3030L
1229	45	36	ϕ8.5	3	ϕ6	0.074	4040L
1237	50	42	ϕ9	3	ϕ6	0.104	4545L

STEEL STRONG BRACKET

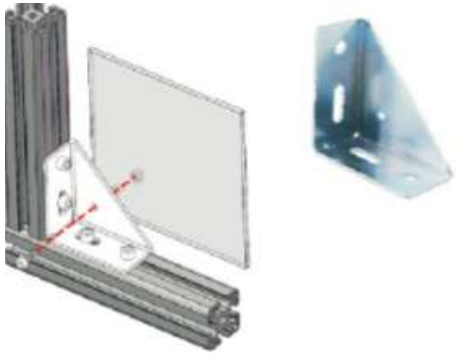

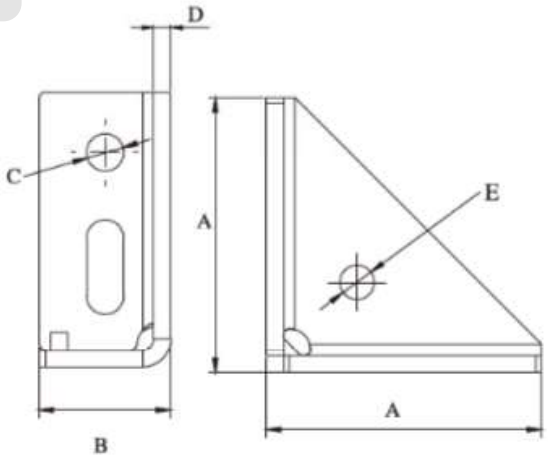

产/Part No	QTY	Description
5363 & 5341	4	M6×10mm HSCS & Econ T-Nuts
5249 & 5068	4	M8×12mm HSCS & Slide-In T-Nuts
5110 & 5071	4	M8×16mm HSCS & Slide-In T-Nuts
5110 & 5336	4	M8×16mm HSCS & Slide-In T-Nuts

/Part No	A	B	C	D	E	kg	Compatibility Code
1238	48	23	ϕ6.5	3	ϕ6	0.055	2550L
1239	58	26	ϕ8.5	3	ϕ6	0.089	3060L
1240	78	36	ϕ8.5	3	ϕ6	0.177	4080L
1241	88	42	ϕ9	3	ϕ6	0.235	4590L

2 HOLE JOINING STRIP

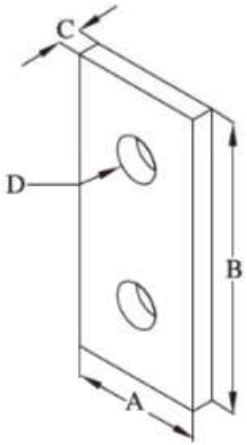

部/Part No	QTY	Description
5094 & 5339	2	M5 × 8mm BHSCS & Econ T–Nut
5099 & 5343	2	M6 × 12mm BHSCS & Econ T–Nut
5102 & 5344	2	M8 × 16mm BHSCS & Econ T–Nut
5102 & 5344	2	M8 × 16mm BHSCS & Econ T–Nut

部/Part No	A	B	C	D	kg	Compatibility Code
6039	18	40	4	5.3	0.013	20
6040	28	60	4	6.3	0.016	30
6041	38	80	6	8.3	0.048	40
6042	42	90	6	8.3	0.058	45

2 HOLE TRANSITION CENTER STRIP

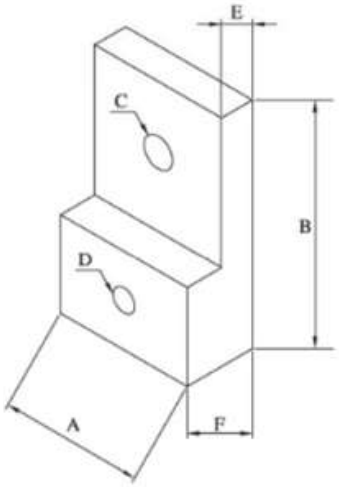

部/Part No	QTY	Description
5241 & 5320	1	M5 × 25mm BHSCS & Econ T–Nuts
5102 & 5344	1	M8 × 16mm BHSCS & Econ T–Nuts

部/Part No	A	B	C	D	E	F	kg	Compatibility Code
6179	37	63	ϕ8.3	ϕ6.3	9	19	0.080	Joins 2020 series to 4040 series T–Slotted Protiles

2 HOLE TRANSITION SLOTTED CENTER STRIP

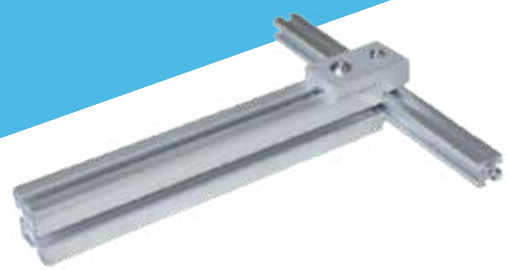

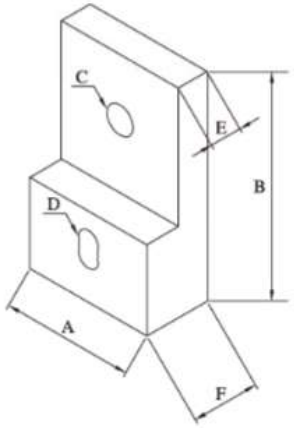

⅌/Part No	QTY	Description
5241 & 5320	1	M5 × 25mm BHSCS & Econ T–Nuts
5102 & 5344	1	M8 × 16mm BHSCS & Econ T–Nuts

Part No	A	B	C	D	E	F	kg	Compatibility Code
6180	37	63	ϕ8.3	ϕ6.3	9	19	0.080	Joins 2020 series to 4040 series T–Slotted Protiles

2 HOLE TRANSITION STRIP

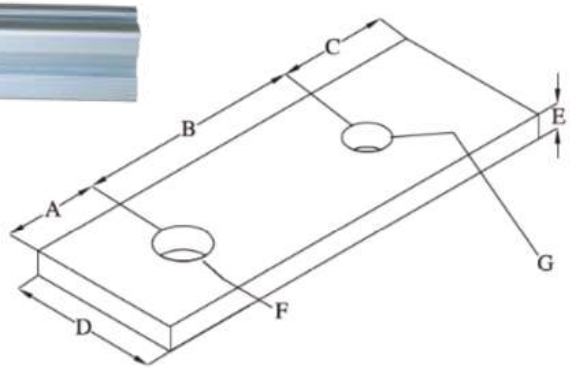

Part No	QTY	Description
5099 & 5343	1	M6 × 12mm BHSCS & Econ T–Nut
5102 & 5344	1	M8 × 16mm BHSCS & Econ T–Nut

/Part No	A	B	C	D	E	F	G	kg	Compatibility Code
6043	20	35	15	28	4	ϕ8.3	ϕ6.3	0.014	Joins 30 series to 40 series T–Slotted Protiles

3 HOLD JOINING STRIP

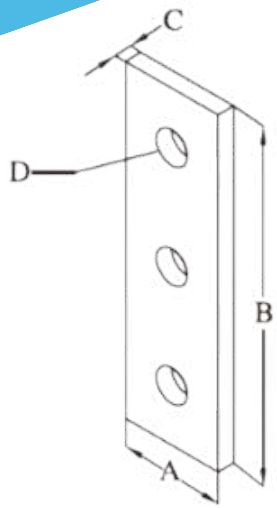

⅁/Part No	QTY	Description
5094 & 5339	3	M5 × 8mm BHSCS & Econ T–Nut
5099 & 5343	3	M6 × 12mm BHSCS & Econ T–Nut
5102 & 5344	3	M8 × 16mm BHSCS & Econ T–Nut
5102 & 5344	3	M8 × 16mm BHSCS & Econ T–Nut

/Part No	A	B	C	D	kg	Compatibility Code
6044	18	60	4	5.3	0.012	20
6045	28	90	4	6.3	0.024	30
6046	38	120	6	8.3	0.073	40
6047	42	135	6	8.3	0.090	45

3 HOLD JOINING STRIP

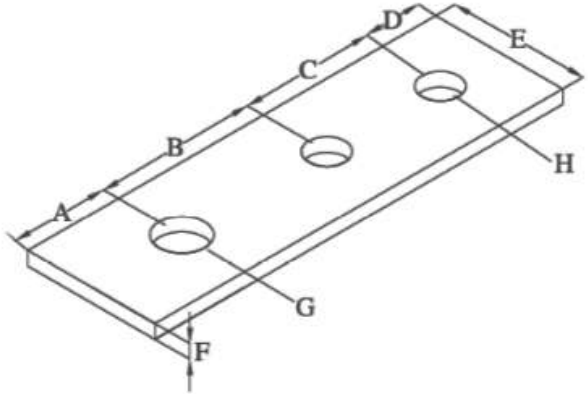

/Part No	QTY	Description
5099 & 5343	2	M6 ×12mm BHSCS & Econ T–Nut
5102 & 5344	1	M8 × 16mm BHSCS & Econ T–Nut

/Part No	A	B	C	D	E	F	G	H	kg	Compatibility Code
6048	20	32.5	25	12.5	28	6	ϕ8.3	ϕ6.3	0.04	Joins 3030 series to 4040 series T–Slotted Protiles

4 HOLE JOINING STRIP

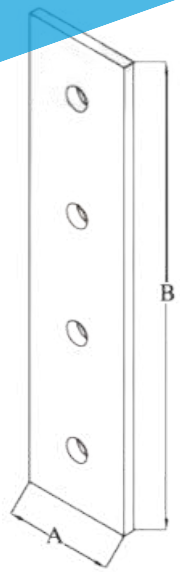

/Part No	QTY	Description
5099 & 5343	4	M6×12mm BHSCS & Econ T–Nut
5102 & 5344	4	M8×16mm BHSCS & Econ T–Nut

/Part No	A	B	kg	Compatibility Code
6050	28	120	0.037	30
6051	38	160	0.098	40

4 HOLE TRANSITION CENTER STRIP

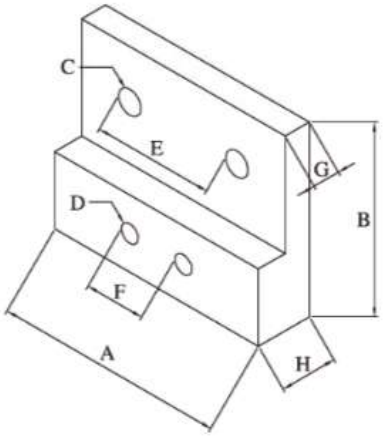

/Part No	QTY	Description
5241 & 5320	2	M5×25mm BHSCS & Econ T–Nuts
5102 & 5344	2	M8×16mm BHSCS & Econ T–Nuts

Part No	A	B	C	D	E	F	G	H	kg	Compatibility Code
6181	76	63	ϕ8.3	ϕ6.3	40	20	9	19	0.160	Joins 2040 series to 4040 series T–Slotted Protiles

4 HOLE TRANSITION CENTER STRIP

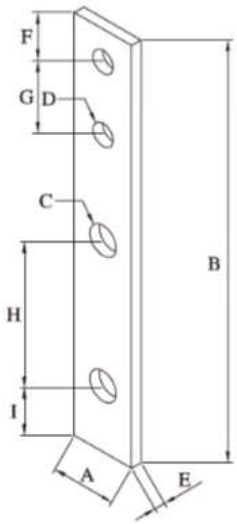

Part No	QTY	Description
5241 & 5320	2	M5 × 25mm BHSCS & Econ T–Nuts
5102 & 5344	2	M8 × 16mm BHSCS & Econ T–Nuts

Part No	A	B	C	D	E	F	G	H	I	kg	Compatibility Code
6182	18	116	ϕ8.3	ϕ6.3	3	9	20	40	18	0.020	Joins 2020 series to 4080 series T–Slotted Protiles

4 HOLE TRANSITION DOUBLE STRIP

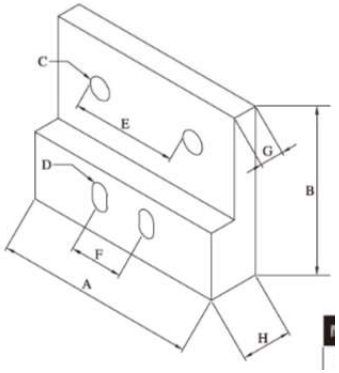

Part No	QTY	Description
5241 & 5320	2	M5 × 25mm BHSCS & Econ T–Nuts
5102 & 5344	2	M8 × 16mm BHSCS & Econ T–Nuts

Part No	A	B	C	D	E	F	G	H	kg	Compatibility Code
6183	76	63	ϕ8.3	ϕ6.3	40	20	9	19	0.160	Joins 2020 series to 4080 series T–Slotted Protiles

4 HOLE JOINING PLATE

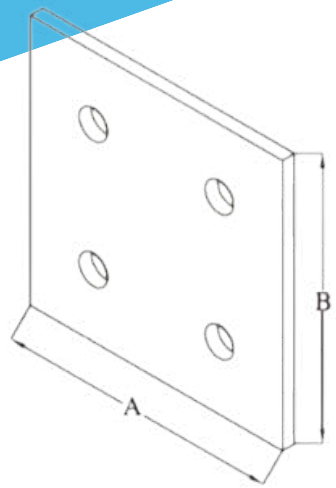

Part No	QTY	Description
5099 & 5343	4	M6 × 12mm BHSCS & Econ T–Nut
5102 & 5344	4	M8 × 16mm BHSCS & Econ T–Nut

Part No	A	B	kg	Compatibility Code
6052	60	60	0.025	30
6053	80	80	0.095	40

4 HOLE TRANSITION PLATE

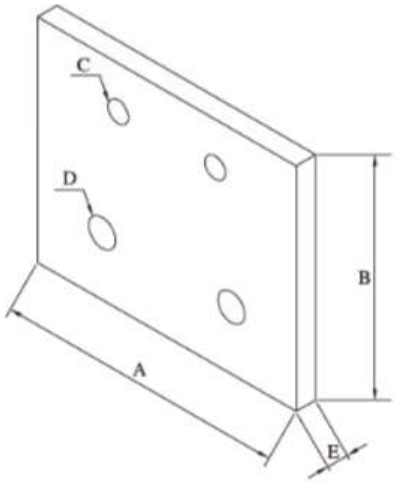

Part No	QTY	Description
5099 & 5343	2	M6 × 12mm BHSCS & Econ T–Nut
5102 & 5344	2	M8 × 16mm BHSCS & Econ T–Nut

Part No	A	B	C	D	E	kg	Compatibility Code
6184	80	66	ϕ6.3	ϕ8.3	6	0.080	Joins 3030 series to 4040 series T–Slotted Protiles

6 HOLE JOINING PLATE

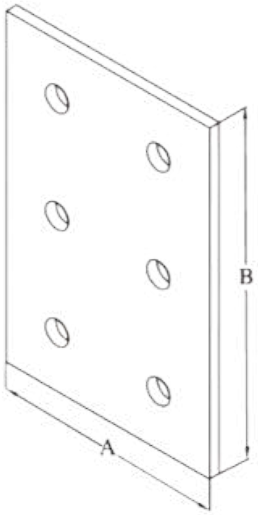

/Part No	QTY	Description
5099 & 5343	6	M6×12mm BHSCS & Econ T-Nut
5102 & 5344	6	M8×16mm BHSCS & Econ T-Nut

/Part No	A	B	kg	Compatibility Code
6054	60	90	0.057	3030&3060
6055	80	120	0.155	4040&4080

6 HOLE TRANSITION DOUBLE STRIP

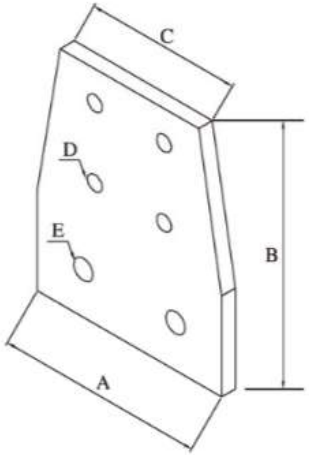

Part No	QTY	Description
5099 & 5343	4	M6×12mm BHSCS & Econ T-Nut
5102 & 5344	2	M8×16mm BHSCS & Econ T-Nut

/Part No	A	B	C	D	E	kg	Compatibility Code
6185	80	96	60	ϕ6.3	ϕ8.3	0.110	Joins 3060 series to 4040 series T-Slotted Protiles

6 HOLE TRANSITION DOUBLE STRIP

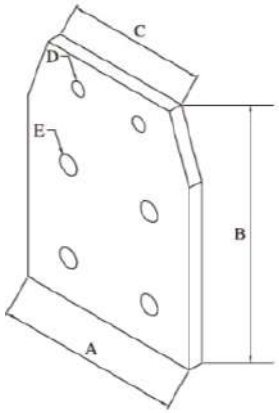

/Part No	QTY	Description
5099 & 5343	2	M6×12mm BHSCS & Econ T–Nut
5102 & 5344	4	M8×16mm BHSCS & Econ T–Nut

/Part No	A	B	C	D	E	kg	Compatibility Code
6186	80	106	60	ϕ6.3	ϕ8.3	0.130	Joins 3060 series to 4080 series T–Slotted Protiles

8 HOLE JOINING PLATE

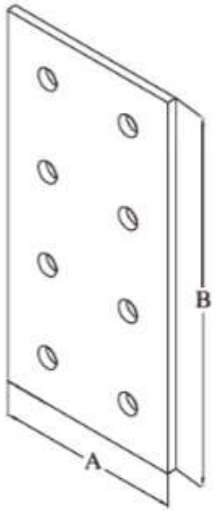

/Part No	QTY	Description
5099 & 5343	8	M6×12mm BHSCS & Econ T–Nut
5102 & 5344	8	M8×16mm BHSCS & Econ T–Nut

Part No	A	B	kg	Compatibility Code
6056	60	120	0.080	3060
6057	80	160	0.215	4080

8 HOLE TRANSITION PLATE

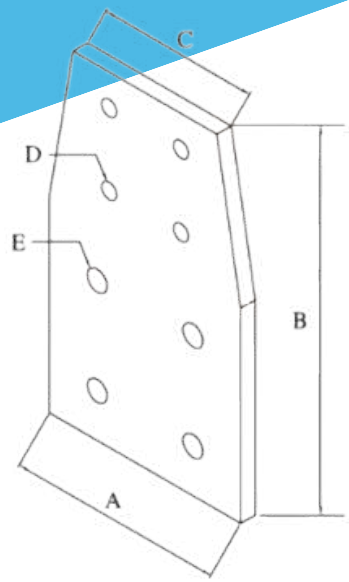

Part No	QTY	Description
5099 & 5343	4	M6 × 12mm BHSCS & Econ T–Nut
5102 & 5344	4	M8 × 16mm BHSCS & Econ T–Nut

Part No	A	B	C	D	E	kg	Compatibility Code
6187	80	136	60	ϕ6.3	ϕ8.3	0.160	Joins 3060 series to 4080 series T–Slotted Protiles

4 HOLE 90° JOINING PLATE

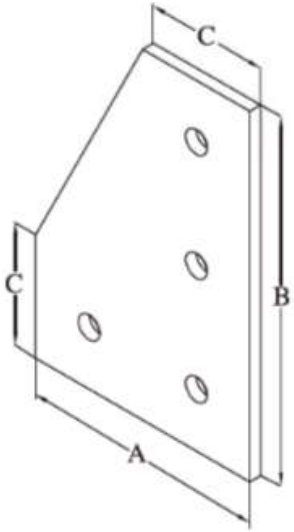

Part No	QTY	Description
5099 & 5343	7	M6 × 12mm BHSCS & Econ T–Nut
5102 & 5344	7	M8 × 16mm BHSCS & Econ T–Nut

Part No	A	B	C	kg	Compatibility Code
6058	60	90	30	0.04	30
6059	80	120	40	0.118	40

5 HOLE 90° TRANSITION PLATE

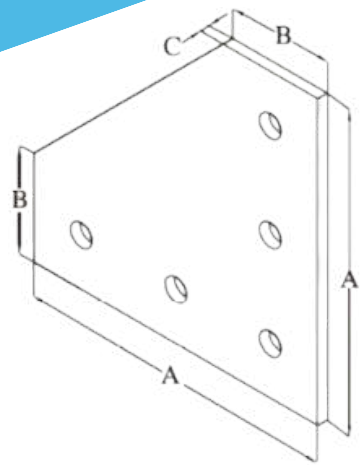

/Part No	QTY	Description
5094 & 5339	5	M5 × 8mm BHSCS & Econ T–Nut
5099 & 5343	5	M6 × 12mm BHSCS & Econ T–Nut
5102 & 5344	5	M8 × 16mm BHSCS & Econ T–Nut
5372 & 5336	5	M8 × 14mm BHSCS & Slide–In T–Nuts

/Part No	A	B	C	kg	Compatibility Code
6060	60	20	4	0.056	20
6061	90	30	4	0.064	30
6062	120	40	6	0.168	40
6063	135	45	6	0.168	45

6 HOLE 90° JOINING PLATE

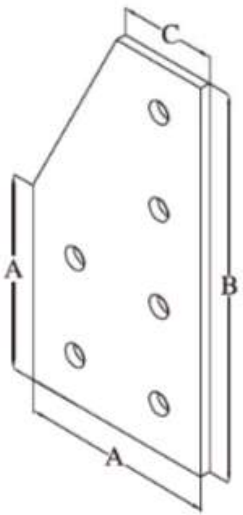

/Part No	QTY	Description
5099 & 5343	6	M6 ×12mm BHSCS & Econ T–Nut
5102 & 5344	6	M8 × 16mm BHSCS & Econ T–Nut

Part No	A	B	C	kg	Compatibility Code
6064	60	120	30	0.053	3060&3030
6065	80	160	40	0.168	4080&4040

7 HOLE 90° TRANSITION PLATE

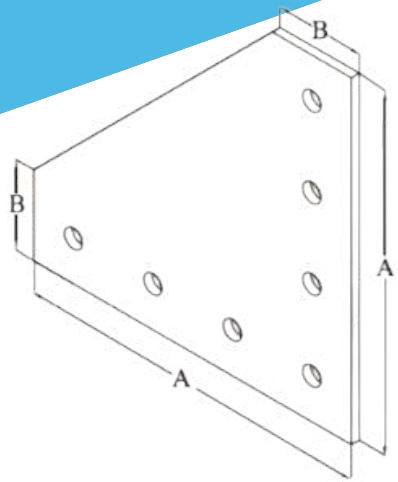

Part No	QTY	Description
5099 & 5343	7	M6 × 12mm BHSCS & Econ T–Nut
5102 & 5344	7	M8 × 16mm BHSCS & Econ T–Nut

Part No	A	B	kg	Compatibility Code
6066	120	30	0.089	30
6067	160	40	0.279	40

7 HOLE 90° JOINING PLATE

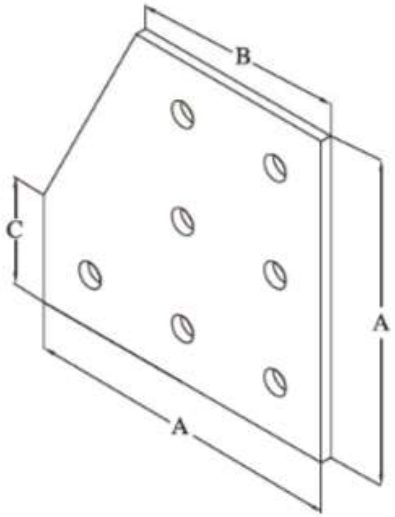

Part No	QTY	Description
5099 & 5343	7	M6 × 12mm BHSCS & Econ T–Nut
5102 & 5344	7	M8 × 16mm BHSCS & Econ T–Nut

Part No	A	B	C	kg	Compatibility Code
6068	90	60	30	0.08	3030 & 3060
6069	120	80	40	0.168	4040 & 4080

9 HOLE 90° TRANSITION PLATE

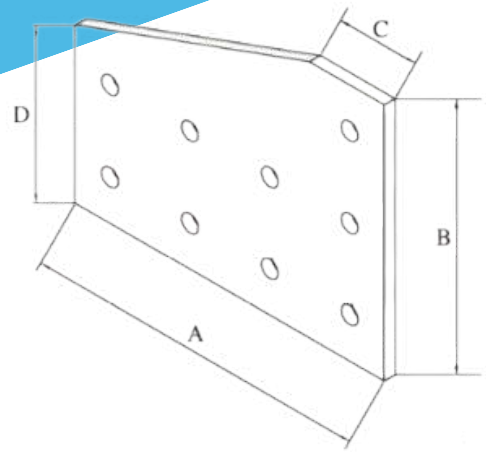

Part No	QTY	Description
5099 & 5343	9	M6 × 12mm BHSCS & Econ T–Nut
5102 & 5344	9	M8 × 16mm BHSCS & Econ T–Nut

Part No	A	B	C	D	kg	Compatibility Code
6205	116	90	28	58	0.093	3060 & 3030
6206	156	120	38	78	0.250	4080 & 4040

12 HOLE 90° JOINING PLATE

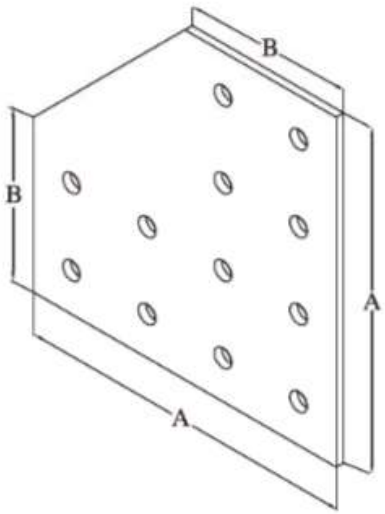

Part No	QTY	Description
5099 & 5343	12	M6 × 12mm BHSCS & Econ T–Nut
5102 & 5344	12	M8 × 16mm BHSCS & Econ T–Nut

Part No	A	B	kg	Compatibility Code
6070	120	60	0.128	3060
6071	160	80	0.35	4080

4 HOLE 90° TRANSITION PLATE

STEEL, GREY POWDER COATING

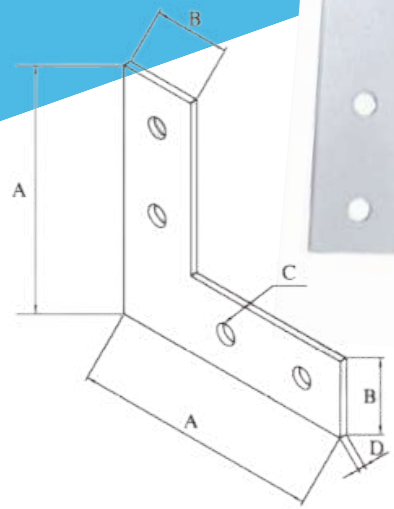

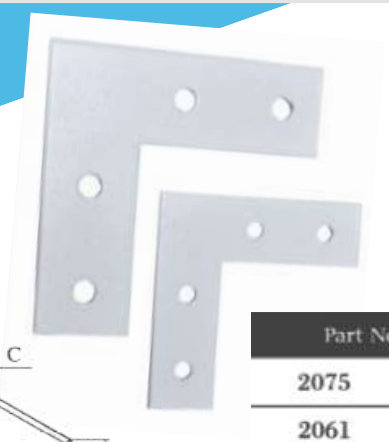

Part No	QTY	Description
5362 & 5271	4	M6 × 6mm BHSCS & Slide–In T–Nuts
5099 & 5343	4	M6 × 12mm BHSCS & Econ T–Nut
5223 & 5344	4	M8 × 12mm BHSCS & Econ T–Nut
5102 & 5336	4	M8 × 16mm BHSCS & Slide–In T–Nuts
5102 & 5336	4	M8 × 16mm BHSCS & Slide–In T–Nuts

Part No	A	B	C	D	kg	Compatibility Code
2075	60	18	ϕ7	2.5	0.032	20B
2061	85	26	ϕ7	2.5	0.070	30B
2062	110	36	ϕ9	3	0.125	40B
2076	126	42	ϕ9	3	0.194	45B
2078	136	46	ϕ9	3	0.232	50B

8 HOLE 90° JOINING PLATE

STEEL, GREY POWDER COATING

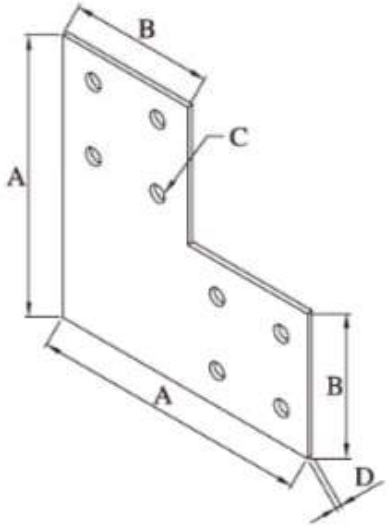

Part No	QTY	Description
5361 & 5271	8	M6 × 8mm BHSCS & Slide–In T–Nuts
5098 & 5343	8	M6 × 10mm BHSCS & Econ T–Nut
5223 & 5344	8	M8 × 12mm BHSCS & Econ T–Nut
5102 & 5336	8	M8 × 16mm BHSCS & Slide–In T–Nuts
5102 & 5336	8	M8 × 16mm BHSCS & Slide–In T–Nuts

Part No	A	B	C	D	kg	Compatibility Code
2079	83	38	ϕ7	2.5	0.088	2040B
2080	115	58	ϕ7	2.5	0.186	3060B
2081	152	76	ϕ9	3	0.386	4080B
2082	170	86	ϕ9	3	0.489	4590B
2083	188	96	ϕ9	3	0.607	50100B

4 HOLE TEE JOINING PLATE

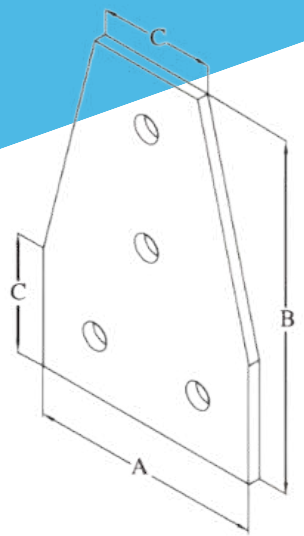

/Part No	QTY	Description
5099 & 5343	4	M6 × 12mm BHSCS & Econ T–Nut
5102 & 5344	4	M8 × 16mm BHSCS & Econ T–Nut

Part No	A	B	C	kg	Compatibility Code
6072	60	90	30	0.038	30
6073	80	120	40	0.118	40

5 HOLE TEE JOINING PLATE

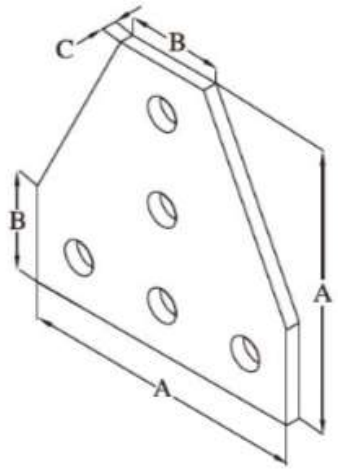

Part No	QTY	Description
5094 & 5339	5	M5 × 8mm BHSCS & Econ T–Nut
5099 & 5343	5	M6 × 12mm BHSCS & Econ T–Nut
5102 & 5344	5	M8 × 16mm BHSCS & Econ T–Nut
5372 & 5336	5	M8 × 14mm BHSCS & Slide–In T–Nuts

Part No	A	B	C	kg	Compatibility Code
6074	60	20	4	0.053	20
6075	90	30	4	0.064	30
6076	120	40	6	0.168	40
6077	135	45	6	0.22	45

6 HOLE TEE JOINING PLATE

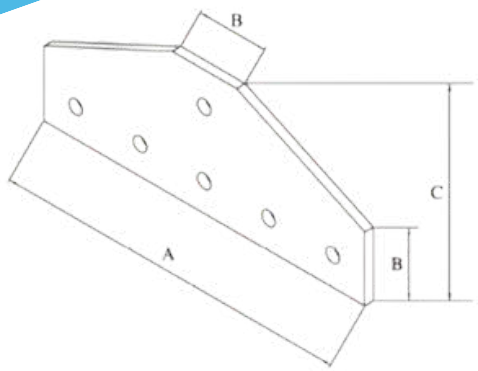

/Part No	QTY	Description
5099 & 5343	6	M6 × 12mm BHSCS & Econ T-Nut
5102 & 5344	6	M8 × 16mm BHSCS & Econ T-Nut

/Part No	A	B	C	kg	Compatibility Code
6188	150	30	58	0.073	30
6189	200	40	78	0.200	40

7 HOLE TEE JOINING PLATE

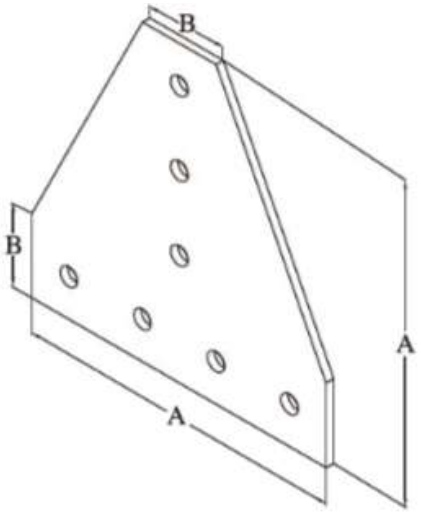

Part No	QTY	Description
5099 & 5343	7	M6 × 12mm BHSCS & Econ T-Nut
5102 & 5344	7	M8 × 16mm BHSCS & Econ T-Nut

Part No	A	B	kg	Compatibility Code
6078	120	30	0.089	30
6079	160	40	0.279	40

8 HOLE TEE JOINING PLATE

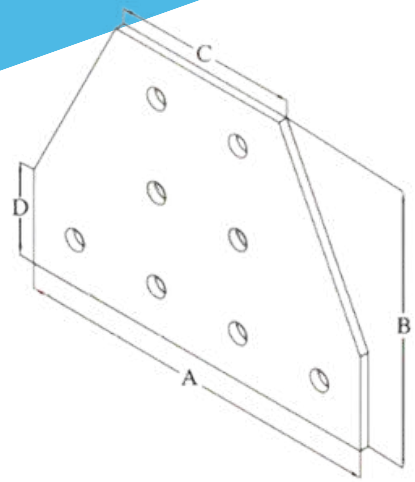

Part No	QTY	Description
5099 & 5343	8	M6 × 12mm BHSCS & Econ T–Nut
5102 & 5344	8	M8 × 16mm BHSCS & Econ T–Nut
5372 & 5336	8	M8 × 14mm BHSCS & Slide–In T–Nuts

/Part No	A	B	C	D	kg	Compatibility Code
6080	120	90	60	30	0.076	3030 & 3060
6081	160	120	80	40	0.238	4040 & 4080
6082	180	135	90	45	0.269	4545 & 4590

11 HOLE TEE JOINING PLATE

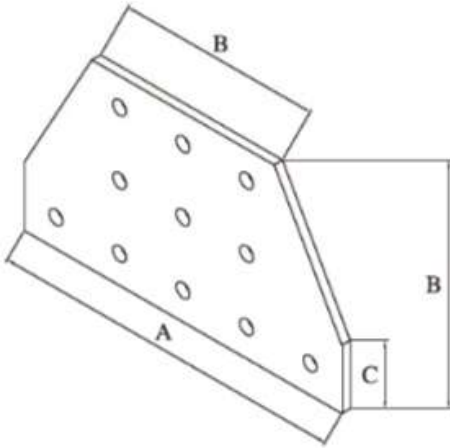

/Part No	QTY	Description
5099 & 5343	11	M6 × 12mm BHSCS & Econ T–Nut
5102 & 5344	11	M8 × 16mm BHSCS & Econ T–Nut

Part No	A	B	C	kg	Compatibility Code
6190	150	86	28	0.120	3030 & 3090
6191	200	116	38	0.310	4040 & 40120

12 HOLE TEE JOINING PLATE

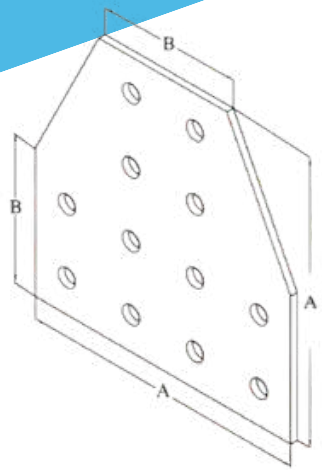

/Part No	QTY	Description
5099 & 5343	12	M6 × 12mm BHSCS & Econ T–Nut
5102 & 5344	12	M8 × 16mm BHSCS & Econ T–Nut

Part No	A	B	kg	Compatibility Code
6083	120	60	0.107	3060
6084	160	80	0.324	4080

16 HOLE TEE JOINING PLATE

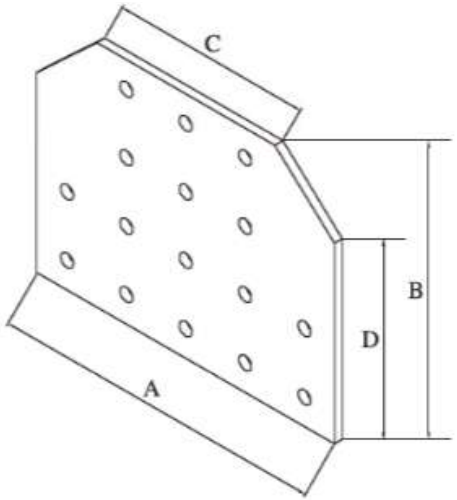

Part No	QTY	Description
5375 & 5343	16	M6 × 14mm BHSCS & Econ T–Nuts
5102 & 5344	16	M8 × 16mm BHSCS & Econ T–Nut

Part No	A	B	C	D	kg	Compatibility Code
6192	150	116	90	88	0.170	3090 & 3090
6193	200	156	120	118	0.470	40120 & 40120

4 HOLE TEE JOINING PLATE

STEEL, GREY POWDER COATING

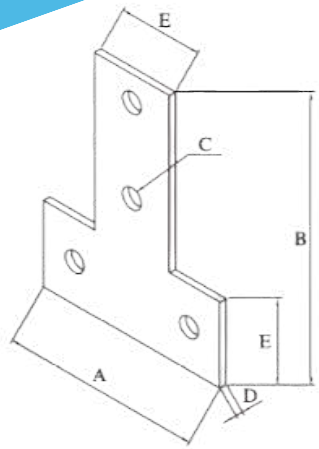

Part No	QTY	Description
5362 & 5271	4	M6 × 6mm BHSCS & Slide–In T–Nuts
5098 & 5343	4	M6 × 10mm BHSCS & Econ T–Nut
5223 & 5344	4	M8 × 12mm BHSCS & Econ T–Nut
5102 & 5336	4	M8 × 16mm BHSCS & Slide–In T–Nuts
5102 & 5336	4	M8 × 16mm BHSCS & Slide–In T–Nuts

Part No	A	B	C	D	E	kg	Compatibility Code
2084	60	60	ϕ7	2.5	18	0.032	20B
2059	85	85	ϕ7	2.5	26	0.070	30B
2060	85	110	ϕ9	3	36	0.107	40B
2085	100	137	ϕ9	3	42	0.180	45B
2086	110	146	ϕ9	3	46	0.216	50B

8 HOLE TEE JOINING PLATE

STEEL, GREY POWDER COATING

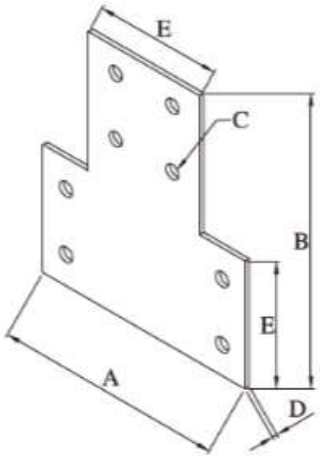

/Part No	QTY	Description
5362 & 5271	8	M6 × 6mm BHSCS & Slide–In T–Nuts
5098 & 5343	8	M6 × 10mm BHSCS & Econ T–Nut
5223 & 5344	8	M8 × 12mm BHSCS & Econ T–Nut
5102 & 5336	8	M8 × 16mm BHSCS & Slide–In T–Nuts
5102 & 5336	8	M8 × 16mm BHSCS & Slide–In T–Nuts

Part No	A	B	C	D	E	kg	Compatibility Code
2087	70	88	ϕ7	2.5	38	0.082	2040B
2088	95	128	ϕ7	2.5	58	0.179	3060B
2089	142	161	ϕ9	3	76	0.396	4080B
2090	150	181	ϕ9	3	86	0.469	4590B
2091	160	196	ϕ9	3	96	0.572	50100B

7 HOLE CROSS JOINING PLATE

Part No	QTY	Description
5094 & 5339	7	M5 × 8mm BHSCS & Econ T–Nut
5099 & 5343	7	M6 × 12mm BHSCS & Econ T–Nut
5102 & 5344	7	M8 × 16mm BHSCS & Econ T–Nut
5372 & 5336	7	M8 × 14mm BHSCS & Slide–In T–Nuts

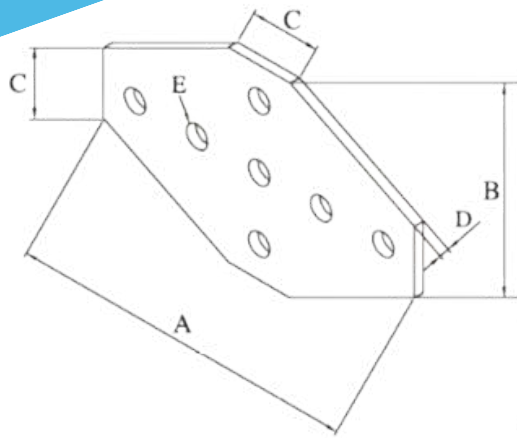

Part No	A	B	C	D	E	kg	Compatibility Code
6085	100	60	20	4	5.3	0.089	20
6086	150	90	30	4	6.3	0.102	30
6087	200	120	40	6	8.3	0.265	40
6088	225	135	45	6	8.3	0.298	45

12 HOLE CROSS JOINING PLATE

/Part No	QTY	Description
5099 & 5343	12	M6 × 12mm BHSCS & Econ T–Nut
5102 & 5344	12	M8 × 16mm BHSCS & Econ T–Nut

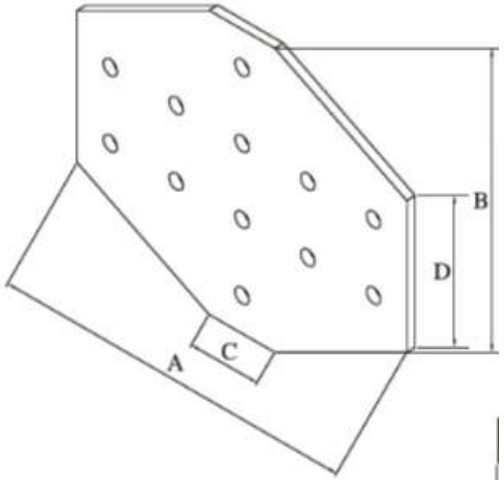

Part No	A	B	C	D	kg	Compatibility Code
6194	150	120	30	60	0.150	3030 & 3060
6195	200	160	40	80	0.410	4040 & 4080

16 HOLE CROSS JOINING PLATE

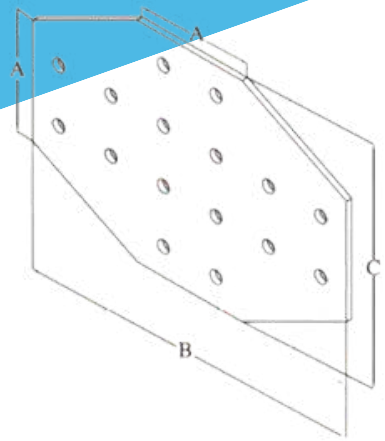

Part No	QTY	Description
5099 & 5343	16	M6 × 12mm BHSCS & Econ T–Nut
5102 & 5344	16	M8 × 16mm BHSCS & Econ T–Nut

Part No	A	B	C	kg	Compatibility Code
6089	60	180	120	0.168	3060
6090	80	240	160	0.469	4080

6 HOLE CROSS JOINING PLATE

STEEL, GREY POWDER COATING

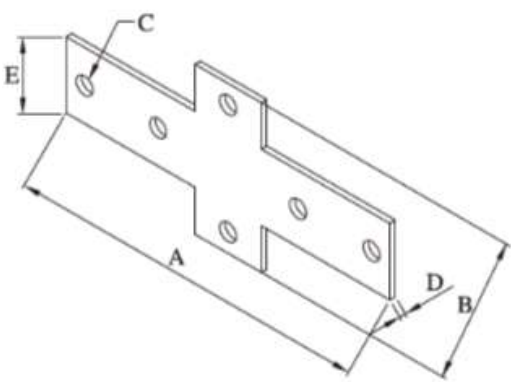

Part No	QTY	Description
5362 & 5271	6	M6 × 6mm BHSCS & Slide–In T–Nuts
5099 & 5343	6	M6 × 12mm BHSCS & Econ T–Nut
5223 & 5344	6	M8 × 12mm BHSCS & Econ T–Nut
5102 & 5336	6	M8 × 16mm BHSCS & Slide–In T–Nuts
5102 & 5336	6	M8 × 16mm BHSCS & Slide–In T–Nuts

Part No	A	B	C	D	E	kg	Compatibility Code
2092	107	57	ϕ7	2.5	18	0.046	20&20
2093	139	64	ϕ7	2.5	28	0.090	30&30
2094	177	81	ϕ9	3	36	0.174	40&40
2095	196	90	ϕ9	3	42	0.225	45&45
2096	210	100	ϕ9	3	46	0.273	50&50

8 HOLE CROSS JOINING PLATE

STEEL, GREY POWDER COATING

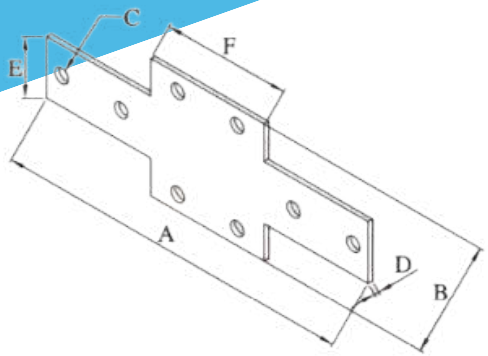

Part No	QTY	Description
5361 & 5271	8	M6×8mm BHSCS & Slide–In T–Nuts
5099 & 5343	8	M6×12mm BHSCS & Econ T–Nut
5223 & 5344	8	M8×12mm BHSCS & Econ T–Nut
5102 & 5336	8	M8×16mm BHSCS & Slide–In T–Nuts
5102 & 5336	8	M8×16mm BHSCS & Slide–In T–Nuts

Part No	A	B	C	D	E	F	kg	Compatibility Code
2102	125	57	ϕ7	2.5	18	36	0.064	20&2040
2103	167	64	ϕ7	2.5	28	56	0.123	30&3060
2104	217	81	ϕ9	3	36	76	0.248	40&4080
2105	240	90	ϕ9	3	42	86	0.318	45&4590
2106	260	100	ϕ9	3	46	96	0.382	50&50100

12 HOLE CROSS JOINING PLATE

STEEL, GREY POWDER COATING

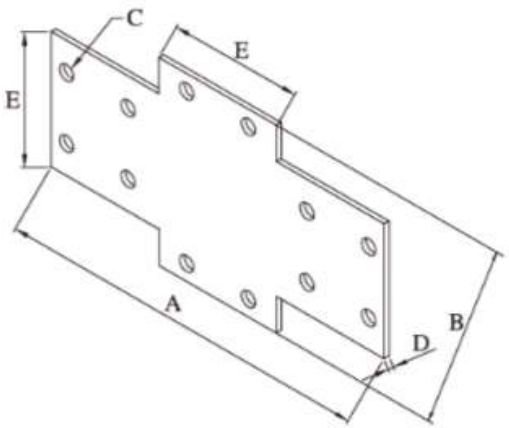

Part No	QTY	Description
5361 & 5271	12	M6×8mm BHSCS & Slide–In T–Nuts
5098 & 5343	12	M6×10mm BHSCS & Econ T–Nut
5223 & 5344	12	M8×12mm BHSCS & Econ T–Nut
5102 & 5336	12	M8×16mm BHSCS & Slide–In T–Nuts
5102 & 5336	12	M8×16mm BHSCS & Slide–In T–Nuts

Part No	A	B	C	D	E	kg	Compatibility Code
2097	125	63	ϕ7	2.5	36	0.096	2040&2040
2098	167	91	ϕ7	2.5	56	0.204	3060&3060
2099	217	118	ϕ9	3	76	0.431	4080&4080
2100	240	133	ϕ9	3	86	0.554	4590&4590
2101	260	143	ϕ9	3	96	0.660	50100&50100

3-WAY CORNER BRACKET

DIE CAST ZINC, NATURAL FINISH/ENDS CAPS NYLON

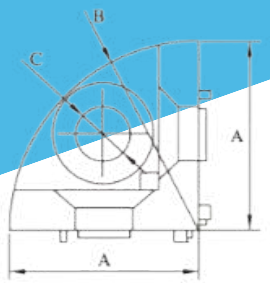

Part No	QTY	Description
5367&4107	3&1	M6×16mm FHSCS
5090&4032	3&1	M8×20mm FHSCS
5091& 4033	3&1	M8×25mm FHSCS
5092& 4034	3&1	M12×25mm FHSCS

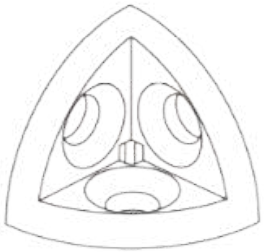

Part No	A	B	C	kg	Compatibility Code
2077	18.5	R20	ϕ6	0.013	20R
2013	28.5	R30	ϕ9	0.046	30R
2014	38.5	R40	ϕ9	0.11	40R
2015	43.5	R45	ϕ12.5	0.126	45R

CONCEALED 3-WAY CORNER CONNECTOR

DIE CAST ZINC, SYLVER POWDER COATING

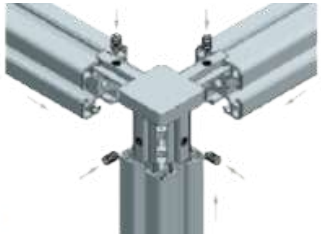

Part No	QTY	Description
5296	4	M4×5mm Thread Insert
5079	4	M6×8mm Thread Insert
5080	4	M6×10mm Thread Insert

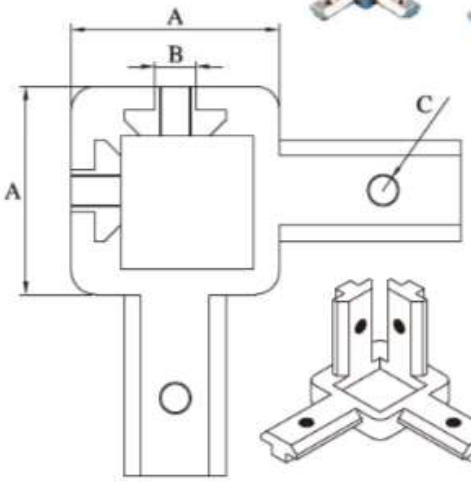

Part No	A	B	C	kg	Compatibility Code
2065	20	6	M4	0.025	20L
2066	30	8	M6	0.073	30L
2067	40	8	M6	0.174	40L

3-WAY CORNER BRACKET

DIE CAST ZINC, NATURAL FINISH/ENDS CAPS NYLON

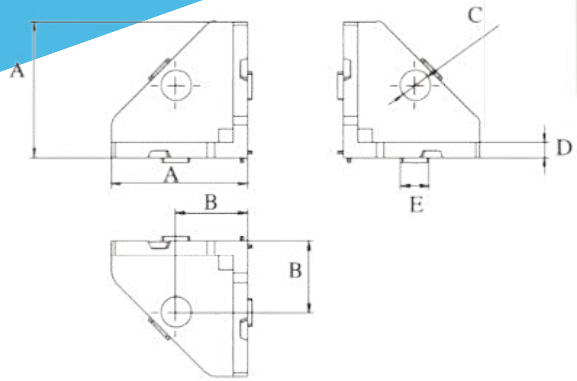

/Part No	QTY	Description
5091& 4033	3&1	M8×25mm FHSCS

Part No	A	B	C	D	E	kg	Compatibility Code
2146	38	20	ϕ8.5	4	7.8	0.06	40C

2-WAY CORNER CONNECTOR

DIE CAST ALUMINIUM, SYLVER POWDER COATING

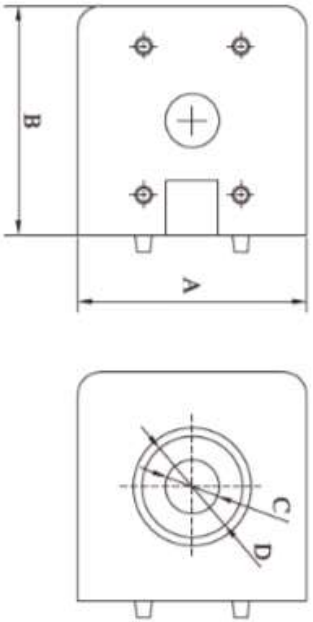

Part No	QTY	Description
5156	2	M6×20 FHSCS
5090	2	M8×20 FHSCS
5091	2	M8×25 FHSCS
5093	2	M12×30 FHSCS

Part No	A	B	C	D	kg	Compatibility Code
2150	25	25	6.6	12.8	0.029	25A
2068	30	30	9.5	17.5	0.039	30A
2070	40	40	9.5	17.5	0.126	40A
2072	45	45	12.5	17.5	0.165	45A

3-WAY CORNER CONNECTOR

DIE CAST ALUMINIUM, SYLVER POWDER COATING

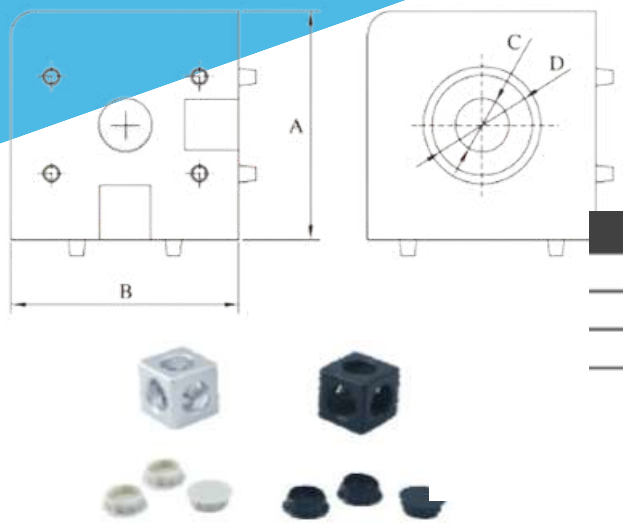

Part No	QTY	Description
5156	3	M6×20 FHSCS
5090	3	M8 × 20 FHSCS
5091	3	M8 × 25 FHSCS
5093	3	M12 × 30 FHSCS

Part No	A	B	C	D	kg	Compatibility Code
2151	25	25	6.6	12.8	0.024	25B
2069	30	30	9.5	17.5	0.035	30B
2071	40	40	9.5	17.5	0.114	40B
2073	45	45	12.5	17.5	0.143	45B

90° 2 HOLE CORNER BRACKET

DIE CAST ALUMINIUM, NATURAL FINISH

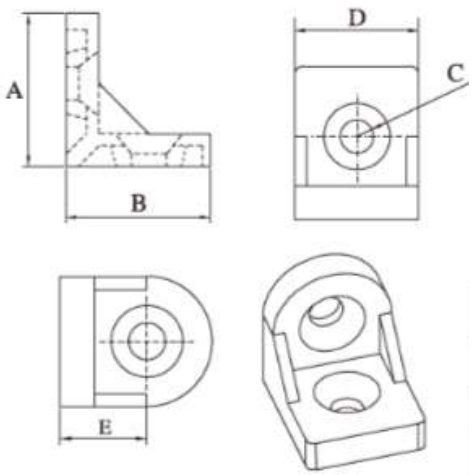

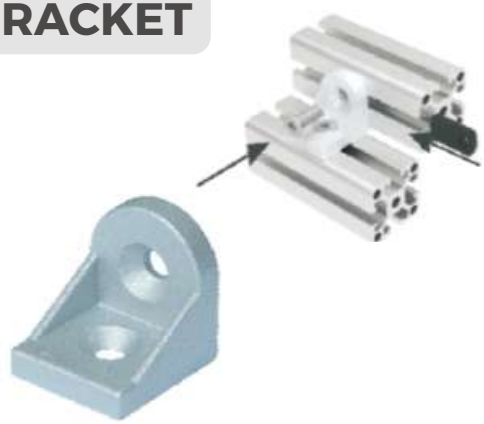

Part No	QTY	Description
5088 & 5343	2	M6 × 16mm FHSCS & Econ T–Nut
5090 & 5344	2	M8 × 20mm FHSCS & Econ T–Nut
5090 & 5336	2	M8 × 20mm FHSCS & Econ T–Nut

Part No	A	B	C	D	E	kg	Compatibility Code
2046	30	30	ϕ6.5	30	15	0.025	30A
2016	37	35	ϕ8.5	30	20	0.028	40A
2017	43	43	ϕ8.5	38	22.5	0.046	45A

2 HOLE SLOTTED INSIDE CORNER BRACKET

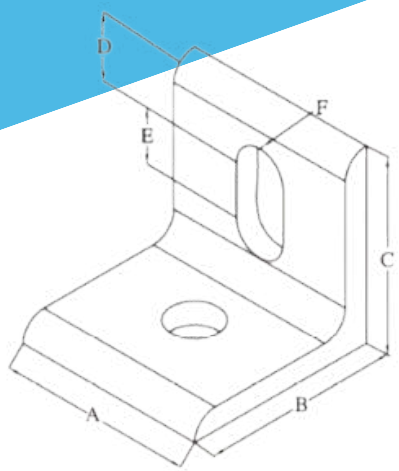

Part No	QTY	Description
5098 & 5341	2	M6 × 10mm BHSCS & Econ T–Nut
5099 & 5343	2	M6 × 12mm BHSCS & Econ T–Nut
5102 & 5344	2	M8 × 16mm BHSCS & Econ T–Nut

Part No	A	B	C	D	E	F	kg	Compatibility Code
6174	22	25	25	8.5	4	ϕ6.3	0.015	25
6004	26	30	30	8.5	5	ϕ6.3	0.017	30
6005	36	40	40	12	12.2	ϕ8.3	0.048	40

3 HOLE SLOTTED INSIDE CORNER BRACKET

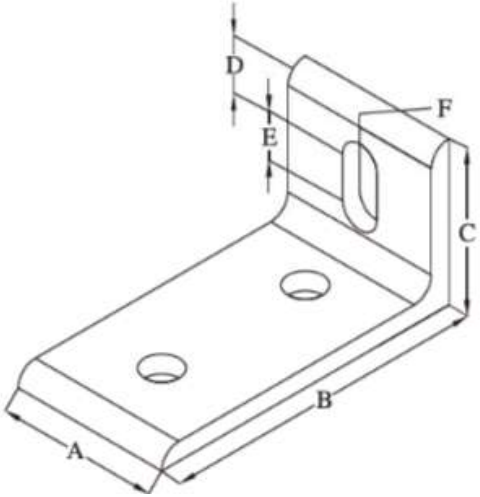

Part No	QTY	Description
5098 & 5341	3	M6 × 10mm BHSCS & Econ T–Nut
5099 & 5343	3	M6 × 12mm BHSCS & Econ T–Nut
5102 & 5344	3	M8 × 16mm BHSCS & Econ T–Nut

Part No	A	B	C	D	E	F	kg	Compatibility Code
6176	22	50	25	8.5	4	ϕ6.3	0.018	25
6010	26	60	30	11	5	ϕ6.3	0.025	30
6011	36	80	40	12	12.2	ϕ8.3	0.072	40

4 HOLE SLOTTED INSIDE CORNER BRACKET

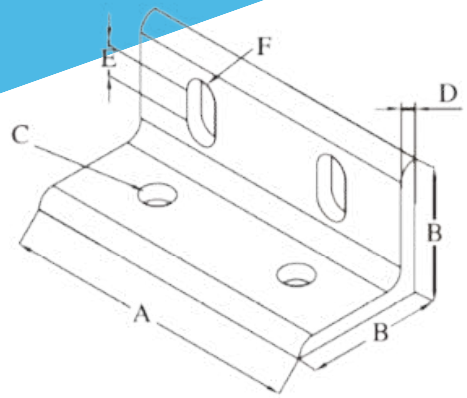

Part No	QTY	Description
5098 & 5341	4	M6 × 10mm BHSCS & Econ T–Nut
5099 & 5343	4	M6 × 12mm BHSCS & Econ T–Nut
5102 & 5344	4	M8 × 16mm BHSCS & Econ T–Nut

Part No	A	B	C	D	E	kg	Compatibility Code
6203	47	25	ϕ6.3	4	4	0.030	25
6016	56	30	ϕ6.3	4	5	0.038	30
6017	76	40	ϕ8.3	6	12.2	0.100	40

6 HOLE SLOTTED INSIDE CORNER BRACKET

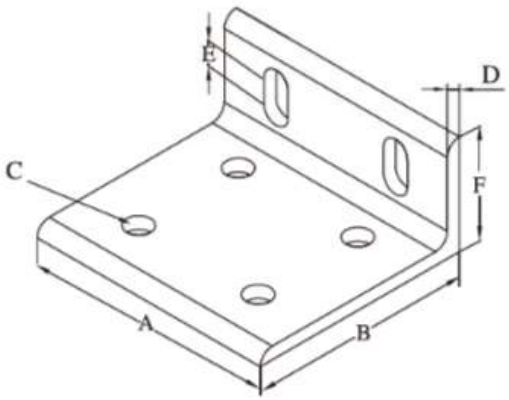

Part No	QTY	Description
5099 & 5343	6	M6 × 12mm BHSCS & Econ T–Nut
5102 & 5344	6	M8 × 16mm BHSCS & Econ T–Nut

Part No	A	B	C	D	E	F	kg	Compatibility Code
6020	56	60	ϕ6.3	4	5	30	0.056	3060 & 3030
6021	76	80	ϕ8.3	6	12.2	40	0.14	4080 & 4040

6 HOLE SLOTTED INSIDE CORNER BRACKET

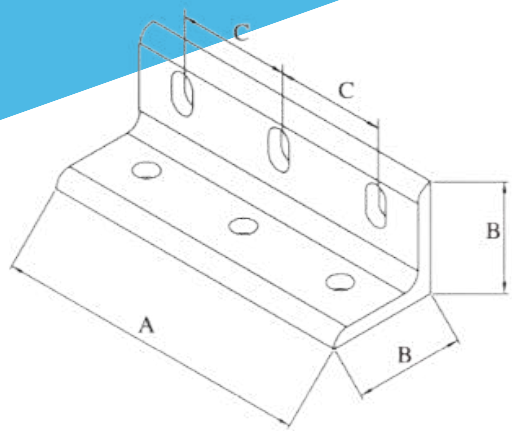

Part No	QTY	Description
5375 & 5343	6	M6 × 14mm BHSCS & Econ T–Nut
5102 & 5344	6	M8 × 16mm BHSCS & Econ T–Nut

/Part No	A	B	C	kg	Compatibility Code
6201	86	30	30	0.046	3090 & 3030
6178	116	40	40	0.130	40120 & 4040

FLAT STEERING CONNECTING PLATE

STEEL, GRAY POWDER COATING

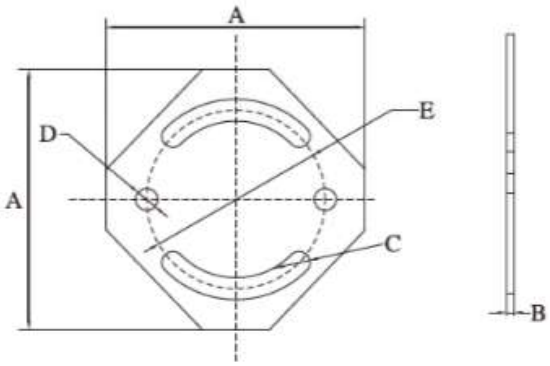

Part No	QTY	Description
5099& 5343	4	M6 × 12mm BHSCS & Econ T–Nut
5223 & 5344	4	M8 × 12mm BHSCS & Econ T–Nut

Part No	A	B	C	D	E	kg	Compatibility Code
2047	86	3	ϕ6.3	ϕ6.3	ϕ60	0.088	30A
2048	96	3	ϕ8.1	ϕ8.1	ϕ66	0.11	40A

STEERING CONNECTING PLATE

STEEL, GRAY POWDER COATING

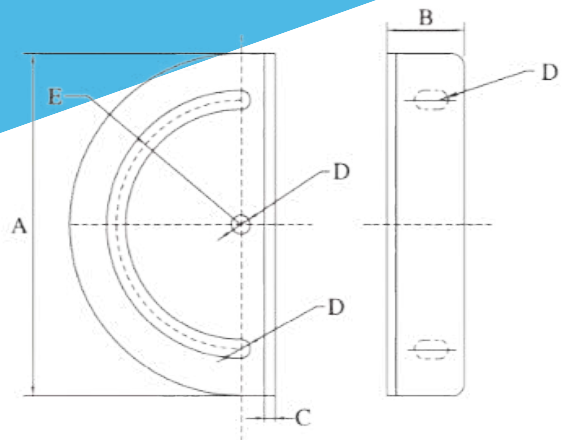

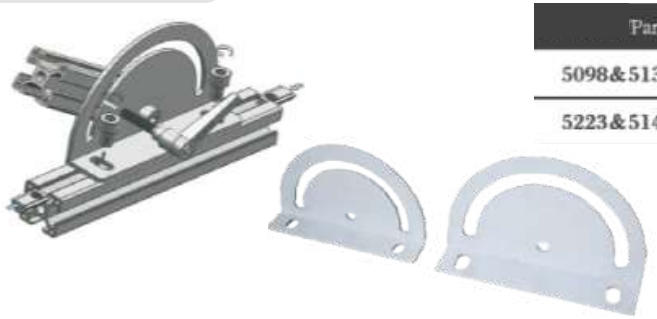

Part No	QTY	Description
5098&5138	4	M6 × 10mm BHSCS & Econ T–Nut
5223&5142	4	M8 × 12mm BHSCS & Econ T–Nut

Part No	A	B	C	D	E	kg	Compatibility Code
2049	110	25	3	ϕ6.1	ϕ80	0.14	30A
2050	130	31	3	ϕ8.1	ϕ100	0.204	40A

90° PIVOT BRACKET

-PERMANENTLY LUBRICATED BRONZE BUSHINGS ACT AS HIGH-STRENGTH PIVOT POINTS. RIGHT & LEFT HAND VERSIONS ARE AVAILABLE, PROVIDING A FULL 90° OF AXIAL MOTION.

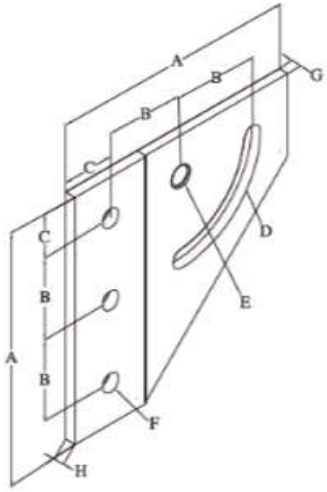

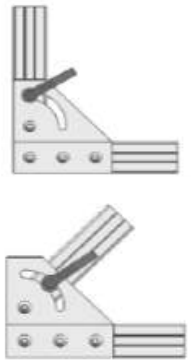

L R

Part No	QTY	Description
5099 & 5343	4 & 5	M6 × 12mm BHSCS & Economy T–Nut
5102 & 5344	4 & 5	M8 × 16mm BHSCS & Economy T–Nut

Part No	A	B	C	D	E	F	G	H	kg	Compatibility Code
6133	90	30	15	ϕ6.3	ϕ8	ϕ6.3	3.36	4	0.048	30 Left
6134	90	30	15	ϕ6.3	ϕ8	ϕ6.3	3.36	4	0.048	30 Right
6135	120	40	20	ϕ8.3	ϕ10	ϕ8.3	5.36	6	0.155	40 Left
6136	120	40	20	ϕ8.3	ϕ10	ϕ8.3	5.36	6	0.155	40 Right

90° PIVOT BRACKET ASSEMBLIES

Assembly Part No.	30-6133 Left Hand 30 Series	30-6134 Right Hand 30 Series	40-6135 Left Hand 40 Series	40-6136 Right Hand 40 Series	30-3100 30 Series	40-4100 40 Series	30 Series	30 Series	40 Series	40 Series
30-6641	1	1			2		1			
30-6642	1	1			2			1		
30-6643	1				1		1			
30-6644		1			1		1			
40-6648			1	1		2			1	
40-6649			1	1		2				1
40-6650			1			1			1	
40-6651				1		1			1	

180° PIVOT BRACKET ASSEMBLIES

-PERMANENTLY LUBRICATED BRONZE BUSHINGS ACT AS HIGH-STRENGTH PIVOT POINTS. RIGHT & LEFT HAND VERSIONS ARE AVAILABLE, PROVIDING A FULL 90° OF AXIAL MOTION.

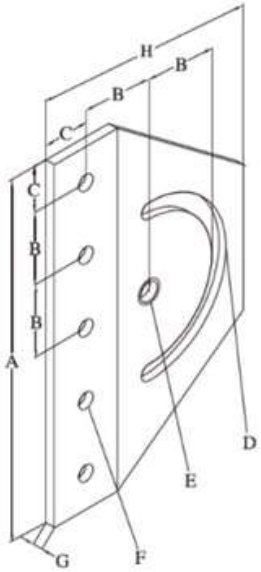

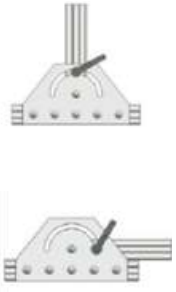

Part No	QTY	Descripti on
5099 & 5343	6 & 7	M6 × 12mm BHSCS & Economy T–Nut
5102 & 5344	6 & 7	M8 × 16mm BHSCS & Economy T–Nut

Part No	A	B	C	D	E	F	G	H	kg	Compatibility Code
6137	150	30	15	ϕ6.3	ϕ8	ϕ6.3	4	90	0.069	30
6138	200	40	20	ϕ8.3	ϕ10	ϕ8.3	6	120	0.245	40

180° PIVOT BRACKET ASSEMBLIES

Assembly Part No.	30-6137 30 Series	40-6138 40 Series	30-3100 30 Series	40-4100 40 Series	30-6105 30 Series	30-6109 30 Series	40-6106 40 Series	40-6110 40 Series
30-6651	1		1		1			
30-6652	2		2		1			
30-6653	2		2			1		
40-6656		1		1			1	
40-6657		2		2			1	
40-6658		2		2				1

120mm/160mm PIVOT ARM

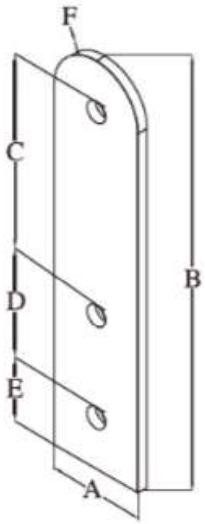

Part No	QTY	Description
5099 & 5343	6	M6 × 12mm BHSCS & Econ T-Nut
5102 & 5344	6	M8 × 16mm BHSCS & Econ T-Nut

Part No	A	B	C	D	E	F	kg	Compatibility Code
6098	28	120	60	30	15	15	0.041	30
6099	38	160	80	40	20	19.9	0.095	40

CONTAMOS CON SERVICIO INTERNACIONAL

Devol
C&O

www.devol.mx

VENTAS: OMAR GARCÍA M.
Cel: 222 350 50 54 ventas@devol.mx
Av. Independencia 1811 San Pedro Cholula, Puebla.

3 HOLE PIVOT PLATE

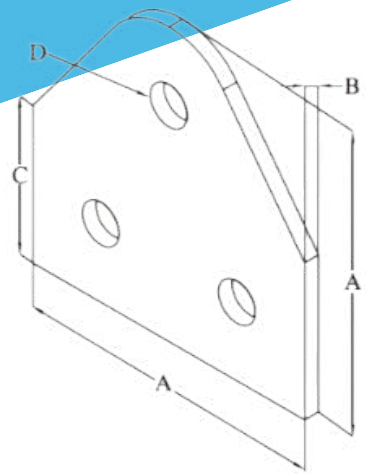

Part No	QTY	Description
5102 & 5344	6 & 4	M8 × 16mm BHSCS & Econ T–Nut

Part No	A	B	C	D	kg	Compatibility Code
6100	80	6	40	ϕ8.3	0.077	4080 & 4040

3 HOLE PIVOT PLATE

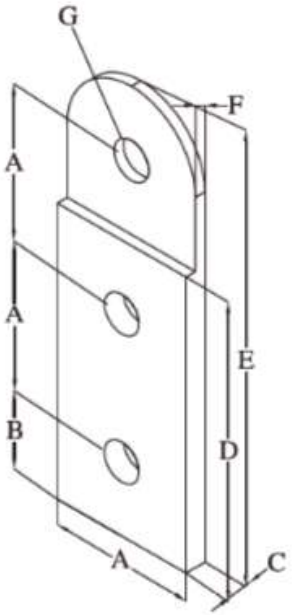

/Part No	QTY	Description
5105 & 5344	8 & 8	M8 × 25mm BHSCS & Econ T–Nut
5234	1	M8 × 65mm SHCS

Part No	A	B	C	D	E	F	G	kg	Compatibility Code
6101	40	20	12	80	120	6	ϕ8.3	0.118	40

3 HOLE PIVOT PLATE

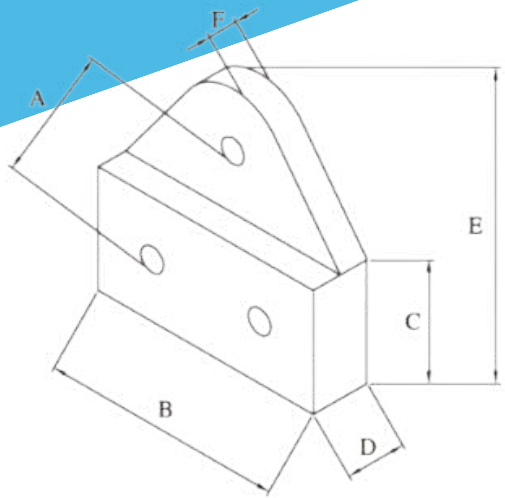

/Part No	QTY	Description
5101&5343	8	M6 × 20mm BHSCS & Econ T–Nuts
5248&5076	1	M6 × 60mm SHCS & Faned Nuts

Part No	A	B	C	D	E	F	kg	Compatibility Code
6196	30	60	30	12	60	6	0.091	3060

5 HOLE PIVOT PLATE

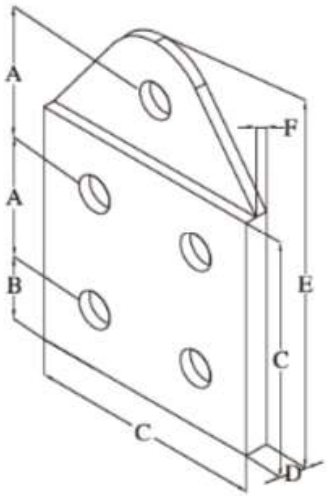

/Part No	QTY	Description
5104&5344	16	M8 × 20mm BHSCS & Econ T–Nuts
5261&5077	1	M8 × 70mm SHCS & Faned Nuts

/Part No	A	B	C	D	E	F	kg	Compatibility Code
6102	40	20	80	12	120	6	0.22	4080

90mm/120mm PIVOT ARM

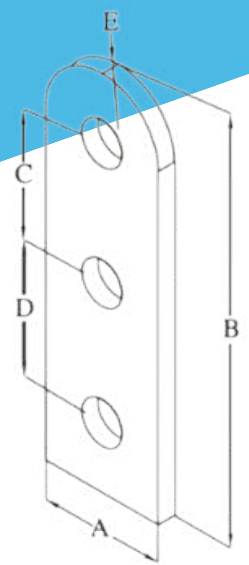

Part No	QTY	Description
5098 & 5343	4 & 2	M6 × 10mm BHSCS & Econ T–Nut
5102 & 5142	4 & 2	M8 × 16mm BHSCS & Econ T–Nut

Part No	A	B	C	D	E	kg	Compatibility Code
6103	28	90	30	30	R15	0.023	30
6104	38	120	40	40	R20	0.068	40

"L" PIVOT ARM

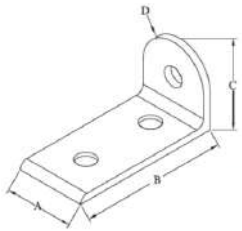

Part No	QTY	Description
5098 & 5343	2	M6 × 10mm BHSCS & Econ T–Nut
5102 & 5344	2	M8 × 16mm BHSCS & Econ T–Nut

Part No	A	B	C	D	kg	Compatibility Code
6111	28	60	30	15	0.02	30
6112	38	80	40	20	0.066	40

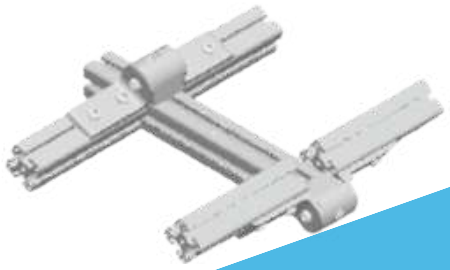

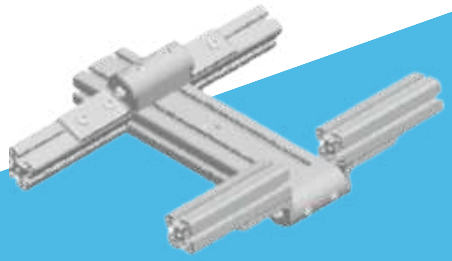

STARNDARD PIVOT NUB ASSEMBLIES -30 SERIES

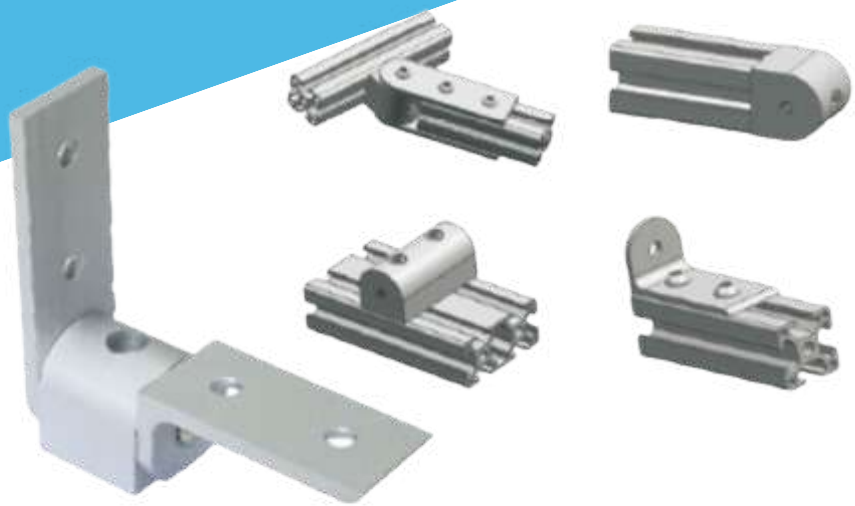

Assembly Part No.	30-6105 0° Nub Page 632	30-6107 90° Nub Page 632	30-6109 Univergal Nub Page 633	30-6103 90mm/120mm Arm Page 629	30-6111 "L" Arm Page 633
30-6601 0.085kg	1			2	
30-6602 0.085kg		1		2	
30-6603 0.085kg			1	2	
30-6604 0.085kg	1				2
30-6605 0.133kg			1		2
30-6606 0.085kg		1			2

STARNDARD PIVOT NUB ASSEMBLIES -40 SERIES

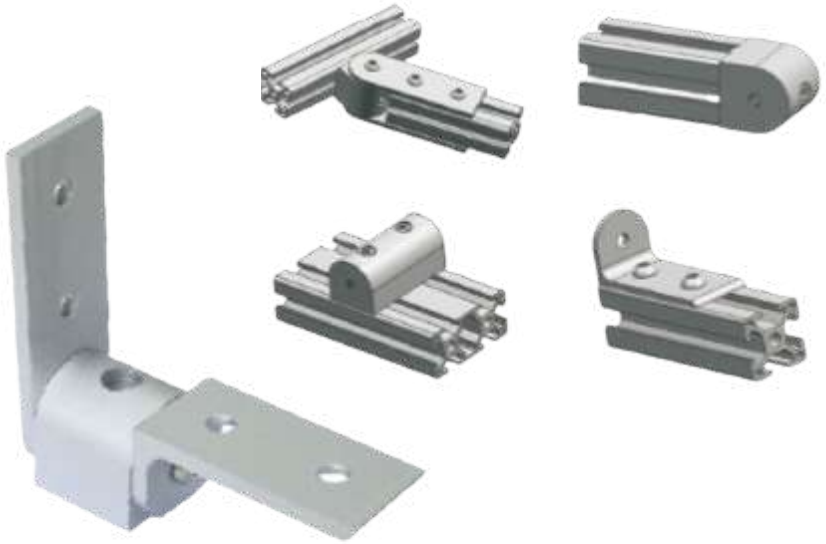

Assembly Part No.	40-6106 0° Nub Page 632	40-6108 90° Nub Page 632	40-6110 Univergal Nub Page 633	40-6104 90mm/120mm Arm Page 629	40-6112 "L" Arm Page 633
40-6607 0.085kg	1			2	
40-6608 0.085kg		1		2	
40-6609 0.085kg			1	2	
40-6610 0.085kg	1				2
40-6611 0.133kg			1		2
40-6640 0.085kg		1			2

0° PIVOT NUB

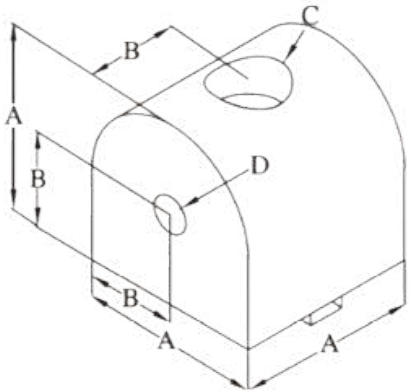

Part No	QTY	Description
5234 & 5135	1	M6 × 30mm SHCS & Economy T–Nut
5112 & 5142	1	M8 × 40mm SHCS & Economy T–Nut

Part No	A	B	C	D	kg	Compatibility Code
6105	30	15	M6 SHCS	M6	0.064	30
6106	40	20	M8 SHCS	M8	0.146	40

90° PIVOT NUB

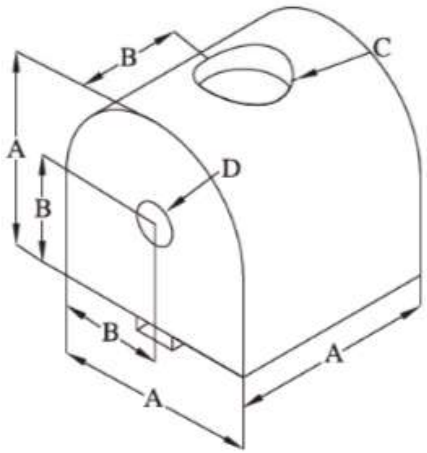

Part No	QTY	Description
5234 & 5135	1	M6 × 30mm SHCS & Economy T–Nut
5112 & 5142	1	M8 × 40mm SHCS & Economy T–Nut

Part No	A	B	C	D	kg	Compatibility Code
6107	30	15	M6 SHCS	M6	0.064	30
6108	40	20	M8 SHCS	M8	0.148	40

UNIVERSAL PIVOT NUB

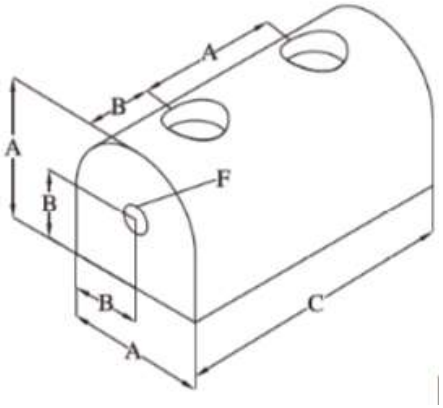

Part No	QTY	Description
5234 & 5135	2	M6 × 30mm SHCS & Economy T–Nut
5112 & 5142	2	M8 × 40mm SHCS & Economy T–Nut

Part No	A	B	C	D	E	kg	Compatibility Code
6109	30	15	60	M6 SHCS	M6	0.064	3060
6110	40	20	80	M8 SHCS	M8	0.148	4080

0° RIGHT ANGLE LIVING NUB

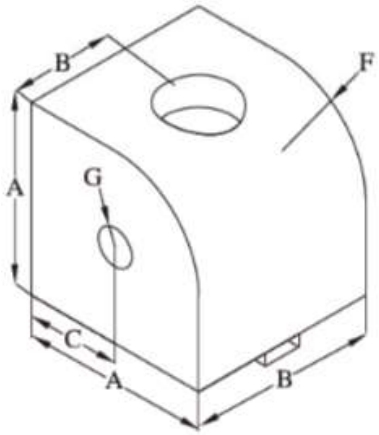

Part No	QTY	Description
5234 & 5135	1	M6 × 30mm SHCS & Economy T–Nut
5112 & 5142	1	M8 × 40mm SHCS & Economy T–Nut

Part No	A	B	C	D	E	F	G	kg	Compatibility Code
6123	30	30	15	15	M6 SHCS	15	M6	0.033	30
6124	40	40	20	20	M8 SHCS	20	M8	0.156	40

90° RIGHT ANGLE LIVING NUB

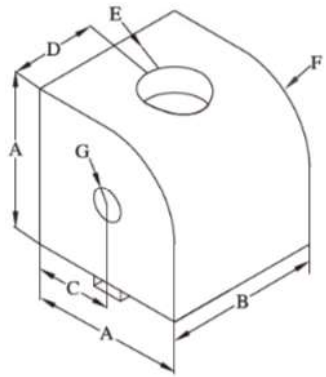

Part No	QTY	Description
5234 & 5135	1	M6 × 30mm SHCS & Economy T–Nut
5112 & 5142	1	M8 × 40mm SHCS & Economy T–Nut

Part No	A	B	C	D	E	F	G	kg	Compatibility Code
6125	30	15	15	15	M6 SHCS	15	M6	0.033	30
6126	40	40	20	20	M8 SHCS	20	M8	0.156	40

UNIVERSAL RIGHT ANGLE LIVING NUB

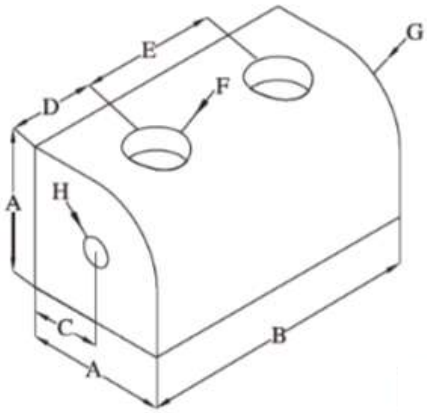

Part No	QTY	Description
5234 & 5135	2	M6 × 30mm SHCS & Economy T–Nut
5112 & 5142	2	M8 × 40mm SHCS & Economy T–Nut

Part No	A	B	C	D	E	F	G	H	kg	Compatibility Code
6127	30	58.7	15	14.35	30	M6 SHCS	15	M6	0.064	3060
6128	40	78.7	20	19.35	40	M8 SHCS	20	M8	0.311	4080

RIGHT ANGLE LIVING HINGE-30 SERIES

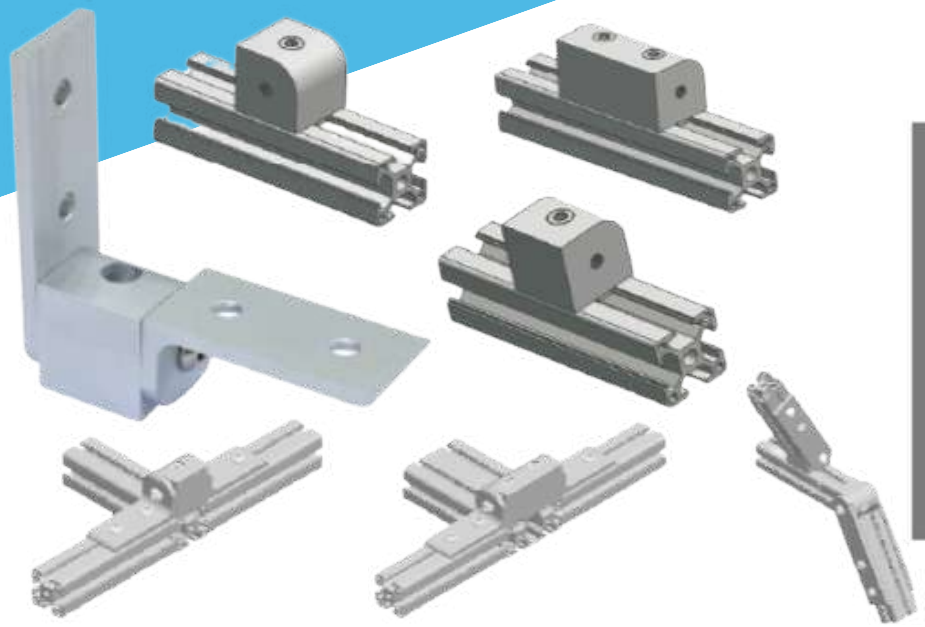

Assembly Part No.	30-6123 0° Nub Page 641	30-6125 90° Nub Page 641	30-6127 Univergal Nub Page 642	30-6103 90mm Arm Page 642	30-6111 "L" Arm Page 643
30-6624 0.107kg	1			2	
30-6625 0.107kg		1		2	
30-6626 0.152kg			1	2	
30-6627 0.104kg	1				2
30-6628 0.104kg		1			2
30-6629 0.147kg			1		2

RIGHT ANGLE LIVING HINGE-40 SERIES

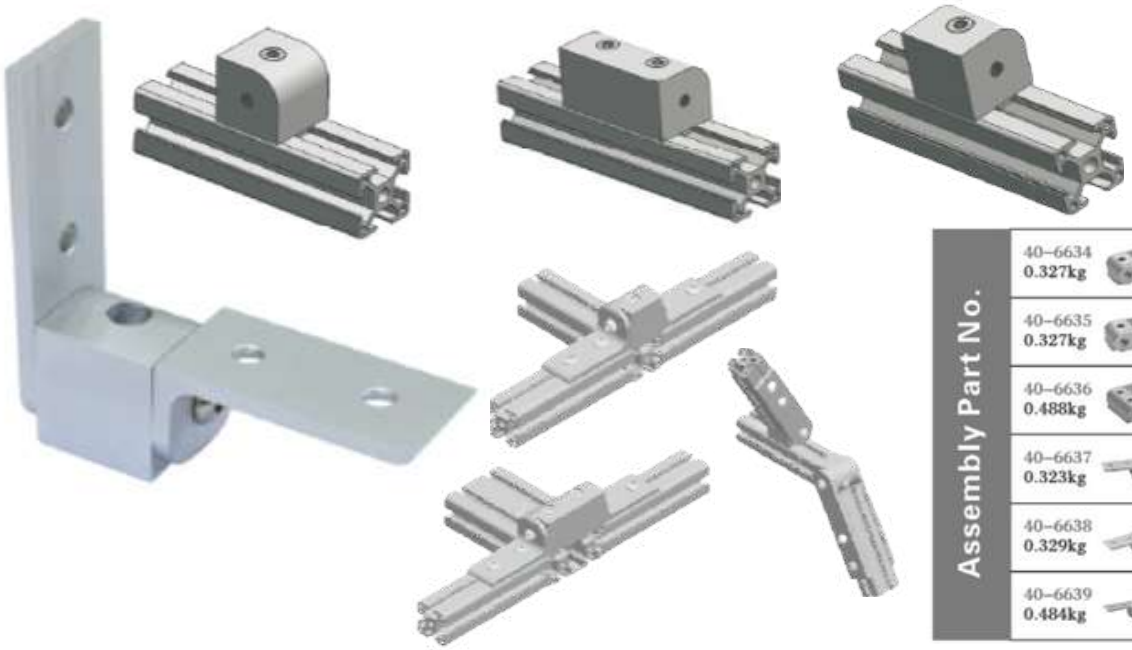

Assembly Part No.	40-6124 0° Nub Page 641	40-6126 90° Nub Page 641	40-6128 Univergal Nub Page 642	40-6104 90mm Arm Page 642	40-6112 "L" Arm Page 643
40-6634 0.327kg	1			2	
40-6635 0.327kg		1		2	
40-6636 0.488kg			1	2	
40-6637 0.323kg	1				2
40-6638 0.329kg		1			2
40-6639 0.484kg			1		2

PIVOT JOINT

DIE-CAST ALUMINIUM, POWDER COAT, ALUMINIUM COLOR

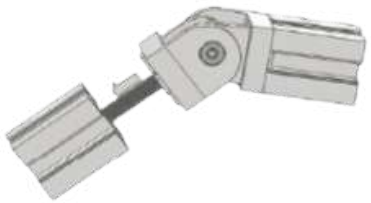

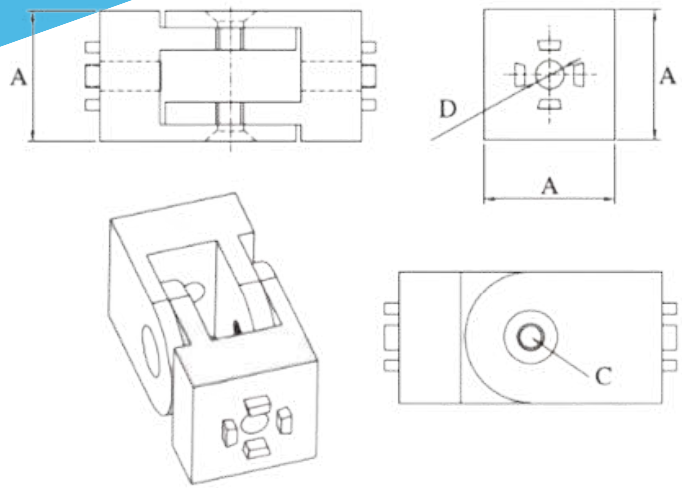

Part No	A	C	D	kg	Compatibility Code
2021	30	M6	7	0.101	30A
2022	40	M8	9	0.266	40A

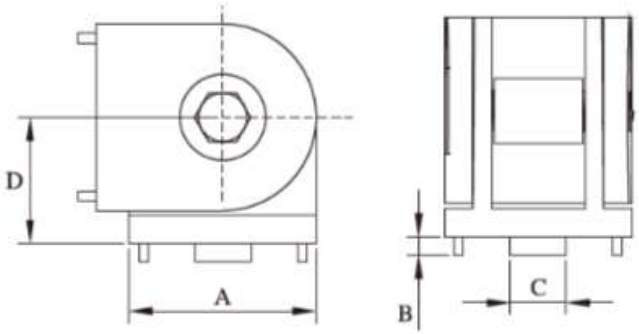

Part No	A	B	C	D	kg	Compatibility Code
2056	20	2	6	13.5	0.04	20B

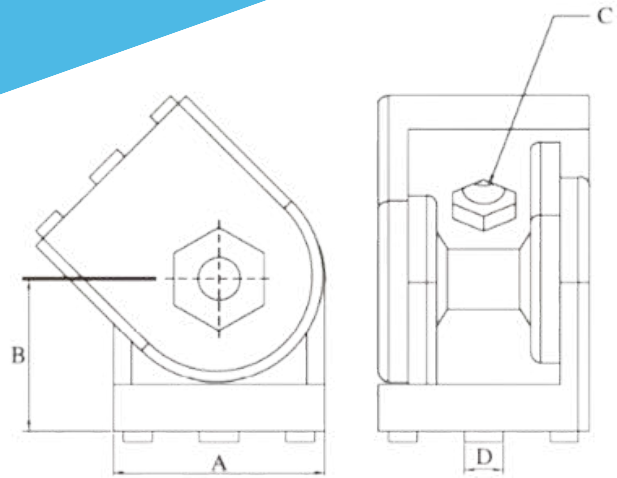

Part No	A	B	C	D	kg	Compatibility Code
2023	30	24	ϕ8.5	6/8	0.178	30B
2024	40	29	ϕ8.3	8/10	0.28	40B
2051	45	33	ϕ12.3	10/8	0.36	45B

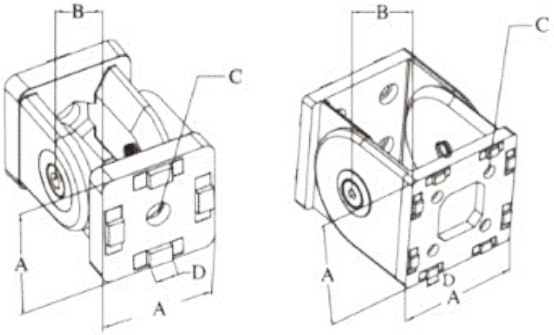

Part No	A	B	C	D	kg	Compatibility Code
2113	20	15	ϕ6.3	6	0.06	20C
2114	25	19.5	ϕ6.3	6	0.12	25C
2115	30	22.5	ϕ8.3	6/8	0.17	30C
2116	40	29.6	ϕ8.3	8/10	0.36	40C
2117	45	30.5	ϕ12.3	10/8	0.42	45C
2118	50	35	ϕ12.3	10/8	0.50	50C
2119	60	40	ϕ8.3	6/8	0.72	60C
2120	80	50	ϕ8.3	8/10	1.71	80C

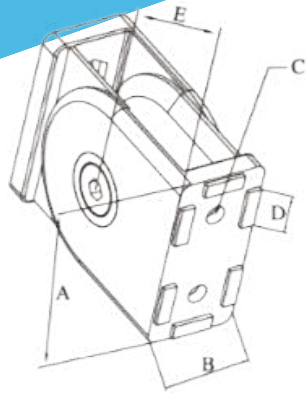

Part No	A	B	C	D	E	kg	Compatibility Code
2121	40	20	ϕ6.3	6	26.5	0.17	2040C
2122	50	25	ϕ6.3	6	35	0.38	2550C
2123	60	30	ϕ8.3	6/8	40	0.55	3060C
2124	80	40	ϕ8.3	8/10	50	1.41	4080C
2125	90	45	ϕ12.3	10/8	50	1.48	4590C
2126	100	50	ϕ12.3	10/8	50	1.71	50100C

INJECTION MOLDING PA66+GF30

ML-1016, EACH GEAR IS 5 DEGREES

ML-1017, EACH GEAR IS 10 DEGREES

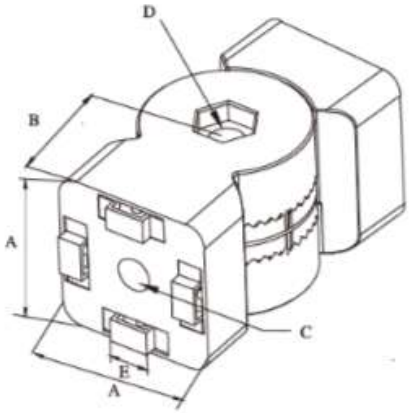

Part No	A	B	C	D	E	kg	Compatibility Code
ML-1016-8	40	37	ϕ8.5	ϕ8.5	8	0.1235	40A(5度)
ML-1016-10	40	37	ϕ8.5	ϕ8.5	10	0.1236	
ML-1017-8	40	37	ϕ8.5	ϕ8.5	8	0.1235	40B(10度)
ML-1017-10	40	37	ϕ8.5	ϕ8.5	10	0.1236	

ANGLE REGULATOR

INJECTION MOLDING PA66+GF30

EACH GEAR IS 5 DEGREES

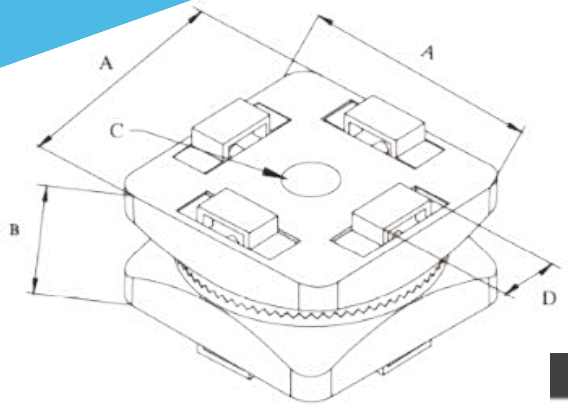

Part No	A	B	C	D	kg	Compatibility Code
ML-1018-8	40	20	ϕ8.5	8	0.031	40-8(5度)
ML-1018-10	40	20	ϕ8.5	10	0.031	40-10(5度)

40X40-8 PIVOT JOINT

INJECTION MOLDING PA66+GF30/BERING

BUILD IN STEEL BEARINGS, FREE TO ROTATE, BUT UNABLE TO LOCK

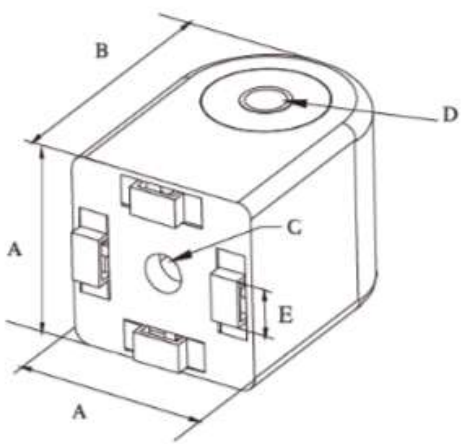

Part No	A	B	C	D	E	kg	Compatibility Code
ML-1021-8	40	56	ϕ8.5	ϕ8	8	0.1187	40-8
ML-1021-10	40	56	ϕ8.5	ϕ8	10	0.1187	40-10

PIVOT JOINT

INJECTION MOLDING PA66+GF30

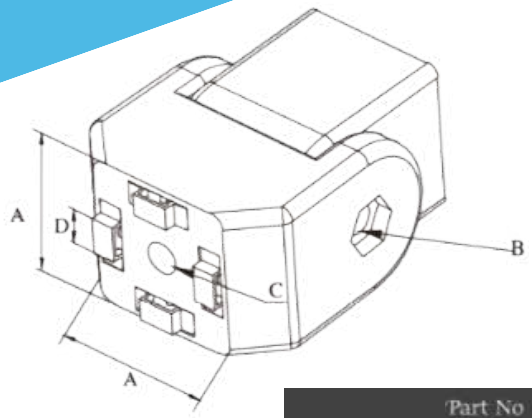

Part No	A	B	C	D	kg	Compatibility Code
ML-1015+1021-8	40	ϕ8.5	ϕ8.3	8	0.206	40-8
ML-1015+1021-10	40	ϕ8.5	ϕ8.3	10	0.206	40-10

BERING PEDESTAL

INJECTION MOLDING PA66+GF30/BERING

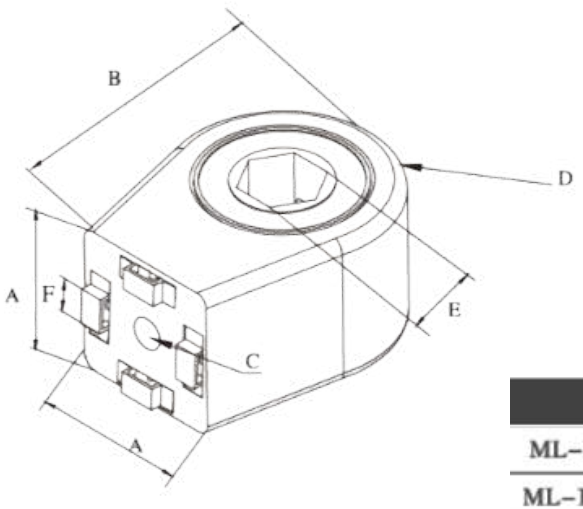

Part No	A	B	C	D	E	F	kg	Compatibility Code
ML-1022-8	40	64.8	ϕ8.5	R29	19.2	8	0.2	40-8
ML-1022-10	40	64.8	ϕ8.5	R29	19.2	10	0.2	40-10

BERING PEDESTAL

INJECTION MOLDING PA66+GF30/BERING

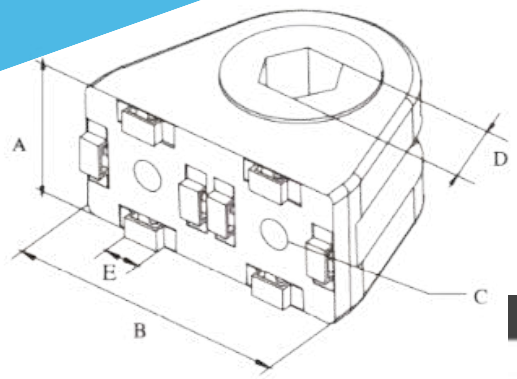

Part No	A	B	C	D	E	kg	Compatibility Code
ML-1023-8	40	80	ϕ8.5	19.2	8	0.2176	40-8
ML-1023-10	40	80	ϕ8.5	19.2	10	0.2176	40-10

4 HOLE 15° ANGLE JOINING PLATE

INJECTION MOLDING PA66+GF30/BERING

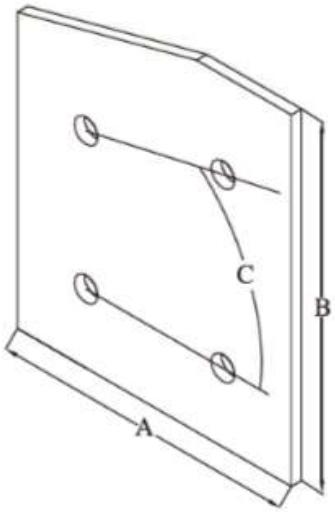

Part No	QTY	Description
5102 & 5344	4	M8 x 16mm BHSCS & Econ T-Nut

Part No	A	B	C	kg	Compatibility Code
6091	80	94	15°	0.107	40

4 HOLE 30° ANGLE JOINING PLATE

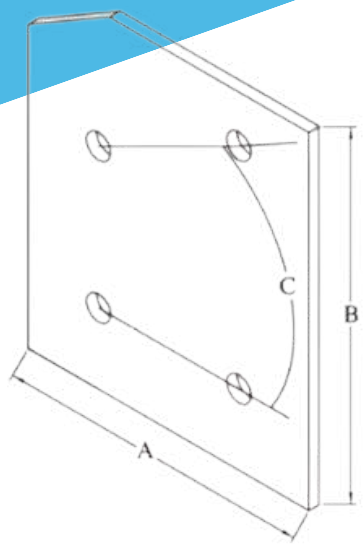

Part No	QTY	Description
5102 & 5344	4	M8 × 16mm BHSCS & Econ T–Nut

Part No	A	B	C	kg	Compatibility Code
6092	80	93.37	30°	0.107	40

6 HOLE 30° ANGLE JOINING PLATE

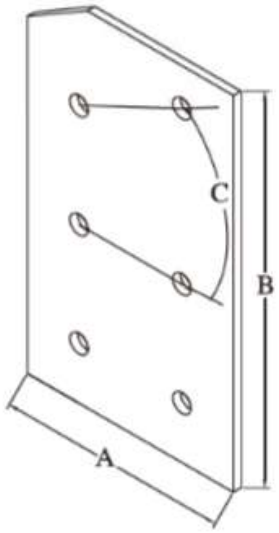

Part No	QTY	Description
5102 & 5344	6	M8 × 16mm BHSCS & Econ T–Nut

Part No	A	B	C	kg	Compatibility Code
6093	80	133.38	30°	0.154	40

4 HOLE 45° ANGLE JOINING PLATE

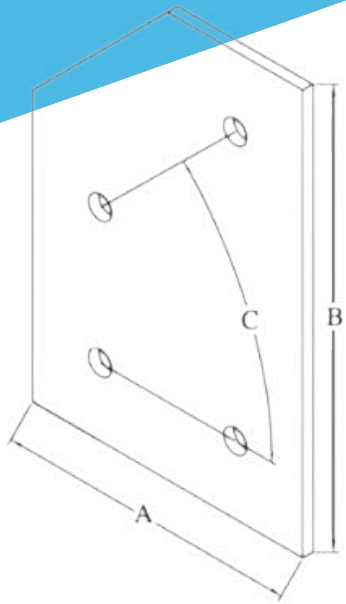

Part No	QTY	Description
5102 & 5344	4	M8 × 16mm BHSCS & Econ T-Nut

Part No	A	B	C	kg	Compatibility Code
6094	80	120	45°	0.125	40

6 HOLE 45° ANGLE JOINING PLATE

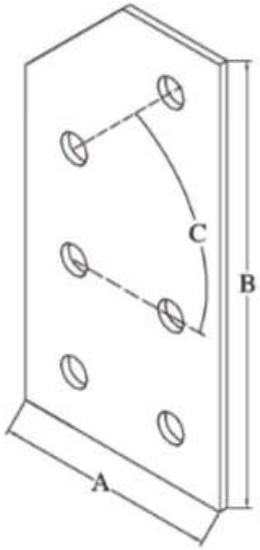

Part No	QTY	Description
5102 & 5344	6	M8 × 16mm BHSCS & Econ T-Nut

Part No	A	B	C	kg	Compatibility Code
6095	80	160	45°	0.173	4080 & 4040

4 HOLE 60° ANGLE JOINING PLATE

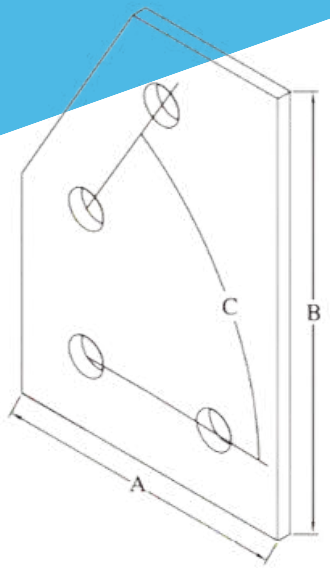

Part No	QTY	Description
5102 & 5344	4	M8 × 16mm BHSCS & Econ T–Nut

Part No	A	B	C	kg	Compatibility Code
6096	80	120	60°	0.13	40

6 HOLE 60° JOINING PLATE

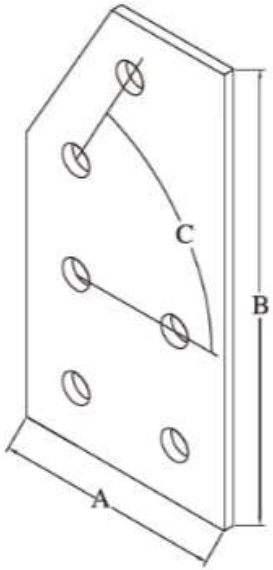

Part No	QTY	Description
5102 & 5344	6	M8 × 16mm BHSCS & Econ T–Nut

Part No	A	B	C	kg	Compatibility Code
6097	80	160	60°	0.177	4080 & 4040

45° SUPPORT CONNECTOR

DIE-CAST ALUMINIUM, POWDER COAT

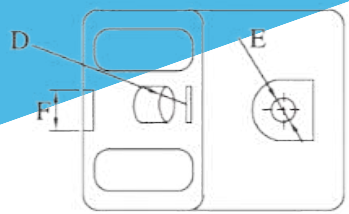

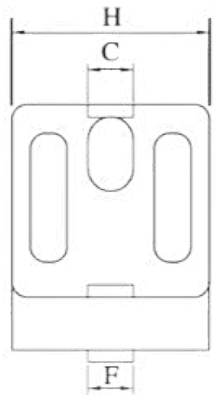

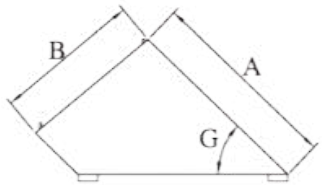

Part No	QTY	Description
5102 & 5344	2&1	M8x16mm BHSCS & Econ T–Nuts

Part No	A	B	C	D	E	F	G	H	kg	Compatibility Code
2025	50	40	7.8	8.5	8.5	7.8	45°	40	0.085	40–8

DIE-CAST ZINC, SILVER POWDER COATING/END CAPS NYLON

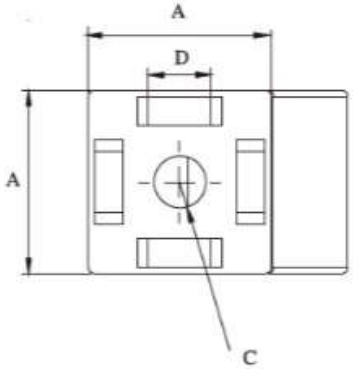

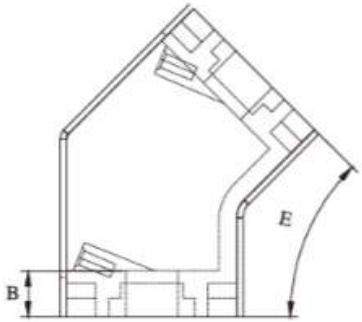

Part No	QTY	Description
5111	2	M8 × 25mm SHCS
5250	2	M8 × 30mm SHCS
5113	2	M12 × 30mm SHCS

Part No	A	B	C	D	E	kg	Compatibility Code
2143	30	8	ϕ 8.5	6 / 8	45°	0.1145	30B
2144	40	10	ϕ 8.5	8 / 10	45°	0.3090	40B
2145	45	12	ϕ 12.5	10 / 8	45°	0.3730	45B

45° SUPPORT CONNECTOR

2 HOLE 45° INSIDE CORNER BRACKET

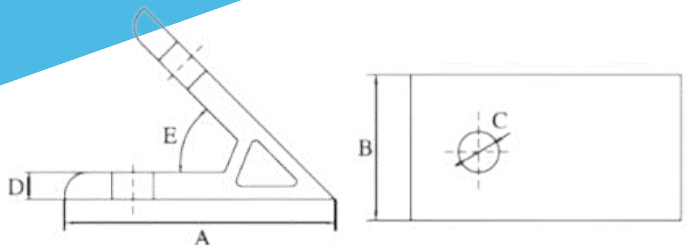

Part No	QTY	Description
5100 & 5343	2	M6 × 16mm BHSCS & Econ T–Nut
5102 & 5344	2	M8 × 16mm BHSCS & Econ T–Nut
5103 & 5336	2	M8 × 18mm BHSCS & Econ T–Nut

Part No	A	B	C	D	E	kg	Compatibility Code
6139	60	22	ϕ6.5	6	45°	0.033	30
6140	60	32	ϕ9	6	45°	0.047	40
6167	60	42	ϕ9	6	45°	0.061	45

4 HOLE 45° INSIDE CORNER BRACKET

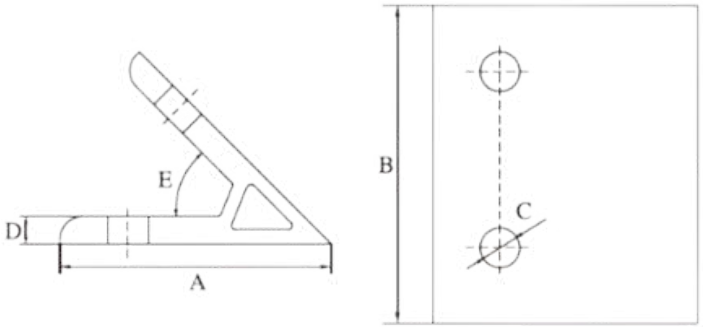

Part No	QTY	Description
5100 & 5343	2	M6 × 16mm BHSCS & Econ T–Nut
5102 & 5344	2	M8 × 16mm BHSCS & Econ T–Nut
5103 & 5336	2	M8 × 18mm BHSCS & Econ T–Nut

Part No	A	B	C	D	E	kg	Compatibility Code
6141	60	52	ϕ6.5	6	45°	0.078	3060
6142	60	72	ϕ9	6	45°	0.107	4080
6168	60	82	ϕ9	6	45°	0.13	4590

135° SUPPORT CONNECTOR

2 HOLE 135° INSIDE CORNER BRACKET

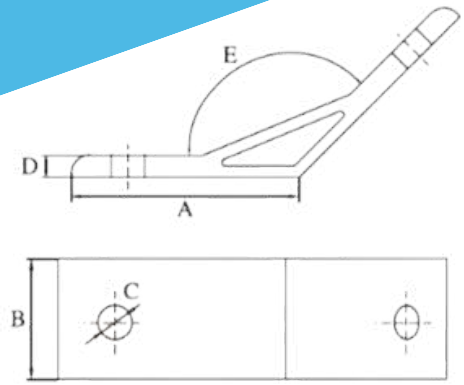

Part No	QTY	Description
5100 & 5343	2	M6 × 16mm BHSCS & Econ T–Nut
5102 & 5344	2	M8 × 16mm BHSCS & Econ T–Nut
5372 & 5336	2	M8 × 18mm BHSCS & Econ T–Nut

Part No	A	B	C	D	E	kg	Compatibility Code
6143	60	22	ϕ6.5	6	135°	0.039	30
6144	60	32	ϕ9	6	135°	0.057	40
6169	60	42	ϕ9	6	135°	0.066	45

4 HOLE 45° INSIDE CORNER BRACKET

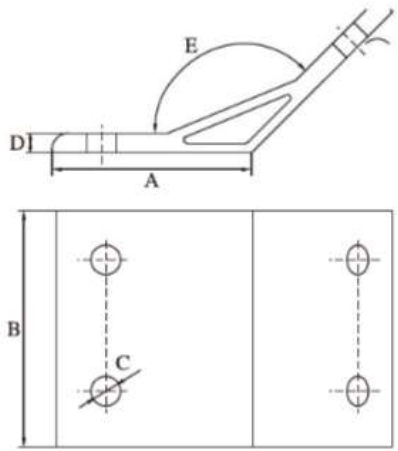

Part No	QTY	Description
5100 & 5343	2	M6 × 16mm BHSCS & Econ T–Nut
5102 & 5344	2	M8 × 16mm BHSCS & Econ T–Nut
5372 & 5336	2	M8 × 18mm BHSCS & Econ T–Nut

Part No	A	B	C	D	E	kg	Compatibility Code
6145	60	52	ϕ6.5	6	135°	0.093	3060
6146	60	72	ϕ9	6	135°	0.128	4080
6170	60	82	ϕ9	6	135°	0.163	4590

45° SUPPORT CONNECTOR 20, 25 & 30 SERIES

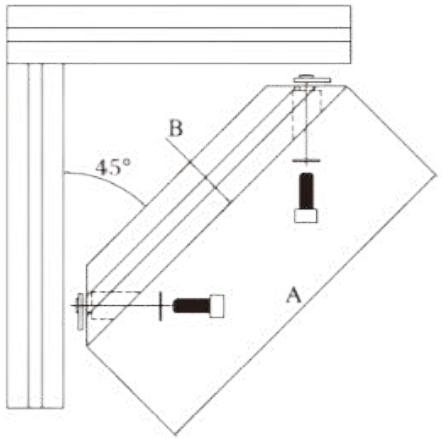

Part No	Profile	Length A	B	Mounting Hardware Included	KG
A-1000	20-2020	160mm	20×20	(2)M5*12 SHCS,Washer and Economy T-Nut	0.076
A-1001		320mm		(2)M5*12 SHCS,Washer and Economy T-Nut	0.16
A-1002		480mm		(2)M5*12 SHCS,Washer and Economy T-Nut	0.23
A-1003	20-2040	160mm	20×40	(4)M5*12 SHCS,Washer and Economy T-Nut	0.14
A-1004		320mm		(4)M5*12 SHCS,Washer and Economy T-Nut	0.27
A-1005		480mm		(4)M5*12 SHCS,Washer and Economy T-Nut	0.40
A-1006	25-2525	160mm	25×25	(2)M6*16 SHCS,Washer and Economy T-Nut	0.13
A-1007		320mm		(2)M6*16 SHCS,Washer and Economy T-Nut	0.25
A-1008		480mm		(2)M6*16 SHCS,Washer and Economy T-Nut	0.37
A-1009	25-2550	160mm	25×50	(4)M6*16 SHCS,Washer and Economy T-Nut	0.22
A-1010		320mm		(4)M6*16 SHCS,Washer and Economy T-Nut	0.43
A-1011		480mm		(4)M6*16 SHCS,Washer and Economy T-Nut	0.61
A-1012	30-3030	160mm	30×30	(2)M8*16 SHCS,Washer and Economy T-Nut	0.18
A-1013		320mm		(2)M8*16 SHCS,Washer and Economy T-Nut	0.36
A-1014		480mm		(2)M8*16 SHCS,Washer and Economy T-Nut	0.54
A-1015		640mm		(2)M8*16 SHCS,Washer and Economy T-Nut	0.71
A-1016	30-3060	160mm	30×60	(4)M8*16 SHCS,Washer and Economy T-Nut	0.27
A-1017		320mm		(4)M8*16 SHCS,Washer and Economy T-Nut	0.54
A-1018		480mm		(4)M8*16 SHCS,Washer and Economy T-Nut	0.80
A-1019		640mm		(4)M8*16 SHCS,Washer and Economy T-Nut	1.10

45° SUPPORT CONNECTOR 40 & 45 SERIES

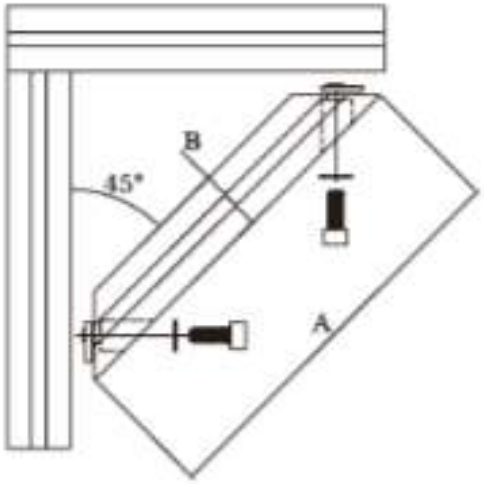

Part No	Profile	Length A	B	Mounting Hardware Included	KG
A-1020	40-4040	160mm	40×40	(2)M8*18 SHCS,Washer and Economy T-Nut	0.32
A-1021		320mm		(2)M8*18 SHCS,Washer and Economy T-Nut	0.63
A-1022		480mm		(2)M8*18 SHCS,Washer and Economy T-Nut	0.95
A-1023		640mm		(2)M8*18 SHCS,Washer and Economy T-Nut	1.26
A-1024	40-4040C	160mm	40×40	(2)M8*18 SHCS,Washer and Economy T-Nut	0.22
A-1025		320mm		(2)M8*18 SHCS,Washer and Economy T-Nut	0.44
A-1026		480mm		(2)M8*18 SHCS,Washer and Economy T-Nut	0.66
A-1027		640mm		(2)M8*18 SHCS,Washer and Economy T-Nut	0.88
A-1028	40-4080	160mm	40×80	(4)M8*18 SHCS,Washer and Economy T-Nut	0.49
A-1029		320mm		(4)M8*18 SHCS,Washer and Economy T-Nut	0.97
A-1030		480mm		(4)M8*18 SHCS,Washer and Economy T-Nut	1.46
A-1031		640mm		(4)M8*18 SHCS,Washer and Economy T-Nut	2.00
A-1032	40-4080C	160mm	40×80	(4)M8*18 SHCS,Washer and Economy T-Nut	0.39
A-1033		320mm		(4)M8*18 SHCS,Washer and Economy T-Nut	0.77
A-1034		480mm		(4)M8*18 SHCS,Washer and Economy T-Nut	1.15
A-1035		640mm		(4)M8*18 SHCS,Washer and Economy T-Nut	1.54
A-1036	45-4545	160mm	45×45	(2)M8*20 SHCS,Washer and Economy T-Nut	0.20
A-1037		320mm		(2)M8*20 SHCS,Washer and Economy T-Nut	0.39
A-1038		480mm		(2)M8*20 SHCS,Washer and Economy T-Nut	0.59
A-1039		640mm		(2)M8*20 SHCS,Washer and Economy T-Nut	0.78
A-1040	45-4545C	160mm	45×45	(2)M8*20 SHCS,Washer and Economy T-Nut	0.26
A-1041		320mm		(2)M8*20 SHCS,Washer and Economy T-Nut	0.52
A-1042		480mm		(2)M8*20 SHCS,Washer and Economy T-Nut	0.77
A-1043		640mm		(2)M8*20 SHCS,Washer and Economy T-Nut	1.03
A-1044	45-4590	160mm	45×90	(4)M8*20 SHCS,Washer and Economy T-Nut	0.63
A-1045		320mm		(4)M8*20 SHCS,Washer and Economy T-Nut	1.25
A-1046		480mm		(4)M8*20 SHCS,Washer and Economy T-Nut	1.87
A-1047		640mm		(4)M8*20 SHCS,Washer and Economy T-Nut	2.49

90° INSIDE CORNER CONNECTOR

DIE-CAST ZINC, ZINC-PLATED, SELF- ALIGNING

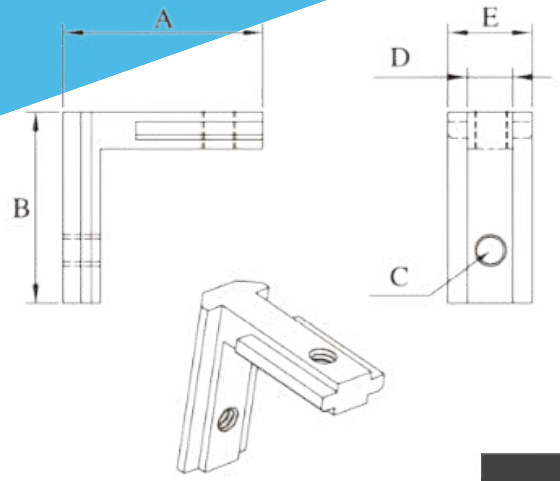

Part No	QTY	Description
5078	2	M5 × 8mm Threaded Insert

Part No	A	B	C	D	E	kg	Compatibility Code
2004	26	25	M5	5.8	10	0.011	OB20–6

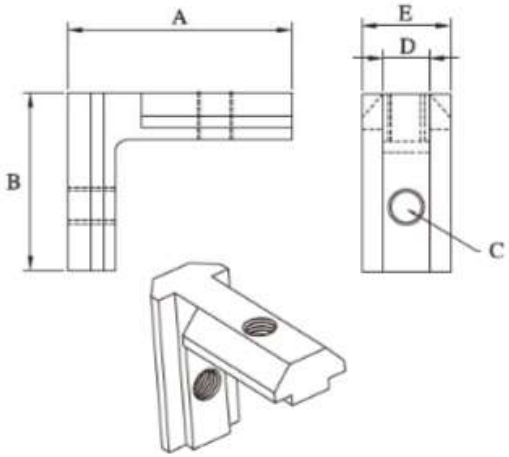

Part No	QTY	Description
5079	2	M6 × 8mm Threaded Insert
5079	2	M6 × 8mm Threaded Insert
5081	2	M8 × 10mm Threaded Insert

Part No	A	B	C	D	E	kg	Compatibility Code
2029	38	31	M6	7.8	15	0.031	OB30CL–8(Zn)
2005	38	31	M6	7.8	15	0.013	OB30CL–8(Al)
2031	38	31	M6	7.8	15	0.031	OB40CL–8(Zn)
2006	38	31	M6	7.8	15	0.013	OB40CL–8(Al)
2033	38	31	M8	9.8	19	0.042	OB45CL–10(Zn)
2007	38	31	M8	9.8	19	0.017	OB45CL–10(Al)

90° INSIDE CORNER CONNECTOR

DIE-CAST ZINC, NICKEL-PLATED, SELF- ALIGNING

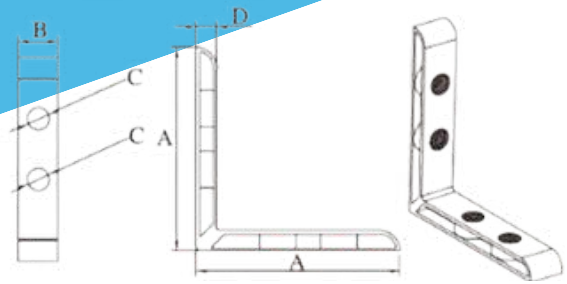

Part No	QTY	Description
5079	4	M6 × 8mm Threaded Insert
5081	4	M8 × 10mm Threaded Insert

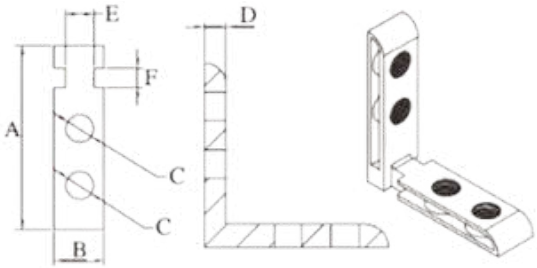

Part No	A	B	C	D	E	F	kg	Compatibility Code
2041	50	9.5	M6	5	—	—	0.018	30D–6
2042	48.6	13	M8	6	7.5	5	0.027	40D–8

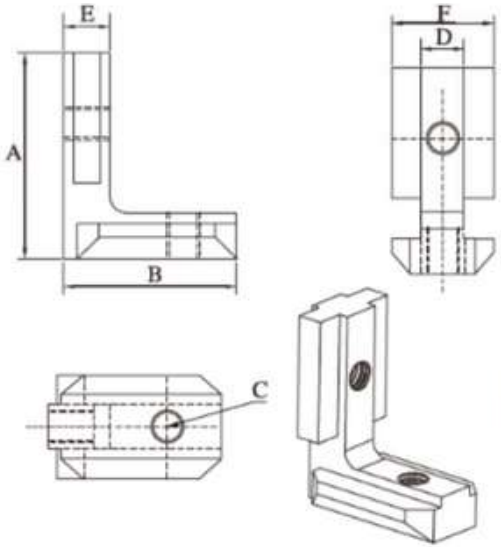

Part No	QTY	Description
5079	2	M6 × 8mm Threaded Insert
5080	2	M6 × 10mm Threaded Insert
5081	2	M8 × 10mm Threaded Insert

Part No	A	B	C	D	E	F	kg	Compatibility Code
2053	37	31	M6	8	7.5	14.5	0.03	30F–8
2054	38	32	M6	8	8.5	19	0.042	40F–8
2055	37.5	31	M8	10	7	17	0.034	45F–10

90° INSIDE CORNER CONNECTOR

STEEL, NICKEL-PLATED, SELF- ALIGNING

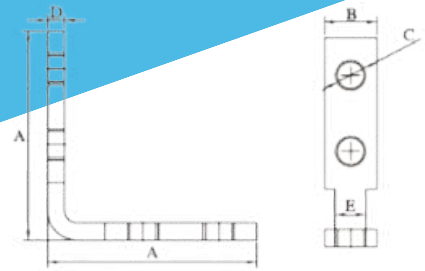

Part No	QTY	Description
5296	4	M4 × 5mm Threaded Insert
5296	4	M4 × 5mm Threaded Insert
5079	4	M6 × 8mm Threaded Insert
5079	4	M6 × 8mm Threaded Insert
5080	4	M6 × 10mm Threaded Insert
5080	4	M6 × 10mm Threaded Insert

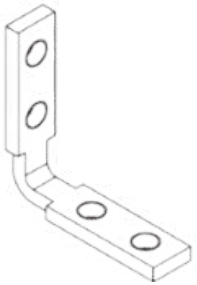

Part No	A	B	C	D	E	kg	Compatibility Code
2129	35	8	M4	2	6	0.0065	OB15H
2107	35	8.1	M4	3	6	0.010	OB20H
2108	35	8.1	M4	3	4	0.0095	GB20I
2109	45	13	M6	4.5	8	0.030	OB30H
2110	45	10.1	M6	4.5	6	0.022	GB30I
2111	55	13.8	M6	4.5	8	0.040	OB40H

DIE-CAST Al, SELF ALGNIN

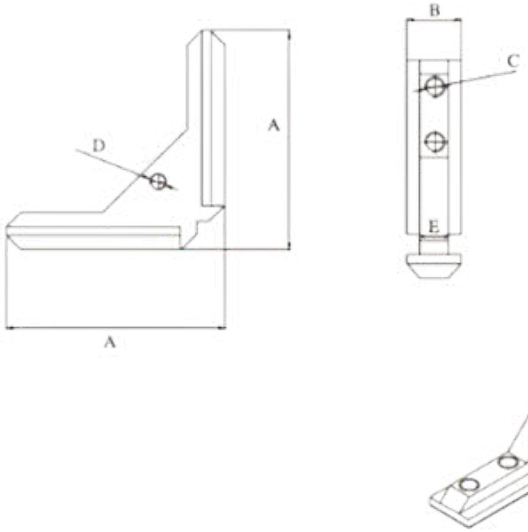

Part No	QTY	Description
5079	4	M6 × 8mm Threaded Insert

Part No	A	B	C	D	E	kg	Compatibility Code
2131	63.5	16	M6	M6	8.1	0.041	OB40J

90° INSIDE CORNER CONNECTOR

STEEL, NICKEL-PLATED, SELF- ALIGNING

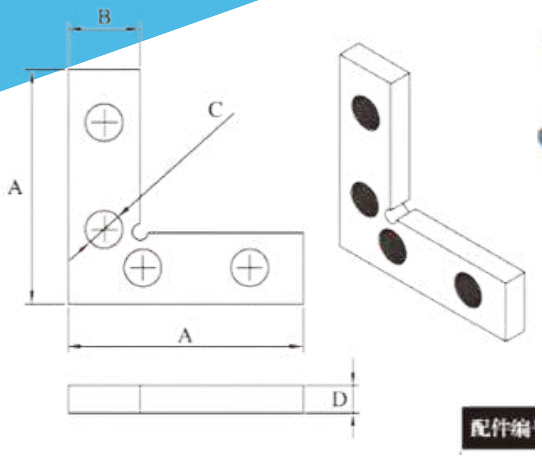

/Part No	QTY	Description
5078	4	M5 × 8mm Threaded Insert
5081	4	M8 × 10mm Threaded Insert

Part No	A	B	C	D	kg	Compatibility Code
2057	40	10	M5	4	0.018	30G
2058	44	13.5	M8	5	0.031	40G

CENTRAL CONNECTORS

STEEL, ZINC PLATED

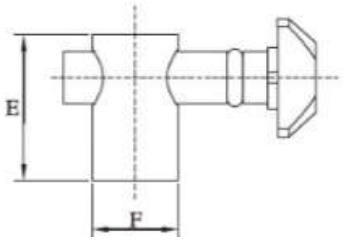

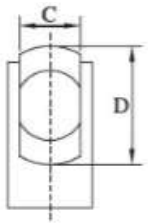

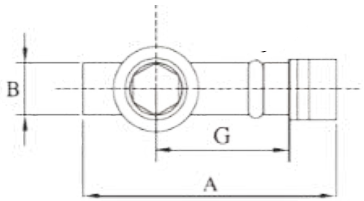

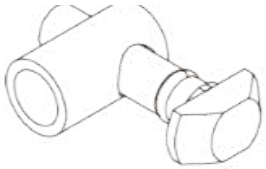

Part No	A	B	C	D	E	F	G	kg	Compatibility Code
5211	32.8	ϕ6.7	7.8	16	18	ϕ11	18	0.019	OB–P8–0° (槽8)
5212	32.8	ϕ6.7	7.8	16	18	ϕ11	18	0.019	OB–P8–90° (槽8)
5213	45	ϕ9.5	9.8	19	28	ϕ17	27	0.057	OB–P10–0° (槽10)
5214	45	ϕ9.5	9.8	19	28	ϕ17	27	0.057	OB–P10–90° (槽10)

CENTRAL CONNECTORS

STEEL, ZINC-PLATED

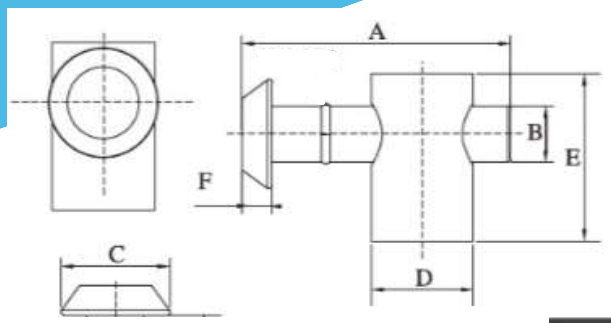

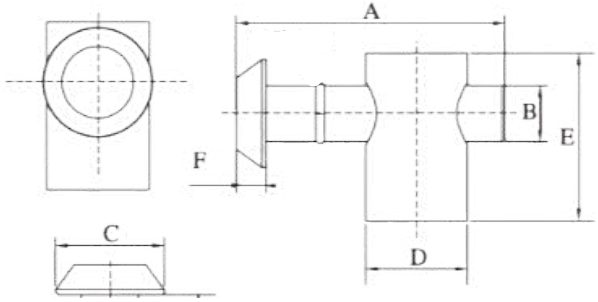

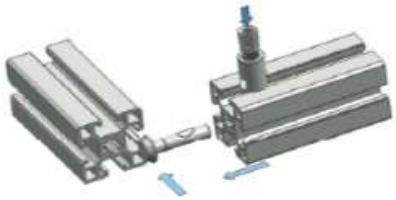

Part No	A	B	C	D	E	F	G	kg	Compatibility Code
5215	33	6.7	ϕ16	ϕ11	18.5	4.5	18	0.021	OB–GP8 (槽8)
5216	45	9.5	ϕ19	ϕ17	28	5	27	0.059	OB–GP10 (槽10)

STEEL, ZINC PLATED

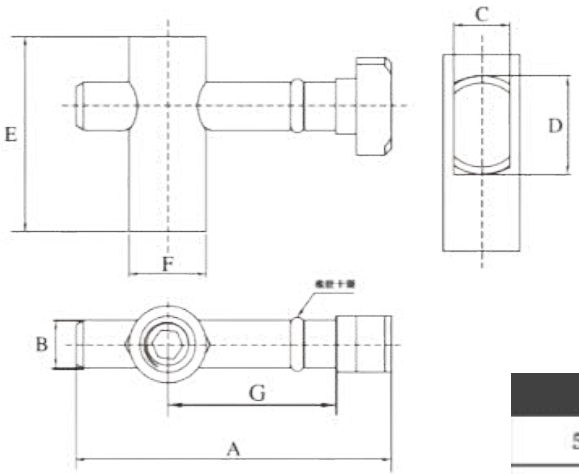

Part No	A	B	C	D	E	F	G	kg	Compatibility Code
5312	32.8	ϕ5	6	10.5	16.5	ϕ8	17.7	0.01	GB–P6–0° （槽6）
5313	32.8	ϕ5	6	10.5	16.5	ϕ8	17.7	0.01	GB–P6–90° （槽6）
5314	45	ϕ6.8	8	14	28	ϕ11	24	0.03	GB–P8–0° （槽8）
5315	45	ϕ6.8	8	14	28	ϕ11	24	0.03	GB–P8–90° （槽8）

STEEL, ZINC-PLATED

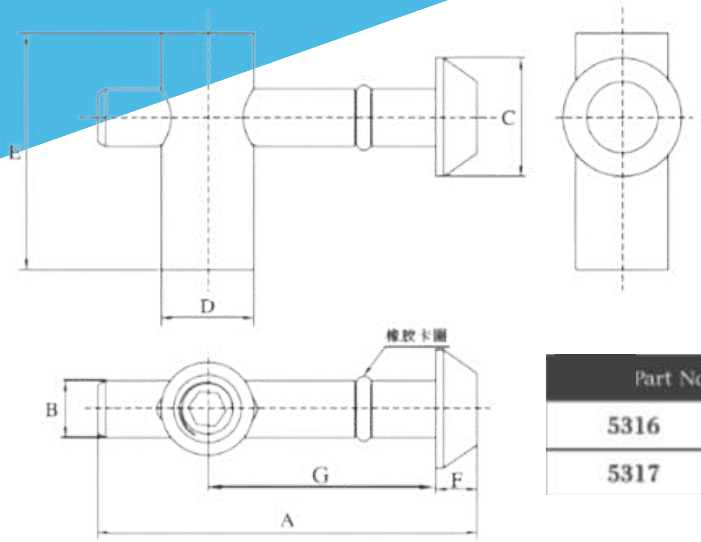

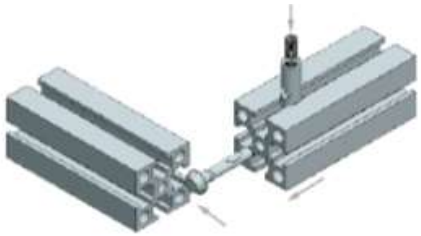

Part No	A	B	C	D	E	F	G	kg	Compatibility Code
5316	32.8	ϕ5	10.5	8	16.5	5	18.7	0.01	GB–GP6（槽6）
5317	45	ϕ6.8	14	11	28	5	27	0.032	GB–GP8（槽8）

STANDARD END FASTENERS

STEEL, NICKEL PLATED

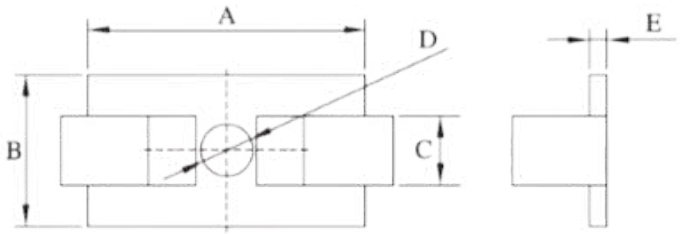

Part No	QTY	Description
5100	1	M6 x 16mm BHSCS
5104	1	M8 x 20mm BHSCS
5105	1	M8 x 25mm BHSCS

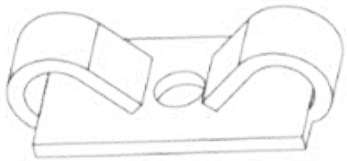

/Part No	A	B	C	D	E	kg	Compatibility Code
5187	17	10	5	ϕ6.5	1	0.002	OB20A
5082	23	15.5	8	ϕ8	1.5	0.006	OB30A
5083	32	17.5	8	ϕ8	2	0.01	OB40A

STEEL, NICKEL PLATED

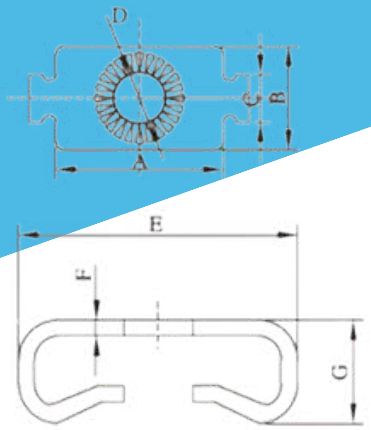

Part No	QTY	Description
5097	1	M5 × 16mm BHSCS
5101	1	M6 × 20mm BHSCS
5105	1	M8 × 25mm BHSCS
5217	1	M12 × 30mm BHSCS
5097	1	M5 × 16mm BHSCS
5101	1	M6 × 20mm BHSCS
5105	1	M8 × 25mm BHSCS

Part No	A	B	C	D	E	F	G	kg	Compatibility Code
5118	16.5	10	5	ϕ5.5	19.3	1	4.6	0.003	OB20B
5392	18	12	6	ϕ6.5	22	1	5	0.004	OB25B
5119	21	13	6	ϕ6.5	28.7	2	7.6	0.006	OB30B
5120	27.7	17	7.7	ϕ9	35	2	10	0.01	OB40B
5125	30	21	10	ϕ12.5	40.5	2	12	0.015	OB45B
5126	17	8	4.2	ϕ5.2	20	1	4.8	0.002	GB20C
5127	21	10	6	ϕ6.2	29	2	7.0	0.005	GB30C
5128	27	13.8	8	ϕ8.5	33.9	2	8.8	0.009	GB40C

STEEL, NICKEL PLATED

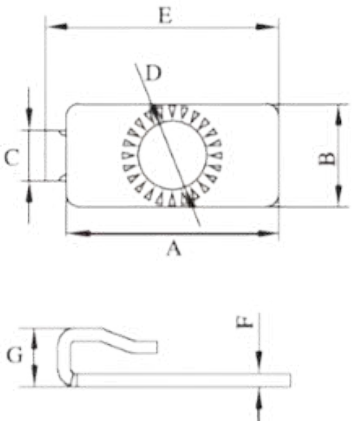

Part No	QTY	Description
5100	1	M6 × 16mm BHSCS
5104	1	M8 × 20mm BHSCS
5105	1	M8 × 25mm BHSCS
5217	1	M12 × 30mm BHSCS

Part No	A	B	C	D	E	F	G	kg	Compatibility Code
5393	16.5	10	6	ϕ6.5	18	1	4.5	0.0015	OB20D
5394	18	12	6	ϕ6.5	20	1	5	0.0025	OB25D
5395	21	15.5	8	ϕ8.5	25	1.5	7	0.005	OB30D
5396	30	20	8	ϕ8.5	32.5	2	9	0.009	OB40D
5397	30	21	10	ϕ12.5	35.25	2	12	0.013	OB45D

STEEL, NICKEL PLATED

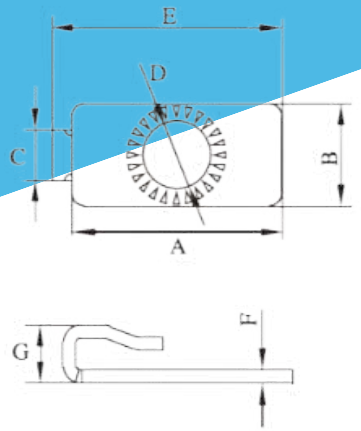

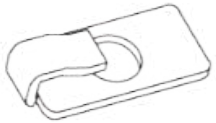

Part No	QTY	Description
5100	1	M6 × 16mm BHSCS
5104	1	M8 × 20mm BHSCS
5105	1	M8 × 25mm BHSCS
5217	1	M12 × 30mm BHSCS

Part No	A	B	C	D	E	F	G	kg	Compatibility Code
5398	16.5	8	4	ϕ5.3	18	1	4.5	0.001	GB20E
5399	21	9.8	6	ϕ6.5	25	1.5	7	0.0045	GB30E
5400	30	13.8	8	ϕ8.5	32.5	2	9	0.008	GB40E

STEEL, NICKEL PLATED

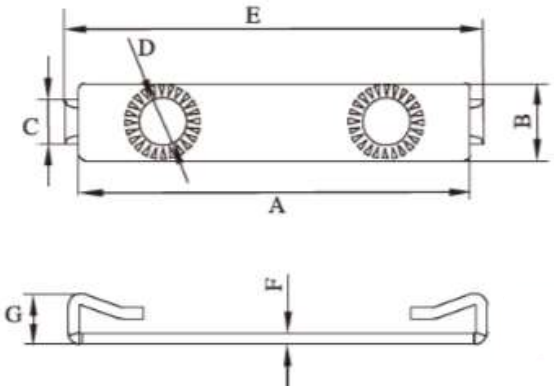

Part No	QTY	Description
5100	2	M6 × 16mm BHSCS
5104	2	M8 × 20mm BHSCS
5105	2	M8 × 25mm BHSCS
5217	2	M12 × 30mm BHSCS

Part No	A	B	C	D	E	F	G	kg	Compatibility Code
5401	36.5	10	6	ϕ6.5	39.5	1	4.5	0.003	OB2040B
5402	43	12	6	ϕ6.5	47	1	5	0.005	OB2550B
5403	51	15.5	8	ϕ8.5	59	1.5	7	0.010	OB3060B
5404	70	20	8	ϕ8.5	75	2	9	0.018	OB4080B
5405	75	21	10	ϕ12.5	85.5	2	12	0.025	OB4590B

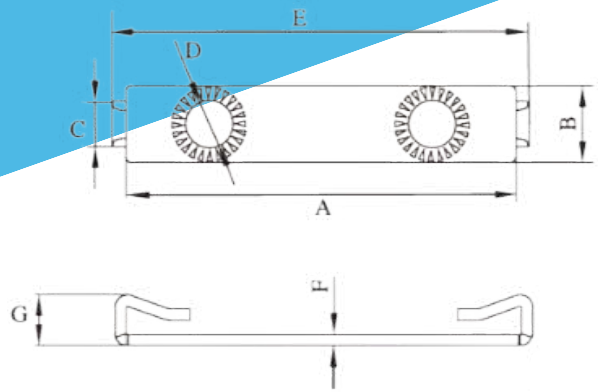

STEEL, NICKEL PLATED

Part No	QTY	Description
5100	2	M6 × 16mm BHSCS
5104	2	M8 × 20mm BHSCS
5105	2	M8 × 25mm BHSCS
5217	2	M12 × 30mm BHSCS

/Part No	A	B	C	D	E	F	G	kg	Compatibility Code
5406	36.5	8	4	ϕ5.3	39.5	1	4.5	0.002	GB2040C
5463	51	9.8	6	ϕ6.5	59	1.5	7	0.009	GB3060C
5464	70	13.8	8	ϕ8.5	75	2	9	0.018	GB4080C

FIXED INSIDE FASTENER

DIE-CAST ZINC, NICKED PLATED, SELF-ALIGNING

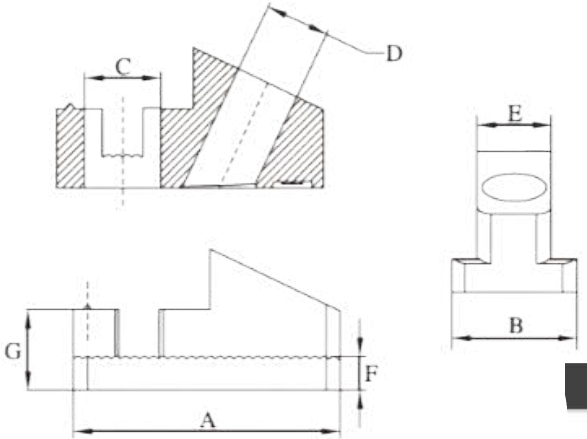

/Part No	QTY	Description
5102&5224	1	M8 × 16mm BHSCS & Threaded Insert
5102&5224	1	M8 × 16mm BHSCS & Threaded Insert

Part No	A	B	C	D	E	F	G	kg	Compatibility Code
2045	28	13.4	ϕ8.2	M8	8	4	8.5	0.012	40–8
2052	29	18	ϕ8.2	M8	10	4	8.5	0.017	45(ϕ8)–10

PLATE CONNECTORS

DIE-CAST ZINC, SILVER POWDER COATING

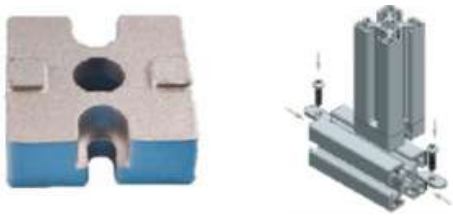

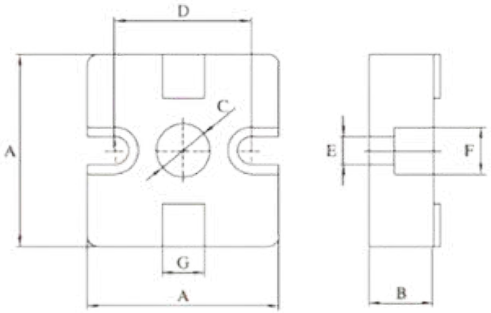

Part No	QTY	Description
5149&5146&5066	1&2&2	M8 × 20mm SHCS & M5 × 16mm SHCS & Slide-In T-Nuts
5149&5146&5069	1&2&2	M8 × 20mm SHCS & M6 × 16mm SHCS & Slide-In T-Nuts
5217&5100 & 5335	1&2&2	M12 × 30mm BHSCS & M6 × 20mm BHSCS & Slide-In T-Nuts

Part No	A	B	C	D	E	F	G	kg	Compatibility Code
2141	30	15	ϕ8.5	21	5.5	9	8	0.0429	30A
2142	40	15	ϕ8.5	31	5.5	9	8	0.0672	40A
2064	45	15	ϕ12.5	32	6.5	11	10	0.069	45A

INJECTION MOLDING PA66+GF30

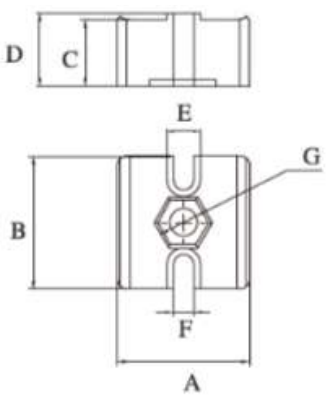

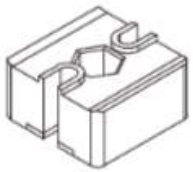

Part No	QTY	Description
5149&5243& 5492-Z	1&2&1	M8 × 20mm SHCS & M6 × 30mm SHCS & Roll-In T-Nut

Part No	A	B	C	D	E	F	G	kg	Compatibility Code
ML-1086-10	40	40	20	22	10	6	ϕ8.3	0.0353	40B

END CAPS

STEEL, ZINC PLATED, SELF ALIGNING

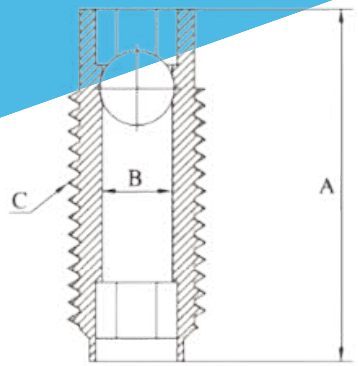

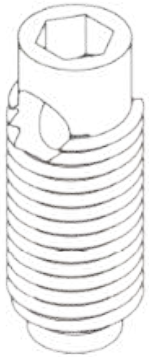

Part No	QTY	Description
5245	1	M6 × 40 SHCS
5255	1	M5 × 30 SHCS
5503	1	M4 × 25 SHCS

Part No	A	B	C	kg	Compatibility Code
5291	31	ϕ6.2	M12	0.013	40
5293	27	ϕ5.2	M10	0.008	30
5294	24	ϕ4.2	M7	0.003	20

BOLD CONNECTORS

STEEL, ZINC PLATED

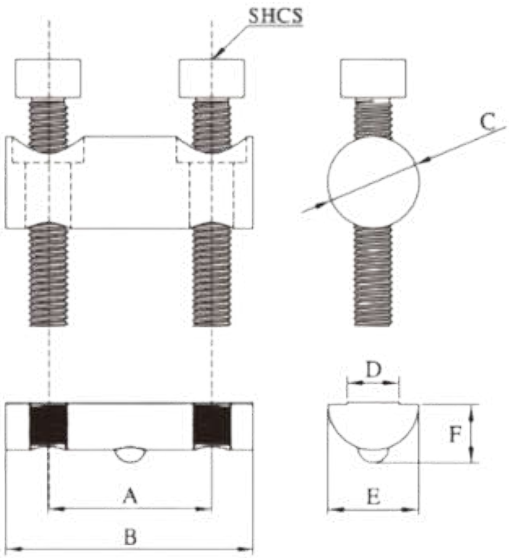

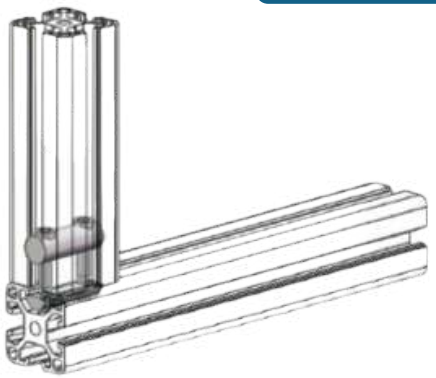

Part No	A	B	C	D	E	F	SHCS	kg	Compatibility Code
5326	18	30	ϕ12	8	13	7.8	M5 × 25	0.045	30T
5327	27	40	ϕ14	8	13.8	8.8	M6 × 35	0.07	40T
5328	32	45	ϕ14	10	16	9.8	M8 × 45	0.09	45T

PARALLEL CONNCETOR

Al CNC MANUFACTURE, SILVERY WHITE ANODIZING

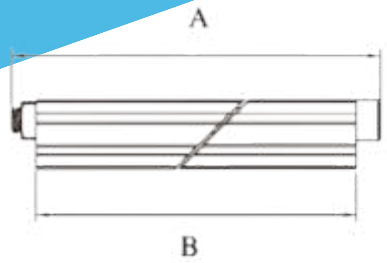

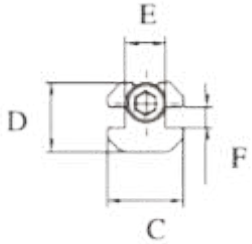

Part No	A	B	C	D	E	F	kg	Compatibility Code
2152	74.8	65	15.5	14.2	7.9	4.2	0.040	30A
2153	74.8	65	18	21.2	7.9	9.2	0.055	40A
ML-1064	74.8	65	16.7	21.2	9.7	8.8	0.060	40B-10
2154	74.8	65	18	21.2	9.7	9.1	0.062	45A

180° INSIDE CORNER CONNECTOR

STEEL, ZINC /ALUMINIUM, NATURAL FINISH

Part No	QTY	Description
5371	4	M5×6mm Threaded Insert
5079	4	M6×8mm Threaded Insert
5080	4	M6×10mm Threaded Insert
5081	4	M8×10mm Threaded Insert

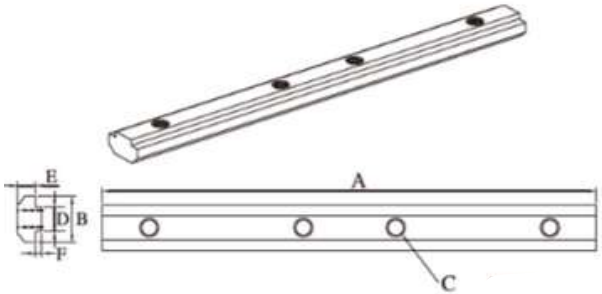

Part No	A	B	C	D	E	F	kg	Compatibility Code
2063	100	9.7	M5	5.9	4	1	0.026	20B-6
2018	160	15	M6	8	4	2	0.027	30A-8(Al)
2027	160	15	M6	8	4	2	0.09	30B-8
2019	180	19.5	M6	8	6.4	3	0.062	40A-8(Al)
2028	180	19.5	M6	8	6.4	3	0.182	40B-8
2020	180	19.5	M8	10	5.5	5	0.187	45B-10
2149	180	19.6	M8	9.8	4.8	3.4	0.064	45A(Al)

180° INSIDE CORNER CONNECTOR

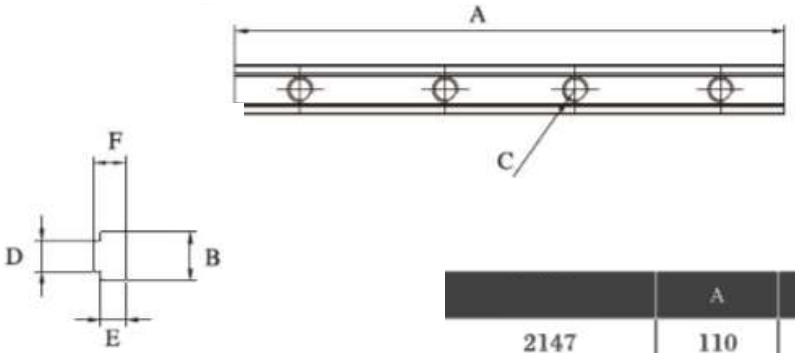

Part No	QTY	Description
5078	4	M5 × 8mm Threaded Insert
5080	4	M6 × 10mm Threaded Insert

	A	B	C	D	E	F	kg	Compatibility Code
2147	110	10	M5	6	5	6.5	0.0158	30
2148	140	13	M6	8	6.5	9.2	0.0365	40

STEEL, ZINC PLATED

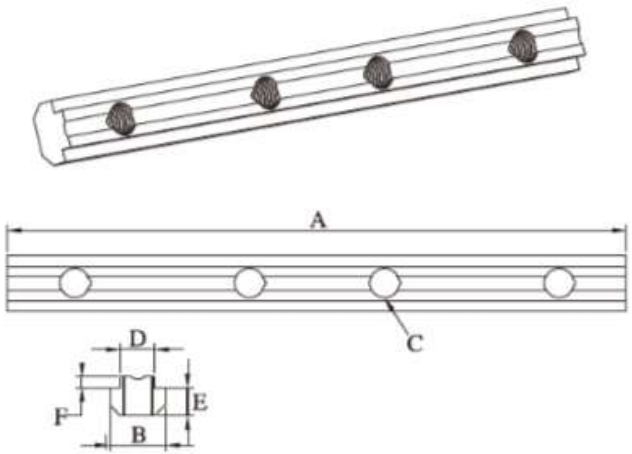

Part No	QTY	Description
5078	4	M5 × 8mm Threaded Insert
5080	4	M6 × 10mm Threaded Insert

Part No	A	B	C	D	E	F	kg	Compatibility Code
2043	110	10	M5	6	5	2	0.044	GB30C–6
2044	140	13.5	M6	8	6.5	3	0.104	GB40C–8

DOUBLE ANCHOR FESTENERS

DIE-CAST ZINC, ZINC PLATED, SELF ALIGNING

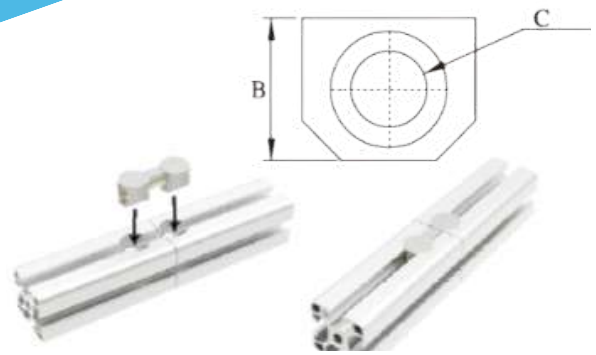

/Part No	QTY	Description
5300	1	M4 × 16mmSHCS
5232	1	M6 × 25mmSHCS
5243	1	M6 × 30mmSHCS
5250	1	M8 × 30mmSHCS
5250	1	M8 × 30mmSHCS

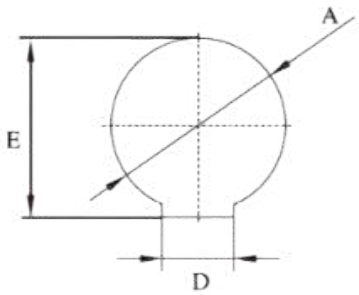

Part No	A	B	C	D	E	kg	Compatibility Code
2133	ϕ12	8.5	M4	6	12.6	0.0041	20C–6
2134	ϕ15	12	M6	6	15.5	0.0093	25C–6
2135	ϕ15	12	M6	8	15.7	0.0098	30C–8
2136	ϕ19.5	16	M8	8	19.9	0.0216	40C–8
2137	ϕ19.5	16	M8	10	19.6	0.0224	45C–10

STEEL, ZINC PLATED

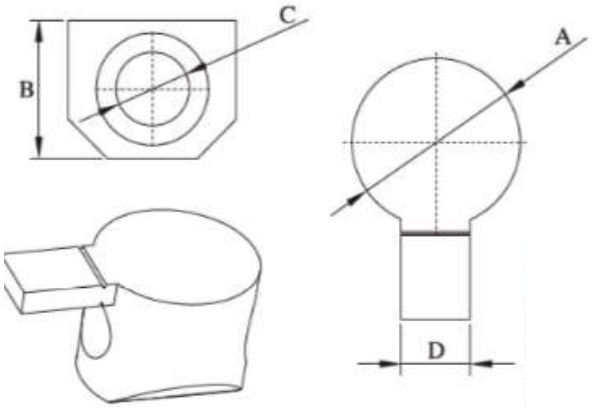

Part No	QTY	Description
5300 & 5338	1	M4 × 16mm SHCS & Econ T–Nut
5109 & 5343	1	M6 × 20mm SHCS & Econ T–Nut
5109 & 5343	1	M6 × 20mm SHCS & Econ T–Nut
5111 & 5344	1	M8 × 25mm SHCS & Econ T–Nut
5111 & 5074	1	M8 × 20mm SHCS & Slide–In T–Nuts

Part No	A	B	C	D	kg	Compatibility Code
2127	ϕ12	8.5	ϕ4.5	6	0.004	20B–6
2128	ϕ15	12	ϕ7	6	0.006	25B–6
2132	ϕ15	12	ϕ7	8	0.007	30B–8
2038	ϕ19.5	16	ϕ8.5	8	0.021	40B–8
2130	ϕ19.5	16	ϕ8.5	10	0.018	45B–10

DIE-CAST ZINC, ZINC PLATED, SELF ALIGNING

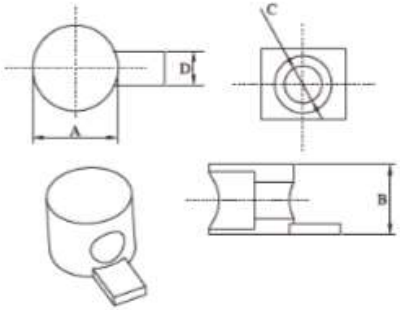

Part No	QTY	Description
5300 & 5338	1	M4×16mm SHCS & Econ T–Nut
5109 & 5138	1	M6×20mm SHCS & Econ T–Nut
5111 & 5142	1	M8×25mm SHCS & Econ T–Nut

/Part No	A	B	C	D	kg	Compatibility Code
2074	ϕ12	8.5	ϕ4.5	5	0.004	20A–5
2001	ϕ15	12	ϕ7	6	0.008	30A–6
2112	ϕ15	12	ϕ7	8	0.011	30A–8
2002	ϕ19.5	16	ϕ8.5	8	0.018	40A–8

DIE-CAST ZINC, ZINC PLATED, SELF ALIGNING

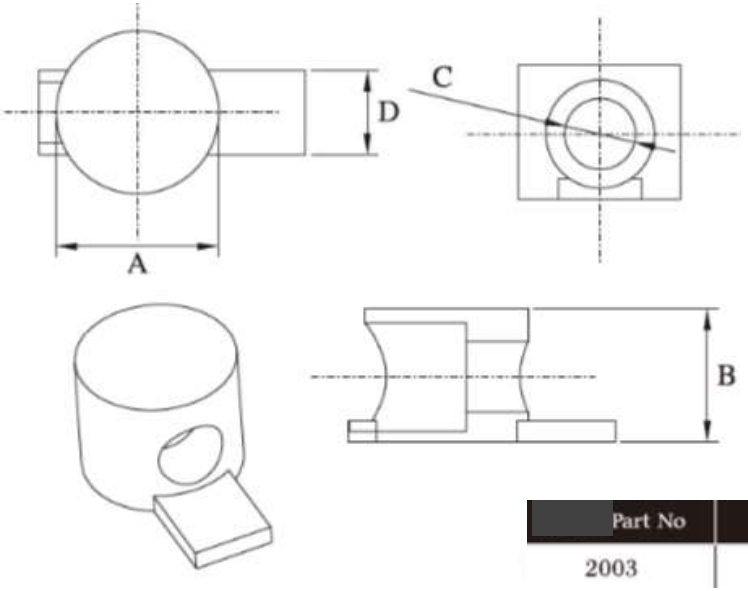

Part No	QTY	Description
5111 & 5343	1	M8×25mm SHCS & Econ T–Nut

Part No	A	B	C	D	kg	Compatibility Code
2003	19.5	16	ϕ8.5	10	0.0195	45A–10

DIE-CAST ZINC, ZINC PLATED, SELF ALIGNING

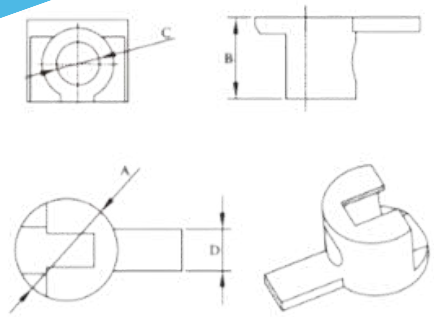

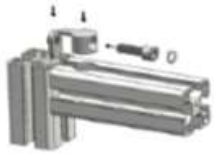

/Part No	QTY	Description
5109 & 5277	1	M6 × 20mm SHCS & Econ T-Nut

Part No	A	B	C	D	kg	Compatibility Code
2026	ϕ15	12	ϕ6.3	6	0.006	30B-6

ANGLE PROFILE CONNECTOR

STEEL ZINC PLATED

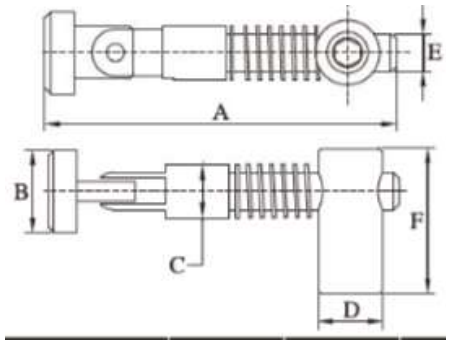

Part No	A	B	C	D	E	F	kg	Compatibility Code
5121	40.5	ϕ9.8	5.8	ϕ6.8	ϕ4.4	15	0.01	20-0°
5354	40.5	ϕ9.8	5.8	ϕ6.8	ϕ4.4	15	0.01	20-90°
5122	59	ϕ13.8	9.8	ϕ9.8	ϕ6	20	0.032	30-0°
5355	59	ϕ13.8	9.8	ϕ9.8	ϕ6	20	0.032	30-90°
5123	59	ϕ15.8	9.8	ϕ10.8	ϕ6.4	25	0.038	40-0°
5356	59	ϕ15.8	9.8	ϕ10.8	ϕ6.4	25	0.038	40-90°
5124	59	ϕ17.8	9.8	ϕ13.8	ϕ7.6	29	0.054	45-0°
5357	59	ϕ17.8	9.8	ϕ13.8	ϕ7.6	29	0.054	45-90°

CENTER ADJUSTABLE ANGLE CONNECTOR

STEEL, ZINC PLATED

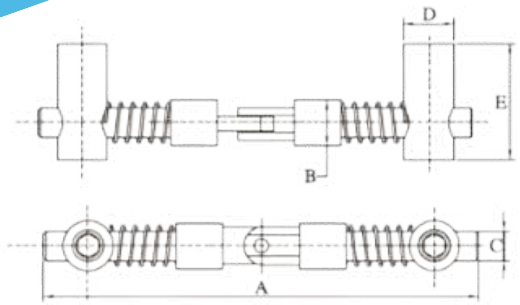

Part No	A	B	C	D	E	kg	Compatibility Code
5329	65	5.8	ϕ4.4	ϕ6.8	15	0.015	20–0°
5219	65	5.8	ϕ4.4	ϕ6.8	15	0.015	20–90°
5330	95	9.8	ϕ6	ϕ9.8	20	0.048	30–0°
5220	95	9.8	ϕ6	ϕ9.8	20	0.048	30–90°
5331	95	9.8	ϕ6.4	ϕ10.8	25	0.059	40–0°
5221	95	9.8	ϕ6.4	ϕ10.8	25	0.059	40–90°
5332	95	9.8	ϕ7.6	ϕ13.8	29	0.088	45–0°
5222	95	9.8	ϕ7.6	ϕ13.8	29	0.088	45–90°

SIMPLY ANY ANGLE CONNECTOR

STEEL ZINC PLATED

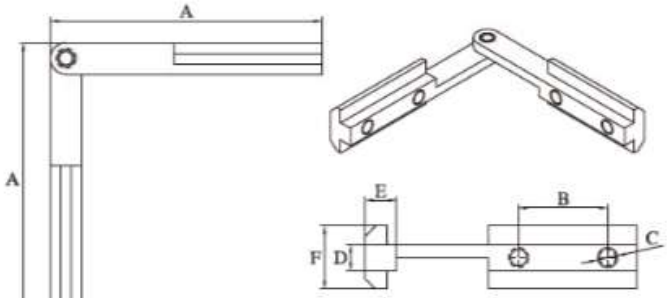

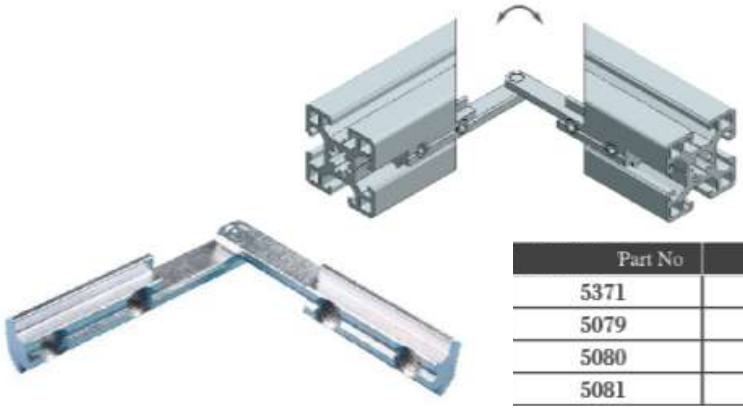

Part No	QTY	Description
5371	4	M5 × 6mm & Threaded Insert
5079	4	M6 × 8mm & Threaded Insert
5080	4	M6 × 10mm & Threaded Insert
5081	4	M8 × 10mm & Threaded Insert

Part No	A	B	C	D	E	F	kg	Compatibility Code
5346	74	27	M5	5.8	4.4	9.4	0.024	OB20A
5348	62	27	M6	8	5.8	15.7	0.054	OB30A
5350	82.5	27	M6	8	9.5	19.5	0.095	OB40A
5352	82.5	27	M8	10	8.5	19.5	0.094	OB45A

STEEL, ZINC PLATED

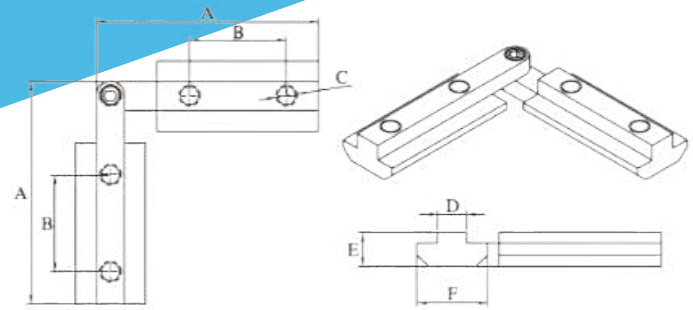

Part No	QTY	Description
5371	4	M5 ×6mm & Threaded Insert
5079	4	M6 ×8mm & Threaded Insert
5080	4	M6 ×10mm & Threaded Insert
5081	4	M8 ×10mm & Threaded Insert

Part No	A	B	C	D	E	F	kg	Compatibility Code
5347	74	27	M5	5.8	4.4	9.4	0.026	OB20B
5349	62	27	M6	8	5.8	15.7	0.055	OB30B
5351	62	27	M6	8	9.5	19.5	0.109	OB40B
5353	62	27	M8	10	8.5	19.5	0.108	OB45B

STEEL ZINC PLATED

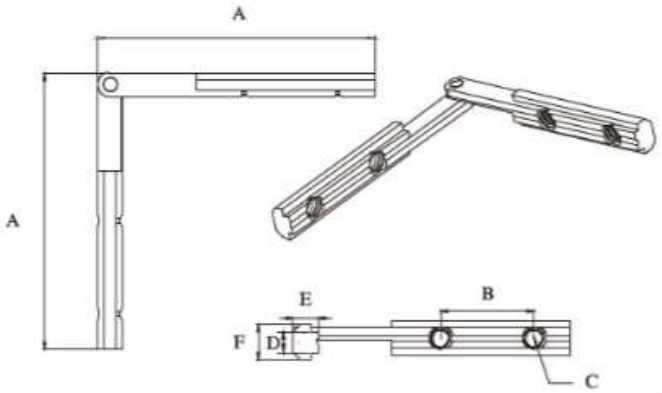

Part No	QTY	Description
5371	4	M5 ×6mm & Threaded Insert
5079	4	M6 ×8mm & Threaded Insert

Part No	A	B	C	D	E	F	kg	Compatibility Code
5471	74	27	M5	6	7	10	0.050	GB30C
5473	82.5	27	M6	8	9.5	13.5	0.090	GB40C

STEEL, ZINC PLATED

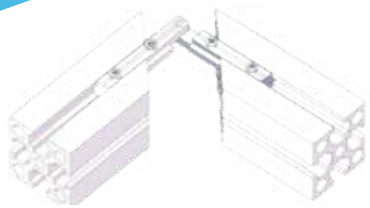

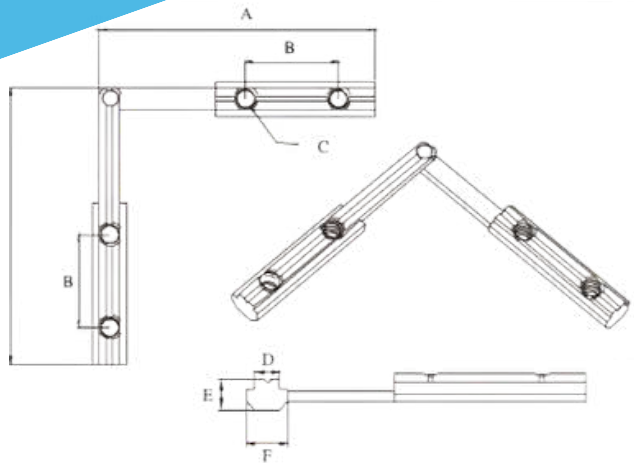

Part No	QTY	Description
5371	4	M5 ×6mm & Threaded Insert
5079	4	M6 ×8mm & Threaded Insert

Part No	A	B	C	D	E	F	kg	Compatibility Code
5472	80	27	M5	6	7	10	0.050	GB30D
5474	62	27	M6	8	9.5	13.5	0.104	GB40D

SOCKET HEAD CAP SCREW

STEEL,NICKEL-PLATED/ZINC PLATED, SELFALIGNING

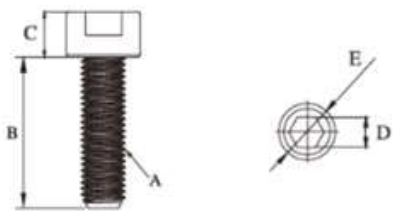

Part No	Compatibility Code	A	B	C	D	E	kg
5364	SHCS	M4	6	3	3	6	0.001
5366			8				0.001
5368			10				0.002
5145			12				0.002
5300			16				0.003
5503			25				0.006
5239		M5	8	4.7	4	7.6	0.002
5140			10				0.002
5358			12				0.003
5146			16				0.004
5230			20				0.006
5242			25				0.007
5255			30				0.008
5369		M6	8	5.9	5	9.3	0.003
5363			10				0.004
5147			12				0.005
5373			14				0.006
5148			16				0.006
5109			20				0.007
5232			25				0.011
5243			30				0.013
5244			35				0.015
5245			40				0.017
5246			45				0.019
5247			50				0.022
5248			60				0.025
5249		M8	12	7.3	6	11.2	0.010
5370			14				0.011
5110			16				0.011
5378			18				0.012
5149			20				0.013
5111			25				0.015
5250			30				0.016
5251			35				0.017
5112			40				0.019
5038			45				0.021
5150			60				0.027
5234			65				0.029
5261			70				0.032
5465			75				0.035
5151			80				0.037
5252			85				0.040
5152			100				0.045
5382			105				0.047
5153			110				0.049
5154			120				0.051
5113		M12	30	11.2	10	17	0.037
5155			40				0.047
5114			50				0.057
5115			60				0.067
5116			80				0.087
5117			100				0.107

LOW HEAD SOCKET CAP SCREW

STEEL, ZINC PLATED

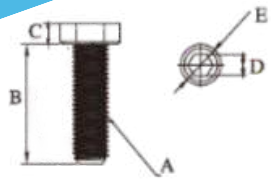

Part No	Compatibility Code	A	B	C	D	E	kg
5486-ZT8	LHSCS	M8	16	4.8	5	12.9	0.007
5487-ZT8			20				0.010
5488-ZT8			25				0.011
5489-ZT8			30				0.013
5502-ZT8			40				0.018

FLANGED SOCKET HEAD CAP SCREW

STEEL, ZINC PLATED

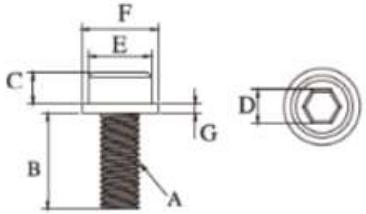

Part No	Compatibility Code	A	B	C	D	E	F	G	kg
5504	FSHCS	M5	8	5	4	8	11	1.2	0.004
5505			10						0.004
5506			12						0.004
5507			16						0.005
5508			20						0.005
5509		M6	12	6.5	5	10	12.6	1.5	0.007
5510			16						0.008
5511			20						0.009
5512			25						0.010
5513		M8	12	8	6	13	16	2	0.013
5514			16						0.014
5515			20						0.016
5516			25						0.017
5517			30						0.019

BUTTON HEAD SOCKET SCREW

STEEL, NICKEL PLATED/ZINC PLATED, SELF ALIGNING

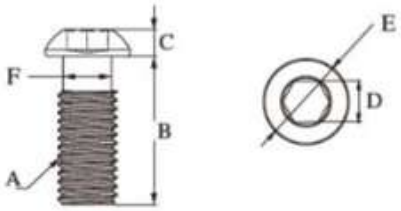

Part No	A	B	C	D	E	F	kg	Compatibility Code
5108	M12	30	5.3	6	19.5	8	0.029	BHSCS
5217	M12	30	5.7	6	20	10	0.032	

BUTTON HEAD SOCKET SCREW

STEEL,NICKEL PLATED/ ZINC PLATED, SELF ALIGNING

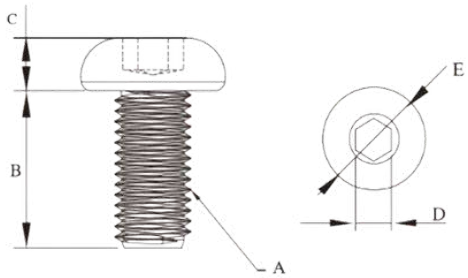

Part No	Compatibility Code	A	B	C	D	E	kg
5295	BHSCS	M4	6	2	2.5	7	0.001
5160			8				0.001
5161			10				0.001
5162			12				0.002
5163			16				0.003
5094		M5	8	3	3	9	0.002
5095			10				0.003
5096			12				0.004
5097			16				0.005
5240			20				0.007
5379			23				0.008
5241			25				0.009
5362		M6	6	4	3	10.3	0.002
5361			8				0.003
5098			10				0.003
5099			12				0.004
5375			14				0.004
5100			16				0.005
5292			16B				0.005
5101			20				0.006
5381			23				0.006
5164			25				0.007
5297			30				0.008
5165			35				0.008
5223		M8	12	4.85	5	13.9	0.008
5372			14				0.008
5102			16				0.009
5103			18				0.010
5104			20				0.010
5105			25				0.012
5106			30				0.014
5107			40				0.016

FLAT HEAD SOCKET CAP

STEEL,NICKEL PLATED/ ZINC PLATED, SELF ALIGNING

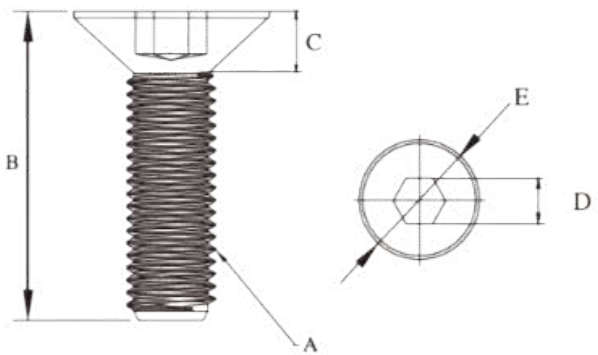

Part No	Compatibility Code	A	B	C	D	E	kg
5365	FHSCS	M4	8	2	2.4	7.3	0.001
5084			10				0.001
5227		M5	8	3	3	9.2	0.002
5085			10				0.002
5256			12				0.003
5377			14				0.004
5253			16				0.004
5254			20				0.005
5086		M6	10	3	4	11	0.003
5087			12				0.004
5374			14				0.005
5088			16				0.005
5231			18				0.006
5156			20				0.007
5157			30				0.008
5367			16	3	4	8.6	0.005
5089		M8	16	4.5	5	14	0.008
5090			20				0.009
5091			25				0.010
5158			40				0.014
5233			45				0.016
5092		M12	25	4.5	6	17.5	0.021
5093			30				0.025

DROP-IN T-STUDS

STEEL,NICKEL PLATED, SELF ALIGNING

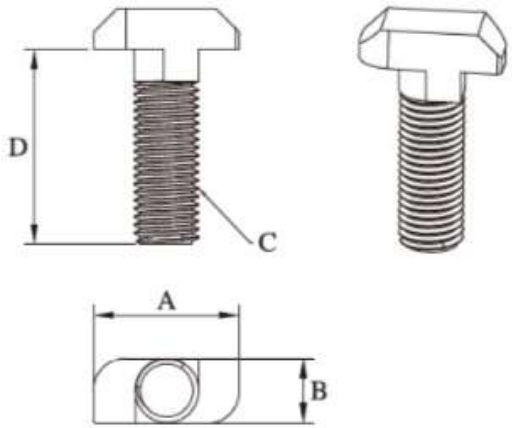

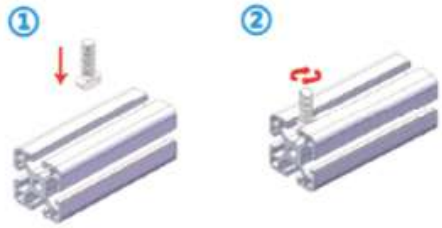

Part No	A	B	C	D	kg	Compatibility Code
5384	10.3	5.9	M5	10	0.003	OB20
5385				12	0.003	
5386				16	0.004	
5387				20	0.006	
5298	16	8	M6	12	0.006	OB30
5022				16	0.007	
5023				20	0.008	
5024				25	0.009	
5025	18	8	M8	16	0.009	OB40
5026				20	0.010	
5167				23	0.011	
5027				25	0.013	
5262				30	0.014	
5028				35	0.015	
5263				40	0.016	
5029	19.5	8.5	M8	16	0.010	OB45
5030				20	0.013	
5031				25	0.015	
5280				30	0.017	
5032				35	0.018	
5033				40	0.020	
5168	20.5	10	M10	30	0.020	
5169				35	0.023	
5170				45	0.029	
5171				50	0.032	

DROP-IN T-STUDS

STEEL,NICKEL PLATED, SELF ALIGNING

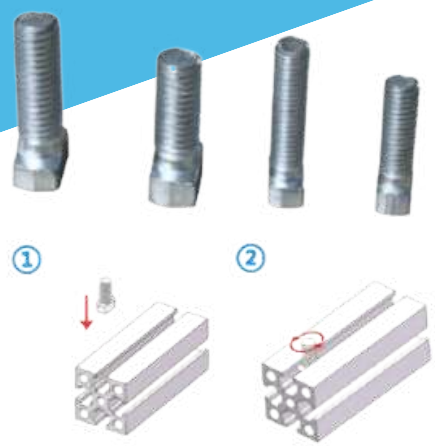

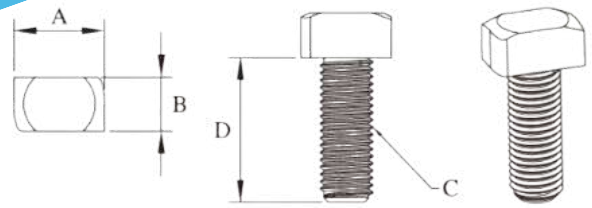

Part No	A	B	C	D	kg	Compatibility Code
5299	10	6	M6	12	0.004	GB30
5237				16	0.005	
5039				20	0.006	
5040				25	0.007	
5278	14	8	M8	16	0.010	GB40
5042				20	0.011	
5043				25	0.013	
5044				30	0.015	
5045				35	0.017	

WEDGE FLOOR ANCHOR

STEEL, NICKEL PLATED, SELF ALIGNING

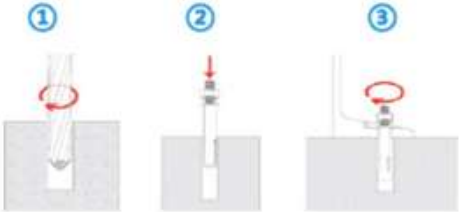

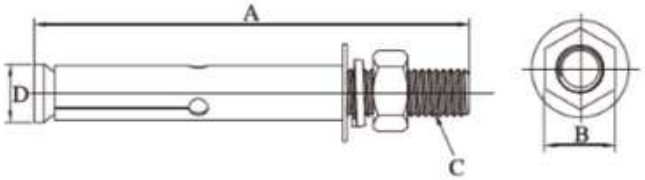

Part No	A	B	C	D	kg
5267	51	10	M6	8	0.016
5268	92	14	M8	10	0.045
5269	93	17	M10	12	0.066
5376	90	19	M12	12	0.088

SLIDE-IN ECONOMY T-NUTS

STEEL,NICKEL PLATED, SELF ALIGNING

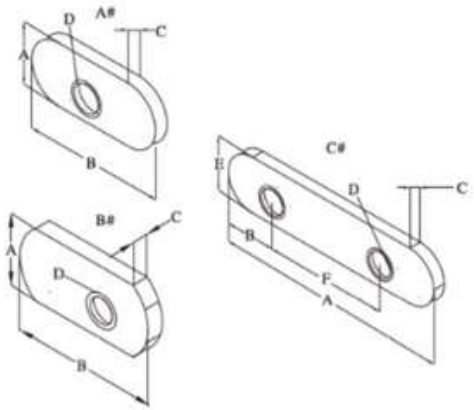

Part No	Style	A	B	C	D	E	F	Compatibility Code
5131	#A	10.8	25.4	1.5	M4	/	/	
5132	#A	10.8	25.4	1.5	M5	/	/	
5133	#B	10.8	15.87	1.5	M4	/	/	20A
5134	#B	10.8	15.87	1.5	M5	/	/	
5190	#C	40	10	1.5	M5	10.8	20	
5225	#C	47.6	11.3	1.5	M6	13.5	25	
5226	#A	11.25	25.4	2.5	M6	/	/	
5318	#A	11.25	25.4	2.5	1/4–20	/	/	25A
5228	#B	11.25	15.87	3.0	M5	/	/	
5229	#B	11.25	15.87	3.0	M6	/	/	
5135	#A	13.5	25.4	3.6	M6	/	/	
5136	#A	13.5	25.4	3.6	M8	/	/	
5137	#A	13.5	25.4	3.6	5/16–18	/	/	30A
5138	#B	13	20.6	3.2	M6	/	/	
5139	#C	47.6	8.8	2.5	M6	13.5	30	
5383	#A	12.8	20.6 / 28.57	3.17	1/4–20	/	/	
5141	#A	12.8	28.57	3.17	M6	/	/	
5142	#B	16	24.99	3.6	M8	/	/	40A
5143	#B	16	24.99	3.6	5/16–18	/	/	
5144	#C	75	17.5	3.6	M8	16	40	

SLIDE-IN ECONOMY T-NUTS

STEEL,NICKEL PLATED, SELF ALIGNING

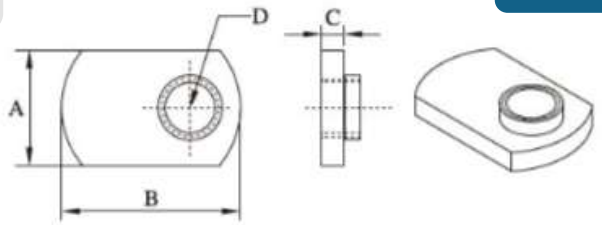

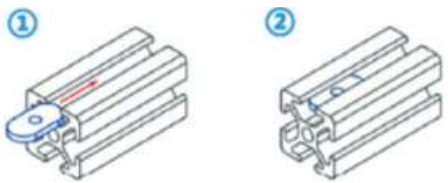

Part No	A	B	C	D	kg	Compatibility Code
5319	8.3	15.87	1.5	M4	0.002	15B
5320	8.3	15.87	1.5	M5	0.002	
5338	10.8	15.87	1.5	M4	0.003	20B
5339	10.8	15.87	1.5	M5	0.003	
5340	11.25	15.87	3	M5	0.004	25B
5341	11.25	15.87	3	M6	0.004	
5342	13	20.6	3	M5	0.006	30B
5343	13	20.6	3	M6	0.006	
5359	16	25	3	M6	0.008	40B
5344	16	25	3	M8	0.008	
5345	16	25	3	5/16–18	0.008	

SLIDE-IN T-NUTS

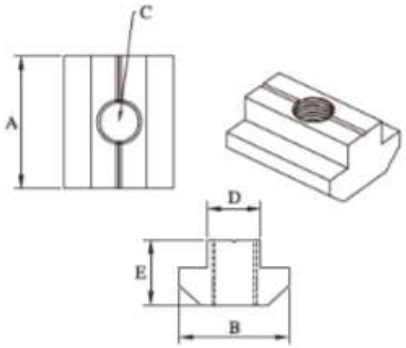

Al SILVERWICH ANODIZING

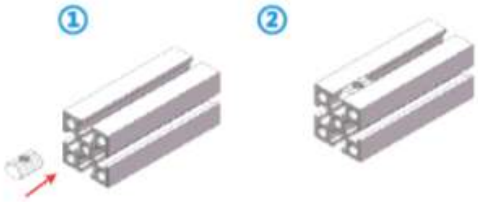

Part No	A	B	C	D	E	kg	Compatibility Code
5178	18	15.5	M5	7.8	8	0.004	OB30
5179			M6			0.004	
5180			M8			0.004	
5181	20	19.5	M5	7.8	9.5	0.008	OB40
5182			M6			0.008	
5183			M8			0.008	
5492	20	19.6	M6	9.8	9.2	0.007	OB45
5493			M8			0.006	
5494			M10			0.006	

Al SILVERWICH ANODIZING

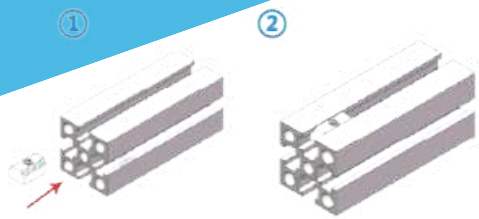

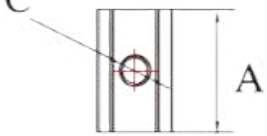

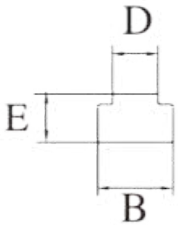

Part No	A	B	C	D	E	kg	Compatibility Code
5495	16	10	M4	6	6.5	0.003	GB30
5496			M5			0.002	
5497			M6			0.002	
5498	20	13	M5	8	9.2	0.006	GB40
5499			M6			0.005	
5500			M8			0.005	

STEEL, ZINC-PLATED, SELF ALIGNING

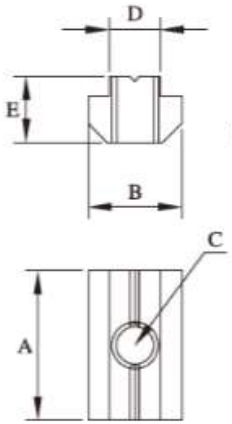

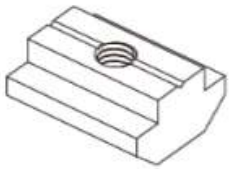

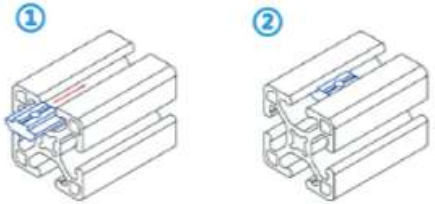

Part No	A	B	C	D	E	kg	Compatibility Code
5218	16	10	M4	5.5	7	0.007	GB30
5276			M5				
5277			M6				
5467	20	13.5	M4	7.8	9.5	0.013	GB40
5282			M5				
5279			M6				
5235			M8				

STEEL, ZINC-PLATED, SELF ALIGNING

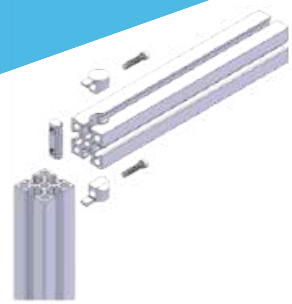

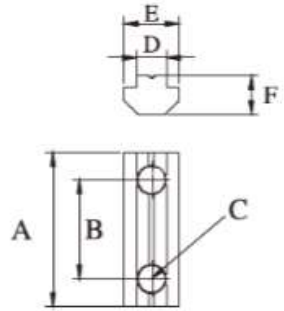

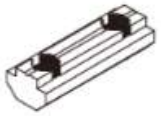

Part No	A	B	C	D	E	F	kg	Compatibility Code
5459	28	18	M6	5.5	10	7	0.010	GB30–18
5460	38	24	M8	7.8	13.5	9.5	0.022	GB40–24
5461	58	48	M6	5.5	10	7	0.022	GB3060–48
5462	78	64	M8	7.8	13.5	9.5	0.045	GB4080–64

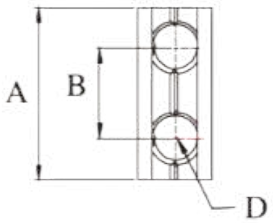

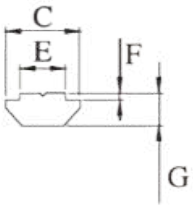

STEEL, ZINC-PLATED, SELF ALIGNING

Part No	A	B	C	D	E	F	G	kg	Compatibility Code
5451	23	12.1	9.8	M6	6	1	4.5	0.004	OB25–12.1
5452	48	37.1	9.8	M6	6	1	4.5	0.011	OB2550–37.1
5453	28	18	15.8	M6	8	2	6	0.013	OB30–18
5454	58	48	15.8	M6	8	2	6	0.025	OB3060–48
5455	38	24	18	M8	8	2.3	7.8	0.026	OB40–24
5456	78	64	18	M8	8	2.3	7.8	0.053	OB4080–64
5457	43	29	18	M8	10	3	9.3	0.036	OB45–29
5458	88	74	18	M8	10	3	9.3	0.079	OB4590–74

STEEL, ZINC-PLATED, SELF ALIGNING

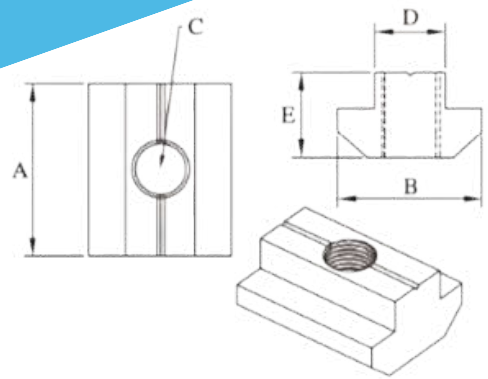

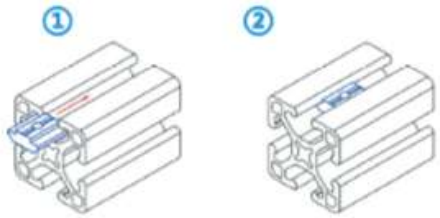

Part No	A	B	C	D	E	kg	Compatibility Code
5199	10	9.8	M4	5.8	5	0.002	OB20
5270			M5			0.002	
5271			M6			0.002	
5184	16	15.5	M4	7.8	6	0.008	OB30
5066			M5			0.008	
5067			M6			0.008	
5068			M8			0.008	
5185	20	18	M4	7.8	9.5	0.019	OB40
5069			M5			0.019	
5070			M6			0.019	
5071			M8			0.019	
5186	20	19.5	M4	9.8	10.5	0.021	OB45
5072			M5			0.021	
5073			M6			0.021	
5074			M8			0.021	
5075			M10			0.021	
5333	18	18	M4	9.8	9	0.016	OB45D
5334			M5			0.016	
5335			M6			0.016	
5336			M8			0.016	
5337			M10			0.016	

SLIDE-IN ECONOMY T-NUTS

STEEL, ZINC PLATED, SELF ALIGNING

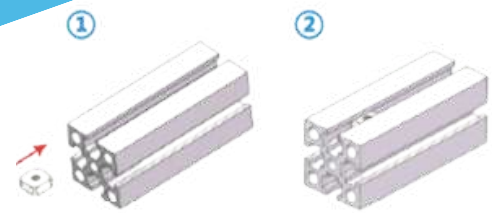

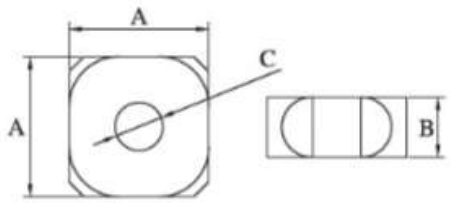

Part No	A	B	C	kg	Compatibility Code
5238	10	4.8	M4	0.003	30
5236			M5	0.003	
5272			M6	0.003	
5273	14	6	M5	0.007	40
5274			M6	0.007	
5275			M8	0.007	

DROP-IN T-NUTS

STEEL, ZINC PLATED, SELF ALIGNING

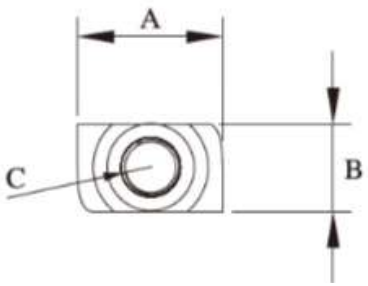

Part No	A	B	C	kg	Compatibility Code
5034	10	6	M4	0.002	GB30
5035			M5	0.002	
5470	14	8	M4	0.002	GB40
5036			M5	0.003	
5037			M6	0.003	

SLIDE-IN ECONOMY T-NUTS

STEEL, ZINC PLATED, SELF ALIGNING

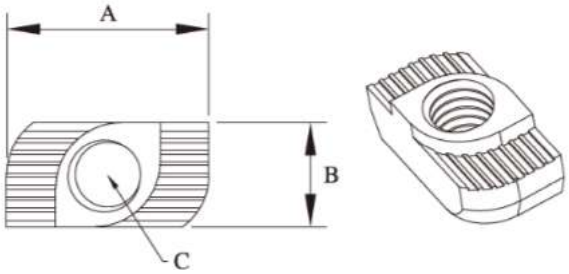

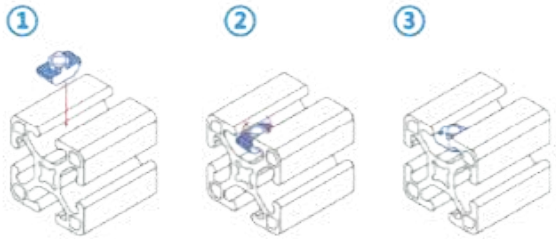

Part No	A	B	C	kg	Compatibility Code
5000	10.5	6	M3	0.002	OB20
5001			M4	0.002	
5002			M5	0.002	
5003			10–32	0.002	
5004	15.5	8	M4	0.004	OB30
5005			M5	0.004	
5006			M6	0.004	
5007			10–32	0.004	
5008			1/4–20	0.004	
5009	19.5	8	M4	0.006	OB40
5010			M5	0.006	
5011			M6	0.006	
5012			10–32	0.006	
5013			1/4–20	0.006	
5014	20	10	M8	0.007	
5015	20	10	M4	0.008	OB45
5016			M5	0.008	
5017			M6	0.008	
5018			M8	0.008	
5019			10–32	0.008	
5020			1/4–20	0.008	
5021			5/16–18	0.008	

ROLL-IN T-NUTS WITH BALL SPRING

STEEL, NICKED PLATED, SELF ALIGNING

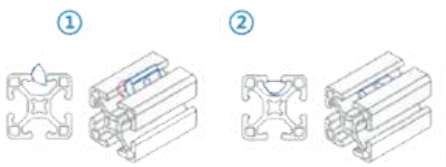

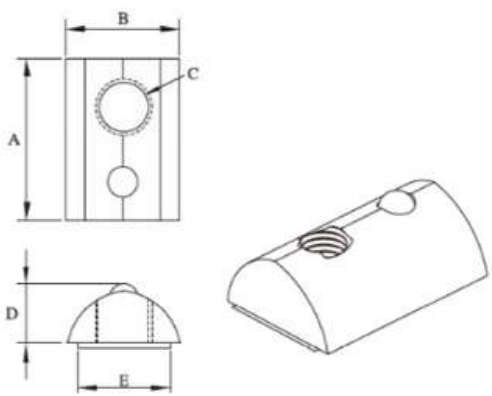

Part No	A	B	C	D	E	kg	Compatibility Code
5046	12	7.8	M4	4.8	6	0.004	OB20
5047			M5			0.004	
5435	13	9.5	M4	5.2	6	0.004	OB25
5424			M5			0.004	
5437			M6			0.004	
5388	21	13	M4	7.8	8	0.008	OB30
5048			M5			0.008	
5049			M6			0.008	
5050			M8			0.008	
5051			10–32			0.008	
5052			1/4–20			0.008	
5389	23	13.8	M4	8.8	8	0.011	OB40
5053			M5			0.011	
5054			M6			0.011	
5055			M8			0.011	
5056			10–32			0.011	
5057			1/4–20			0.011	
5058			5/16–18			0.011	
5390	23	16	M4	9.8	10	0.015	OB45
5059			M5			0.015	
5060			M6			0.015	
5061			M8			0.015	
5062			M10			0.015	
5063			10–32			0.015	
5064			1/4–20			0.015	
5065			5/16–18			0.015	

ROLL-IN T-NUTS WITH BALL SPRING

STEEL, NICKED PLATED, SELF ALIGNING

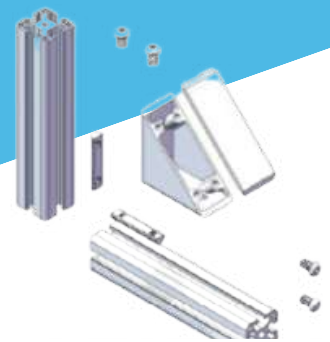

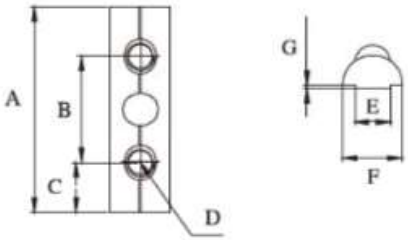

/Part No	A	B	C	D	E	F	G	kg	Compatibility Code
5438	26	15	5.5	M4	5	8.4	0.5	0.015	OB2040
5466				M5				0.015	
5440	44	30	7	M5	7.8	11.2	0.5	0.021	OB3060
5441				M6				0.021	
5476	58	40	9	M6	7.8	12.6	0.5	0.027	OB4080
5445				M8				0.027	
5449	63	45	9	M8	10	12.6	1.5	0.035	OB4590
5477				M10				0.034	

STEEL, NICKED PLATED, SELF ALIGNING

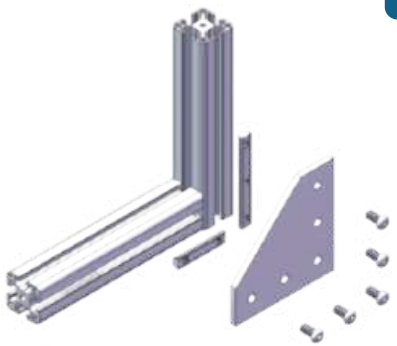

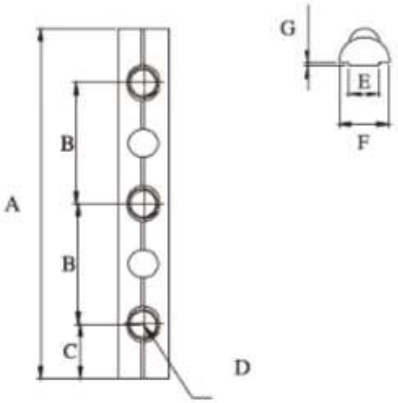

/Part No	A	B	C	D	E	F	G	kg	Compatibility Code
5439	56	20	8	M5	5	8.4	0.5	0.022	OB2060
5442	78	30	9	M6	7.8	11.2	0.5	0.031	OB3090
5446	98	40	9	M8	7.8	12.6	0.5	0.042	OB40120
5450	108	45	9	M8	10	12.6	1.5	0.062	OB45135

STEEL, NICKED PLATED, SELF ALIGNING

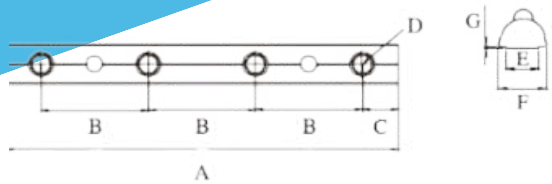

Part No	A	B	C	D	E	F	G	kg	Compatibility Code
5443	108	30	9	M6	7.8	11.2	0.5	0.041	OB30120
5447	138	40	9	M8	7.8	12.6	0.5	0.060	OB40160

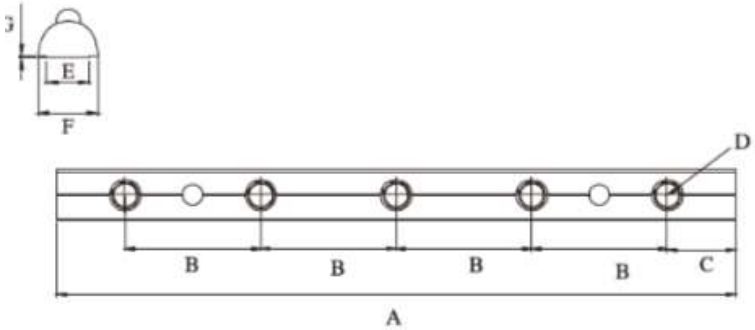

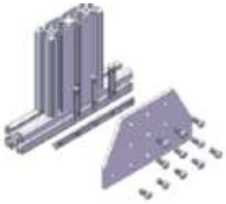

Part No	A	B	C	D	E	F	G	kg	Compatibility Code
5444	138	30	9	M6	7.8	11.2	0.5	0.055	OB30160
5448	178	40	9	M8	7.8	12.6	0.5	0.078	OB40180

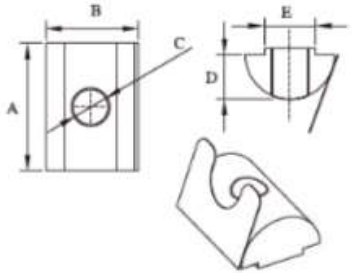

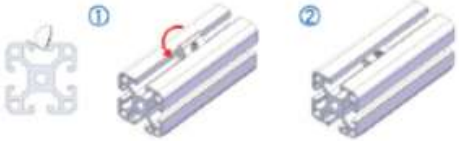

Part No	A	B	C	D	E	kg	Compatibility Code
5257	20	14	M4	7	8	0.01	40
5258			M5				
5259			M6				
5260			M8				
5290			1/4–20				
5281			5/16–18				

DROP-IN T-NUTS

STEEL, ZINC PLATED, SELF ALIGNING

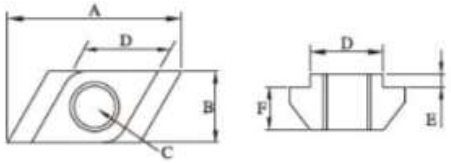

Part No	A	B	C	D	E	F	kg	Compatibility Code
5301	14.2	5.8	M4	6	1	3.5	0.002	20
5302			M5				0.002	
5303	22.4	7.8	M4	8	2	4	0.006	30
5304			M5				0.006	
5305			M6				0.006	
5306	25.4	7.8	M4	8	2.7	6	0.008	40
5307			M5				0.008	
5308			M6				0.008	
5309	26.4	9.7	M5	10	3	6.3	0.010	45
5310			M6				0.010	
5311			M8				0.010	

DIAMOND SHAPED NUTS

STEEL, ZINC PLATED, SELF ALIGNING

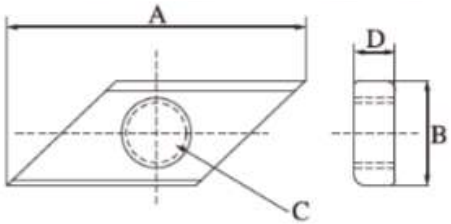

Part No	A	B	C	D	kg	Compatibility Code
5191	21	8.5	M4	4	0.003	30
5192	21	8.5	M5	4	0.003	
5193	21	8.5	M6	4	0.003	
5194	30	10.5	M4	4	0.005	40
5195	30	10.5	M5	4	0.005	
5196	30	10.5	M6	4	0.005	
5197	30	10.5	M8	4	0.005	

ROLL-IN T-NUTS

STEEL, NICKEL PLATED, SELF ALIGNING

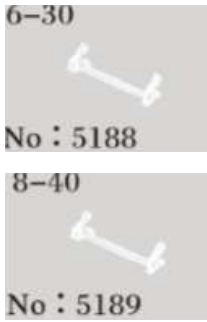

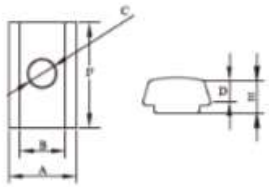

Part No	A	B	C	D	E	F	kg	Compatibility Code
5200	9.4	6	M4	4.1	5.6	16	0.005	30
5201			M5				0.005	
5202			M6				0.005	
5203	12	8	M4	5.9	7.4	20	0.009	40
5204			M5				0.009	
5205			M6				0.009	
5206			M8				0.009	

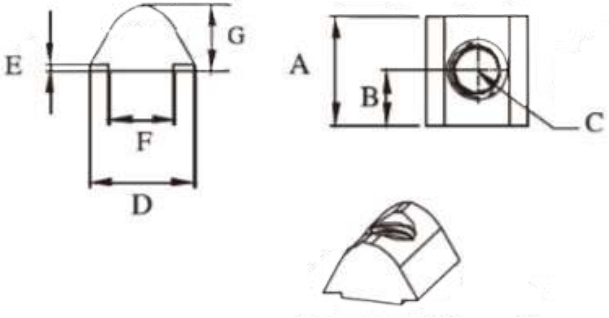

STEEL, ZINC PLATED, SELF ALIGNING

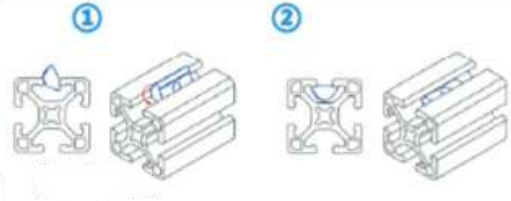

Part No	A	B	C	D	E	F	G	kg	Compatibility Code
5407	10	5	M4	8.4	0.5	5	4.8	0.003	OB20
5408			M5					0.002	
5409	10	5	M4	9.5	0.5	6	5.8	0.003	OB25
5410			M5					0.002	
5411			M6					0.002	
5412	16	8	M4	11.5	0.5	8	6.8	0.007	OB30
5413			M5					0.007	
5414			M6					0.007	
5415			M8					0.007	
5416	18	9	M5	13.3	0.5	8	7.4	0.010	OB40
5417			M6					0.010	
5418			M8					0.010	
5419	18	9	M5	15.3	0.5	10	8.1	0.014	OB45
5420			M6					0.014	
5421			M8					0.014	

STEEL, NICKEL PLATED, SELF ALIGNING

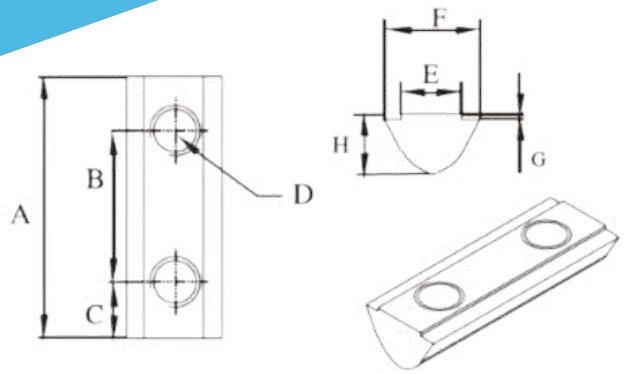

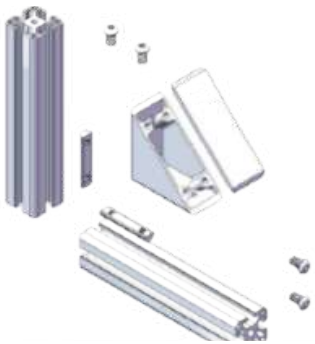

Part No	A	B	C	D	E	F	G	H	kg	Compatibility Code
5422	26	15	5.5	M4	5	8.4	0.5	4.8	0.015	OB2040
5481				M5					0.015	
5478	44	30	7	M5	7.8	11.2	0.5	6.7	0.018	OB3060
5425				M6					0.017	
5479	58	40	9	M6	7.8	12.6	0.5	7.3	0.027	OB4080
5429				M8					0.027	
5433	63	45	9	M8	10	12.6	1.5	8	0.036	OB4590
5480				M10					0.033	

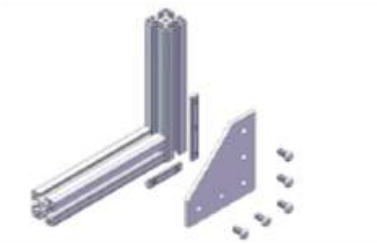

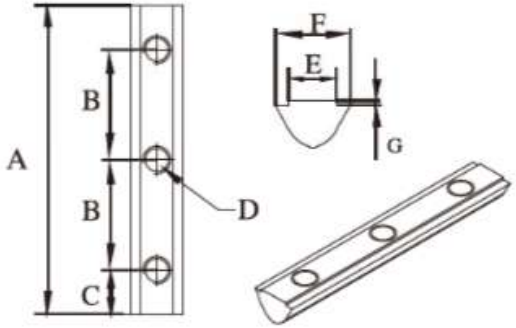

Part No	A	B	C	D	E	F	G	kg	Compatibility Code
5423	56	20	8	M5	5	8.4	0.5	0.022	OB2060
5426	78	30	9	M6	7.8	11.2	0.5	0.031	OB3090
5430	98	40	9	M8	7.8	12.6	0.5	0.042	OB40120
5434	108	45	9	M8	10	12.6	1.5	0.062	OB45135

STEEL, NICKEL PLATED, SELF ALIGNING

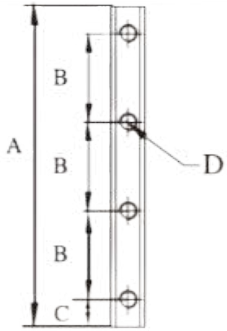

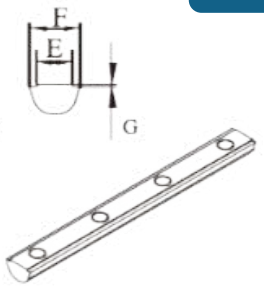

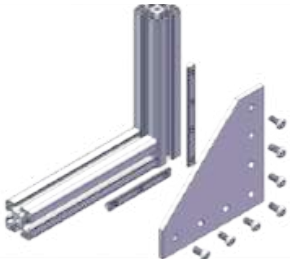

Part No	A	B	C	D	E	F	G	kg	Compatibility Code
5427	108	30	9	M6	7.8	11.2	0.5	0.041	OB30120
5431	138	40	9	M8	7.8	12.6	0.5	0.060	OB40160

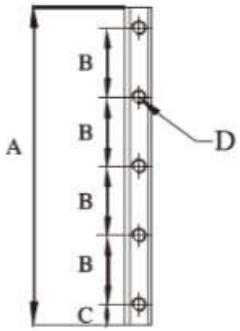

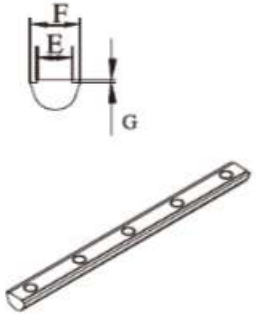

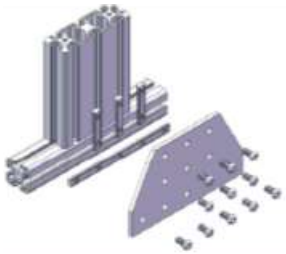

Part No	A	B	C	D	E	F	G	kg	Compatibility Code
5428	138	30	9	M6	7.8	11.2	0.5	0.055	OB30160
5432	178	40	9	M8	7.8	12.6	0.5	0.079	OB40180

FLANED NUTS

STEEL, ZINC PLATED, SELF ALIGNING

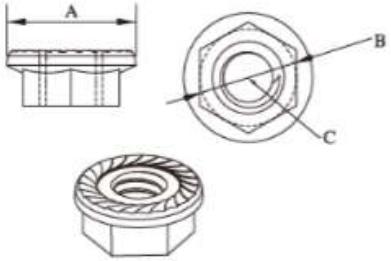

Part No	A	B	C	kg
5391	10.3	7.9	M5	0.003
5076	13	9.8	M6	0.004
5077	17	12.8	M8	0.006
5166	19	13.8	M10	0.008

HEX NUT

STEEL, NICKEL PLATED, SELF ALIGNING

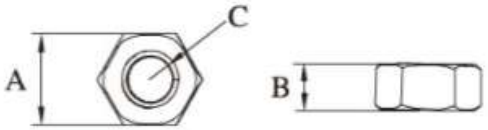

Part No	A	B	C	kg
5501	9.8	5	M6	0.002
5483–ZT8	12.7	6.8	M8	0.005

SELF-HOLD NUT

STEEL, NICKEL PLATED, SELF ALIGNING

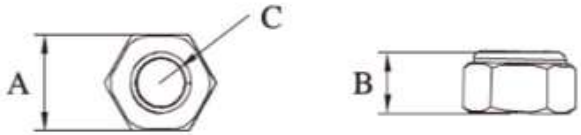

Part No	A	B	C	kg
5482–ZT8	10	6	M6	0.002
5485–ZT8	13	7.8	M8	0.005

THREADED INSERT

STEEL, ZINC PLATED, SELF ALIGNING

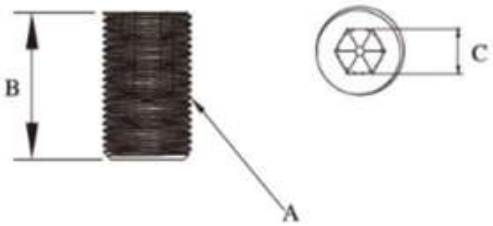

/Part No	A	B	C	kg
5296	M4	5	2	0.001
5371	M5	6	2.5	0.001
5078		8		0.001
5079	M6	8	3	0.002
5080		10		0.002
5159	M8	8	4	0.002
5081		10		0.003
5224		20		0.006
5484–ZT8		35		0.011
5485–ZT8		55		0.017

FLASH WASHERS

STEEL, NICKEL PLATED, SELF ALIGNING

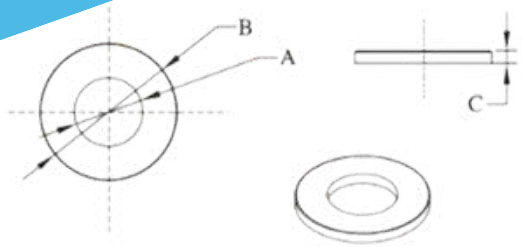

Part No	A	B	C	kg
5365	ϕ4.3	ϕ9	1	0.001
5041	ϕ6.3	ϕ12	1	0.001
ML-ZC1006	ϕ6.5	ϕ12	1	0.001
5266	ϕ8.5	ϕ17	1.5	0.001
ML-ZC1007	ϕ8.5	ϕ16	1.5	0.001
ML-ZC1008	ϕ8.5	ϕ24	1.5	0.001

SPRING WASHERS

STEEL, NICKEL PLATED, SELF ALIGNING

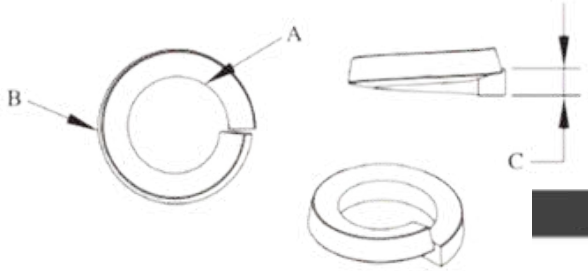

Part No	A	B	C	kg
5264	ϕ6.5	ϕ10.8	2	0.001
5265	ϕ8.3	ϕ13.4	2.5	0.001

CHECK WASHERS

STEEL, ZINC PLATED, SELF ALIGNING

Part No	A	B	C	kg
ML-C1009	ϕ10	ϕ6.5	1.4	0.001
ML-C1010	ϕ13	ϕ8.5	1.6	0.001

ALUMINIUM WASHER

AL NATURAL FINISH

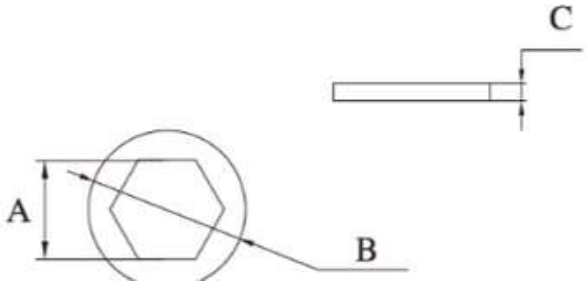

Part No	A	B	C	kg
ML–C1001	19.2	ϕ30	1	0.001
ML–C1002	19.2	ϕ30	2	0.002
ML–C1003	19.2	ϕ30	5	0.005
ML–C1004	19.2	ϕ30	10	0.010
ML–C1005	19.2	ϕ30	50	0.052

PULL RING

STEEL, ZINC PLATED, SELF ALIGNING

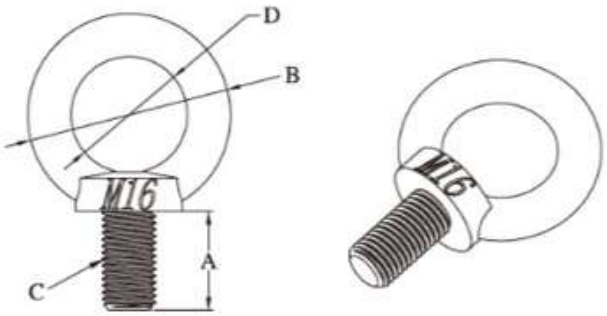

Part No	A	B	C	D	kg
5208	14	36	M8	20	0.050
5209	16	51	M12	27	0.152
5210	30	61	M16	35	0.241

PLASTIC STANDARD HINGE

FIBERGLASS-REINFORCED BLACK NYLON W/STAINLESS STEEL PIN

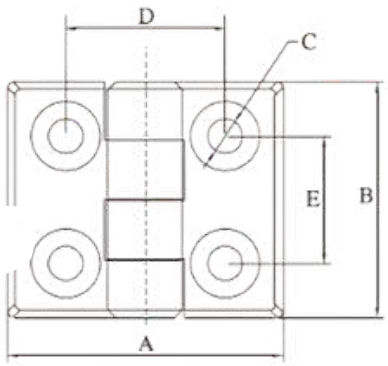

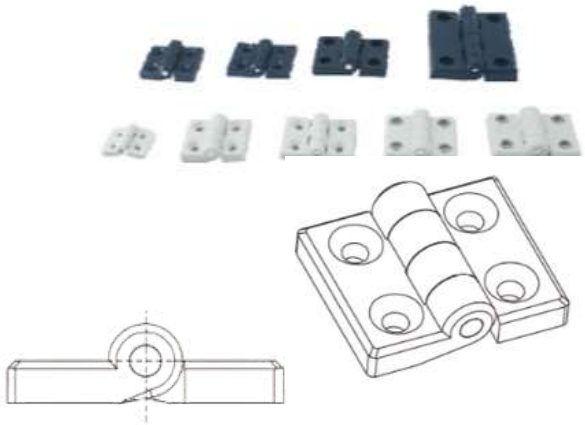

Part No	QTY	Description
5365 & 5338	4	M4 × 8 mm FHSCS & Econ T-Nut
5088 & 5343	4	M6 × 16mm FHSCS & Econ T-Nut
5087 & 5135	4	M6 × 12mm FHSCS & Econ T-Nut
5373 & 5359	4	M6 × 14mm SHCS & Econ T-Nut
5370 & 5335	4	M8 × 14mm SHCS & Econ T-Nut
5370 & 5336	4	M8 × 14mm SHCS & Econ T-Nut

/Part No	A	B	C	D	E	kg	Compatibility Code
3012	39	30	ϕ4.5	20	14	0.008	20A
3012-B	39	30	ϕ4.5	20	14	0.008	20A灰白
3013	52	45	ϕ6.5	30	23.5	0.030	30A
3013-B	52	45	ϕ6.5	30	23.5	0.030	30A灰白
3015	60	45	ϕ6.5	35	24.5	0.032	3040A
3015-B	60	45	ϕ6.5	35	24.5	0.032	3040A灰白
3014	60	50	ϕ6.5/ϕ8.5	40	30	0.039	40A
3014-B	60	50	ϕ6.5/ϕ8.5	40	30	0.039	40A灰白
3016	70	50	ϕ6.5	45	30	0.047	45A
3016-B	70	50	ϕ6.5	45	30	0.047	45A灰白
3017	80	102	ϕ9.5	50	72.5	0.110	50A
3017-B	80	102	ϕ9.5	50	72.5	0.110	50A灰白

PLASTIC LIFT-OFF HINGE

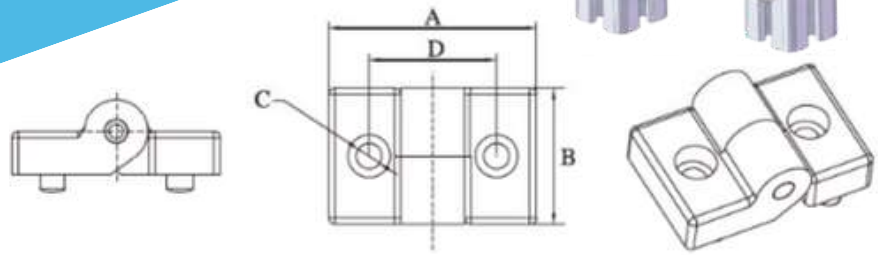

FIBERGLASS-REINFORCED BLACK NYLON W/STAINLESS STEEL PIN

Part No	QTY	Description
5147 & 5135	2	M6 × 12mm SHCS & Econ T-Nut
5148 & 5141	2	M6 × 16mm SHCS & Econ T-Nut

Part No	A	B	C	D	kg	Compatibility Code
3018	48	33	ϕ6.5	30	0.028	3030AL
3075	48	33	ϕ6.5	30	0.028	3030AR
3019	63	33	ϕ6.5	40	0.032	4040AL
3076	63	33	ϕ6.5	40	0.032	4040AR
3020	55.5	33	ϕ6.5	35	0.030	3040AL
3019	55.5	33	ϕ6.5	35	0.030	3040AR

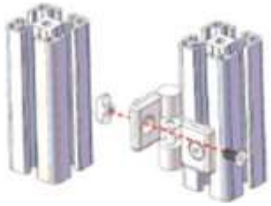

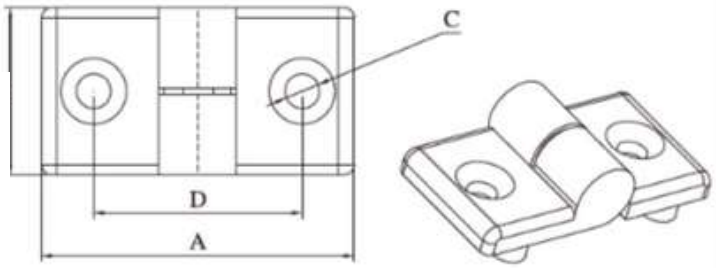

FIBERGLASS-REINFORCED BLACK NYLON W/STAINLESS STEEL PIN

Part No	QTY	Description
5087 & 5135	2	M6 × 12mm FHSCS & Econ T-Nut
5088 & 5343	2	M6 × 16mm FHSCS & Econ T-Nut

Part No	A	B	C	D	kg	Compatibility Code
3077	50	32	ϕ6	30	0.018	30BL
3078	50	32	ϕ6	30	0.018	30BR
3079	60	32	ϕ6	40	0.021	40BL
3086	60	32	ϕ6	40	0.021	40BR

FIBERGLASS-REINFORCED BLACK NYLON

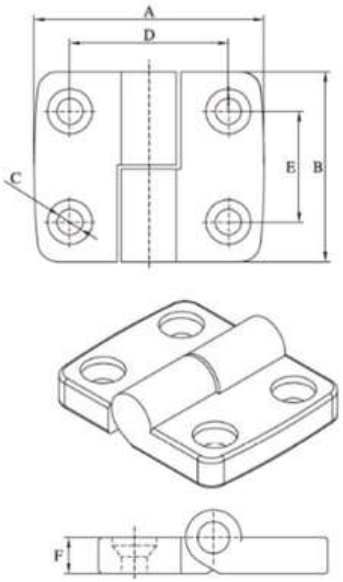

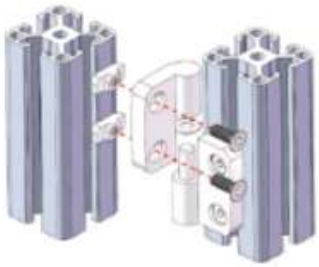

Part No	QTY	Description
5088 & 5343	4	M6 × 16mm FHSCS & Econ T–Nut
5088 & 5343	4	M6 × 16mm FHSCS & Econ T–Nut
5088 & 5359	4	M6 × 16mm FHSCS & Econ T–Nut
5088 & 5359	4	M6 × 16mm FHSCS & Econ T–Nut
5088& 5335	4	M6 × 16mm FHSCS & Econ T–Nut
5088& 5335	4	M6 × 16mm FHSCS & Econ T–Nut
5087&5135	4	M6 × 12mm FHSCS & Econ T–Nut
5087&5135	4	M6 × 12mm FHSCS & Econ T–Nut
5087&5135	4	M6 × 12mm FHSCS & Econ T–Nut
5087&5135	4	M6 × 12mm FHSCS & Econ T–Nut
5088&5344	4	M6 × 16mm FHSCS & Econ T–Nut
5088&5344	4	M6 × 16mm FHSCS & Econ T–Nut

R L

Part No	A	B	C	D	E	F	kg	Compatibility Code
3179	51	48	ϕ6.5	30	28	9	0.032	30CL
3180	51	48	ϕ6.5	30	28	9	0.032	30CR
3181	58	48	ϕ6.5	40	28	9	0.036	40CL
3182	58	48	ϕ6.5	40	28	9	0.036	40CR
3183	75.5	48	ϕ6.5	45	28	9	0.043	45CL
3184	75.5	48	ϕ6.5	45	28	9	0.043	45CR
3185	55	48	ϕ6.5	35	28	9	0.034	3040CL
3186	55	48	ϕ6.5	35	28	9	0.034	3040CR
3187	63.3	48	ϕ6.5	37.5	28	9	0.038	3045CL
3188	63.3	48	ϕ6.5	37.5	28	9	0.038	3045CR
3189	66.8	48	ϕ6.5	42.5	28	9	0.039	4045CL
3190	66.8	48	ϕ6.5	42.5	28	9	0.039	4045CR

ADJUSTABLE HINGES

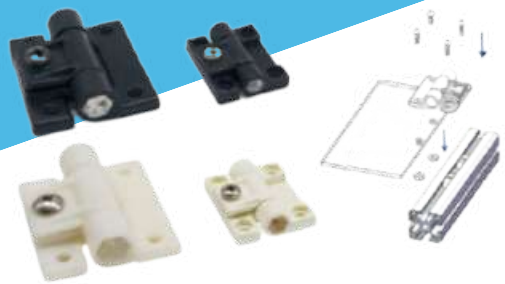

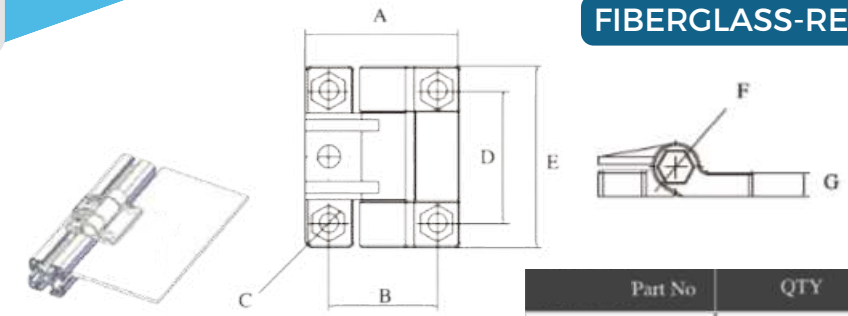

FIBERGLASS-REINFORCED BLACK NYLON

Part No	QTY	Description
5160&5338	2	M4 × 8mm BHSCS & Econ T-Nut
5100&5359	2	M6 × 16mm BHSCS & Econ T-Nut

Part No	A	B	C	D	E	F	G	kg	Compatibility Code
3223	35.5	25.4	ϕ4.5	31	42.4	ϕ11	5.5	0.014	25Q
3224	57	38.1	ϕ7	47.5	64	ϕ18.5	5.2	0.041	40Q

STANDARD HINGE

DIE-CAST ALUMINIUM, SILVER POWDER COATING

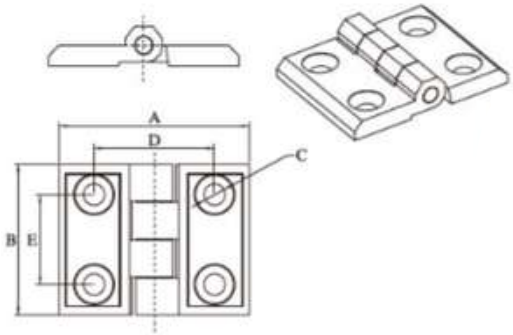

Part No	QTY	Description
5227 & 5339	4	M5 × 8 mm FHSCS & Econ T-Nut
5087 & 5343	4	M6 × 12mm FHSCS & Econ T-Nut
5088 & 5359	4	M6 × 16mm FHSCS & Econ T-Nut
5088 & 5335	4	M6 × 16mm FHSCS & Econ T-Nut
5087 & 5135	4	M6 × 12mm FHSCS & Econ T-Nut

Part No	A	B	C	D	E	kg	Compatibility Code
3024	39	40	5.5	20	25	0.025	20A
3025	53	50	ϕ6.5	30	30	0.041	30A
3026	63	50	ϕ6.5	40	30	0.055	40A
3027	68	50	ϕ6.5	45	30	0.068	45A
3028	57	50	ϕ6.5	35	30	0.048	3040A
3029	65	50	ϕ6.5	42.5	30	0.062	4045A

DIE-CAST ZINC, BLACK POWDER COATING

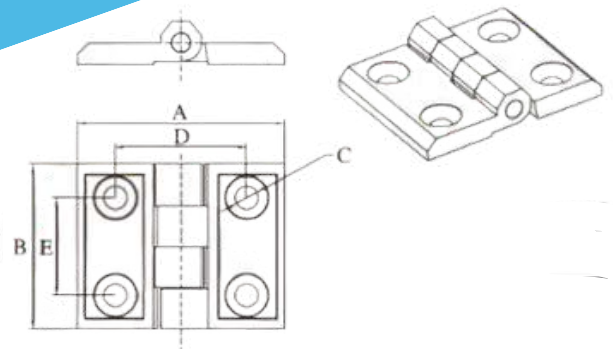

Part No	QTY	Description
5227 & 5339	4	M5 × 10mm FHSCS & Econ T–Nut
5087 & 5343	4	M6 × 12mm FHSCS & Econ T–Nut
5088 & 5359	4	M6 × 16mm FHSCS & Econ T–Nut
5087 & 5141	4	M6 × 12mm FHSCS & Econ T–Nut
5088 & 5335	4	M6 × 16mm FHSCS & Econ T–Nut

Part No	A	B	C	D	E	kg	Compatibility Code
3044	39	40	ϕ5.5	20	25	0.048	20B
3045	53	50	ϕ6.5	30	30	0.1	30B
3046	63	50	ϕ6.5	40	30	0.117	40B
3047	57	50	ϕ6.5	35	30	0.105	3040B
3080	68	50	ϕ6.5	45	30	0.117	45B
3082	65	50	ϕ6.5	42.5	30	0.118	4045B

DIE-CAST AL, SILVER POWDER COATING

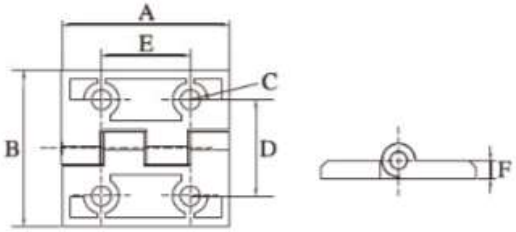

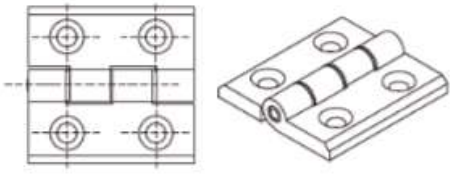

Part No	QTY	Description
5088 & 5343	4	M6 × 16mm FHSCS & Econ T–Nut
5088 & 5343	4	M6 × 16mm FHSCS & Econ T–Nut
5088 & 5135	4	M6 × 16mm FHSCS & Econ T–Nut

Part No	A	B	C	D	E	F	kg	Compatibility Code
3070	55	59	ϕ7	31	31.7	6.5	0.057	30D
3071	72	59	ϕ7	41	31.7	6.5	0.071	40D
3072	63	59	ϕ7	36.5	31.7	6.5	0.064	3040D

DOUBLE DOOR HINGE

AL CNC MANUFACTURE, SILVERY WHITE ANODIZING

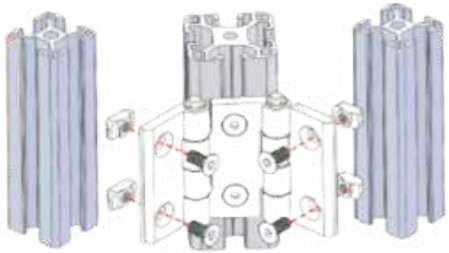

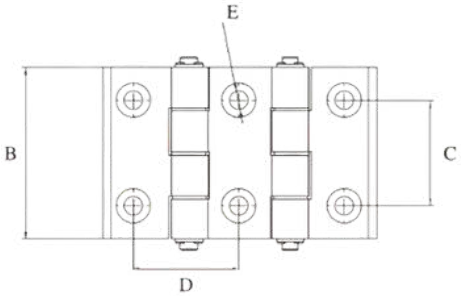

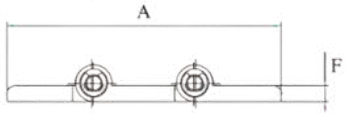

Part No	QTY	Description
5088&5011	2	M6 × 16mm FHSCS & Drop-In T-Nut
5087&5006	4	M6 × 12mm FHSCS & Drop-In T-Nut

Part No	A	B	C	D	E	F	kg	Compatibility Code
3221	96.4	60	37	37.5	ϕ6.5	5.5	0.113	3535L

AL CNC MANUFACTURE, SILVERY WHITE ANODIZING

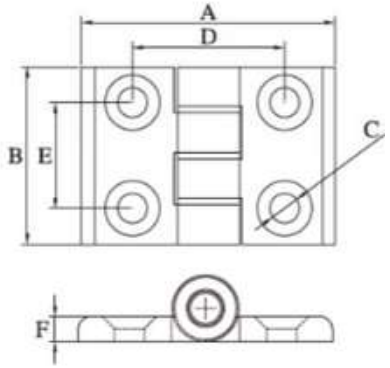

Part No	QTY	Description
5087&5343	4	M6 × 12mm FHSCS & Econ T-Nut
5088&5359	4	M6 × 16mm FHSCS & Econ T-Nut
5087&5343 5088&5359	2	M6 × 12mm FHSCS & Econ T-Nut M6 × 16mm FHSCS & Econ T-Nut
5088&5359	4	M6 × 16mm FHSCS & Econ T-Nut
5088&5359	4	M6 × 16mm FHSCS & Econ T-Nut
5088&5359	4	M6 × 16mm FHSCS & Econ T-Nut

Part No	A	B	C	D	E	F	kg	Compatibility Code
3177	60	42	ϕ7	31	25	6	0.057	30K
3178	60	42	ϕ7	41	25	6	0.057	40K
3191	60	42	ϕ7	36	25	6	0.057	3040K
3192	74.5	42	ϕ7	43.5	25	7	0.071	4045K
3193	74.5	42	ϕ7	46	25	7	0.071	45K
3194	74.5	42	ϕ7	51	25	7	0.071	50K

STANDARD LIFT-OFF HINGES

AL CNC MANUFACTURE, SILVERY WHITE ANODIZING

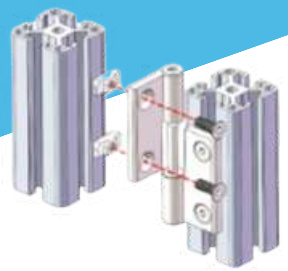

R

L

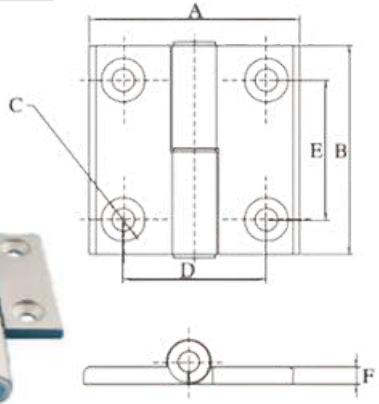

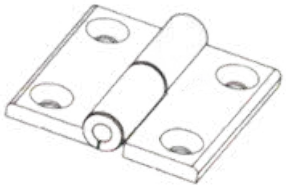

Part No	QTY	Description
5227 & 5339	4	M5 × 8mm FHSCS & Econ T-Nut
5087 & 5343	4	M6 × 12mm FHSCS & Econ T-Nut
5088 & 5359	4	M6 × 16mm FHSCS & Econ T-Nut
5374 & 5335	4	M6 × 16mm FHSCS & Econ T-Nut
5088 & 5141	4	M6 × 14mm FHSCS & Econ T-Nut

Part No	A	B	C	D	E	F	kg	Compatibility Code
3130	36	47	ϕ5.5	21	25	3.5	0.022	20F-L
3131	36	47	ϕ5.5	21	25	3.5	0.022	20F-R
3132	49.5	50	ϕ6.5	31	30	4.5	0.043	30F-L
3133	49.5	50	ϕ6.5	31	30	4.5	0.043	30F-R
3134	60	60	ϕ6.5	41	40	5.5	0.060	40F-L
3135	60	60	ϕ6.5	41	40	5.5	0.060	40F-R
3136	71	60	ϕ6.5	46	40	5.5	0.070	45F-L
3137	71	60	ϕ6.5	46	40	5.5	0.070	45F-R
3138	71	60	ϕ6.5	43.5	40	5.5	0.065	4045F-L
3139	71	60	ϕ6.5	43.5	40	5.5	0.065	4045F-R
3140	60	60	ϕ6.5	36	40	5.5	0.060	3040F-L
3141	60	60	ϕ6.5	36	40	5.5	0.060	3040F-R

AL CNC MANUFACTURE, SILVERY WHITE ANODIZING

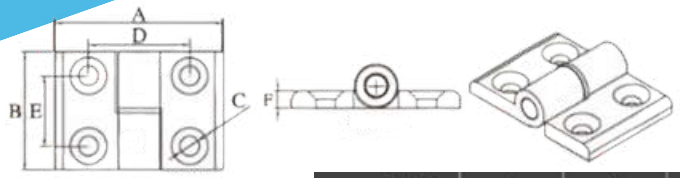

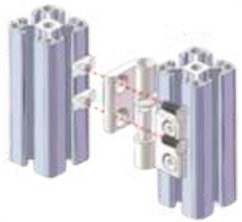

Part No	A	B	C	D	E	F	kg	Compatibility Code
3207	60	42	ϕ7	31	25	6	0.057	30ML
3208	60	42	ϕ7	31	25	6	0.057	30MR
3209	60	42	ϕ7	36	25	6	0.057	3040ML
3210	60	42	ϕ7	36	25	6	0.057	3040MR
3211	60	42	ϕ7	41	25	6	0.057	40ML
3212	60	42	ϕ7	41	25	6	0.057	40MR
3213	74.5	42	ϕ7	43.5	25	7	0.071	4045ML
3214	74.5	42	ϕ7	43.5	25	7	0.071	4045MR
3215	74.5	42	ϕ7	46	25	7	0.071	45ML
3216	74.5	42	ϕ7	46	25	7	0.071	45MR
3217	74.5	42	ϕ7	51	25	7	0.071	50ML
3218	74.5	42	ϕ7	51	25	7	0.071	50MR

STANDARD HINGE

AL CNC MANUFACTURE, SILVERY WHITE ANODIZING

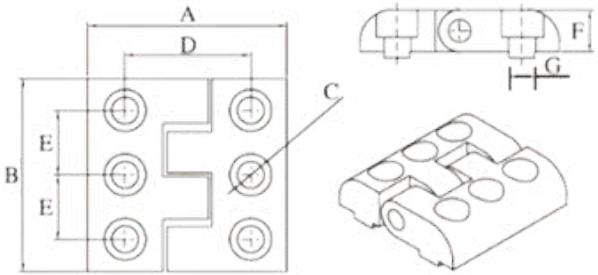

Part No	QTY	Description
5147 & 5193	6	M6 × 12mm SHCS & Diamond–Nuts
5110 & 5197	6	M8 × 16mm SHCS & Diamond–Nuts
5370 & 5197	6	M8 × 14 mm SHCS & Diamond–Nuts

Part No	A	B	C	D	E	F	G	kg	Compatibility Code
3120	50	50	ϕ6.3	30	15	13	8	0.072	30H
3121	62	60	ϕ8.3	40	20	13	8	0.11	40H
3122	74	70	ϕ8.3	45	22.5	13	10	0.16	45H

AL CNC MANUFACTURE, SILVERY WHITE ANODIZING

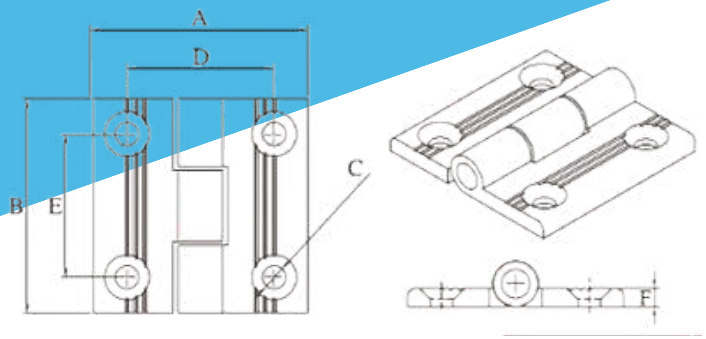

Part No	QTY	Description
5087 & 5343	4	M6×12mm FHSCS & Econ T-Nut
5088 & 5335	4	M6×16mm FHSCS & Econ T-Nut
5088 & 5335	4	M6×16mm FHSCS & Econ T-Nut

Part No	A	B	C	D	E	F	kg	Compatibility Code
3123	60	50	ϕ6.5	31	30	5	0.052	30N
3124	60	60	ϕ6.5	41	40	5	0.063	40N
3125	60	60	ϕ6.5	36	35	5	0.063	3040N

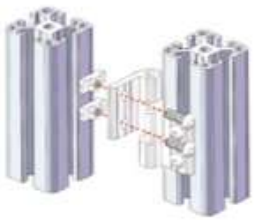

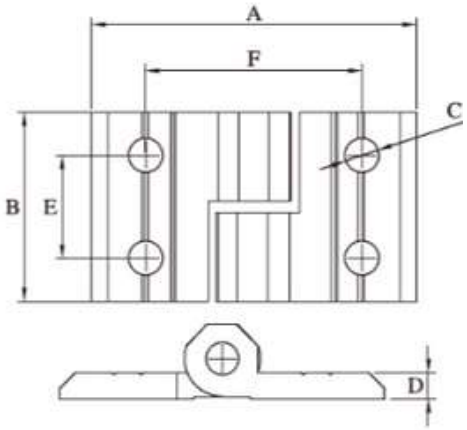

Part No	QTY	Description
5099 & 5343	4	M6×12mm BHSCS & Econ T-Nut
5100 & 5335	4	M6×16mm BHSCS & Econ T-Nut
5100 & 5335	4	M6×16mm BHSCS & Econ T-Nut

Part No	A	B	C	D	E	F	kg	Compatibility Code
3126	60	35	ϕ6.3	5	19	31	0.037	30GL
3127	60	35	ϕ6.3	5	19	31	0.037	30GR
3128	60	35	ϕ6.3	5	19	41	0.037	40GL
3129	60	35	ϕ6.3	5	19	41	0.037	40GR
3195	60	35	ϕ6.3	5	19	36	0.037	3040GL
3196	60	35	ϕ6.3	5	19	36	0.037	3040GR

STANDARD LIFT-OFF HINGES

AL CNC MANUFACTURE, SILVERY WHITE ANODIZING

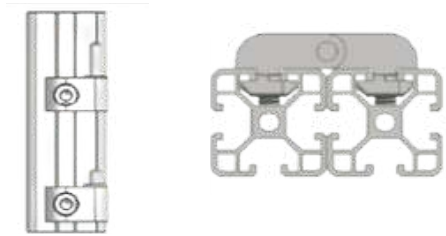

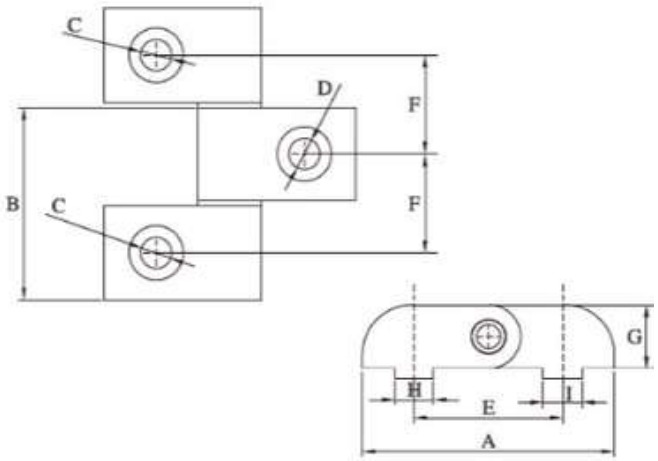

Part No	A	B	C	D	E	F	G	H	I	kg	Compatibility Code
3103	51	39	ϕ6.3	ϕ6.3	30	20	13	8	8	0.079	3030EL
3104										0.079	3030ER
3105										0.061	3030E
3109	57		ϕ6.3	ϕ8.3	35			8	8	0.085	3040EL
3110										0.085	3040ER
3116										0.64	3040E
3197	63		ϕ6.3	ϕ8.3	37.5			8	10	0.093	3045EL
3143										0.093	3045ER
3144										0.068	3045E
3106	63		ϕ8.3	ϕ8.3	40			8	8	0.09	4040EL
3107										0.09	4040ER
3108										0.07	4040E
3198	57		ϕ8.3	ϕ6.3	35			8	8	0.084	4030EL
3199										0.084	4030ER
3200										0.067	4030E
3114	69		ϕ8.3	ϕ8.3	42.5			8	10	0.098	4045EL
3115										0.098	4045ER
3117										0.074	4045E
3111	75		ϕ8.3	ϕ8.3	45			10	10	0.107	4545EL
3112										0.107	4545ER
3113										0.082	4545E
3201	63		ϕ8.3	ϕ6.3	37.5			10	8	0.093	4530EL
3202										0.093	4530ER
3203										0.075	4530E
3204	69		ϕ8.3	ϕ8.3	42.5			10	8	0.099	4540EL
3205										0.099	4540ER
3206										0.078	4540E

STANDARD HINGE

DIE-CAST ZINC, SILVER POWDER COATING

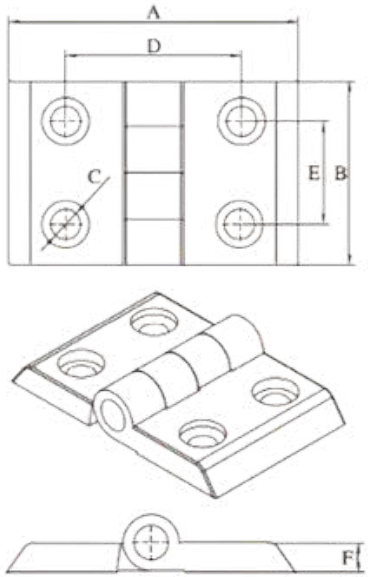

Part No	QTY	Description
5084& 5338	4	M4 × 10mm FHSCS & Econ T–Nut
5088& 5343	4	M6 × 16mm FHSCS & Econ T–Nut
5088& 5343	4	M6 × 16mm FHSCS & Econ T–Nut
5088& 5343	4	M6 × 16mm FHSCS & Econ T–Nut
5087& 5135	4	M6 × 12mm FHSCS & Econ T–Nut
5087& 5135	4	M6 × 12mm FHSCS & Econ T–Nut
5088& 5141	4	M6 × 16mm FHSCS & Econ T–Nut

订货号/Part No	A	B	C	D	E	F	kg	Compatibility Code
3149	40	30	ϕ5	21	14	4.3	0.022	20I
3150	57.4	43	ϕ7	31	24	7	0.073	30I
3151	67.4	43	ϕ7	41	24	7	0.081	40I
3152	72.4	43	ϕ7	46	24	7	0.85	45I
3153	62.4	43	ϕ7	36	24	7	0.077	3040I
3154	64.9	43	ϕ7	38.5	24	7	0.080	3045I
3155	69.9	43	ϕ7	43.5	24	7	0.083	4045I

LIFT-OFF HINGE

DIE-CAST ZINC, SILVER POWDER COATING

R L

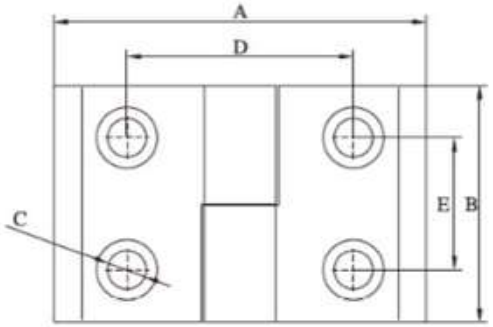

Part No	QTY	Description
5084&5131	4	M4×10mm FHSCS & Econ T-Nut
5084&5131	4	M4×10mm FHSCS & Econ T-Nut
5088&5343	4	M6×12mm FHSCS & Econ T-Nut
5088&5343	4	M6×12mm FHSCS & Econ T-Nut
5088&5359	4	M6×16mm FHSCS & Econ T-Nut
5088&5359	4	M6×16mm FHSCS & Econ T-Nut
5088&5335	4	M6×16mm FHSCS & Slide-In-Nuts
5088&5335	4	M6×16mm FHSCS & Slide-In-Nuts
5087&5135	4	M6×12mm FHSCS & Econ T-Nut
5087&5135	4	M6×12mm FHSCS & Econ T-Nut
5087&5135	4	M6×12mm FHSCS & Econ T-Nut
5087&5135	4	M6×12mm FHSCS & Econ T-Nut
5088&5141	4	M6×16mm FHSCS & Econ T-Nut
5088&5141	4	M6×16mm FHSCS & Econ T-Nut

Part No	A	B	C	D	E	F	kg	Compatibility Code
3156	40	30	ϕ5	21	14	4.3	0.022	20JL
3157	40	30	ϕ5	21	14	4.3	0.022	20JR
3158	57.4	43	ϕ7	31	24	7	0.073	30JL
3159	57.4	43	ϕ7	31	24	7	0.073	30JR
3160	67.4	43	ϕ7	41	24	7	0.081	40JL
3161	67.4	43	ϕ7	41	24	7	0.081	40JR
3162	72.4	43	ϕ7	46	24	7	0.085	45JL
3163	72.4	43	ϕ7	46	24	7	0.085	45JR
3164	62.4	43	ϕ7	36	24	7	0.077	3040JL
3165	62.4	43	ϕ7	36	24	7	0.077	3040JR
3166	64.9	43	ϕ7	38.5	24	7	0.079	3045JL
3167	64.9	43	ϕ7	38.5	24	7	0.079	3045JR
3168	69.9	43	ϕ7	43.5	24	7	0.083	4045JL
3169	69.9	43	ϕ7	43.5	24	7	0.083	4045JR

PLASTIC DOOR HANDLES

VERY DURABLE-MADE OF HIGH-STRENGTH BLACK POLYCARBONATE

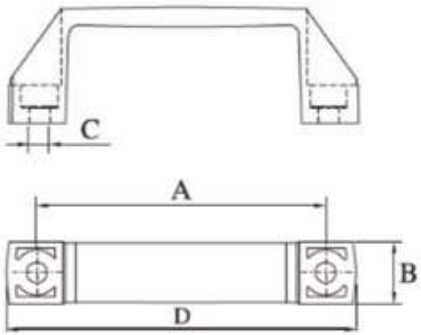

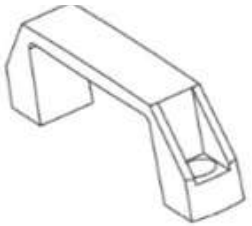

Part No	A	B	C	D	kg	Compatibility Code
3009	85	20	ϕ6.5	109	0.027	90
3036	113	25	ϕ6.5	135	0.049	115
3010	118	25	ϕ8.5	140	0.0425	120
3074	163	26	ϕ6.5	193.5	0.070	160
3011	178	28.5	ϕ8.5	200	0.079	180

ALUMINIUM CABINET HANDLES

DIE-CAST ALUMINIUM, BLACK POWDER COAT
SILVER POWDER COAT

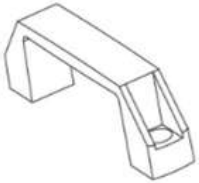

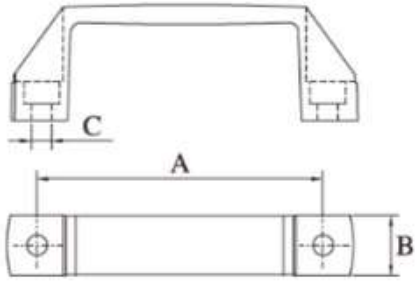

Part No	A	B	C	kg	Compatibility Code
3021	90	19.5	ϕ6.5	0.047	90
3037	90	19.5	ϕ6.5	0.047	90
3022	120	25.5	ϕ8.5	0.083	120
3038	120	25.5	ϕ8.5	0.083	120
3023	180	28.5	ϕ8.5	0.157	180
3039	180	28.5	ϕ8.5	0.157	180

LOCKING HANDLE

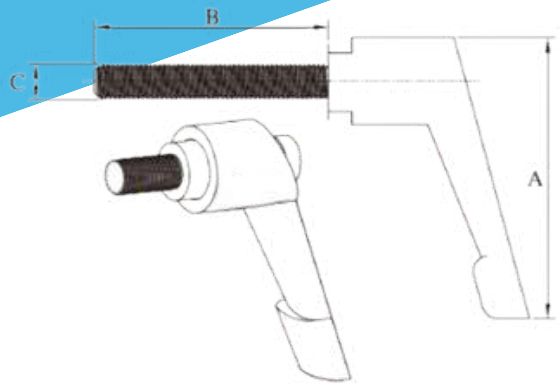

Part No	A	B	C	kg	Compatibility Code
7144	48	12	M6	0.034	30
7141	48	30	M6	0.0371	
7139	72	16	M8	0.0876	40
7140	72	40	M8	0.0795	
7177	72	45	M8	0.09	45

FENCE CONNECTOR

DIE-CAST ALUMINIUM, SILVER POWDER COATING

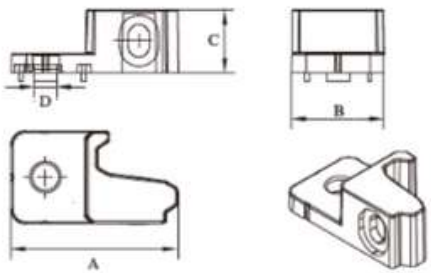

A

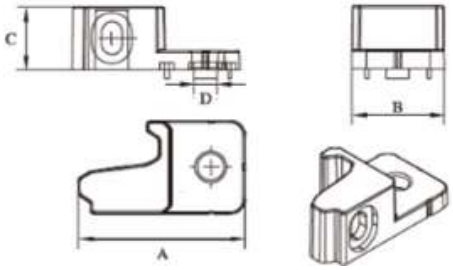

B

Part No	A	B	C	D	kg
7227	53.5	29.7	20	7.5	0.059
7228	53.5	29.7	20	7.5	0.059

DEADBOLT LATCH

AL CNC MANUFACTURE, SILVERY WHITE ANNODIZING

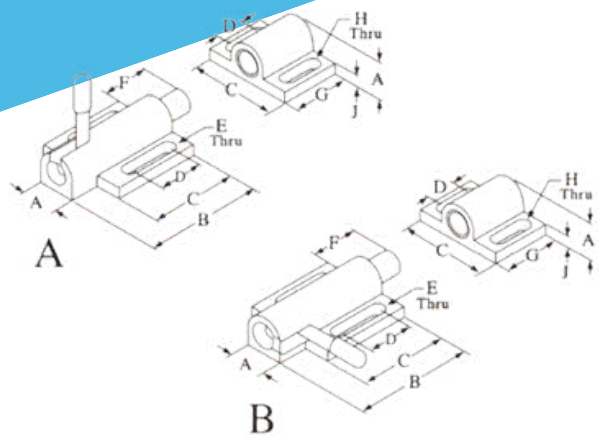

Part No	A	B	C	D	E	F	G	H	J	kg	Compatibility Code
3118	15.9	51	38	12.9	6.3	14	25	6.3	4.5	0.07	40A
3119	15.9	51	38	12.9	6.3	14	25	6.3	4.5	0.07	40B

ROTARY LATCH

304 STAINLESS STEEL MATERIAL
SUITABLE FOR ALL PROFILES TO USE

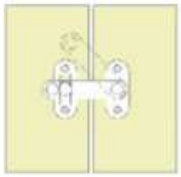

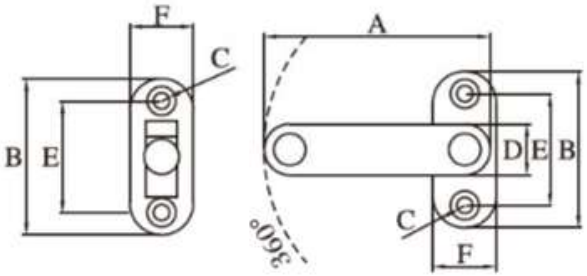

Part No	A	B	C	D	E	F	kg	Compatibility Code
3174	61	49	ϕ5.5	16	35	20	0.048	30A
3175	71	49	ϕ5.5	16	35	20	0.050	40A
3176	81	49	ϕ5.5	16	35	20	0.051	45A

COPPER BALL CATCH

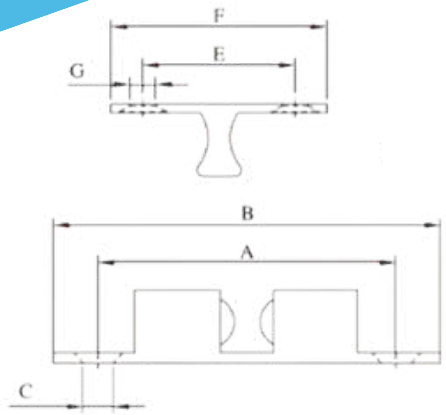

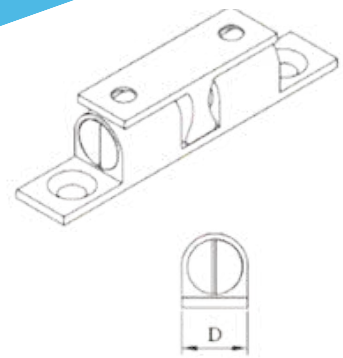

COOPER CNC PROCESSING
STAINLESS STEEL BALL

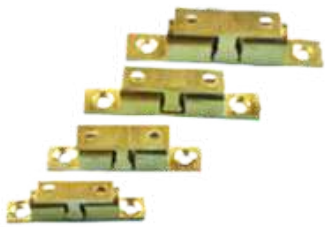

Part No	A	B	C	D	E	F	G	kg	Compatibility Code
3145	34	43	ϕ4	8	16	23.7	ϕ3.5	0.014	20A
3146	39	50	ϕ4	10.4	20	28	ϕ3.5	0.021	30A
3147	46	59.8	ϕ4.6	10.4	23.5	33.3	ϕ4	0.03	40A
3148	54	68.3	ϕ4.6	12.2	26	37	ϕ4	0.049	45A

NYLON MAGNETIC CATCH

25 & 40 SERIES COMPATIBLE
MADE OF MOLDED BLACK FIBERGLASS-REINFORCES NYLON
QUICK LATCHING METHOD FOR LIGHTWEIGHT PLASTIC PANEL DOORS

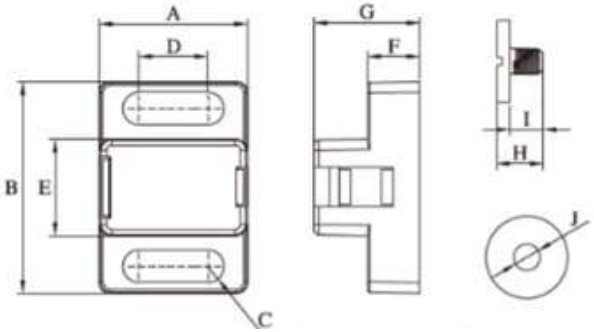

Part No	Series	QTY	Description
5148 & 5135	30	2	M6 × 16mm SHCS & Econ T–nut
5109 & 5141	40	2	M6 × 20mm SHCS & Econ T–nut

Part No	A	B	C	D	E	F	G	H	I	J	kg	Compatibility Code
3170	28.2	40	R3.1	13.1	18.4	10	20.2	8.9	6.4	M5	0.033	A

25 & 40 SERIES COMPATIBLE
BODY OF LATCH IS MADE OF MOLDED BLACK FIBERGLASS REINFORCED NYLON
QUICK LATCHING METHOD FOR LIGHTWEIGTH PLASTIC PANEL DOORS
ZINC-PLATED STEEL BALL CAN LATCH INTO TOP OR FRONT OF CATCH

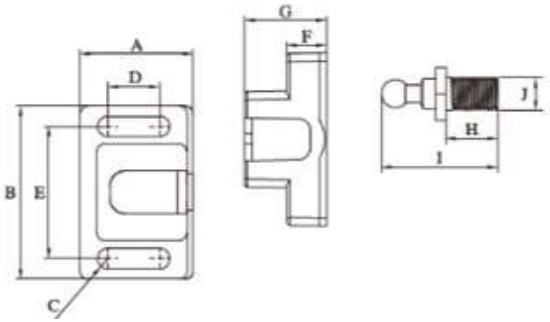

Part No	Series	QTY	Description
5148 & 5135	30	2	M6 × 16mm SHCS & Econ T–nut
5109 & 5141	40	2	M6 × 20mm SHCS & Econ T–nut

/Part No	A	B	C	D	E	F	G	H	I	J	kg	Compatibility Code
3171	28.2	43.3	R2.6	12.8	33	10	20.4	13	29	M8	0.023	A

DOUBLE BALL CATCH

FIBERGLASS-REINFORCED NYLON, BLACK
STAINLESS STEEL BALL

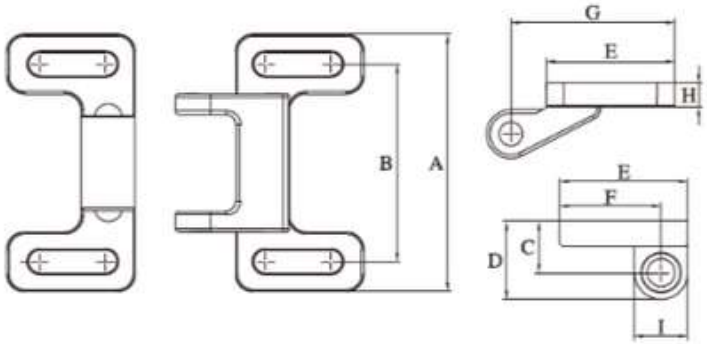

Part No	Series	QTY	Description
5148 & 5135	40	4	M6 × 16mm SHCS & Econ T–nut
5109 & 5141	45	4	M6 × 20mm SHCS & Econ T–nut

Part No	A	B	C	D	E	F	G	H	I	kg	Compatibility Code
3172	74.2	57	14.8	22.5	37	29.3	47.4	7	15.4	0.039	B

STEEL MAGNETIC CATCH

25 & 40 SERIES COMPATIBLE
STEEL PLATE PUNCHING MOLDING
THERE IS A STRONG AD SORPTION CAPACITY AND CAN BE FREELY ADJUSTED DISTANCE

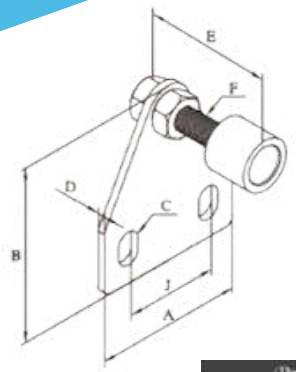

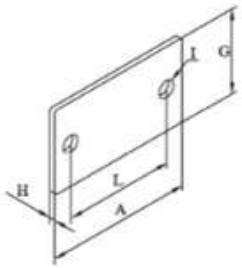

Part No	A	B	C	D	E	F	G	H	I	J	L	kg	Compatibility Code
3173	40	47.5	R3	2	37.3	M6	23	1.5	ϕ4.5	25	30	0.052	A

BOLD THE DOOR RESISTANCE

25 & 40 SERIES COMPATIBLE
COLD HEADING MOLDING
THERE IS A STRONG AD SORPTION CAPACITY AND CAN BE FREELY ADJUSTED DISTANCE

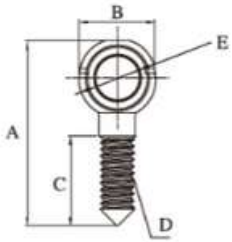

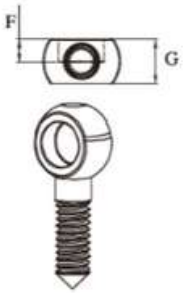

Part No	A	B	C	D	E	F	G	kg
5468	41	ϕ17	20	M6	ϕ10.1	5.2	10	0.0196
5469	41	ϕ17	20	M8	ϕ10.1	5.2	10	0.022

PANEL MOUNT BLOCK 1/4 TURN

FIBERGLASS-REINFORCED NYLON TRANSPARENT

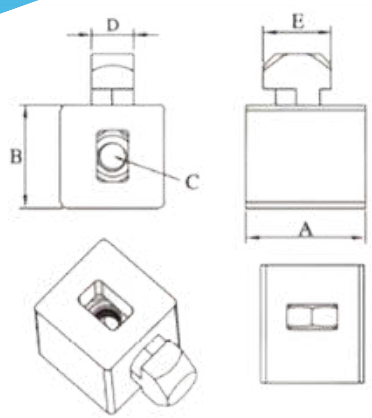

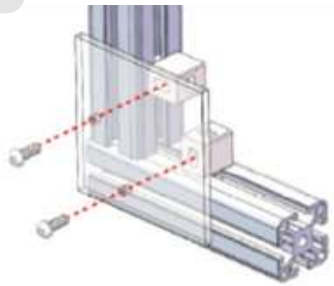

Part No	A	B	C	D	E	kg	Compatibility Code
3007	23	20	M6	8	13.5	0.01	30–8
3030	23	20	M6	8	13.5	0.01	30–8(黑)
3008	23	22.5	M6	8	16.5	0.011	40–8
3031	23	22.5	M6	8	16.5	0.011	40–8(黑)
3084	28	23	M6	8	16.8	0.012	45–10
3085	28	23	M6	8	16.8	0.012	45–10(黑)

MOVING BLOCK

ONLY SUITABLE FOR 1530 ALUMINIUM PROFILE
THE COOPER ROLLER CON ROLL FREELY ON THE TRACK

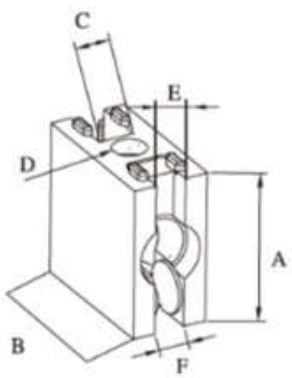

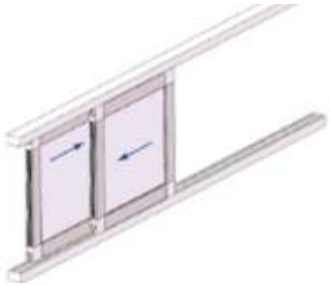

Part No	A	B	C	D	E	F	kg	Compatibility Code
3225	30	30	7	ϕ 6.5	6	4.2	0.023	1530A

TOP HANGER BLOCK

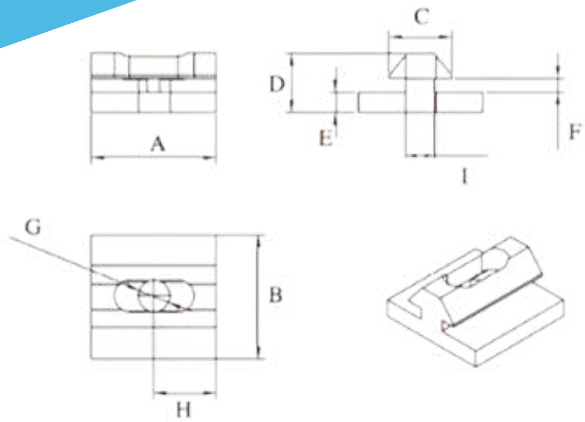

Part No	A	B	C	D	E	F	G	H	I	kg	Compatibility Code
2138	25	25	12.6	11.9	4	2.8	ϕ 6.3	12.5	5.8	0.008	25
2139	30	30	15	11.9	4	2.8	ϕ 8.3	15	7.6	0.012	30
2140	40	40	19	17.8	4	4.7	ϕ 8.3	20	7.6	0.036	40

MESH PANEL ECONOMY FASTENER

DIE-CAST ZINC, NATURAL FINISH

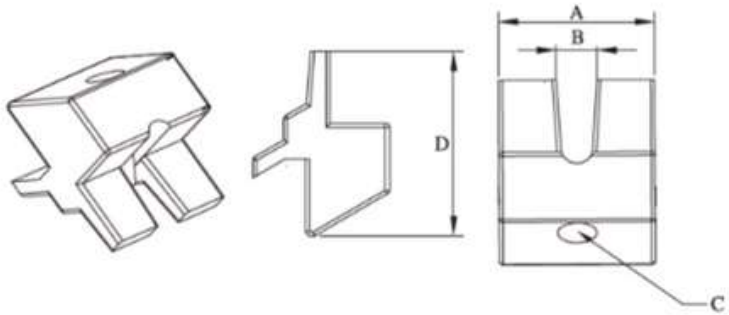

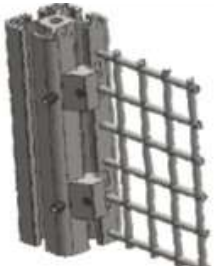

Part No	A	B	C	D	kg
7225	20	5.2	M5	24	0.016

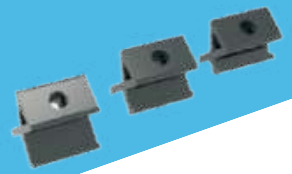

AL CNC MANUFACTURE, SIVERY WHITE ANODIZING

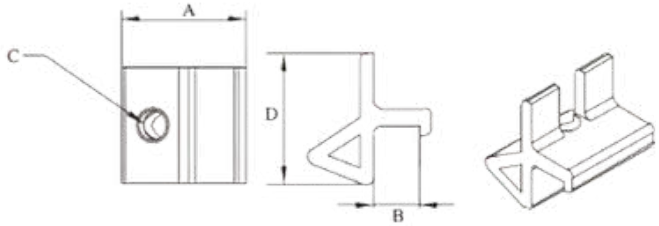

Part No	A	B	C	D	kg	Compatibility Code
7222	16	2.57	M5	16.7	0.013	30
7223	16	4.67	M5	18.9	0.014	40
7224	16	6.57	M5	21	0.014	45

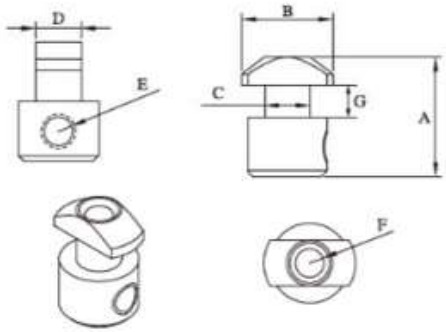

STEEL, ZINC-PLATED, SELF-ALIGNING

Part No	A	B	C	D	E	F	G	kg	Compatibility Code
7196	18	10.5	ϕ5.8	5.8	M6	4.5	3	0.013	20A
7197	20	16	ϕ7.8	7.8	M6	4.5	3	0.016	30A
7198	21	16	ϕ7.8	7.8	M6	5.4	5.5	0.014	40A
7199	23	19	ϕ9.8	9.8	M6	5.4	5.2	0.033	45A
7226	23	19	ϕ9.8	9.8	M6	5.4	6.2	0.030	45B

SINGLE PANEL RETAINERS

20, 30, 40 AND 45 SERIES COMPATIBLE
MADE OF 6061-t5 CLEAR ANODIZED ALUMINUM
STRONGEST METHOD FOR MOUNTING PANELS
SIMPLIFIES PANEL INSTALLATION AND REMOVAL

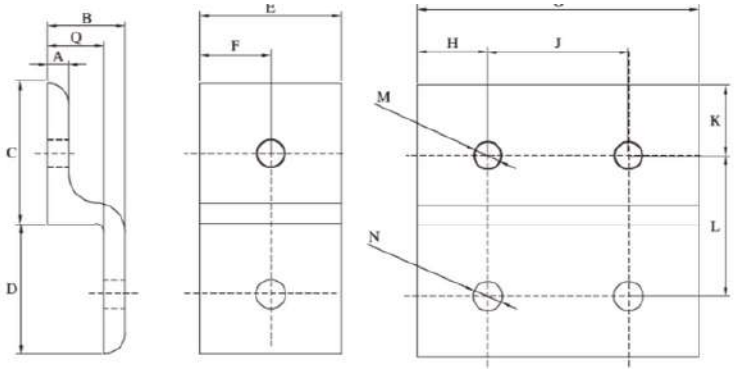

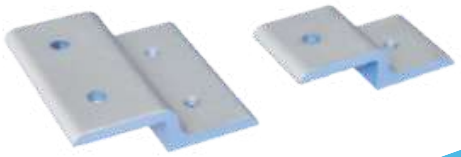

Part No	A	B	C	D	E	F	G	H	Q	J	K	L	M	N	kg	Compatibility Code
7145	3	10.2	20	19	20	10	–	–	7.2	–	10	20	M5	ϕ5.6	0.01	20A
7149	3	10.2	20	19	–	–	40	10	7.2	20	10	20	M5	ϕ5.6	0.015	20B
7146	4	14.6	30	28	30	15	–	–	10.6	–	15	30	M6	ϕ8.3	0.021	30A
7150	4	14.6	30	28	–	–	60	15	10.6	30	15	30	M6	ϕ8.3	0.042	30B
7147	6	22	40	37	40	20	–	–	16	–	20	40	M8	ϕ8.3	0.056	40A
7151	6	22	40	37	–	–	80	20	16	40	20	40	M8	ϕ8.3	0.120	40B
7148	6	23.3	45	42	45	22.5	–	–	17.3	–	22.5	45	M8	ϕ8.3	0.080	45A
7152	6	23.3	45	42	–	–	90	22.5	17.3	45	22.5	45	M8	ϕ8.3	0.150	45B

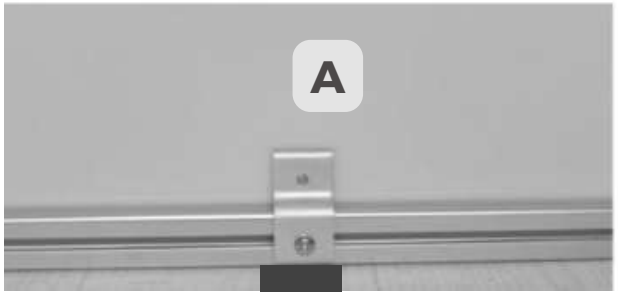

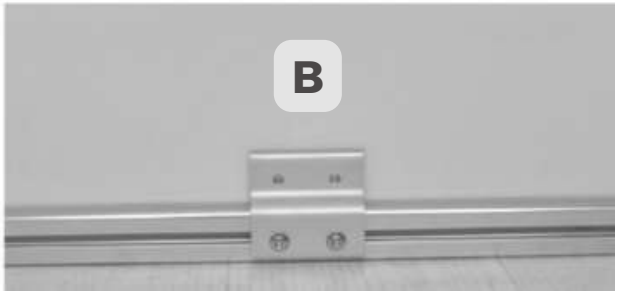

DOUBLE PANEL RETAINERS

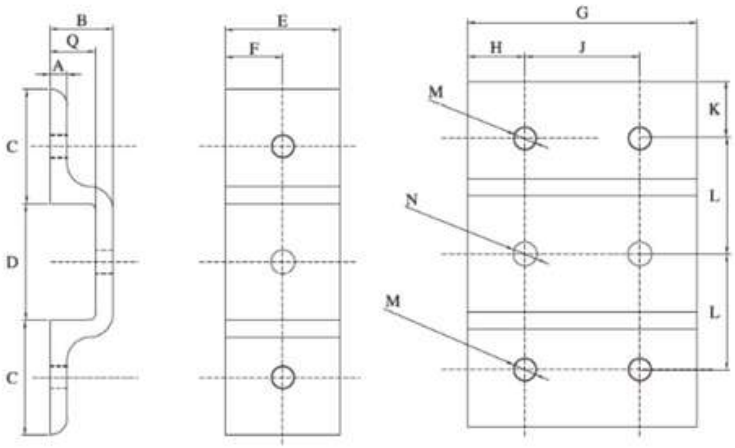

20, 30, 40 AND 45 SERIES COMPATIBLE
MADE OF 6061-t5 CLEAR ANODIZED ALUMINUM
STRONGEST WAY TO COST-EFFECTIVELY RETAIN
TWO PLASTIC PANELS SEPARATED BY A PROFILE
SIMPLIFIES PANEL INSTALLATION AND REMOVAL

Part No	A	B	C	D	E	F	G	H	Q	J	K	L	M	N	kg	Compatibility Code
7153	3	10.2	20	20.6	20	10	–	–	7.2	–	10	20.3	M5	ϕ5.5	0.020	20C
7157	3	10.2	20	20.6	–	–	40	10	7.2	20	10	20.3	M5	ϕ5.5	0.022	20D
7154	4	14.6	30	30.6	30	15	–	–	10.6	–	15	30.3	M6	ϕ8.3	0.034	30C
7158	4	14.6	30	30.6	–	–	60	15	10.6	30	15	30.3	M6	ϕ8.3	0.070	30D
7155	6	22	40	40.6	40	20	–	–	16	–	20	40.3	M8	ϕ8.3	0.10	40C
7159	6	22	40	40.6	–	–	80	20	16	40	20	40.3	M8	ϕ8.3	0.190	40D
7156	6	23.3	45	45.6	45	22.5	–	–	17.3	–	22.5	45.3	M8	ϕ8.3	0.120	45C
7160	6	23.3	45	45.6	–	–	90	22.5	17.3	45	22.5	45.3	M8	ϕ8.3	0.240	45D

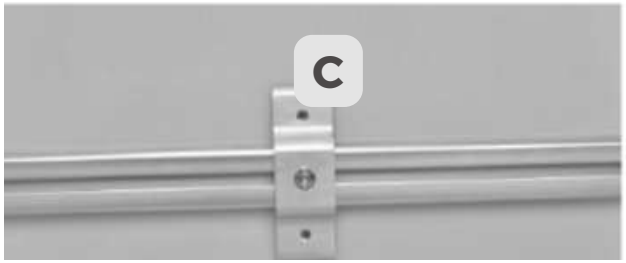

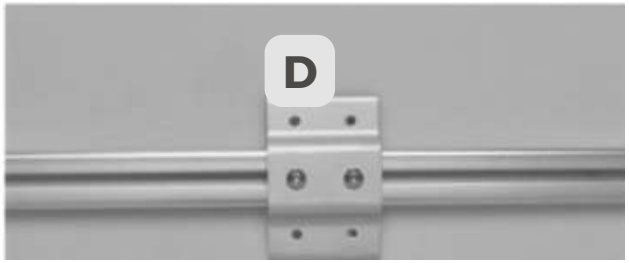

SINGLE MESH PANEL RETAINERS

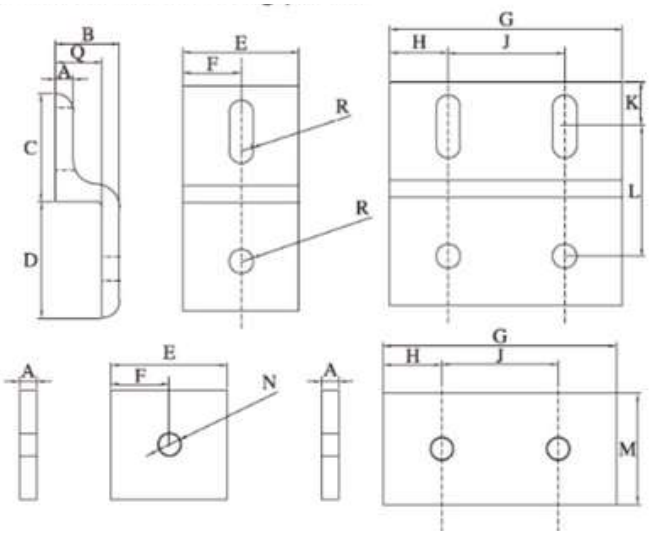

20, 30, 40 AND 45 SERIES COMPATIBLE
MADE OF 6061-t5 CLEAR ANODIZED ALUMINUM
STRONGEST MERHOD FOR MOUNTING WIRE MESH
SIMPLIFIES PANEL INSTALLATION AND REMOVAL
PANEL IS SECURED WHEN TIGHTENED BETWEEN RETAINER AND TREADED BACKING PLATE

Part No	A	B	C	D	E	F	G	H	I	J	K	L	M	N	R	kg	Compatibility Code
7161	3	10.2	20	19	20	10	–	–	7.2	–	8.5	22	18	M5	5.5	0.01	20E
7165	3	10.2	20	19	–	–	40	10	7.2	20	8.5	22	18	M5	5.5	0.021	20F
7162	4	14.6	30	28	30	15	–	–	10.6	–	13	32.5	28	M6	6.5	0.029	30E
7166	4	14.6	30	28	–	–	60	15	10.6	30	13	32.5	28	M6	6.5	0.057	30F
7163	6	22	40	37	40	20	–	–	16	–	15.6	44.6	38	M8	8.3	0.078	40E
7167	6	22	40	37	–	–	80	20	16	40	15.6	44.6	38	M8	8.3	0.16	40F
7164	6	23.3	45	42	45	22.5	–	–	17.3	–	20	48.5	42	M8	8.3	0.10	45E
7168	6	23.3	45	42	–	–	90	22.5	17.3	45	20	48.5	42	M8	8.3	0.20	45F

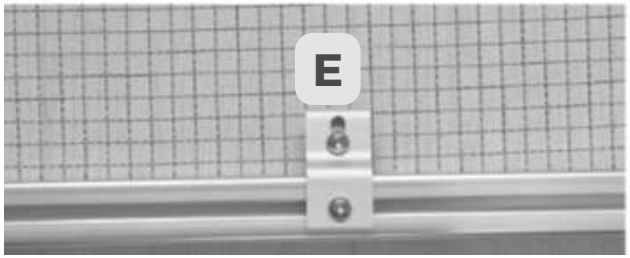

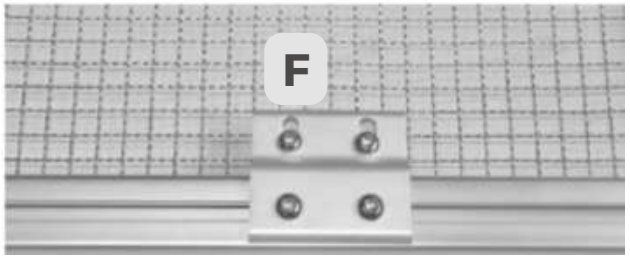

DOUBLE MESH PANEL RETAINERS

20, 30, 40 AND 45 SERIES COMPATIBLE
MADE OF 6061-t5 CLEAR ANODIZED ALUMINUM
PANEL IS SECURED WHEN TIGHTENED BETWEEN RETAINER AND TREADED BACKING PLATE
STRONGEST WAY TO COST-EFFECTIVELY RETAIN TWO WIRE MESH OR EXPANDED METAL PANELS SEPARED BY A PROFILE
SIMPLIFIES PANEL INSTALLATION AND REMOVAL

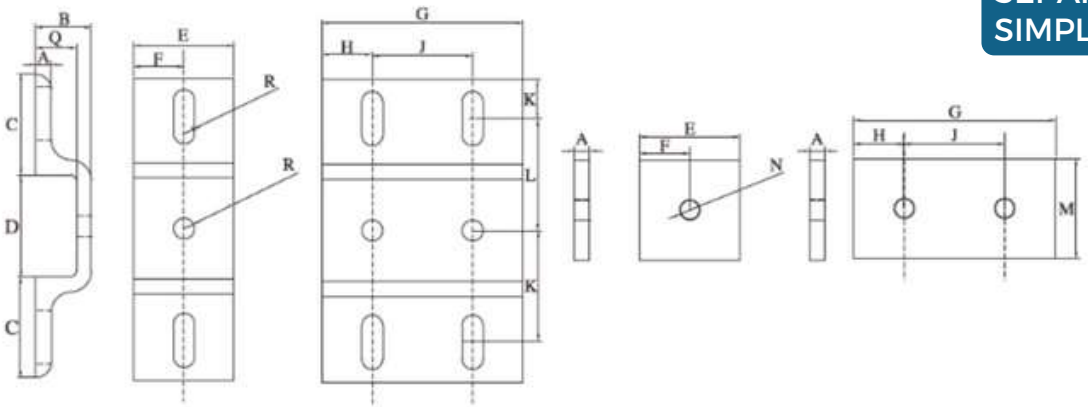

Part No	A	B	C	D	E	F	G	H	I	J	K	L	M	N	R	kg	Compatibility Code
7169	3	10.2	20	20.6	20	10	–	–	7.2	–	8.5	22	18	M5	5.5	0.018	20G
7173	3	10.2	20	20.6	–	–	40	10	7.2	20	8.5	22	18	M5	5.5	0.036	20H
7170	4	14.6	30	30.6	30	15	–	–	10.6	–	13	32.5	28	M6	6.5	0.051	30G
7174	4	14.6	30	30.6	–	–	60	15	10.6	30	13	32.5	28	M6	6.5	0.098	30H
7171	6	22	40	40.6	40	20	–	–	16	–	15.6	44.6	38	M8	8.3	0.14	40G
7175	6	22	40	40.6	–	–	80	20	16	40	15.6	44.6	38	M8	8.3	0.28	40H
7172	6	23.3	45	45.6	45	22.5	–	–	17.3	–	20	48.5	48	M8	8.3	0.173	45G
7176	6	23.3	45	45.6	–	–	90	22.5	17.3	45	20	48.5	48	M8	8.3	0.35	45H

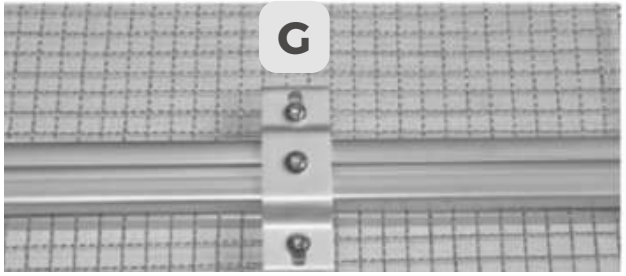

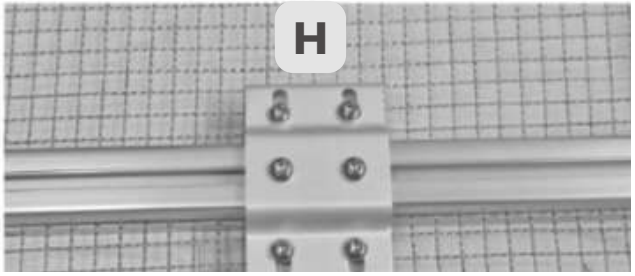

STANDARD T-SLOT COVERS

PVC MATERIAL, BLACK

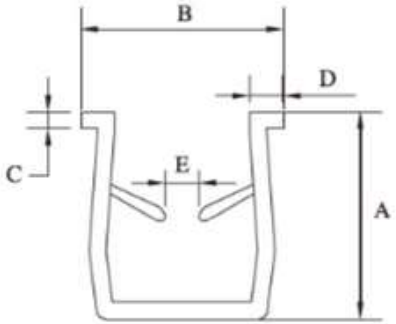

Part No	A	B	C	D	E	kg	Compatibility Code
4044	9.2	10	1	2	2	0.053	8D
4045	12.3	12	1	2	2	0.068	10D

PANEL GASKET, PVC MATERIAL, LIGHT GREY

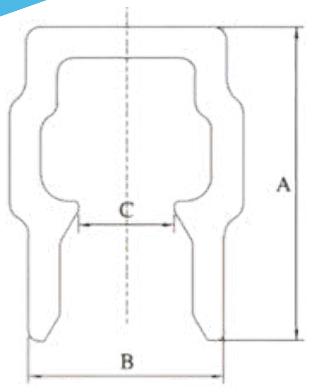

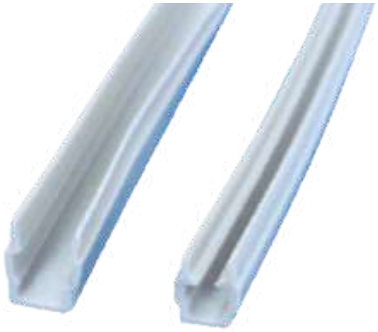

Part No	A	B	C	kg	Compatibility Code
4048	10	6.2	3	0.032	6E
4049	13	9.3	5	0.025	8E

RUBBER PANEL GASKET

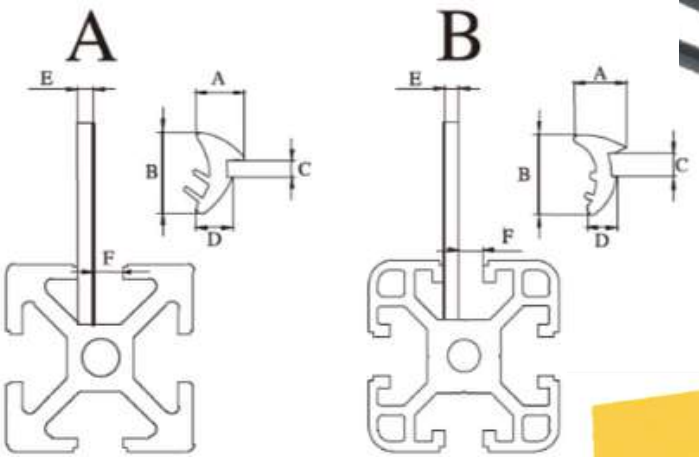

Part No	A	B	C	D	E	F
4120	4.4	11	2.5	2.4	5	1
4120–B	4.4	11	2.5	2.4	5	1
4121	3.4	11	4.5	2.4	5	1
4121–B	3.4	11	4.5	2.4	5	1
4122	8	10	2.5	5.85	5	3
4122–B	8	10	2.5	5.85	5	3
4123	8	12.1	4.5	4.75	5	3
4123–B	8	12.1	4.5	4.75	5	3
4124	8.5	12.5	2.5	6.7	3	5
4124–B	8.5	12.5	2.5	6.7	3	5
4125	10.65	15	4.5	6.1	3	5
4125–B	10.65	15	4.5	6.1	3	5
4126	12	16	5	9	3	7
4126–B	12	16	5	9	3	7
4127	12	16	6	8.5	3	7
4127–B	12	16	6	8.5	3	7

ACRILIC PLATE

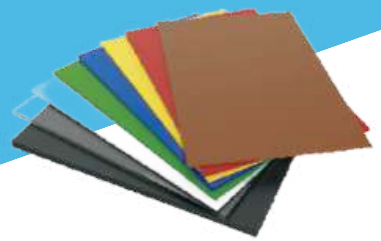

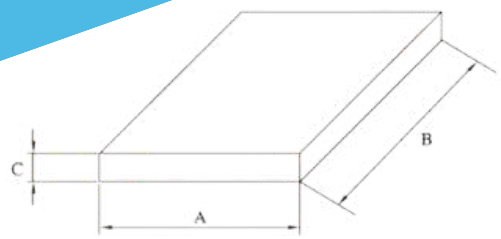

ARE ACOST-EFFECTIVE LIGHTWEIGHT OPTION THAT PROVIDES HIGH OPTICAL CLARITY

IS IS STABLE UP 180° FAHRENHEIT AND WEATHER RESISTANT, MAKING IT IDEAL FOR BOTH INDOOR AND OUTDOOR APPLICATIONS

ACRYLIC IS MORE IMPACT RESISTANT THAN GLASS WHILE BEING HALF THE WEIGHT

IT IS EASILY MACHINED AND COMES IN A RANGE OF COLORS AND THICKNESSES

THIS PANEL IS COMMONLY USED IN DISPLAYS, SIGNS, FURNITURE AND PARTITIONS

Part No	A	B	C	Color
9126	1.22m	2.44m	1mm	Clear / White Black / Bronze Gray / Yellow Red / Blue Silver / Platinam
9127			2mm	
9128			3mm	
9129			4mm	
9130			5mm	
9131			6mm	
9132			8mm	
9133			10mm	

ALUMINIUM BASE PLATED

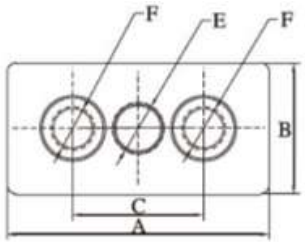

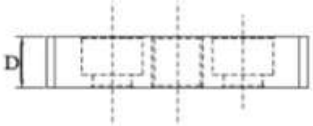

AL CNC MANUFACTURED, SILVERY WHITE ANODIZING

Part No	QTY	Description
5111	2	M8 × 25mm SHCS
5111	2	M8 × 25mm SHCS
5113	2	M12 × 30mm SHCS
5113	2	M12 × 30mm SHCS

Part No	A	B	C	D	E	F	kg	Compatibility Code
7001	60	30	30	12	M8	ϕ9	0.045	3060A
7001-2	60	30	30	12	M10	ϕ9	0.044	
7001-3	60	30	30	12	M12	ϕ9	0.043	
7001-4	60	30	30	12	M16	ϕ9	0.043	
7002-1	80	40	40	12	M8	ϕ9	0.091	4080A
7002-2	80	40	40	12	M10	ϕ9	0.091	
7002-3	80	40	40	12	M12	ϕ9	0.090	
7002-4	80	40	40	12	M16	ϕ9	0.089	
7003	90	45	45	19	M12	ϕ13	0.173	4590A
7003-2	90	45	45	19	M16	ϕ13	0.172	
7003-3	90	45	45	19	M20	ϕ13	0.171	
7033	100	50	50	19	M16	ϕ13	0.25	50100A
7033-2	100	50	50	19	M20	ϕ13	0.25	
7033-3	100	50	50	19	M24	ϕ13	0.25	

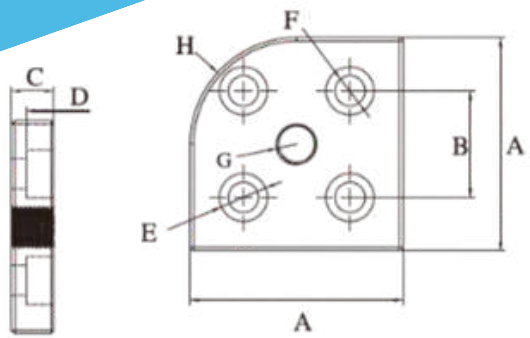

AL CNC MANUFACTURED, SILVERY WHITE ANODIZING

Part No	QTY	Description
5149	4	M8 × 20mm SHCS
5149	4	M8 × 20mm SHCS

Part No	A	B	C	D	E	F	G	H	kg	Compatibility Code
7940–1	60	30	12	8	ϕ13.5	ϕ8.5	M8	R30	0.092	6630R
7940–2	60	30	12	8	ϕ13.5	ϕ8.5	M12	R30	0.090	
7940–3	60	30	12	8	ϕ13.5	ϕ8.5	M16	R30	0.088	
7941–1	80	40	12	8	ϕ13.5	ϕ8.5	M12	R40	0.177	8840R
7941–2	80	40	12	8	ϕ13.5	ϕ8.5	M16	R40	0.175	
7941–3	80	40	12	8	ϕ13.5	ϕ8.5	M20	R40	0.172	

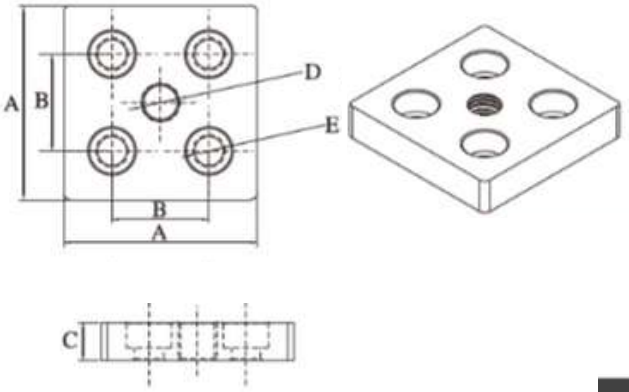

AL CNC MANUFACTURED, SILVERY WHITE ANODIZING

Part No	QTY	Description
5111	4	M8 × 25mm SHCS
5111	4	M8 × 25mm SHCS
5113	4	M12 × 30mm SHCS
5113	4	M12 × 30mm SHCS

Part No	A	B	C	D	E	kg	Compatibility Code
7004	60	30	12	M8	ϕ9	0.097	6060A
7004–2	60	30	12	M12	ϕ9	0.096	
7004–3	60	30	12	M16	ϕ9	0.095	
7005	80	40	12	M12	ϕ9	0.187	8080A
7005–2	80	40	12	M16	ϕ9	0.185	
7005–3	80	40	12	M20	ϕ9	0.183	
7006	90	45	19	M12	ϕ13	0.354	9090A
7006–2	90	45	19	M16	ϕ13	0.351	
7006–3	90	45	19	M20	ϕ13	0.348	
7007	100	50	19	M16	ϕ13	0.420	100100A
7007–2	100	50	19	M20	ϕ13	0.416	
7007–3	100	50	19	M24	ϕ13	0.412	

ZINC BASE PLATED

DIE-CAST ZINC, BLACK POWDER COAT

Part No	QTY	Description
5111	2	M8 × 25mm SHCS
5111	2	M8 × 25mm SHCS
5113	2	M12 × 30mm SHCS

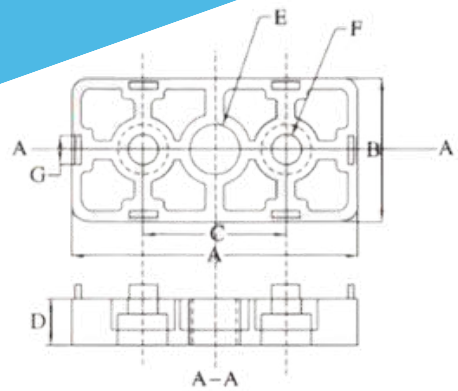

Part No	A	B	C	D	E	F	G	kg	Compatibility Code
7025	60	30	30	13	M8	ϕ9	8	0.089	3060B
7025–2	60	30	30	13	M10	ϕ9	8	0.088	
7025–3	60	30	30	13	M12	ϕ9	8	0.087	
7027	80	40	40	13	M10	ϕ9	8	0.168	4080B
7027–2	80	40	40	13	M12	ϕ9	8	0.166	
7027–3	80	40	40	13	M16	ϕ9	8	0.164	
7029	90	45	45	18	M12	ϕ13	10	0.313	4590B
7029–2	90	45	45	18	M16	ϕ13	10	0.311	
7029–3	90	45	45	18	M20	ϕ13	10	0.309	

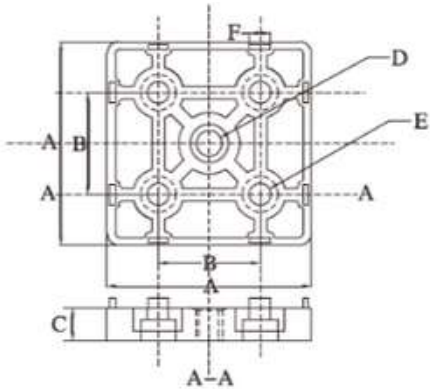

DIE-CAST ZINC, BLACK POWDER COAT

Part No	QTY	Description
5111	4	M8 × 25mm SHCS
5111	4	M8 × 25mm SHCS

Part No	A	B	C	D	E	F	kg	Compatibility Code
7030	60	30	13	M10	ϕ9	8	0.174	6060B
7030–2	60	30	13	M12	ϕ9	8	0.170	
7030–3	60	30	13	M16	ϕ9	8	0.166	
7031	80	40	13	M12	ϕ9	8	0.327	8080B
7031–2	80	40	13	M16	ϕ9	8	0.323	
7031–3	80	40	13	M20	ϕ9	8	0.319	

DIE-CAST ZINC, BLACK POWDER COAT

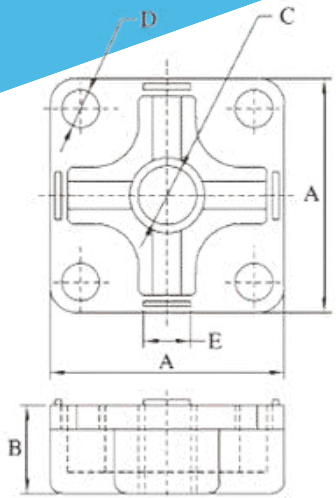

Part No	QTY	Description
5230	4	M5 × 20mm SHCS & internal expanSion Nut
5232	4	M6 × 25mm SHCS & internal expanSion Nut

Part No	A	B	C	D	E	kg	Compatibility Code
7026	40	15	M8	ϕ6.3	8	0.090	40B
7028	45	15	M12	ϕ6.3	10	0.110	45B

DIE-CAST ZINC, BLACK POWDER COAT

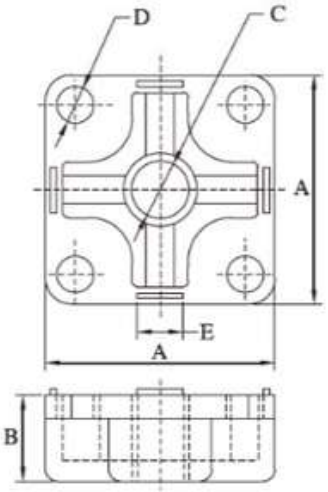

Part No	QTY	Description
5230	4	M5 × 20mmS HCS

Part No	A	B	C	D	E	kg	Compatibility Code
7024	30	15	M8	ϕ5.3	8	0.049	30B

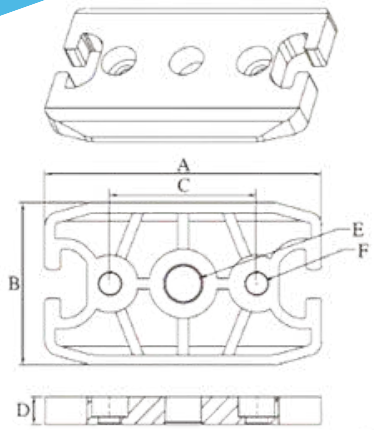

DIE-CAST ZINC, BLACK POWDER COAT

Part No	QTY	Description
5109	2	M6 × 20mm SHCS

Part No	A	B	C	D	E	F	kg	Compatibility Code
7032	80	47	42.5	8	M12	ϕ6.3	0.10	4780B

LEVELING BASE PLATED

MANUFACTURED, SILVERY WHITE ANODIZING

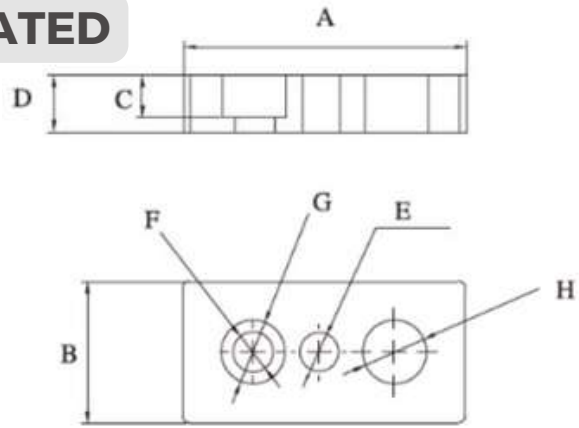

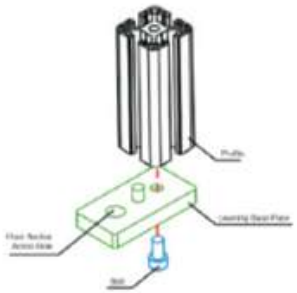

Part No	A	B	C	D	E	F	G	H	kg	Compatibility Code
7942	60	30	9	12	ϕ8.2	ϕ8.5	ϕ13.5	ϕ13.5	0.049	3030C
7943	80	40	9	12	ϕ8.2	ϕ8.5	ϕ13.5	ϕ13.5	0.094	4040C
7944	90	45	12	19	ϕ10.2	ϕ12.5	ϕ19	ϕ13.5	0.118	4545C
7983	100	50	12	19	ϕ8.2	ϕ12.5	ϕ19	ϕ13.5	0.243	5050C
7968	120	60	12	19	ϕ10.2	ϕ12.5	ϕ19	ϕ13.5	0.359	6060CB

AL CNC MANUFACTURED, SILVERY WHITE ANODIZING

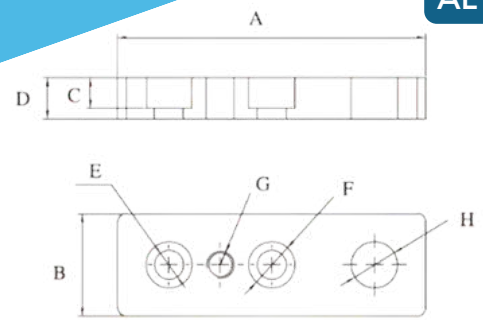

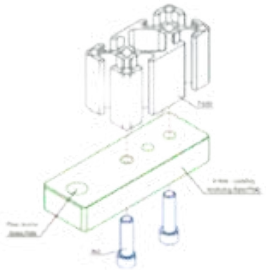

Part No	A	B	C	D	E	F	G	H	kg	Compatibility Code
7945	90	30	9	12	ϕ8.5	ϕ13.5	M12	ϕ13.5	0.075	3060C–M12
7946	120	40	9	12	ϕ8.5	ϕ13.5	M12	ϕ13.5	0.134	4080C–M12
7947	135	45	12	19	ϕ13.5	ϕ19	M12	ϕ13.5	0.286	4590C–M12
7984	150	50	12	19	ϕ13	ϕ19	M12	ϕ13.5	0.362	50100C–M12

AL CNC MANUFACTURED, SILVERY WHITE ANODIZING

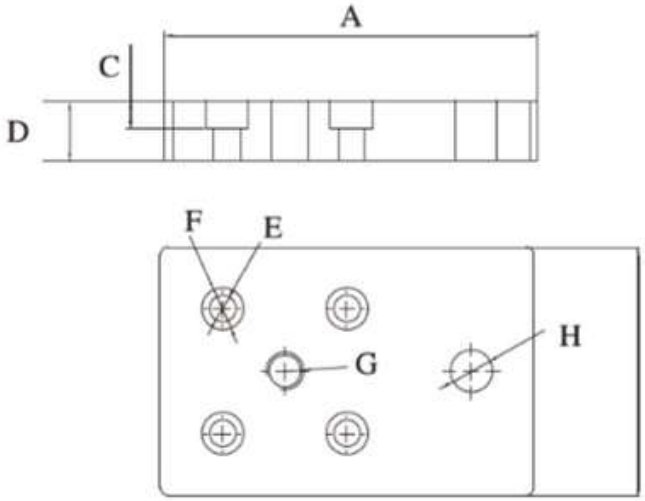

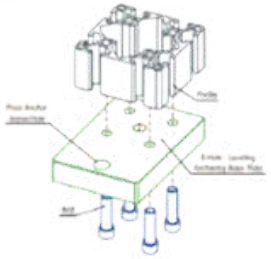

Part No	A	B	C	D	E	F	G	H	kg	Compatibility Code
7948	90	60	9	12	ϕ8.5	ϕ13.5	M12	ϕ13.5	0.157	6060C–M12
7949	120	80	9	19	ϕ8.5	ϕ13.5	M12	ϕ13.5	0.472	8080C–M12

OFFSET TAP BASED PLATE

AL CNC MANUFACTURED, SILVERY WHITE ANODIZING

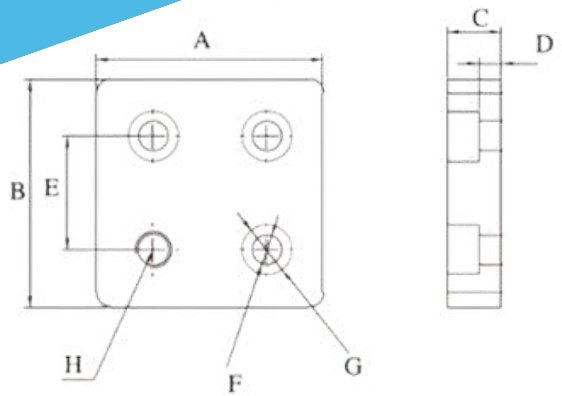

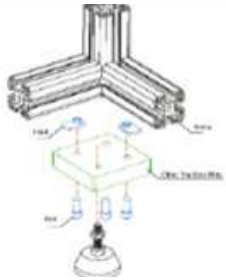

Part No	A	B	C	D	E	F	G	H	kg	Compatibility Code
7950–1	50	50	12	5	25	ϕ 6.5	ϕ11	M6	0.070	2525D–M6
7950–2	50	50	12	5	25	ϕ 6.5	ϕ11	M8	0.071	2525D–M8
7951–1	60	60	12	4	30	ϕ 8.5	ϕ12.5	M8	0.102	3030D–M8
7951–2	60	60	12	4	30	ϕ 8.5	ϕ12.5	M12	0.101	3030D–M12
7952–1	80	80	19	10	40	ϕ 8.5	ϕ12.5	M8	0.304	4040D–M8
7952–2	80	80	19	10	40	ϕ 8.5	ϕ12.5	M12	0.302	4040D–M12
7953–1	90	90	19	10	45	ϕ 8.5	ϕ12.5	M12	0.390	4545D–M12
7953–2	90	90	19	10	45	ϕ 8.5	ϕ12.5	M16	0.388	4545D–M16
7954–1	100	100	19	10	50	ϕ 8.5	ϕ12.5	M12	0.487	5050D–M12
7954–2	100	100	19	10	50	ϕ 8.5	ϕ12.5	M16	0.485	5050D–M16

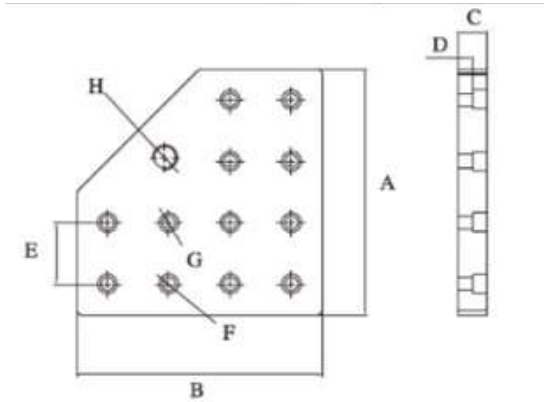

AL CNC MANUFACTURED, SILVERY WHITE ANODIZING

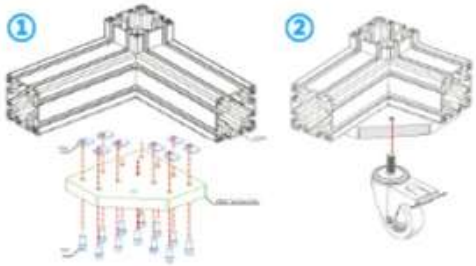

Part No	A	B	C	D	E	F	G	H	kg	Compatibility Code
7955–1	100	100	12	5	25	ϕ 6.5	ϕ11	M8	0.247	2550D–M8
7955–2	100	100	12	5	25	ϕ 6.5	ϕ11	M12	0.246	2550D–M12
7956–1	120	120	12	4	30	ϕ 8.5	ϕ12.5	M12	0.357	3060D–M12
7956–2	120	120	12	4	30	ϕ 8.5	ϕ12.5	M16	0.355	3060D–M16
7957–1	160	160	19	10	40	ϕ 8.5	ϕ12.5	M16	1.077	4080D–M16
7957–2	160	160	19	10	40	ϕ 8.5	ϕ12.5	M20	1.075	4080D–M20
7958–1	180	180	19	10	45	ϕ 8.5	ϕ12.5	M16	1.382	4590D–M16
7958–2	180	180	19	10	45	ϕ 8.5	ϕ12.5	M20	1.380	4590D–M20
7959–1	200	200	19	10	50	ϕ 8.5	ϕ12.5	M16	1.713	50100D–M16
7959–2	200	200	19	10	50	ϕ 8.5	ϕ12.5	M20	1.711	50100D–M20

OFFSET TAP BASED PLATE MULTI PURPOSE

AL CNC MANUFACTURED, SILVERY WHITE ANODIZING

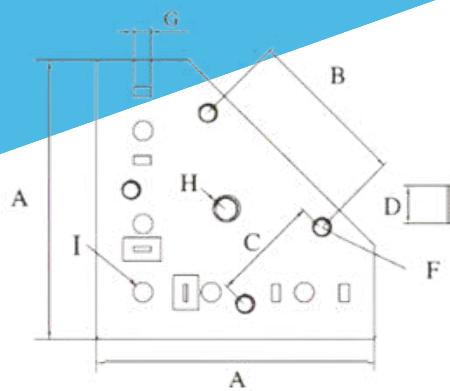

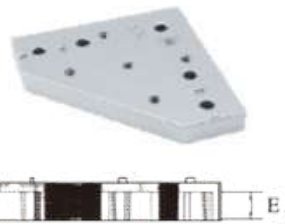

Part No	A	B	C	D	E	F	G	H	I	kg	Compatibility Code
7980–1	90	52	35	12	9	M6	5.8	M8	ϕ6.3	0.107	3030F–M8
7980–2	90	52	35	12	9	M6	5.8	M12	ϕ6.3	0.106	3030F–M12
7981–1	120	60	45	15	10	M8	7.8	M8	ϕ8.5	0.281	4040F–M8
7981–2	120	60	45	15	10	M8	7.8	M12	ϕ8.5	0.280	4040F–M12
7982–1	130	60	45	15	10	M8	9.8	M8	ϕ8.5	0.277	4545F–M8
7982–2	130	60	45	15	10	M8	9.8	M12	ϕ8.5	0.276	4545F–M12

FLANGE MOUNT CASTER PLATE

AL CNC MANUFACTURED, SILVERY WHITE ANODIZING

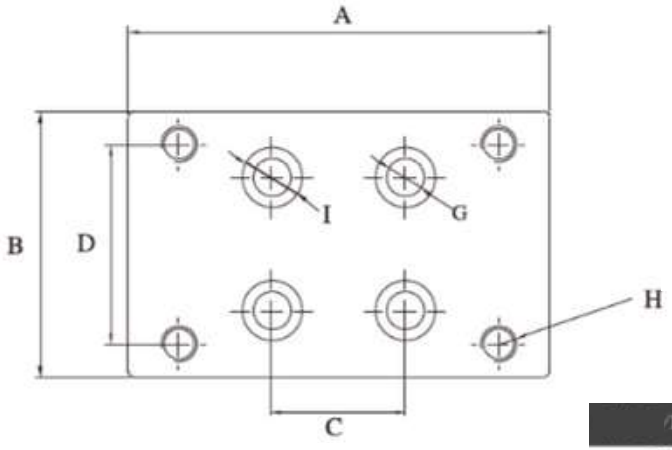

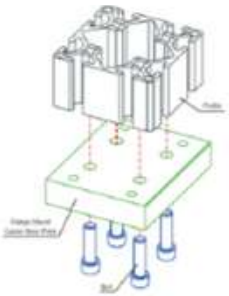

Part No	A	B	C	D	E	F	G	H	I	kg	Compatibility Code
7964	95	60	30	45	8	12	ϕ8.5	M8	ϕ12.5	0.177	6060A
7966	97	80	40	60	10	19	ϕ8.5	M8	ϕ12.5	0.384	8080A

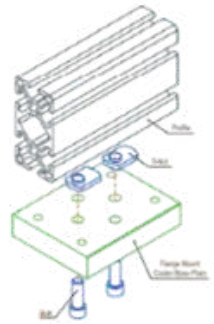

AL CNC MANUFACTURED, SILVERY WHITE ANODIZING

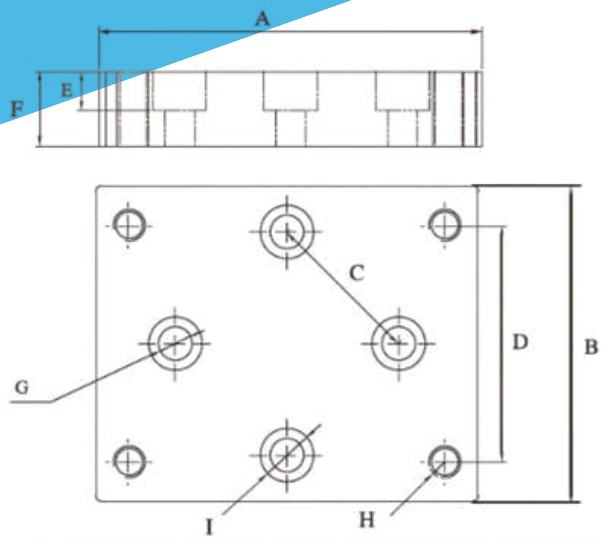

Part No	A	B	C	D	E	F	G	H	I	kg	Compatibility Code
7965	95	60	30	45	8	12	ϕ8.5	M8	ϕ12.5	0.177	6060B
7967	97	80	40	60	10	19	ϕ8.5	M8	ϕ12.5	0.384	8080B

FLANGE MOUNT CASTER BASE PLATE

AL CNC MANUFACTURED, SILVERY WHITE ANODIZING

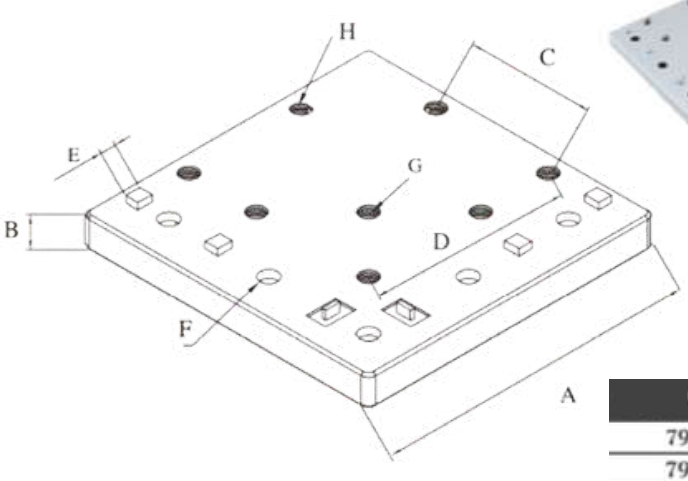

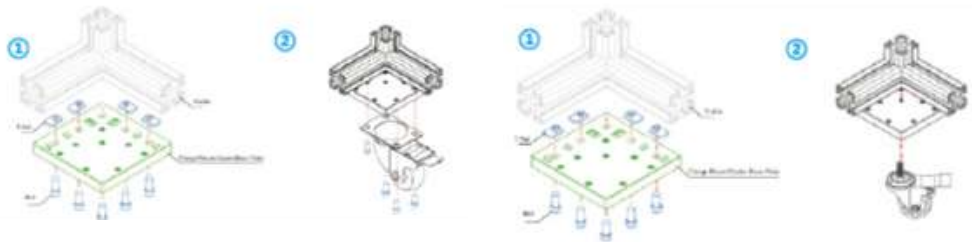

Part No	A	B	C	D	E	F	G	H	kg	Compatibility Code
7960	115	12	45	72	5.8	ϕ7	M8	M8	0.221	30–75
7961	115	12	60	80	5.8	ϕ7	M8	M8	0.218	30–100
7962	120	15	45	72	7.8	ϕ8.5	M8	M8	0.309	40–75
7963	120	15	60	80	7.8	ϕ8.5	M8	M8	0.307	40–100

TAIL BASE PLATE

AL CNC MANUFACTURED, SILVERY WHITE ANODIZING

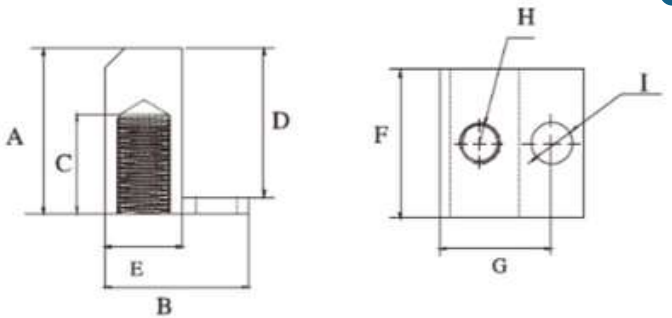

Part No	A	B	C	D	E	F	G	H	I	kg	Compatibility Code
7969	24	28	20	20	16	20	22	M6	ϕ 6.3	0.021	2020E
7970	29	28	25	25	16	25	22	M6	ϕ 6.3	0.031	2525E
7971	34	30	25	30	18	30	24	M8	ϕ 8.3	0.044	3030E
7972	45	40	30	40	20	40	30	M12	ϕ 8.3	0.095	4040E
7973	50	44	30	45	24	45	34	M12	ϕ 12.5	0.138	4545E

AL CNC MANUFACTURED, SILVERY WHITE ANODIZING

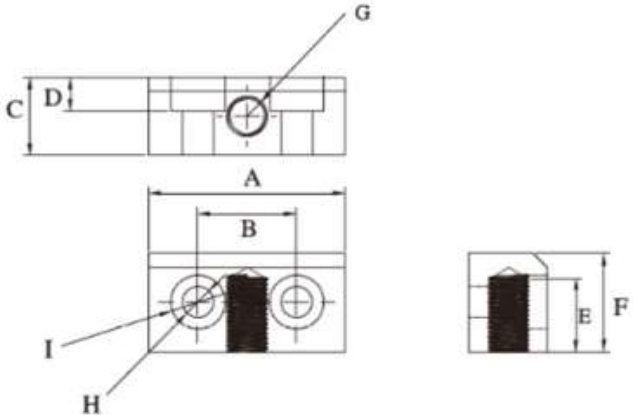

/Part No	A	B	C	D	E	F	G	H	I	kg	Compatibility Code
7974	40	20	16	7	15	20	M8	ϕ 6.3	ϕ 11	0.026	2040E
7975	50	25	16	7	20	25	M8	ϕ 6.3	ϕ 11	0.045	2550E
7976	60	30	18	9	25	30	M12	ϕ 8.5	ϕ 13	0.071	3060E
7977	80	40	20	9	30	40	M16	ϕ 8.5	ϕ 13	0.147	4080E
7978	90	45	24	9	30	45	M16	ϕ 13	ϕ 19.5	0.211	4590E
7979	100	50	24	9	30	50	M16	ϕ 13	ϕ 19.5	0.287	50100E

PLANE CONNECTOR

INJECTION MOLDING PA66+GF30

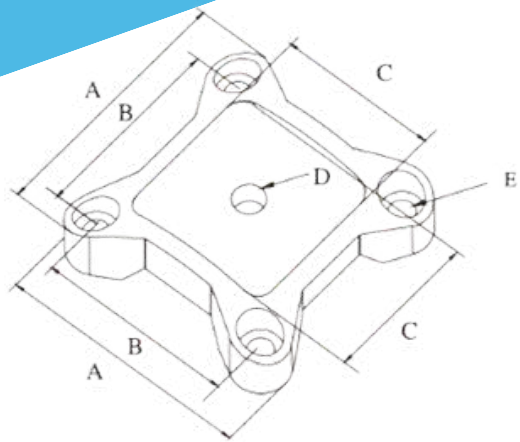

Part No	QTY	Description
5090	1	M8 x 20mm FHSCS

Part No	A	B	C	D	E	kg	Compatibility Code
ML-1085	65	50	40.7	ϕ8.2	ϕ6.5	0.036	40

STEEL FLOOR BRACKET

STEEL, BLACK POWDER COATING, ZINC-PLATED

R L

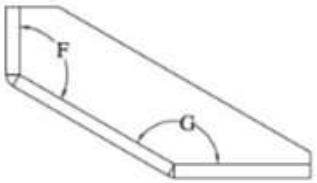

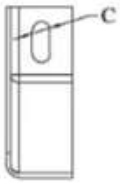

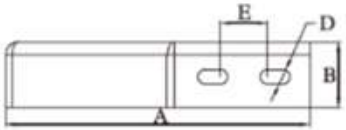

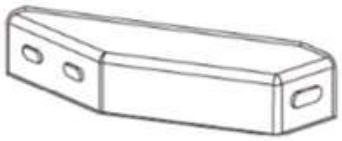

Part No	QTY	Description
5026 & 5077	2	Drop-In T-Studs & Flange Nuts
5268	1	Wedge Floor Anchor

Part No	A	B	C	D	E	F	G	kg	Compatibility Code
7142	185	40	ϕ10.8	ϕ8.8	28.8	120°	150°	0.355	40A-L
7143	185	40	ϕ10.8	ϕ8.8	28.8	120°	150°	0.355	40A-R

ALUMINIUM FLOOR BRACKET

AL CNC MANUFACTURED, SILVERY WHITE ANODIZING

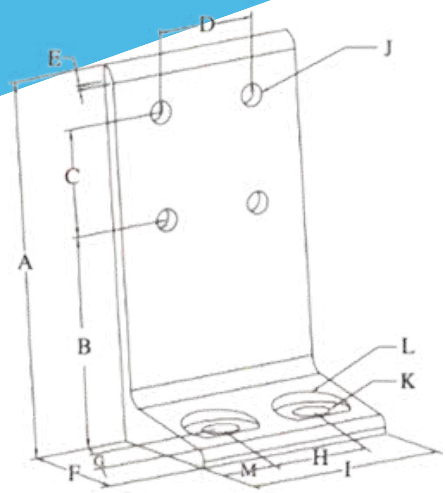

Part No	QTY	Description
5099&5139&5268	2&1&1	BHSCS&Econ T-Nut&Wedge Floor Anchor
5099&5139&5268	4&2&1	BHSCS&Econ T-Nut&Wedge Floor Anchor
5102&5144&5269	2&1&1	BHSCS&Econ T-Nut&Wedge Floor Anchor
5102&5144&5269	4&2&1	BHSCS&Econ T-Nut&Wedge Floor Anchor

Part No	A	B	C	D	E	F	G	H	I	J	K	L	M	kg	Compatibility Code
7135	140	80	40	–	6	56	20	–	30	ϕ6.3	ϕ10.5	25	15	0.095	30B
7137	140	80	40	30	6	56	20	30	60	ϕ6.3	ϕ10.5	25	15	0.18	3060B
7136	140	80	40	–	6	56	20	–	40	ϕ8.3	ϕ13.5	28	20	0.125	40B
7138	140	80	40	40	6	56	20	40	80	ϕ8.3	ϕ13.5	28	20	0.235	4080B

FLOOR MOUNT BASE PLATE

STEEL, GREY POWDER COATING

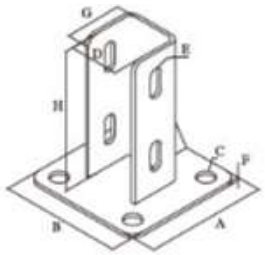

Part No	A	B	C	D	E	F	G	H	kg	Compatibility Code
7200	60	60	ϕ8	21	R3.25	4	20	80	0.23	20A
7213	65	65	ϕ8	26	R3.25	4	25	80	0.28	25A
7202	80	80	ϕ10	31	R4	4	30	80	0.36	30A
7204	100	100	ϕ14	41	R5	4	40	115	0.63	40A
7206	105	105	ϕ14	46	R5	4	45	115	0.70	45A
7215	115	115	ϕ14	51	R5	4	50	115	0.82	50A

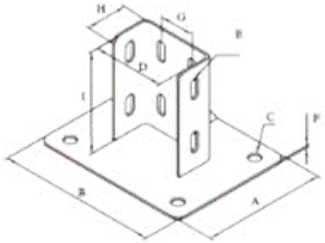

STEEL, GREY POWDER COATING

Part No	A	B	C	D	E	F	G	H	I	kg	Compatibility Code
7201	80	100	ϕ8	41	R3.25	4	20	20	80	0.38	2040A
7214	95	120	ϕ8	51	R3.25	4	25	25	80	0.53	2550A
7203	110	140	ϕ10	61	R4	4	30	30	80	0.69	3060A
7205	140	180	ϕ14	81	R5	4	40	40	115	1.20	4080A
7207	155	200	ϕ14	91	R5	4	45	45	115	1.40	4590A
7208	170	220	ϕ14	101	R5	4	50	50	115	1.65	50100A

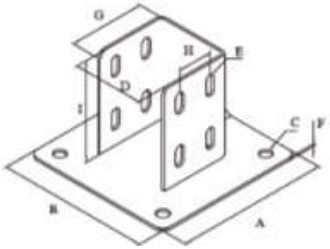

STEEL, GREY POWDER COATING

Part No	A	B	C	D	E	F	G	H	I	kg	Compatibility Code
7209	135	135	ϕ14	61	R5	4	60	30	115	1.02	6060A
7210	175	175	ϕ14	81	R5	4	80	40	115	1.60	8080A
7211	195	195	ϕ14	91	R5	4	90	45	115	1.85	9090A
7212	215	215	ϕ14	101	R5	4	100	50	115	2.20	100100A

LARGE BASE GLIDES (STEMS SWIVEL 15° IN ALL DIRECTIONS)

NICKEL PLATED STUD WITH GLASS NYLON BASED

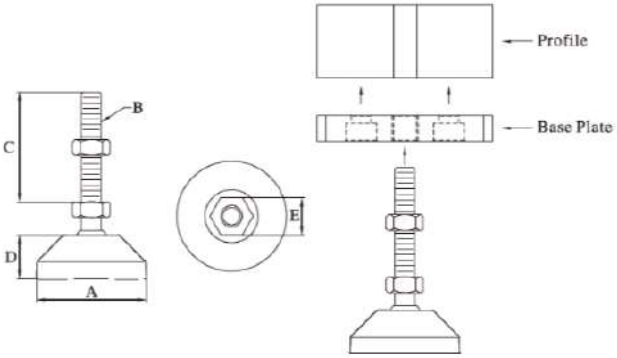

Part No	A	B	C	D	E	kg
7216	40A	M6	30	20	13.8	0.047
7217		M6	50	20	13.8	0.051
7218		M8	30	20	13.8	0.056
7219		M8	50	20	16.9	0.061
7220		M8	80	20	16.9	0.080
7221		M8	100	20	16.9	0.087
7034	50A	M8	30	20	14	0.072
7035		M8	50	20	14	0.078
7036		M10	50	20	17	0.090
7037		M10	80	20	17	0.104
7038		M12	50	20	19	0.105
7039		M12	80	20	19	0.126
7040		M12	100	20	19	0.142
7041	60A	M8	50	24	14	0.093
7042		M8	80	24	14	0.101
7043		M10	50	24	17	0.105
7044		M10	80	24	17	0.119
7045		M12	50	24	19	0.120
7046		M12	80	24	19	0.139
7047		M12	100	24	19	0.156

NICKEL PLATED STUD WITH GLASS NYLON BASED

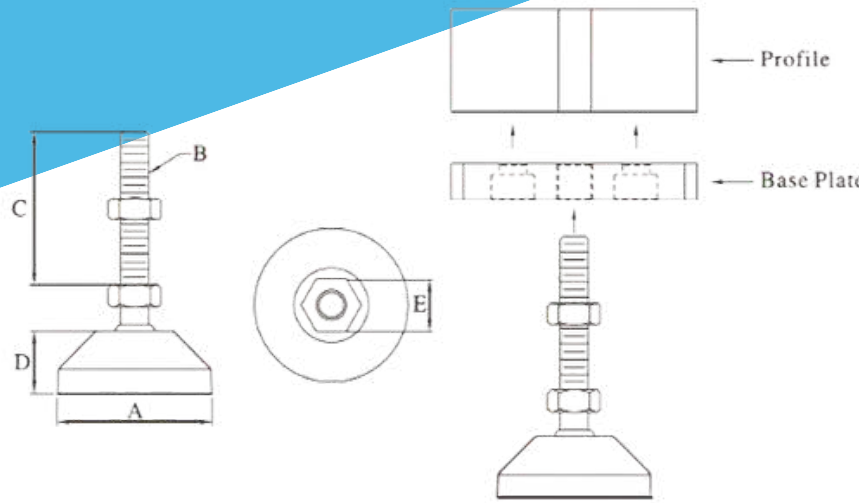

Part No	A	B	C	D	E	kg
7048	80A	M8	50	28	14	0.126
7049		M8	80	28	14	0.134
7050		M8	100	28	14	0.141
7051		M10	80	28	17	0.154
7052		M10	100	28	17	0.162
7053		M12	50	28	19	0.153
7054		M12	80	28	19	0.173
7055		M12	100	28	19	0.200
7056		M16	80	28	24	0.234
7057		M16	100	28	24	0.262
7058	100A	M12	80	30	19	0.163
7059		M12	100	30	19	0.276
7060		M16	80	30	24	0.322
7061		M16	100	30	24	0.348
7062		M20	80	30	30	0.404
7063		M20	100	30	30	0.447
7064		M20	120	30	30	0.496
7065		M24	100	30	35.5	0.640
7066		M24	120	30	35.5	0.668

CONTAMOS CON SERVICIO INTERNACIONAL

Devol
C&O

www.devol.mx

VENTAS: OMAR GARCÍA M.
Cel: 222 350 50 54 ventas@devol.mx
Av. Independencia 1811 San Pedro Cholula, Puebla.

NICKEL PLATED STUD WITH GLASS NYLON BASED

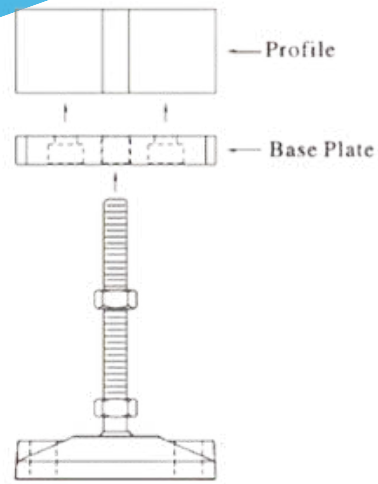

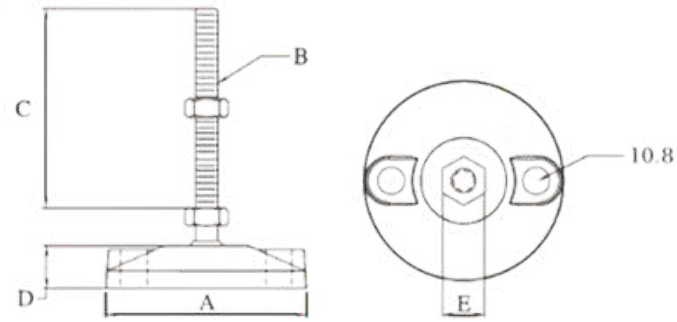

Part No	A	B	C	D	E	kg
7067	80B	M8	50	17	14	0.107
7068		M8	80		14	0.115
7069		M8	100		14	0.121
7070		M10	80		17	0.134
7071		M10	100		17	0.143
7072		M12	50		19	0.133
7073		M12	80		19	0.155
7074		M12	100		19	0.171
7075		M16	80		24	0.214
7076		M16	100		24	0.241
7077	100B	M12	80	20	19	0.238
7078		M12	100		19	0.250
7079		M16	80		24	0.295
7080		M16	100		24	0.322
7081		M20	100		30	0.420
7082		M20	120		30	0.462
7083		M24	100		35.5	0.552
7084		M24	120		35.5	0.609

NICKEL PLATED STUD WITH GLASS NYLON BASED

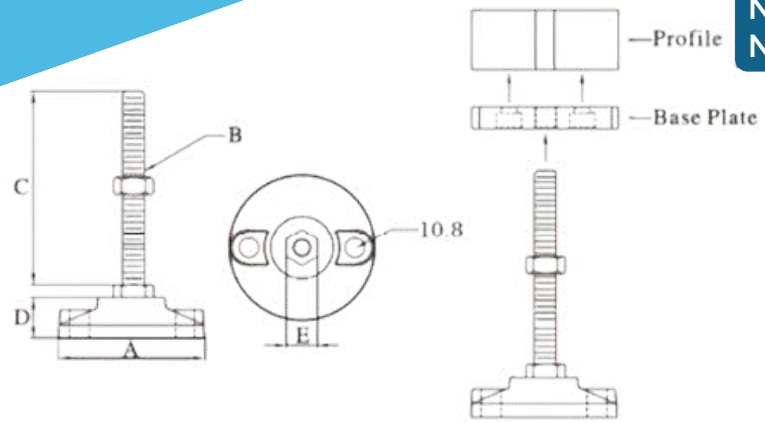

Part No	A	B	C	D	E	kg
7085	50C	M8	30	21	14	0.075
7086		M8	50		14	0.081
7108		M8	80		14	0.100
7087		M10	50		17	0.096
7088		M10	80		17	0.109
7089		M12	50		19	0.111
7090		M12	80		19	0.132
7091		M12	100		19	0.196
7092	60C	M8	50	24	14	0.094
7093		M8	80		14	0.103
7094		M10	50		17	0.111
7095		M10	80		17	0.122
7096		M12	50		19	0.125
7097		M12	80		19	0.142
7098	80C	M12	80	22	19	0.191
7099		M12	100		19	0.206
7100		M16	80		24	0.252
7101		M16	100		24	0.275
7102	100C	M16	80	22	24	0.285
7103		M16	100		24	0.311
7104		M20	100		30	0.422
7105		M20	120		30	0.464
7106		M24	100		35.5	0.545
7107		M24	120		35.5	0.612

LARGE BASE GLIDES

SS 304 STUD WITH GLASS-FILLED NYLON BASE

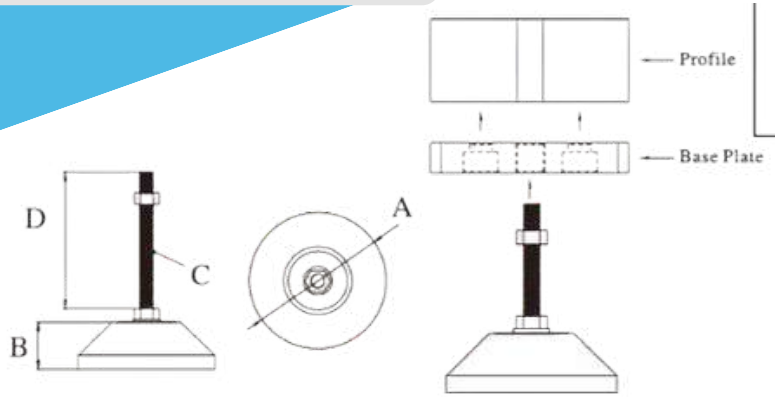

Part No	A	B	C	D	E	kg
7067	80B	M8	50	17	14	0.107
7068		M8	80		14	0.115
7069		M8	100		14	0.121
7070		M10	80		17	0.134
7071		M10	100		17	0.143
7072		M12	50		19	0.133
7073		M12	80		19	0.155
7074		M12	100		19	0.171
7075		M16	80		24	0.214
7076		M16	100		24	0.241
7077	100B	M12	80	20	19	0.238
7078		M12	100		19	0.250
7079		M16	80		24	0.295
7080		M16	100		24	0.322
7081		M20	100		30	0.420
7082		M20	120		30	0.462
7083		M24	100		35.5	0.552
7084		M24	120		35.5	0.609

NICKEL-PLATED STUD WITH GLASS BASE

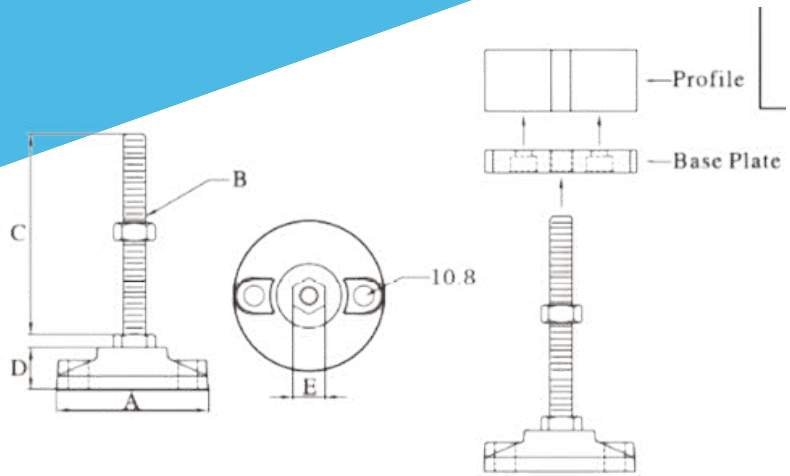

Part No	A	B	C	D	E	kg
7085	50C	M8	30	21	14	0.075
7086		M8	50		14	0.081
7108		M8	80		14	0.100
7087		M10	50		17	0.096
7088		M10	80		17	0.109
7089		M12	50		19	0.111
7090		M12	80		19	0.132
7091		M12	100		19	0.196
7092	60C	M8	50	24	14	0.094
7093		M8	80		14	0.103
7094		M10	50		17	0.111
7095		M10	80		17	0.122
7096		M12	50		19	0.125
7097		M12	80		19	0.142
7098	80C	M12	80	22	19	0.191
7099		M12	100		19	0.206
7100		M16	80		24	0.252
7101		M16	100		24	0.275
7102	100C	M16	80	22	24	0.285
7103		M16	100		24	0.311
7104		M20	100		30	0.422
7105		M20	120		30	0.464
7106		M24	100		35.5	0.545
7107		M24	120		35.5	0.612

SS 304 STUD WITH GLASS-FILLED NYLON BASE

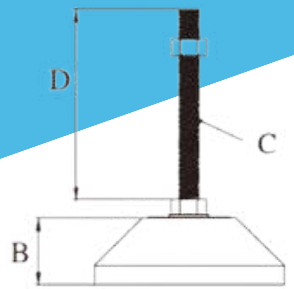

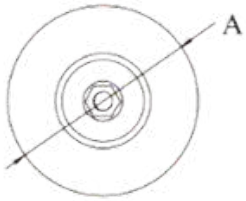

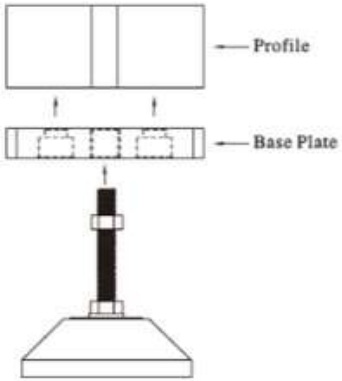

/Part No	A	B	C	D	kg
7835	80F	26.5	M8	80	0.1347
7836				100	0.1416
7837			M10	80	0.1631
7838				100	0.1743
7839				120	0.1855
7840			M12	80	0.1943
7841				100	0.2107
7842				120	0.2271
7843				150	0.2517
7844			M16	80	0.2606
7845				100	0.2901
7846				120	0.3195
7847				150	0.3637
7849			M20	80	0.3281
7850				100	0.3749
7851				120	0.4217
7852				150	0.1920
7853			M24	100	0.4799
7854				150	0.6473
7855				200	0.8148
7856				250	0.9822

SS 304 STUD WITH GLASS-FILLED NYLON BASE

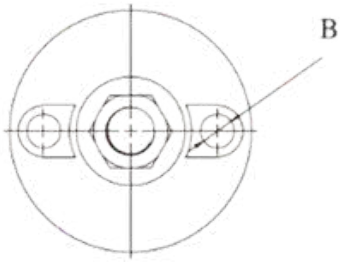

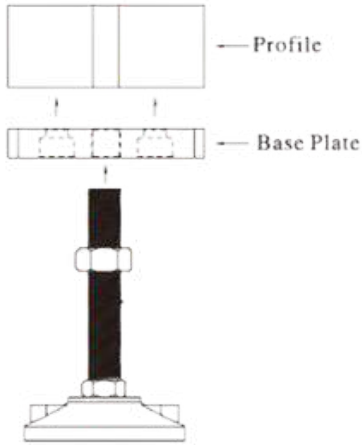

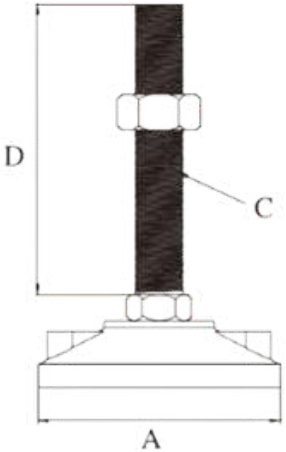

Part No	A	B	C	D	kg
7857	100G	14	M12	80	0.2247
7858				100	0.2411
7859				120	0.2575
7860			M16	80	0.3104
7861				100	0.3399
7862				120	0.3694
7863				150	0.4135
7864			M20	100	0.4472
7865				120	0.4940
7866				150	0.5643
7867				200	0.6814
7868			M24	100	0.5481
7869				120	0.6150
7870				150	0.7155
7871				200	0.8829
7872				250	1.0504

LARGE BASE GLIDES (STEMS SWIVEL 15° IN ALL DIRECTIONS)

SS 304 STUD WITH GLASS-FILLED NYLON BASE

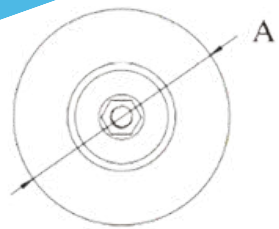

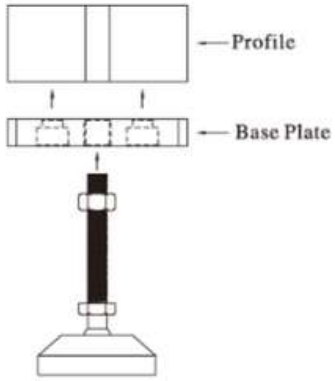

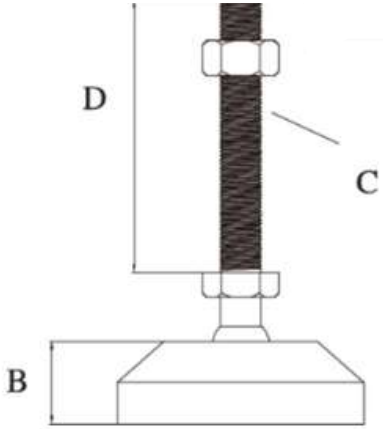

Part No	A	B	C	D	kg
7873	40D	17.5	M8	30	0.0470
7874				50	0.0539
7875				80	0.0644
7876			M10	30	0.0597
7877				50	0.0709
7878				80	0.0877
7879			M12	50	0.0881
7880				80	0.1127
7881				100	0.1291
7882				120	0.1455
7883	50D	20	M8	30	0.0536
7884				50	0.0605
7885				80	0.0709
7886			M10	50	0.0788
7887				80	0.0956
7888				100	0.1179
7889			M12	50	0.0918
7890				80	0.1164
7891				100	0.1328
7892				120	0.1492
7893	60D	23	M8	50	0.0764
7894				80	0.0868
7895				100	0.0938
7896			M10	50	0.0934
7897				80	0.1101
7898				100	0.1325
7899			M12	50	0.1072
7900				80	0.1318
7901				100	0.1482
7902				120	0.1646

LARGE BASE GLIDES (STEMS SWIVEL 15° IN ALL DIRECTIONS)

SS 304 STUD WITH GLASS-FILLED NYLON BASE

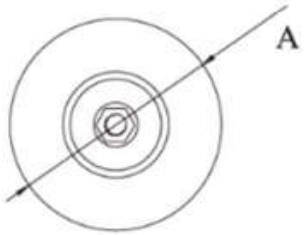

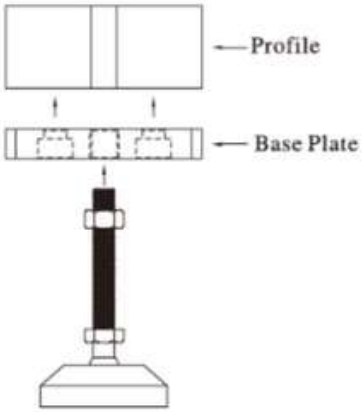

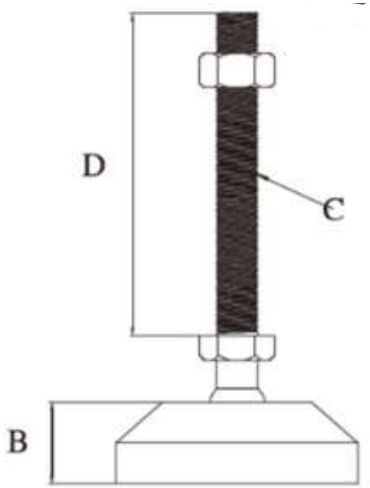

Part No	A	B	C	D	kg
7903	80D	29.5	M8	80	0.1226
7904				100	0.1295
7905			M10	80	0.1473
7906				100	0.1585
7907				120	0.1697
7908			M12	80	0.1696
7909				100	0.1860
7910				120	0.2024
7911				150	0.2270
7912			M16	80	0.2724
7913				100	0.3019
7914				120	0.3313
7915				150	0.3755
7916			M20	100	0.3782
7917				120	0.4250
7918				150	0.4953
7919				200	0.6124
7920			M24	100	0.4997
7921				150	0.6671
7922				200	0.8346
7923				250	1.0020

LARGE BASE GLIDES (STEMS SWIVEL 15° IN ALL DIRECTIONS)

SS 304 STUD WITH GLASS-FILLED NYLON BASE

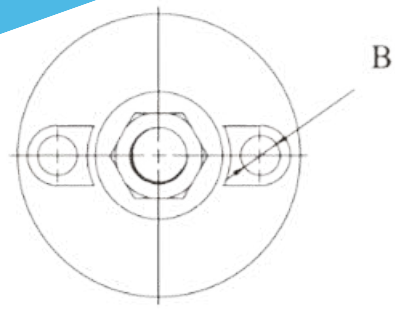

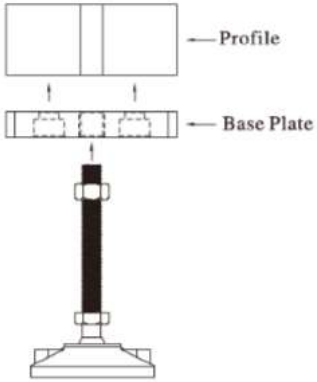

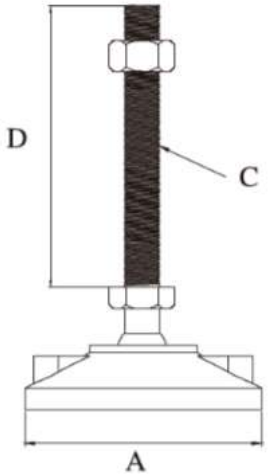

Part No	A	B	C	D	kg
7924	100E	14	M12	80	0.2057
7925				100	0.2221
7926				120	0.2385
7927			M16	80	0.3151
7928				100	0.3446
7929				120	0.3741
7930				150	0.4182
7931			M20	100	0.4327
7932				120	0.4795
7933				150	0.5498
7934				200	0.6669
7935			M24	100	0.5786
7936				120	0.6455
7937				150	0.7460
7938				200	0.9134
7939				250	1.0809

ECONOMY ANTI VIBRATION MOUNT

SS 304 STUD WITH SS304 STAMPING BASE

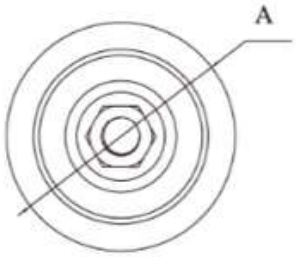

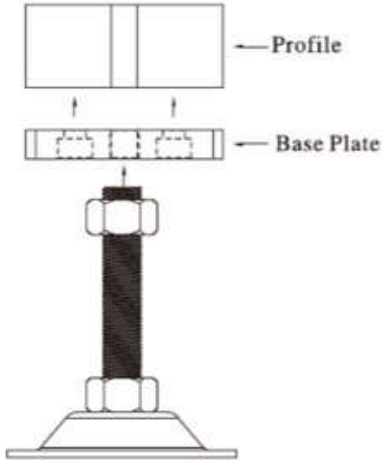

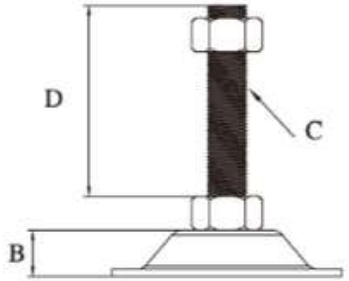

Part No	A	B	C	D	kg
7520	40M	9	M8	30	0.0468
7521				50	0.0537
7522				80	0.0642
7523			M10	50	0.0624
7524				80	0.0792
7525				100	0.0904
7526			M12	50	0.1079
7527				80	0.1325
7528				100	0.1489
7529				120	0.1653
7530	50E	11	M8	30	0.0579
7531				50	0.0648
7532				80	0.0752
7533			M10	50	0.0902
7534				80	0.1070
7535				100	0.1182
7536			M12	50	0.1163
7537				80	0.1409
7538				100	0.1573
7539				120	0.1737
7540	60E	13	M8	50	0.0778
7541				80	0.0882
7542				100	0.0952
7543			M10	50	0.1064
7544				80	0.1232
7545				100	0.1344
7546			M12	50	0.1310
7547				80	0.1556
7548				100	0.1720
7549				120	0.1884

SS 304 STUD WITH SS304 STAMPING BASE

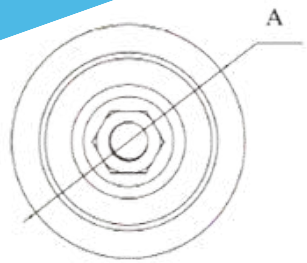

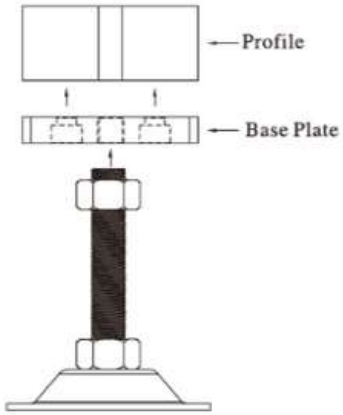

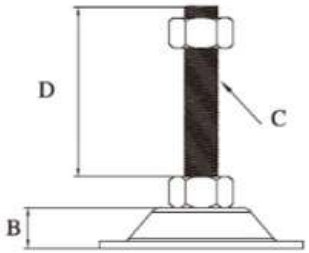

Part No	A	B	C	D	kg
7550	80M	16	M8	80	0.1376
7551				100	0.1445
7552			M10	80	0.1614
7553				100	0.1726
7554				120	0.1838
7555			M12	80	0.2018
7556				100	0.2182
7557				120	0.2346
7558				150	0.2592
7559			M16	80	0.2557
7560				100	0.2852
7561				120	0.3146
7562				150	0.3588
7563			M20	100	0.3711
7564				120	0.4179
7565				150	0.4882
7566				200	0.6053
7567			M24	100	0.4639
7568				150	0.6313
7569				200	0.7988
7570				250	0.9662

SS 304 STUD WITH SS304 STAMPING BASE

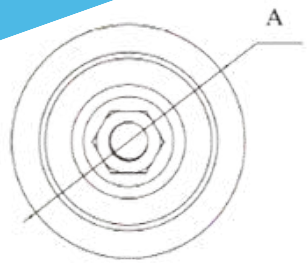

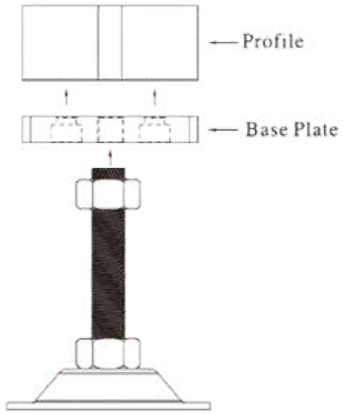

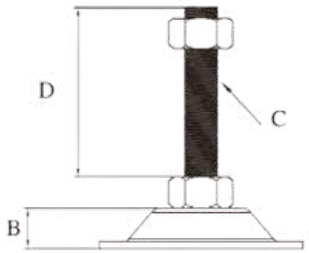

Part No	A	B	C	D	kg
7550	80M	16	M8	80	0.1376
7551				100	0.1445
7552			M10	80	0.1614
7553				100	0.1726
7554				120	0.1838
7555			M12	80	0.2018
7556				100	0.2182
7557				120	0.2346
7558				150	0.2592
7559			M16	80	0.2557
7560				100	0.2852
7561				120	0.3146
7562				150	0.3588
7563			M20	100	0.3711
7564				120	0.4179
7565				150	0.4882
7566				200	0.6053
7567			M24	100	0.4639
7568				150	0.6313
7569				200	0.7988
7570				250	0.9662

ECONOMY ANTI VIBRATION MOUNT

ZINC PLATED STUD WITH STEEL STAMPING BASED

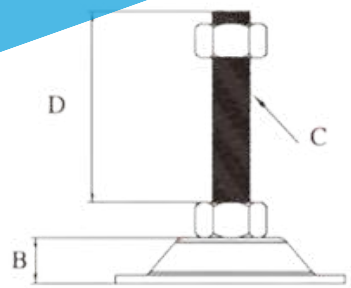

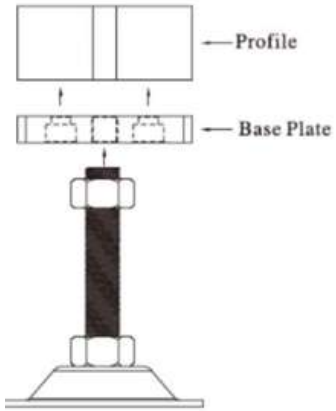

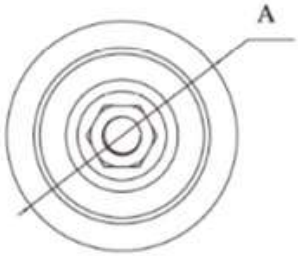

Part No	A	B	C	D	kg
7229	40L	8	M8	30	0.0465
7230				50	0.0533
7231				80	0.0635
7232			M10	50	0.0617
7233				80	0.0781
7234				100	0.0890
7235			M12	50	0.1069
7236				80	0.1309
7237				100	0.1469
7238				120	0.1628
7239	50L	10	M8	30	0.0576
7240				50	0.0644
7241				80	0.0745
7242			M10	50	0.0895
7243				80	0.1059
7244				100	0.1168
7245			M12	50	0.1153
7246				80	0.1393
7247				100	0.1553
7248				120	0.1712
7249	60L	12	M8	50	0.0774
7250				80	0.0875
7251				100	0.0943
7252			M10	50	0.1057
7253				80	0.1221
7254				100	0.1230
7255			M12	50	0.1300
7256				80	0.1540
7257				100	0.1700
7258				120	0.1859

ZINC PLATED STUD WITH STEEL STAMPING BASED

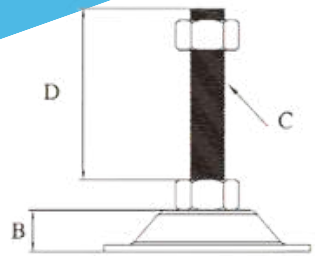

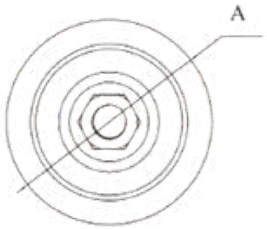

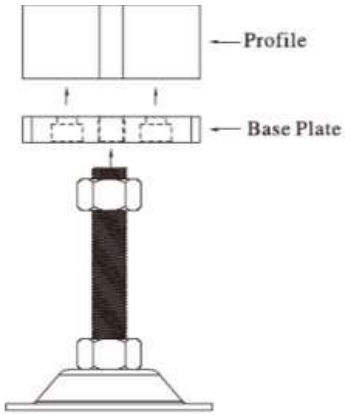

/Part No	A	B	C	D	kg
7259	80L	15	M8	80	0.1396
7260				100	0.1436
7261			M10	80	0.1614
7262				100	0.1712
7263				120	0.1821
7264			M12	80	0.2002
7265				100	0.2162
7266				120	0.2321
7267				150	0.2561
7268			M16	80	0.2528
7269				100	0.2815
7260				120	0.3102
7271				150	0.3533
7272			M20	100	0.3652
7273				120	0.4109
7274				150	0.4734
7275				200	0.5936
7276			M24	100	0.4555
7277				150	0.6187
7278				200	0.7821
7279				250	0.9453

ZINC PLATED STUD WITH STEEL STAMPING BASED

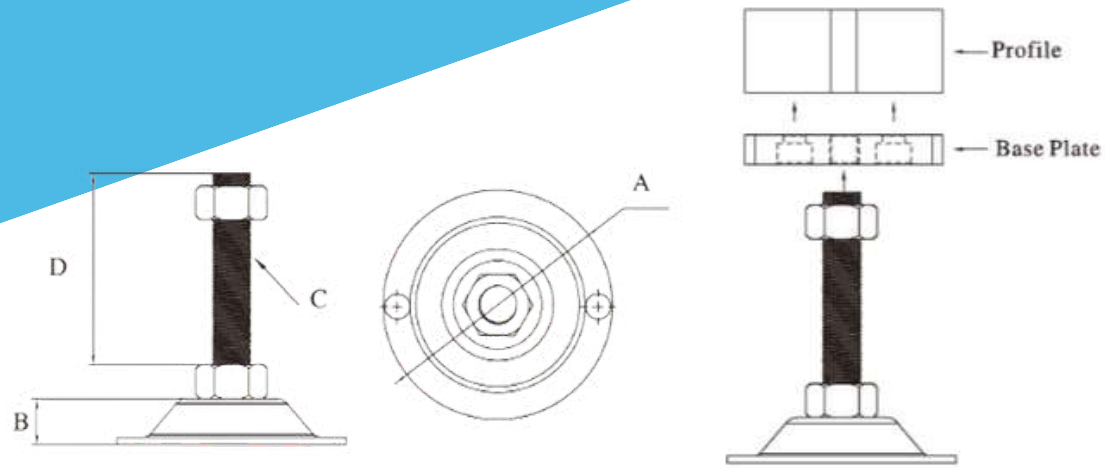

Part No	A	B	C	D	kg
7280	100L	17	M12	80	0.3069
7281				100	0.3229
7282				120	0.3388
7283			M16	80	0.3663
7284				100	0.3950
7285				120	0.4238
7286				150	0.4668
7287			M20	100	0.4943
7288				120	0.5400
7289				150	0.6085
7290				200	0.7227
7291			M24	100	0.6176
7292				120	0.6829
7293				150	0.7808
7294				200	0.9441
7295				250	1.1074

ZINC PLATED STUD WITH STEEL STAMPING BASED

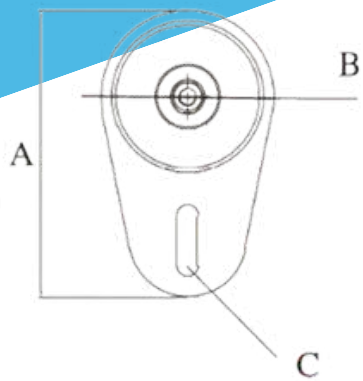

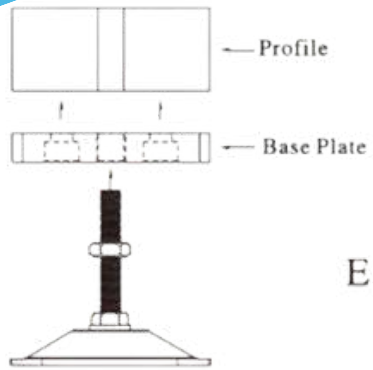

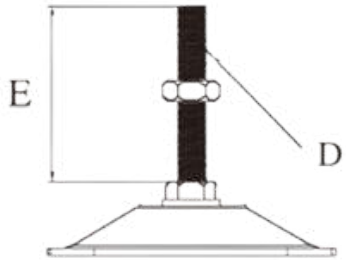

/Part No	A	B	C	D	E	kg
7296	136	80N	R5.1	M8	50	0.1636
7297					80	0.1738
7298					100	0.1805
7299				M10	80	0.1967
7300					100	0.2076
7301					120	0.2185
7302				M12	80	0.2227
7304					100	0.2387
7305					120	0.2547
7306					150	0.2787
7307				M16	80	0.2942
7308					100	0.3229
7309					120	0.3516
7310					150	0.2787
7311				M20	100	0.3648
7312					120	0.4104
7313					150	0.4561
7314					200	0.6388
7315				M24	100	0.5176
7316					120	0.5829
7317					150	0.6809
7318					200	0.8441

SS DELUXE LEVELING FOOT

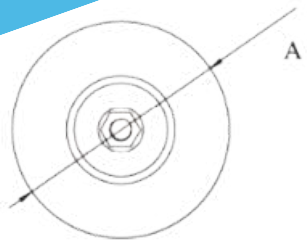

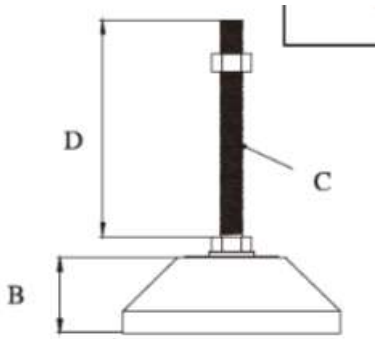

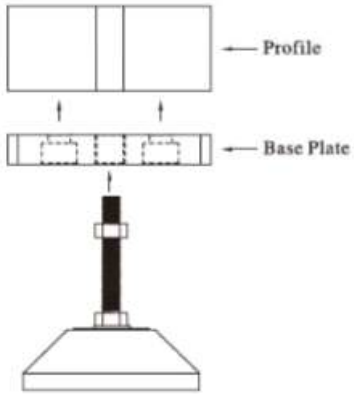

SS304 STUD WITH SS 304 BASED

Part No	A	B	C	D	kg
7587	40P	15.5	M6	30	0.0795
7588				50	0.0834
7589				80	0.0892
7590			M8	30	0.1005
7591				50	0.1251
7592				80	0.1415
7593			M10	50	0.1265
7594				80	0.1511
7595				100	0.1675
7596			M12	50	0.1515
7597				80	0.1761
7598				100	0.1925
7599				120	0.2089
7600	50P	22	M8	30	0.1837
7601				50	0.1906
7602				80	0.2010
7603			M10	50	0.2185
7604				80	0.2457
7605				100	0.2638
7606			M12	50	0.2576
7607				80	0.2926
7608				100	0.3160
7609				120	0.3229
7610	60P	20	M8	50	0.1973
7611				80	0.2077
7612				100	0.2147
7613			M10	50	0.2236
7614				80	0.2404
7615				100	0.2516
7616			M12	50	0.2492
7617				80	0.2738
7618				100	0.3066
7620				120	0.3312

SS304 STUD WITH SS 304 BASED

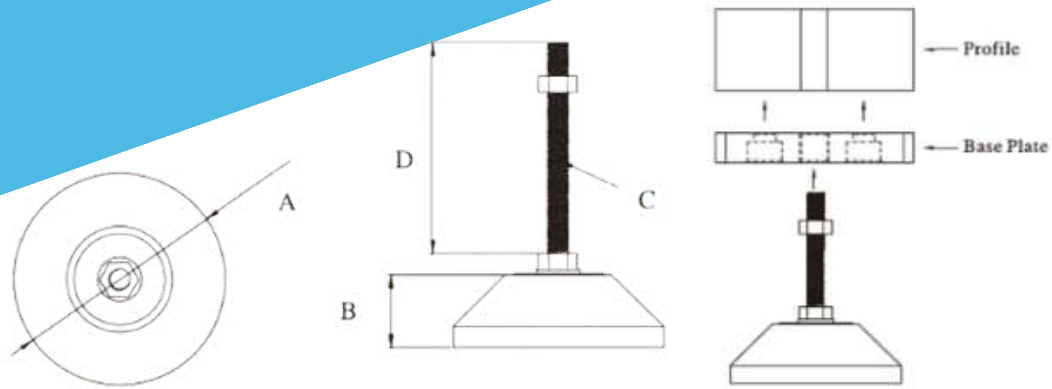

Part No	A	B	C	D	kg
7621	80P	22	M8	80	0.3582
7622				100	0.3721
7623			M10	80	0.4029
7624				100	0.4210
7625				120	0.4391
7626			M12	80	0.4498
7627				100	0.4732
7628				120	0.4965
7629				150	0.5316
7630			M16	80	0.5270
7631				100	0.5634
7632				120	0.5998
7634				150	0.6544
7635			M20	100	0.7103
7636				120	0.7641
7637				150	0.8448
7638				200	0.9793
7639			M24	100	0.9005
7640				150	1.0653
7641				200	1.2501
7642				250	1.3949

SS304 STUD WITH SS 304 BASED

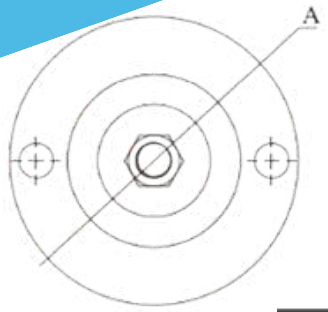

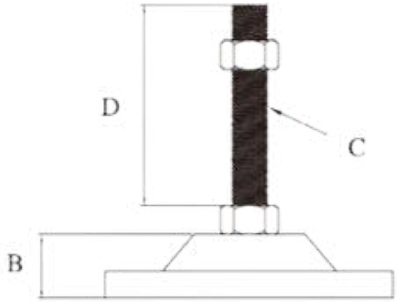

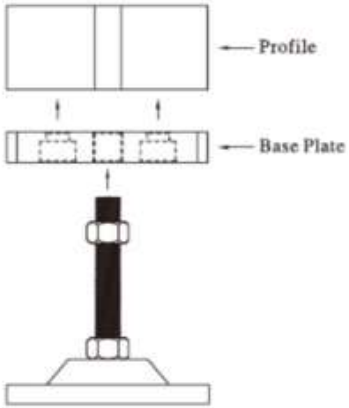

Part No	A	B	C	D	kg
7643	100Q	21.6	M12	80	0.5985
7644				100	0.6149
7645				120	0.6313
7646			M16	80	0.6611
7647				100	0.6906
7648				120	0.7201
7649				150	0.7642
7650			M20	100	0.7976
7651				120	0.8444
7652				150	0.9147
7653				200	1.0318
7654			M24	100	0.9077
7655				120	0.9746
7656				150	1.0751
7657				200	1.2425
7658				250	1.4100

SS304 STUD WITH SS 304 BASED

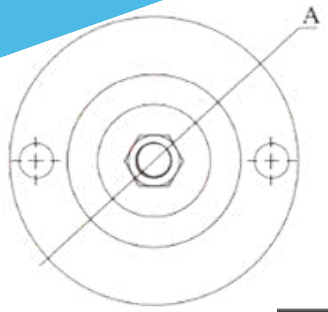

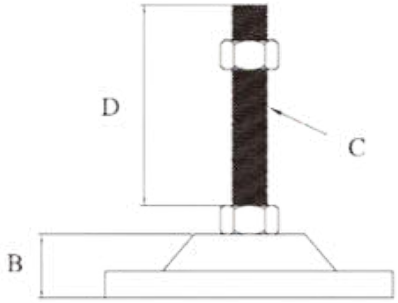

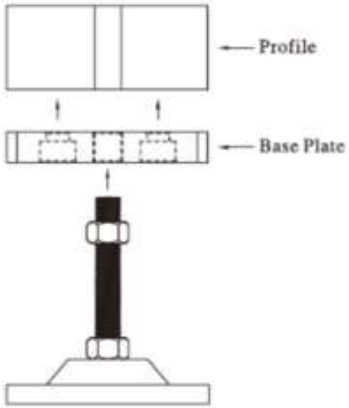

Part No	A	B	C	D	kg
7643	100Q	21.6	M12	80	0.5985
7644				100	0.6149
7645				120	0.6313
7646			M16	80	0.6611
7647				100	0.6906
7648				120	0.7201
7649				150	0.7642
7650			M20	100	0.7976
7651				120	0.8444
7652				150	0.9147
7653				200	1.0318
7654			M24	100	0.9077
7655				120	0.9746
7656				150	1.0751
7657				200	1.2425
7658				250	1.4100

SS304 STUD WITH SS 304 BASED+ CRASH PAD

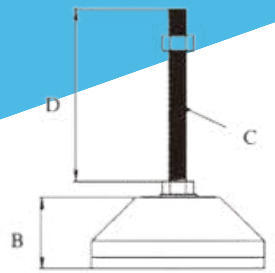

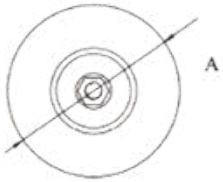

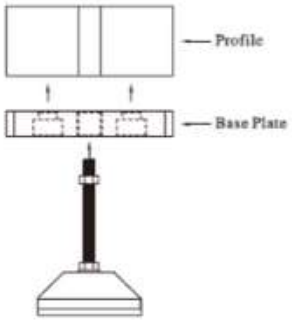

Part No	A	B	C	D	kg
7659	40P–B	21	M6	30	0.0815
7660				50	0.0854
7661				80	0.0912
7662			M8	30	0.1025
7663				50	0.1271
7664				80	0.1435
7665			M10	50	0.1285
7666				80	0.1531
7667				100	0.1695
7668			M12	50	0.1535
7669				80	0.1791
7670				100	0.1955
7671				120	0.2119
7672	50P–B	27	M8	30	0.1867
7673				50	0.1936
7674				80	0.2040
7675			M10	50	0.2215
7676				80	0.2487
7677				100	0.2668
7678			M12	50	0.2606
7679				80	0.2956
7680				100	0.3190
7681				120	0.3259
7682	60P–B	27.5	M8	50	0.2028
7683				80	0.2132
7684				100	0.2182
7685			M10	50	0.2271
7686				80	0.2439
7687				100	0.2551
7688			M12	50	0.2527
7689				80	0.2773
7690				100	0.3101
7691				120	0.3347

SS304 STUD WITH SS 304 BASED+ CRASH PAD

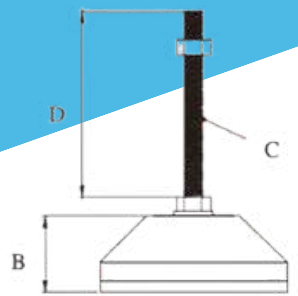

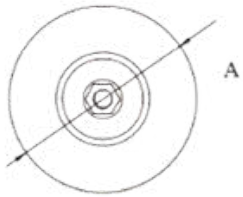

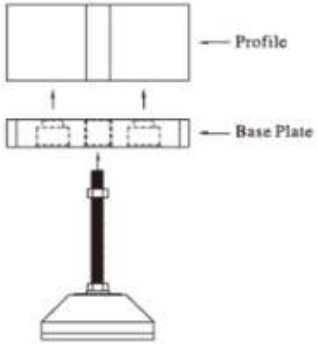

Part No	A	B	C	D	kg
7692	80P–B	30.5	M8	80	0.3622
7693				100	0.3761
7694			M10	80	0.4069
7695				100	0.4250
7699				120	0.4431
7700			M12	80	0.4538
7701				100	0.4772
7702				120	0.5005
7703				150	0.5356
7704			M16	80	0.5310
7705				100	0.5674
7706				120	0.6038
7707				150	0.6584
7708			M20	100	0.7143
7709				120	0.7681
7710				150	0.8488
7712				200	0.9833
7713			M24	100	0.9045
7714				150	1.0693
7715				200	1.2541
7716				250	1.3989

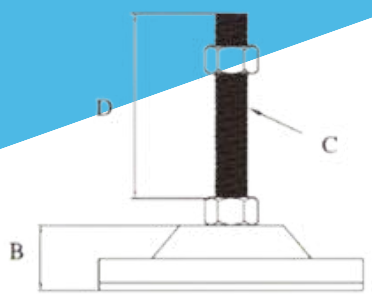

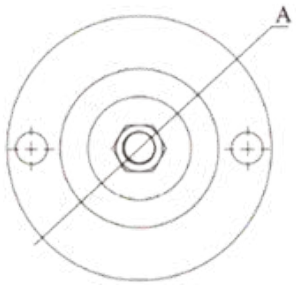

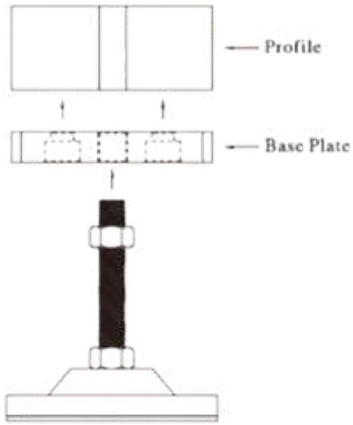

SS304 STUD WITH SS 304 BASED+ CRASH PAD

/Part No	A	B	C	D	kg
7717	100Q–B	28	M12	80	0.6045
7718				100	0.6209
7719				120	0.6373
7720			M16	80	0.6671
7721				100	0.6966
7722				120	0.7261
7723				150	0.7702
7724			M20	100	0.8036
7725				120	0.8504
7726				150	0.9207
7727				200	1.0378
7728			M24	100	0.9137
7729				120	0.9806
7730				150	1.0811
7731				200	1.2485
7732				250	1.4160

SS DELUXE LEVELING FOOT(STEMS SWIVEL 15° IN ALL DIRECTIONS)

SS304 STUD WITH SS 304 BASED

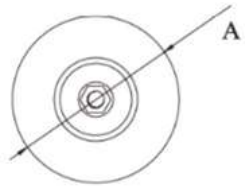

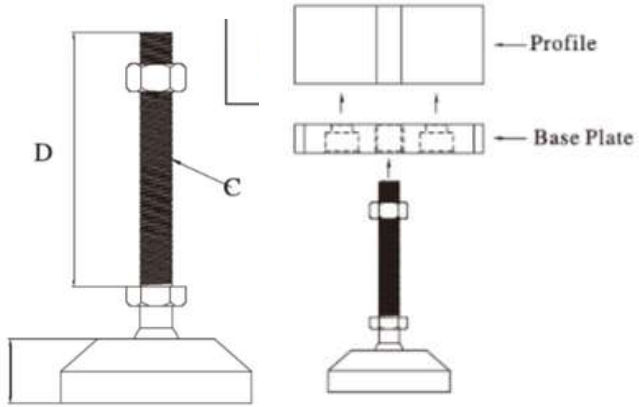

Part No	A	B	C	D	kg
7733	40R	18.5	M8	30	0.1005
7734				50	0.1251
7735				80	0.1415
7736			M10	50	0.1265
7737				80	0.1511
7738				100	0.1675
7739			M12	50	0.1515
7740				80	0.1761
7741				100	0.1925
7742				120	0.2089
7743	50R	19.5	M8	30	0.1837
7744				50	0.1906
7745				80	0.2010
7746			M10	50	0.2185
7747				80	0.2457
7748				100	0.2638
7749			M12	50	0.2576
7750				80	0.2926
7751				100	0.3160
7752				120	0.3229
7754	60R	20	M8	50	0.1973
7755				80	0.2077
7756				100	0.2147
7757			M10	50	0.2236
7758				80	0.2404
7759				100	0.2516
7760			M12	50	0.2492
7761				80	0.2738
7762				100	0.3066
7763				120	0.3312

SS304 STUD WITH SS 304 BASED

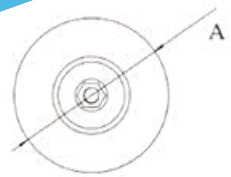

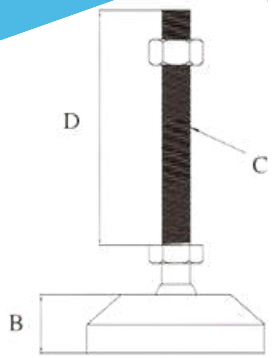

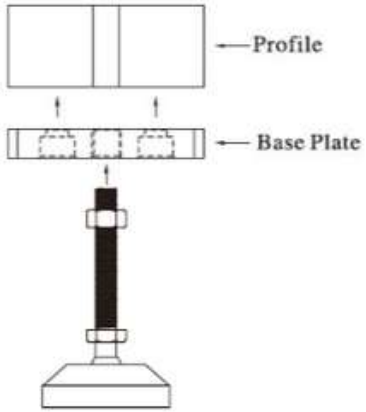

Part No	A	B	C	D	kg
7764	80R	20	M8	80	0.3582
7765				100	0.3721
7766			M10	80	0.4029
7767				100	0.4210
7768				120	0.4391
7769			M12	80	0.4498
7770				100	0.4732
7771				120	0.4965
7772				150	0.5316
7773			M16	80	0.5270
7774				100	0.5634
7775				120	0.5998
7776				150	0.6544
7777			M20	100	0.7103
7778				120	0.7641
7779				150	0.8448
7780				200	0.9793
7781			M24	100	0.9005
7782				150	1.0653
7783				200	1.2501
7784				250	1.3949

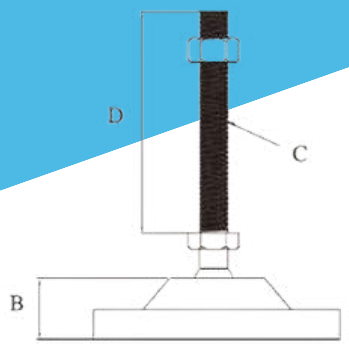

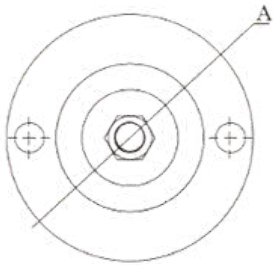

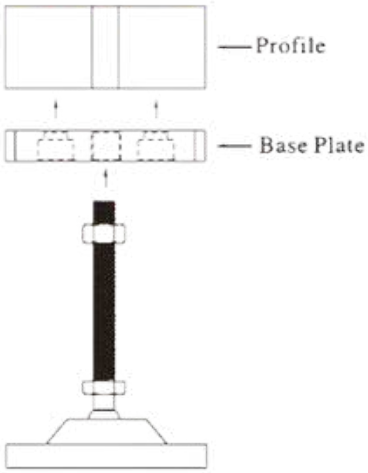

SS304 STUD WITH SS 304 BASED

Part No	A	B	C	D	kg
7785	100S	25.5	M12	80	0.5985
7786				100	0.6149
7787				120	0.6313
7788			M16	80	0.6611
7789				100	0.6906
7790				120	0.7201
7791				150	0.7642
7792			M20	100	0.7976
7793				120	0.8444
7794				150	0.9147
7795				200	1.0318
7796			M24	100	0.9077
7797				120	0.9746
7798				150	1.0751
7799				200	1.2425
7800				250	1.4100

C.S DELUXE LEVELING FOOT

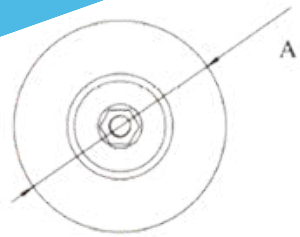

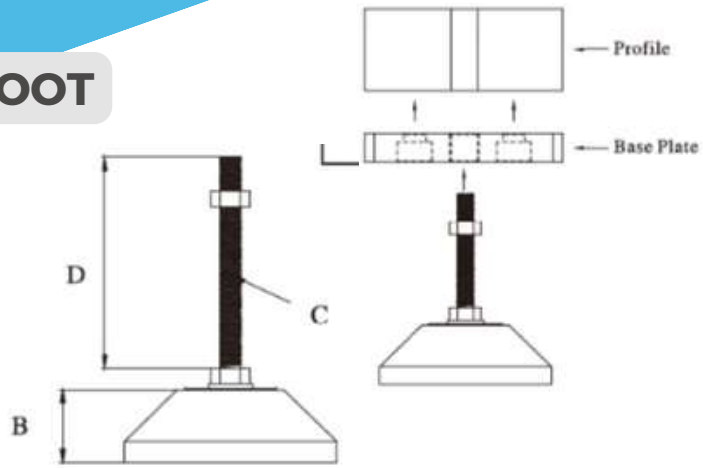

C.S STUD WITH C.S BASE

Part No	A	B	C	D	kg
7319	40H	20.5	M8	30	0.0952
7320				50	0.1197
7321				80	0.1208
7322			M10	50	0.1208
7323				80	0.1450
7324				100	0.1611
7325			M12	50	0.1455
7326				80	0.1609
7327				100	0.1741
7328				120	0.1900
7329	50H	21	M8	30	0.1777
7330				50	0.1846
7331				80	0.1950
7332			M10	50	0.2125
7333				80	0.2397
7334				100	0.2578
7335			M12	50	0.2516
7336				80	0.2866
7337				100	0.3100
7338				120	0.3160
7339	60H	21	M8	50	0.1889
7340				80	0.1990
7341				100	0.2258
7342			M10	50	0.2149
7343				80	0.2313
7344				100	0.2422
7345			M12	50	0.2402
7346				80	0.2643
7347				100	0.2966
7348				120	0.3207

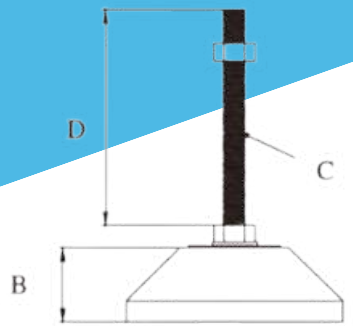

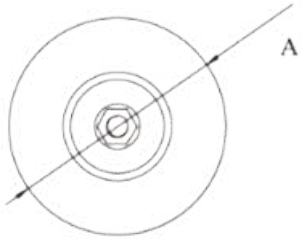

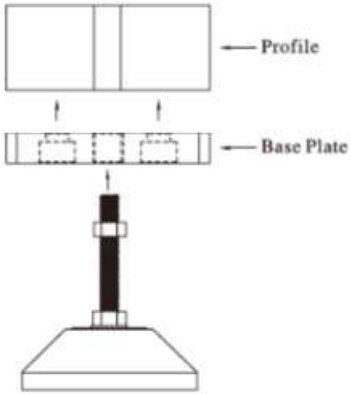

C.S STUD WITH C.S BASE

Part No	A	B	C	D	kg
7349	80H	23.5	M8	80	0.3475
7350				100	0.3612
7351			M10	80	0.3918
7352				100	0.4096
7353				120	0.4274
7354			M12	80	0.4382
7355				100	0.4612
7356				120	0.4840
7357				150	0.5185
7358			M16	80	0.5141
7359				100	0.5497
7360				120	0.5854
7361				150	0.6389
7362			M20	100	0.6944
7363				120	0.7471
7364				150	0.8260
7365				200	0.9576
7366			M24	100	0.8821
7367				150	1.0427
7368				200	1.2234
7369				250	1.3640

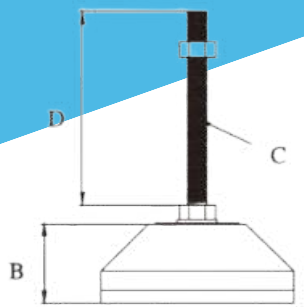

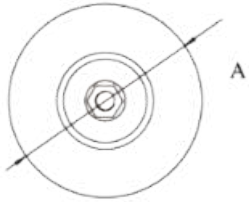

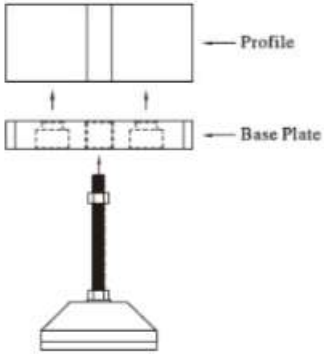

C.S STUD WITH C.S BASE+CRASH PAD

Part No	A	B	C	D	kg
7483	80H–B	18.5	M8	80	0.3425
7484				100	0.3562
7485			M10	80	0.3868
7486				100	0.4046
7487				120	0.4244
7488			M12	80	0.4332
7489				100	0.4562
7490				120	0.4790
7491				150	0.5135
7492			M16	80	0.5091
7493				100	0.5447
7494				120	0.5804
7495				150	0.6339
7496			M20	100	0.6894
7497				120	0.7431
7498				150	0.8210
7499				200	0.9526
7500			M24	100	0.8771
7501				150	1.0377
7502				200	1.2194
7503				250	1.3590

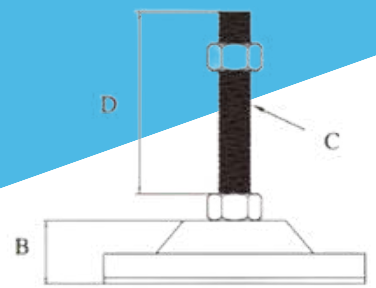

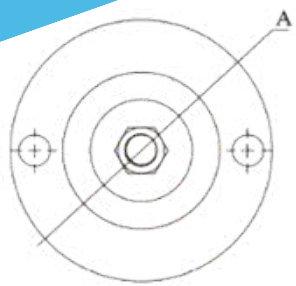

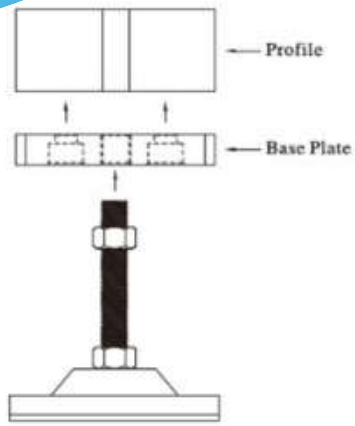

C.S STUD WITH C.S BASE+CRASH PAD

Part No	A	B	C	D	kg
7504	100I–B	23	M12	80	0.5789
7505				100	0.5949
7506				120	0.6108
7507			M16	80	0.6402
7508				100	0.6689
7509				120	0.6977
7510				150	0.7407
7511			M20	100	0.7737
7512				120	0.8194
7513				150	0.8879
7514				200	1.0021
7515			M24	100	0.8813
7516				120	0.9466
7517				150	1.0445
7518				200	1.2078
7519				250	1.3711

C.S DELUXE LEVELING FOOT(STEMS SWIVEL 15° IN ALL DIRECTIONS)

C.S STUD WITH C.S BASE/NICKED PLATED

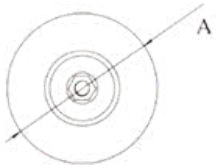

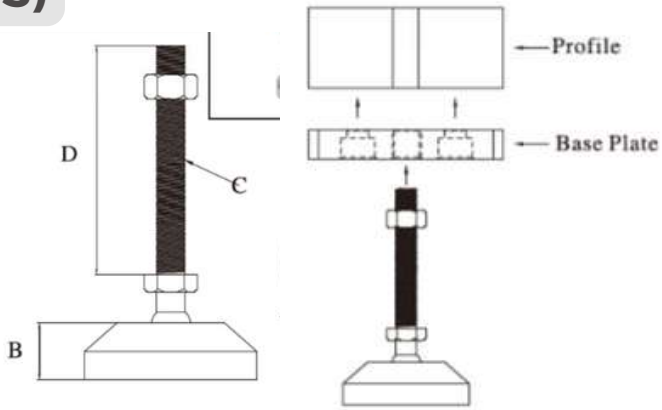

Part No	A	B	C	D	kg
7386	40J	26	M8	30	0.0952
7387				50	0.1197
7388				80	0.1208
7389			M10	50	0.1208
7390				80	0.1450
7391				100	0.1611
7392			M12	50	0.1455
7393				80	0.1609
7394				100	0.1741
7395				120	0.1900
7396	50J	27	M8	30	0.1777
7397				50	0.1846
7398				80	0.1950
7399			M10	50	0.2125
7400				80	0.2397
7401				100	0.2578
7402			M12	50	0.2516
7403				80	0.2866
7404				100	0.3100
7405				120	0.3160
7682	60J	30	M8	50	0.1889
7683				80	0.1990
7684				100	0.2258
7685			M10	50	0.2149
7686				80	0.2313
7687				100	0.2422
7688			M12	50	0.2402
7689				80	0.2643
7690				100	0.2966
7691				120	0.3207

C.S STUD WITH C.S BASE/NICKED PLATED

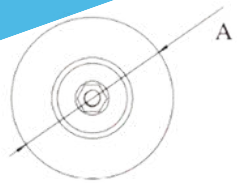

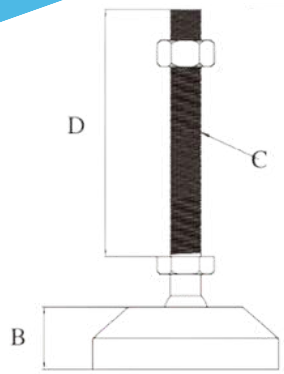

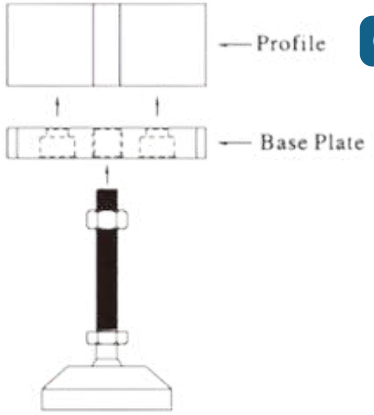

Part No	A	B	C	D	kg
7416	80J	31	M8	80	0.3475
7417				100	0.3612
7418			M10	80	0.3918
7419				100	0.4096
7420				120	0.4274
7421			M12	80	0.4382
7422				100	0.4612
7423				120	0.4840
7424				150	0.5185
7704			M16	80	0.5141
7425				100	0.5497
7426				120	0.5854
7427				150	0.6389
7428			M20	100	0.6944
7429				120	0.7471
7430				150	0.8260
7431				200	0.9576
7432			M24	100	0.8821
7434				150	1.0427
7435				200	1.2234
7436				250	1.3640

THREADED STEM SWIVEL CASTERS

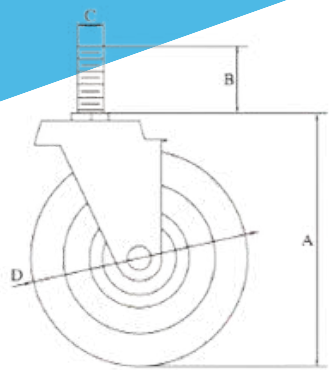

ZINC PLATED STEEL BRACKET & BLACK POWDER COAT STEEL BRACKET W/SOFT RUBBER WHEEL

20, 30, 40 AND 45 SERIES COMPATIBLE
MOUNTS DIRECTLY TO PROFILE ENDS
MAXIMUM LOAD CAPACITY RANGES FROM 50-100KG

/Part No	A	B	C	D	Brack	/Max.Load kg	kg
7178	65.5	15	M8	ϕ50	No	50	0.146
7179	94	30	M12	ϕ75	No	75	0.324
7180	117	31	M12	ϕ100	No	100	0.485
7181	71.5	25	M10	ϕ50	No	50	0.208
7182	105	30	M12	ϕ75	No	50	0.546

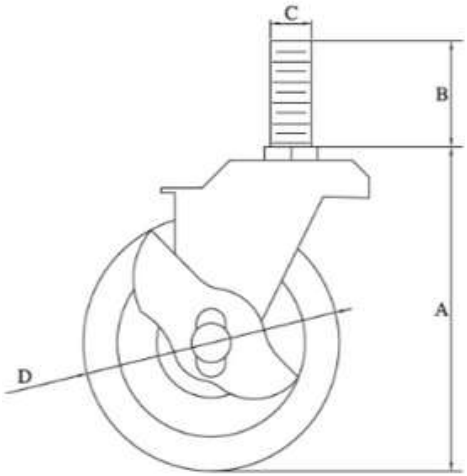

ZINC PLATED STEEL BRACKET W/SOFT RUBBER WHEEL

Part No	A	B	C	D	Brack	/Max.Load kg	kg
7183	67	15	M8	ϕ50	Yes	50	0.160
7184	95	31	M12	ϕ75	Yes	75	0.345
7185	116.5	31	M12	ϕ100	Yes	100	0.498

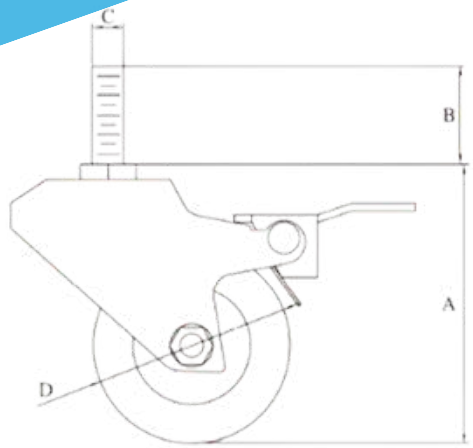

ZINC PLATED STEEL BRACKET W/SOFT RUBBER WHEEL

/Part No	A	B	C	D	/Brack	/Max.Load kg	kg
7186	71.5	25	M8	ϕ50	Yes	50	0.258
7187	105	30	M12	ϕ75	Yes	75	0.691

FANGLE MOUNT CASTERS

BLACK POWDER COAT STEEL BRACKET W/SOFT RUBBER WHEEL

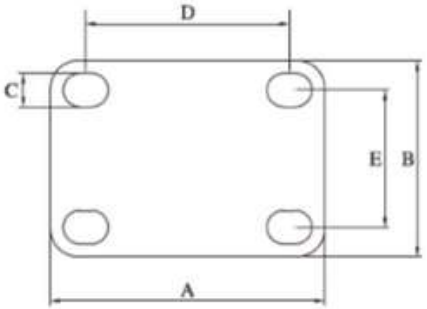

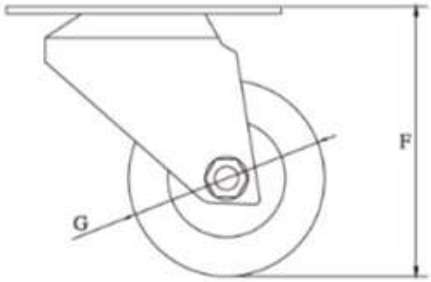

Part No	A	B	C	D	E	F	G	/Brack	J	/Max.Load kg	kg
7188	70	50	8.5	55	35	69	ϕ50	No		95	0.232

BLACK POWDER COAT STEEL BRACKET W/SOFT RUBBER WHEEL

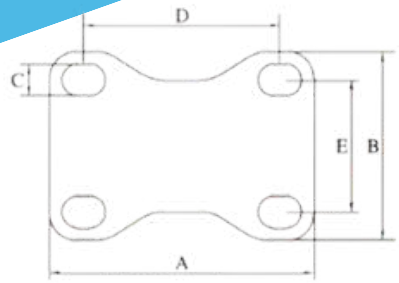

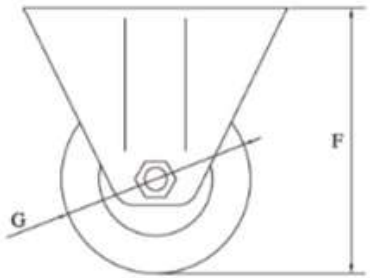

/Part No	A	B	C	D	E	F	G	Brack	Max.Load kg	kg
7189	70	50	8.5	52	35	70.5	ϕ50	No	95	0.174

BLACK POWDER COAT STEEL BRACKET W/SOFT RUBBER WHEEL

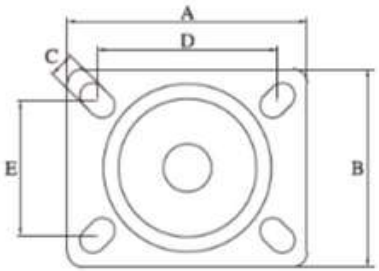

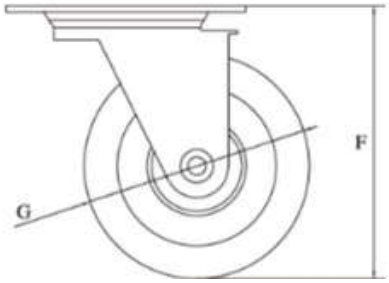

Part No	A	B	C	D	E	F	G	Brack	t/Max.Load kg	kg
7190	80	66	8.5	60	45	91	ϕ75	No	100	0.355
7191	100	82	8.5	80	60	125	ϕ100	No	125	0.698

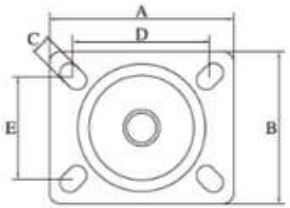

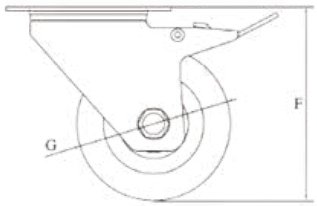

ZINC PLATED STEEL BRACKET W/SOFT RUBBER WHEEL

Part No	A	B	C	D	E	F	G	Brack	Max.Load kg	kg
7192	81	67	8.5	60	45	95	ϕ75	Yes	110	0.474
7193	100	82	8.5	80	60	125	ϕ100	Yes	125	0.852

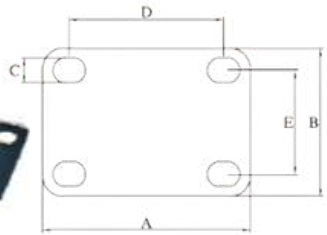

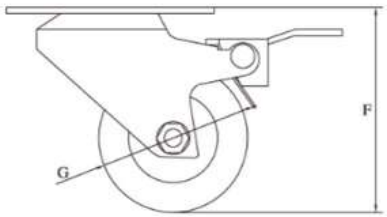

BLACK POWDER COAT STEEL BRACKET W/SOFT RUBBER WHEEL

Part No	A	B	C	D	E	F	G	Brack	Max.Load kg	kg
7194	70	50	8.5	52	35	69	ϕ50	Yes	95	0.284
7195	93.6	65	8.5	72	45	103	ϕ75	Yes	110	0.774

4 INCHE WHEEL

FREE SPINNING NYLON RIM + PURE RUBBER TYRE

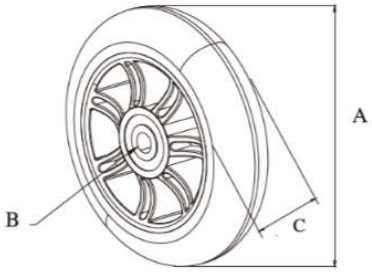

/Part No	A	B	C	kg
ML-1045	4"	ϕ8.1	24	0.124

4 INCHE WHEEL HOUSE

INJECTION MOLDING PA66+GF30

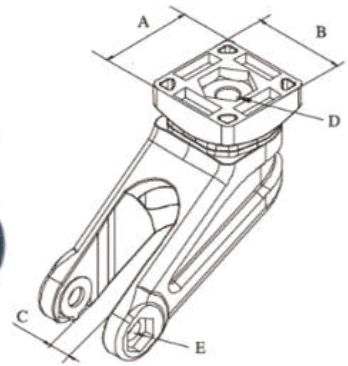

Part No	A	B	C	D	E	kg
ML-1046+1047-8	40	40	24.5	ϕ8	ϕ8.5	0.122
ML-1046+1047-10	40	40	24.5	ϕ8	ϕ8.5	0.122

7 INCHE WHEEL

FREE SPINNING NYLON RIM + PURE RUBBER TYRE

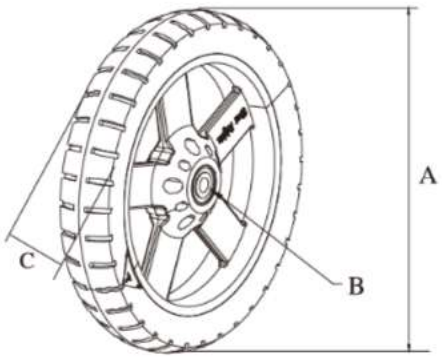

Part No	A	B	C	kg
ML-1039	7"	ϕ8	32	0.350

7 INCHE WHEEL HOUSE

INJECTION MOLDING PA66+GF30

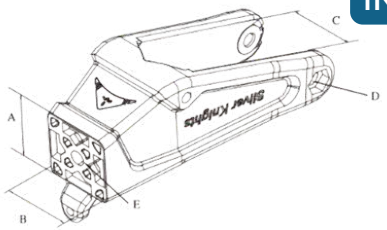

Part No	A	B	C	D	E	kg
ML-1040-8	40	40	34.2	ϕ9	ϕ8.3	0.171
ML-1040-10	40	40	34.2	ϕ9	ϕ8.3	0.171

AXLECLAMP

INJECTION MOLDING PA66+GF30

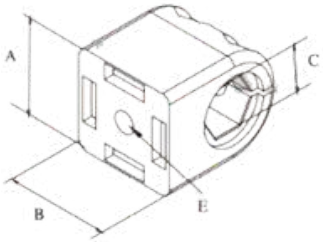

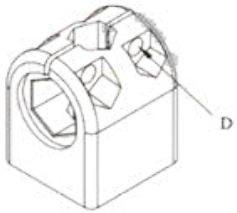

Part No	A	B	C	D	E	kg	Compatibility Code
ML-1020-8	40	40	19.5	ϕ6.2	ϕ8.3	0.082	40-8
ML-1020-10	40	40	19.5	ϕ6.2	ϕ8.3	0.082	40-10

13 INCHE TYRE WITH AIR PRESSURE

DRIVEN NYLON RIM+IIR INFLATABLE INNER TUBE+NR

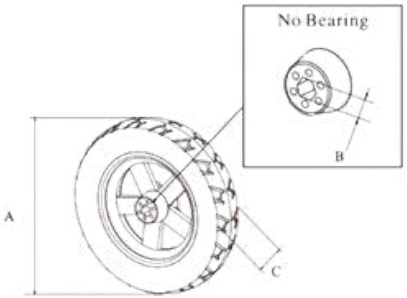

Part No	A	B	C	Bearing	kg
ML-1037	13"	19.2	68	NO	1.327

FREE SPINNING NYLON RIM+IIR INFLATABLE INNER TUBE+NR TIRE

Part No	A	B	C	Bearing	kg
ML-1038	13"	19.2	68	Yes	1.435

WHEEL LOCK RING

AI, ONC MANUFACTURE, BLACK ANODIZING

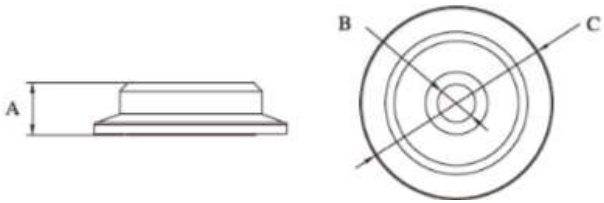

Part No	A	B	C	kg
ML-1061	11.7	ϕ 8.3	ϕ 42	0.0245

END CAP WITH PUSH IN FASTENER

DIE CAST ALUMINIUM, MULTI COLOR POWDER COATING

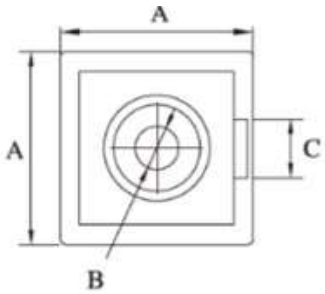

Part No	A	B	C	kg	Compatibility Code
4191	20	ϕ 4.5	6.1	0.003	GB 2020
4193	30	ϕ 7	6.1	0.007	GB 3030
4195	40	ϕ 9	8.1	0.014	GB 4040

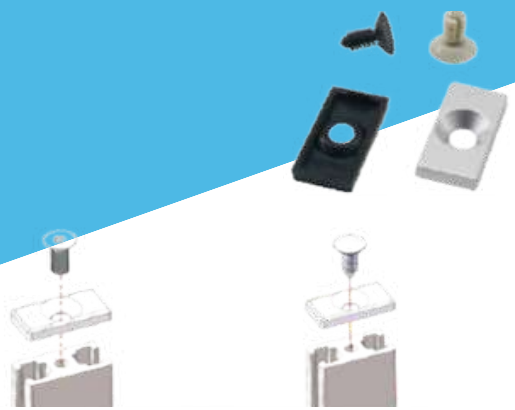

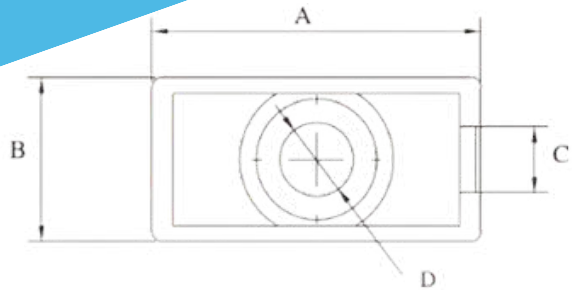

DIE CAST ALUMINIUM, MULTI COLOR POWDER COATING

Part No	A	B	C	D	kg	Compatibility Code
4190	30	15	6.1	ϕ 6.5	0.003	GB 1530
4192	40	20	8.1	ϕ 8.5	0.006	GB 2040

DIE CAST ALUMINIUM, MULTI COLOR POWDER COATING

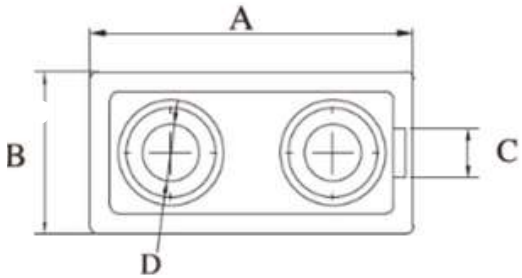

Part No	A	B	C	D	kg	Compatibility Code
4194	60	30	8.1	ϕ 7	0.012	GB 3060
4196	80	40	8.1	ϕ 9	0.029	GB 4080

DIE CAST ALUMINIUM, MULTI COLOR POWDER COATING

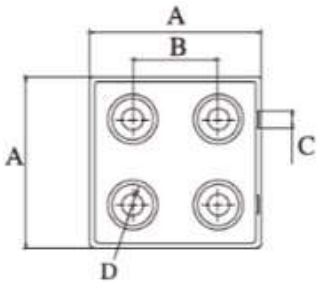

Part No	A	B	C	D	kg	Compatibility Code
4197	60	30	8.1	ϕ 7	0.022	GB 6060
4198	80	40	8.1	ϕ 9	0.054	GB 8080

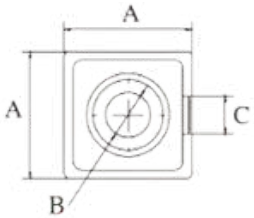

DIE CAST ALUMINIUM, MULTI COLOR POWDER COATING

Part No	A	B	C	kg	Compatibility Code
4169	20	ϕ 7	6.1	0.003	OB 2020
4171	25	ϕ 7	6.1	0.005	OB 2525
4174	30	ϕ 9	8.1	0.007	OB 3030
4177	40	ϕ 9	8.1	0.013	OB 4040
4180	45	ϕ12.5	10.1	0.021	OB 4545
4183	50	ϕ12.5	10.1	0.027	OB 5050
4186	60	ϕ12.5	10.1	0.039	OB 6060B

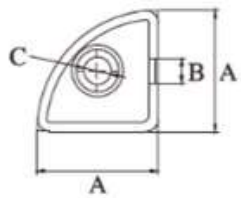

DIE CAST ALUMINIUM, MULTI COLOR POWDER COATING

Part No	A	B	C	kg	Compatibility Code
4172	25	ϕ 7	6.1	0.004	OB 2525R
4175	30	ϕ 9	8.1	0.005	OB 3030R
4178	40	ϕ 9	8.1	0.010	OB 4040R
4181	45	ϕ 12.5	10.1	0.017	OB 4545R

END CAPS

NYLON, BLACK, GRAY WHITE

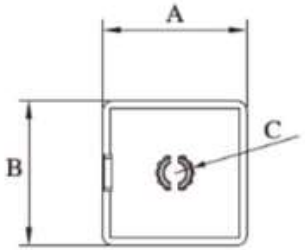

Part No	A	B	C	kg	Compatibility Code
4001	20	20	ϕ5.2	0.001	OB2020A
4036	25	25	ϕ5.2	0.002	OB2525A
4002	30	30	ϕ7.2	0.003	OB3030A
4003	40	40	ϕ7.2	0.005	OB4040A
4066	60	40	ϕ7.2	0.007	OB4060A
4004	45	45	ϕ10.2	0.006	OB4545A
4074	60	45	ϕ10.2	0.007	OB4560A
4005	50	50	ϕ10.2	0.008	OB5050A
4006	60	60	ϕ10.2	0.012	OB6060B

NYLON, BLACK, GRAY WHITE

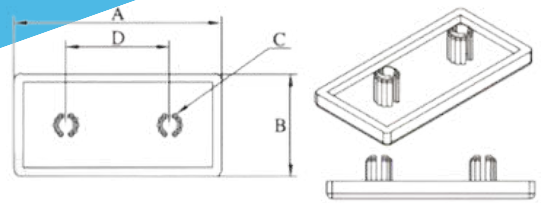

Part No	A	B	C	D	kg	Compatibility Code
4075	40	16	ϕ5.2	29.3	0.002	OB1640A
4096	40	16	ϕ5.2	28.2	0.002	OB1640B
4007	40	20	ϕ5.2	20	0.003	OB2040A
4047	80	20	ϕ5.2	60	0.005	OB2080A
4076	50	25	ϕ5.2	25	0.003	OB2550A
4008	60	30	ϕ7.2	30	0.005	OB3060A
4077	90	30	ϕ7.2	60	0.008	OB3090A
4009	80	40	ϕ7.2	40	0.012	OB4080A
4046	120	40	ϕ7.2	80	0.013	OB40120A
4079	160	40	ϕ7.2	120	0.014	OB40160A
4010	90	45	ϕ10.2	45	0.015	OB4590A
4011	100	50	ϕ10.2	50	0.017	OB50100A

NYLON, BLACK, GRAY WHITE

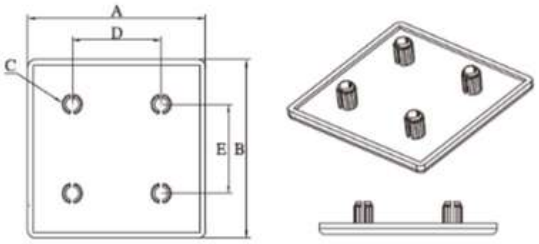

Part No	A	B	C	D	E	kg	Compatibility Code
4015	60	60	ϕ7.2	30	30	0.012	OB6060A
4080	90	60	ϕ7.2	60	30	0.013	OB6090A
4081	120	60	ϕ7.2	90	30	0.015	OB60120A
4016	80	80	ϕ7.2	40	40	0.22	OB8080A
4082	120	80	ϕ7.2	80	40	0.021	OB80120A
4083	160	80	ϕ7.2	120	40	0.022	OB80160A
4017	90	90	ϕ10.2	45	45	0.024	OB9090A
4018	100	100	ϕ12.2	50	50	0.029	OB100100A
4084	100	100	ϕ10.2	50	50	0.024	OB100100B

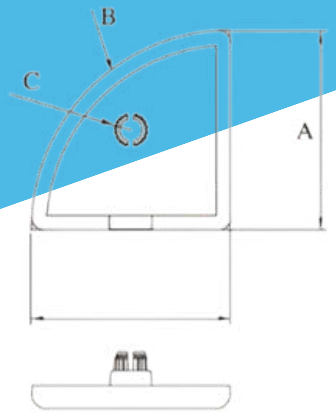

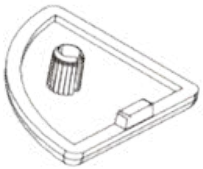

NYLON, BLACK, GRAY WHITE

Part No	A	B	C	kg	Compatibility Code
4092	30	R25	ϕ7.2	0.003	OB3030-25R
4012	30	R30	ϕ7.2	0.003	OB3030R
4013	40	R40	ϕ7.2	0.005	OB4040R
4014	45	R45	ϕ10.2	0.007	OB4545R
4098	20	R20	ϕ5.2	0.001	OB2020R
4097	25	R25	ϕ5.2	0.002	OB2525R

STANDARD T-SLOT COVERS

PP OR PVC MATERIAL BLACK, WHITE, GRAY, YELLOW, RED, BLUE, GREN

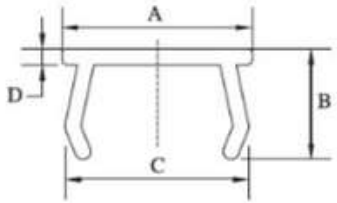

Part No	A	B	C	D	kg/m	Compatibility Code
4037	7.3	5	7	1	0.008	6A
4038	10.2	6	9.5	1	0.019	8A
4040	12.2	6.5	11.5	1	0.021	10A

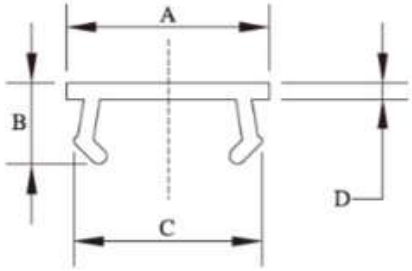

Part No	A	B	C	D	kg/m	Compatibility Code
4039	9.5	4	9	1	0.008	GB-8B

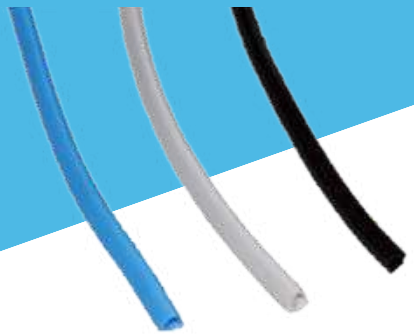

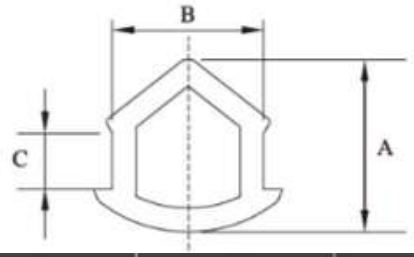

PVC MATERIAL BLACK, GRAY, BLUE

Part No	A	B	C	kg/m	Compatibility Code
4041	8	7	2.5	0.025	6C
4042	10	9	4	0.046	8C
4043	12	10.5	4	0.065	10C

T-SLOT TREAD STRIP

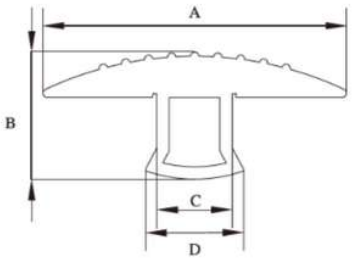

RUBBER, PANEL GASKET

Part No	A	B	C	D	kg/m	Compatibility Code
4116	17	9.5	6	9	0.087	20A
4117	27	13.5	8.6	11	0.162	30A
4118	37	15.5	9.5	12	0.219	40A
4119	41	17	11	14	0.221	45A

T-SLOT GROOVE BELT

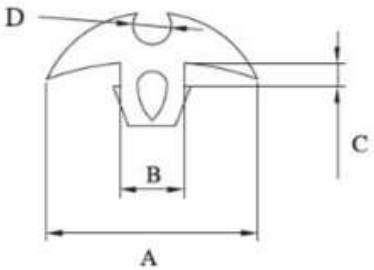

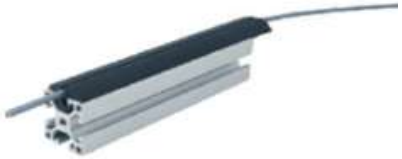

RUBBER, PANEL GASKET

Part No	A	B	C	D	kg / m	Compatibility Code
ML-1052	36	10.6	5	ϕ 9	0.3	40B

CABLE & TUBECLIP

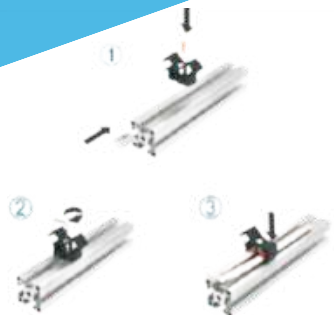

FIBER GLASS REINFORCED NYLON BLACK

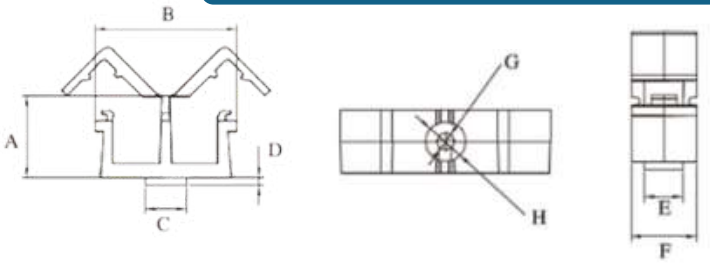

Part No	A	B	C	D	E	F	G	H	kg	Compatibility Code
4152	20.4	25.9	8	2	16.2	8	ϕ 4.3	ϕ 10	0.0050	30B
4153	20.5	35.4	8.1	2	16.2	7.6	ϕ 4.3	ϕ 10	0.0071	40B
4154	20.5	35.4	10.2	2	16.2	9.6	ϕ 4.3	ϕ 10	0.0072	45B

DROP IN CABLE & TUBECLIP

FIBER GLASS REINFORCED NYLON BLACK

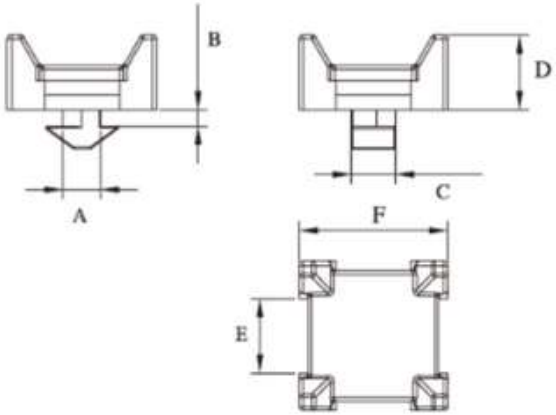

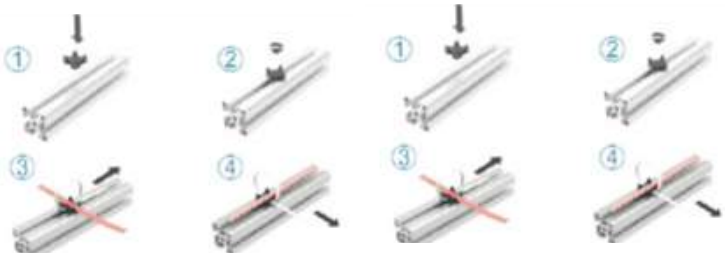

Part No	A	B	C	D	E	F	kg	Compatibility Code
4159	5	2.3	5.9	10	10	20	0.0024	20D
4160	8.1	2	7.6	10	10.1	22.2	0.0030	30D
4161	8.1	4.5	7.6	11.1	10.1	22.2	0.0032	40D
4162	10.1	4.5	9.6	11.1	10.1	22.2	0.0037	45D
4163	10.1	6.3	9.6	11.1	10.1	22.2	0.0038	45D–2

LINE D28 FROM MSR-FASTER & EASIER THAN EVER BEFORE

FIBER GLASS REINFORCED NYLON BLACK

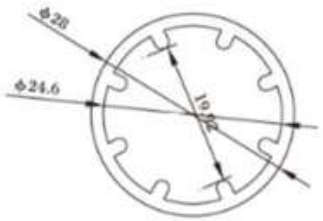

Part No	8165/D28F
Material	6105–T5
Finish	Clear anodized
Weight Per Meter	0.50Kg/m

Part No	8166/D28G
Material	6105–T5
Finish	Clear anodized
Weight Per Meter	0.45kg/m

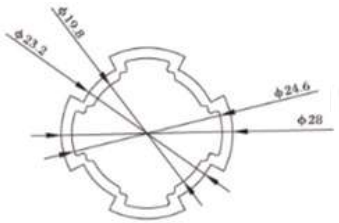

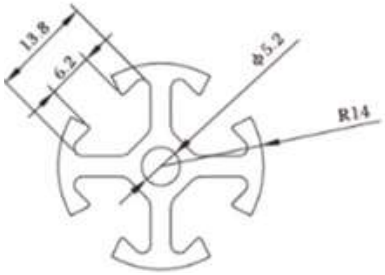

Part No	8167/D28H
Material	6105–T5
Finish	Clear anodized
Weight Per Meter	0.72kg/m

STAIRWAY ASSEMBLY SET GP 30°

STEEL GRAY POWDER COATING

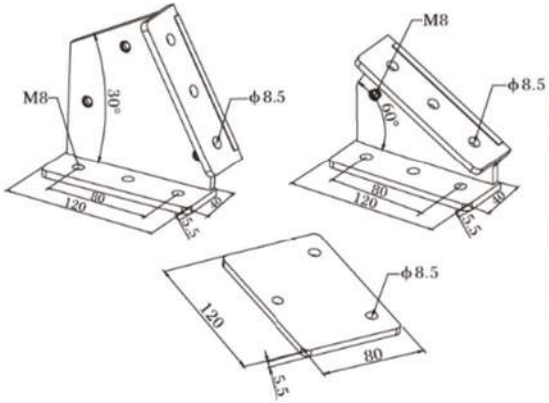

Part No	配件说明/Fitting & Description	kg	Compatibility Code
1201	----	4.2	30°

STAIRWAY ASSEMBLY SET GP 38°

STEEL GRAY POWDER COATING

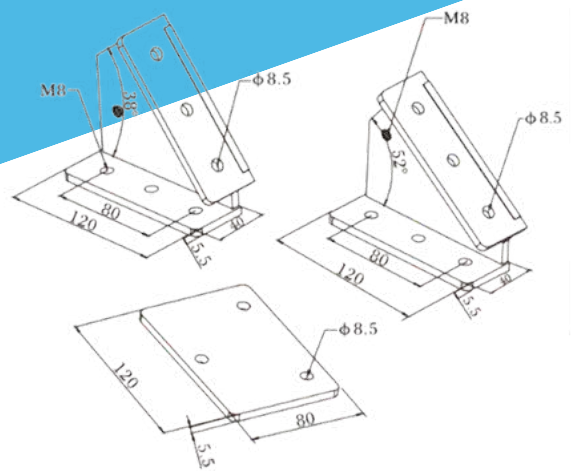

Part No	Fitting & Description	kg	Compatibility Code
1202	----	4.2	38°

STAIRWAY ASSEMBLY SET GP 45°

STEEL GRAY POWDER COATING

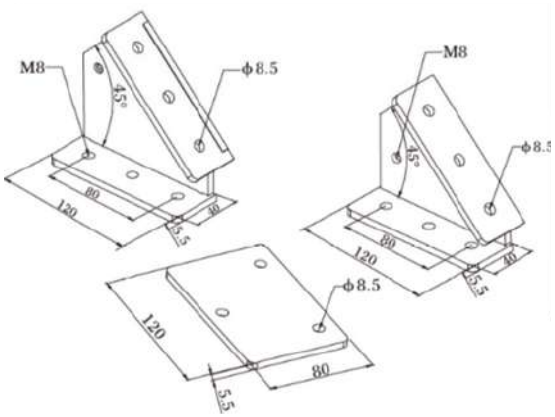

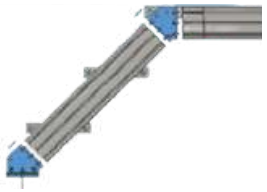

Part No	Fitting & Description	kg	Compatibility Code
1203	----	4.2	45°

STAIRWAY ASSEMBLY SET GP 60°

STEEL GRAY POWDER COATING

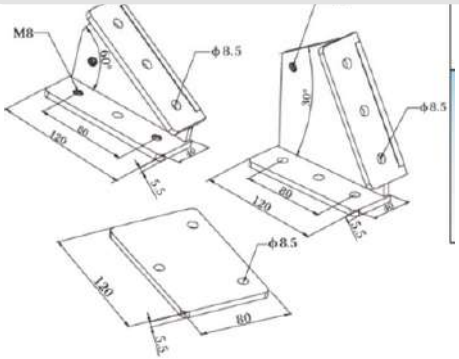

Part No	Fitting & Description	kg	Compatibility Code
1204	----	4.2	60°

BUTT MOUNTING PLATE

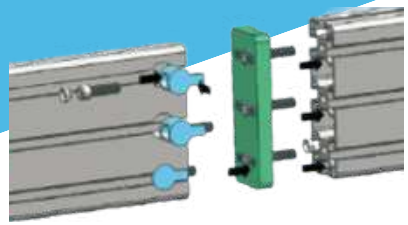

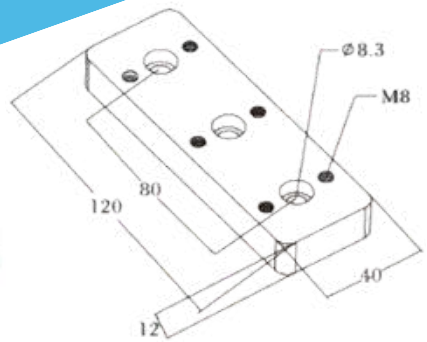

Part No	Fitting & Description	kg	Compatibility Code
1210	-----	0.165	40120

ANTI NOISE ADHESIVE STROP

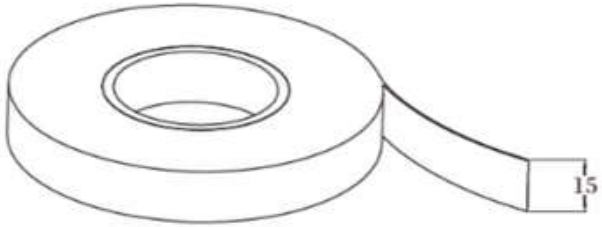

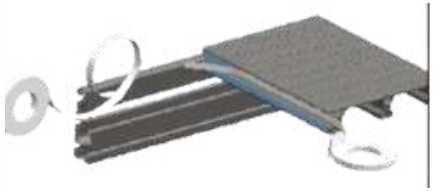

Part No	Fitting & Description	kg	Compatibility Code
1205	-----	0.138	15mm*25m

ANTISKIT ADHESIVE STRIP

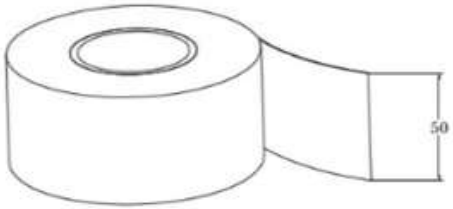

Part No	Fitting & Description	kg	Compatibility Code
1206	-----	0.706	50mm*20m

STAIRWAY PLATFORM SYSTEM

30°

38°

45°

60°

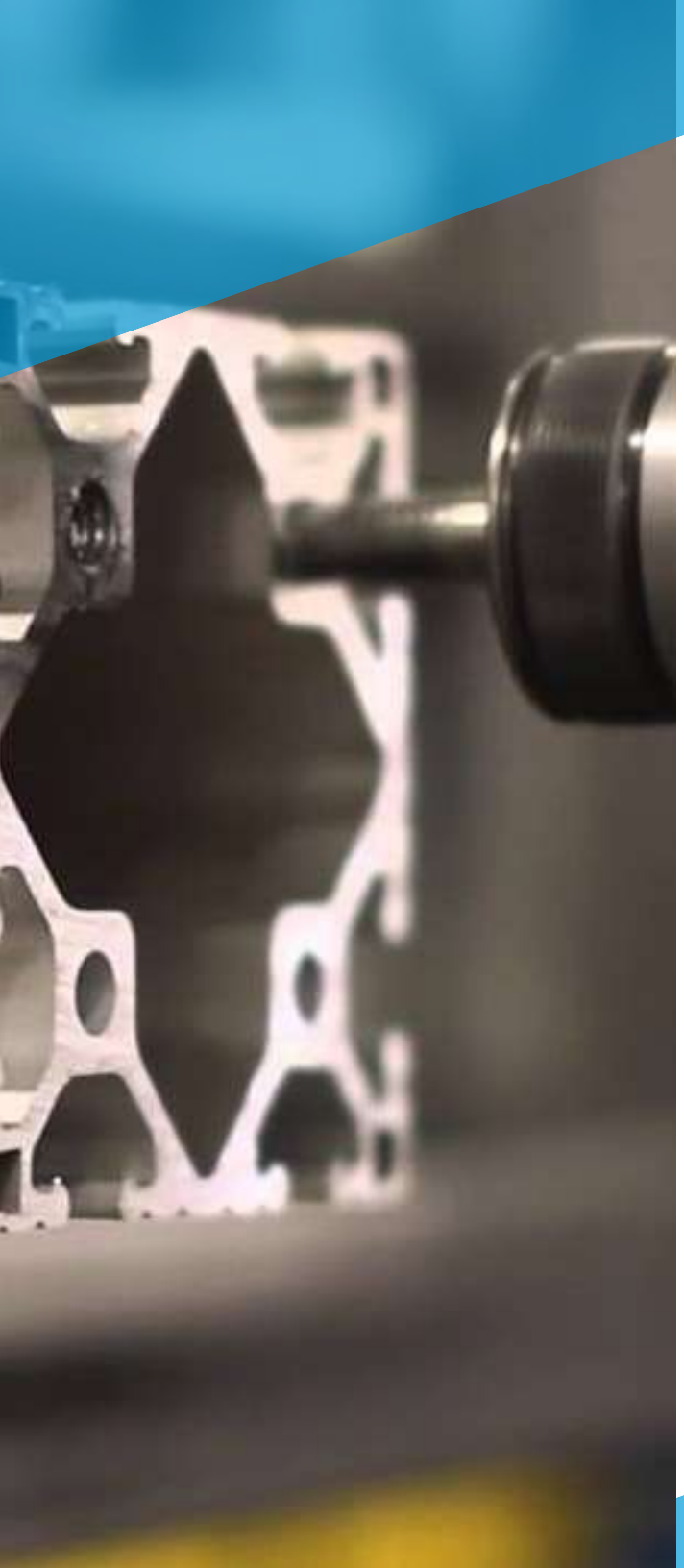

Devol C&O

EOAT'S TOOLING COMPONENTS