12' X 6' MINI-SOCCER GOAL

(12' x 6' Multi-Surface) - Two section crossbar.

FITTING INSTRUCTION

www.itsagoal.co.uk
TEL: 0114 242 4244
SPARE PARTS

COMPONENTS

A	CORNER BRACKET	x4
X	CORNER BRACKET UPRIGHT 4 HOLES	x2
B	SPIGOT	x4
C	BLANKING CAP	x2
D	MULTI-SURFACE ANCHOR	x3
E	GROUND PEG	x6
F	STANCHION ELBOW	x2
G	LOWER BACK STANCHION CONNECTOR	x2
H	LARGE QUICK RELEASE BUTTON	x12
I	SMALL QUICK RELEASE BUTTON	x12
SC	STRAIGHT CONNECTOR	x1
SSC	STANCHION CONNECTOR	x2
J	NET TIE	x32
K	ARROW HEAD NET FIXING with attached LOCKING PIN	x24
NET	GOAL NET 12' x 6'	x1

POST SECTIONS

L	CROSSBAR SECTION 1700 mm LONG - 68mm Diameter	x1	68mm
L1	CROSSBAR SECTION with insert 1928mm - 68mm Diameter	x1	68mm
M	BACKBAR SECTION 1814mm LONG - 68mm Diameter	x2	68mm
N	SIDEBAR SECTION 1360mm LONG - 68mm Diameter	x2	68mm
O	UPRIGHT SECTION 1726mm LONG - 68mm Diameter	x2	68mm
P	TOP STANCHION TUBE 400mm LONG - 40mm Diameter	x2	40mm
Q	BACK STANCHION TUBE 0mm Diameter	x4	40mm

ARROW NET FIXING

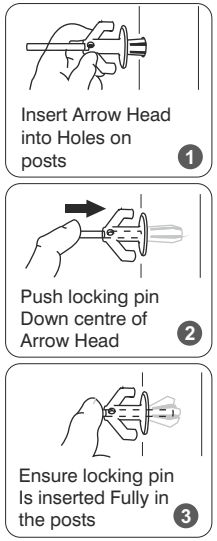

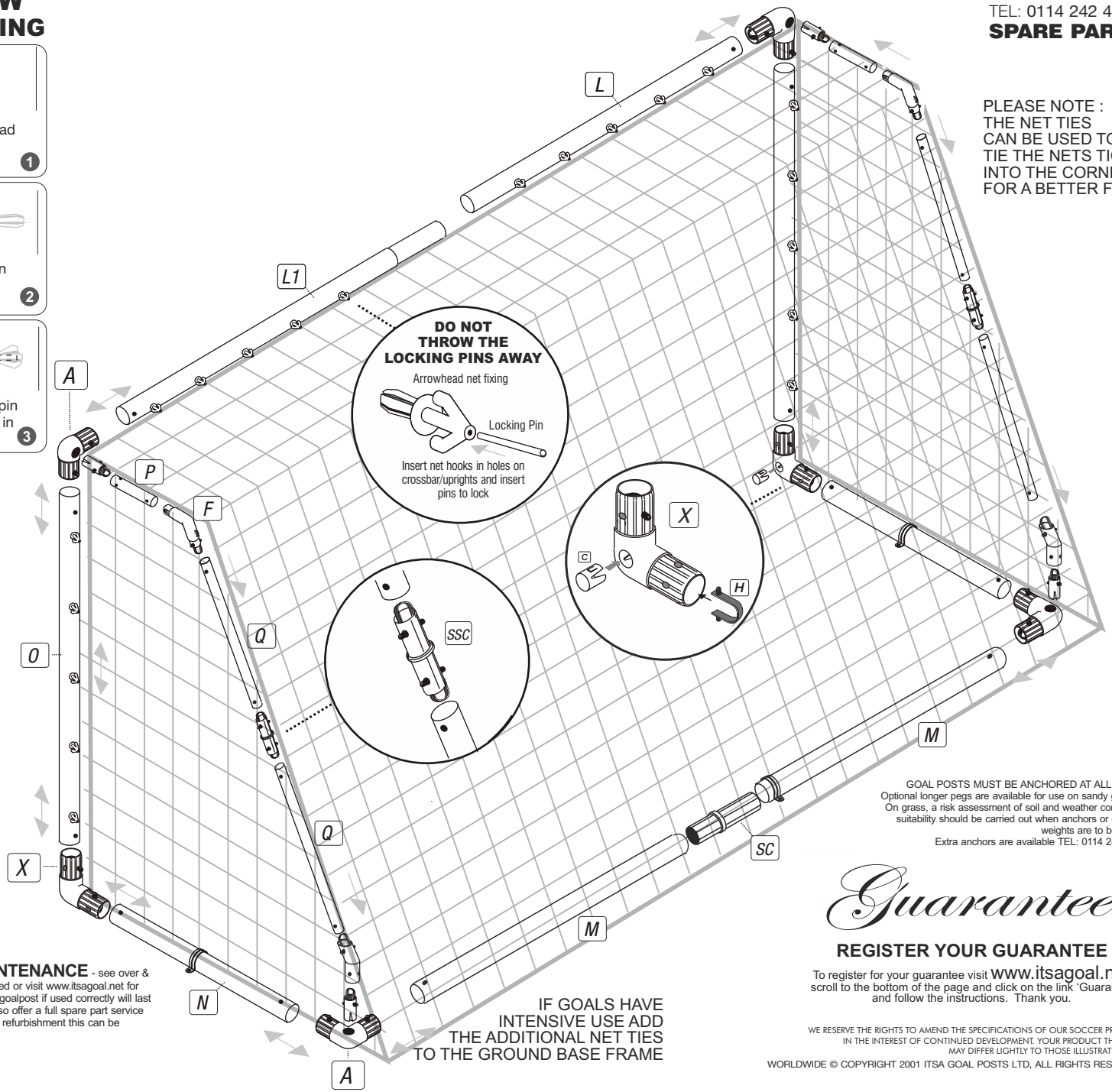

PLEASE NOTE : THE NET TIES CAN BE USED TO TIE THE NETS TIGHTLY INTO THE CORNERS FOR A BETTER FIT.

GOAL POSTS MUST BE ANCHORED AT ALL TIMES
Optional longer pegs are available for use on sandy ground. On grass, a risk assessment of soil and weather conditions suitability should be carried out when anchors or counter weights are to be used.
Extra anchors are available TEL: 0114 2424244

CARE & MAINTENANCE - see over & additional sheet supplied or visit www.itsagoal.net for additional copies. Our goalpost if used correctly will last many years. We do also offer a full spare part service and if your goals need refurbishment this can be arranged

IF GOALS HAVE INTENSIVE USE ADD THE ADDITIONAL NET TIES TO THE GROUND BASE FRAME

Guarantee

REGISTER YOUR GUARANTEE

To register for your guarantee visit www.itsagoal.net scroll to the bottom of the page and click on the link 'Guarantee' and follow the instructions. Thank you.

WE RESERVE THE RIGHTS TO AMEND THE SPECIFICATIONS OF OUR SOCCER PRODUCTS IN THE INTEREST OF CONTINUED DEVELOPMENT. YOUR PRODUCT THEREFORE MAY DIFFER LIGHTLY TO THOSE ILLUSTRATED. E&OE

WORLDWIDE © COPYRIGHT 2001 ITSA GOAL POSTS LTD, ALL RIGHTS RESERVED

STEP BY STEP ASSEMBLY

FOR EASIER ASSEMBLY Use a rubber mallet and also spray furniture polish inside posts. Do not use a metal hammer. Do not apply grease or vaseline.

STEP 1

Lay out all Posts & components

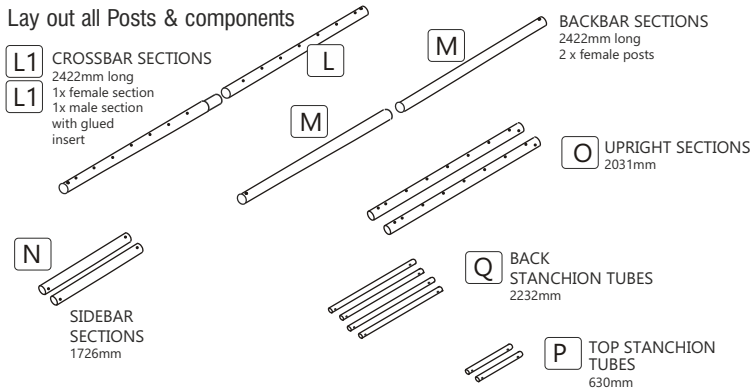

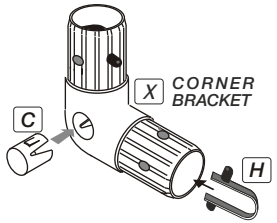

STEP 2

Insert Blanking Cap part **C** and insert Large Quick Release Button **H** (x2) into Corner Bracket **X.**(NOTE: CornerBracket **X** is different from Corner Bracket **A**. Corner Bracket X is to be fitted into the upright posts and has 8 holes.

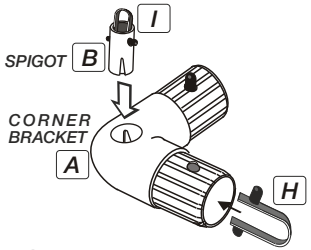

STEP 3

Insert Small Quick Release Black Button **I** into the Spigot **B**. Insert Spigot B and insert **H** (x2) into Corner Bracket **A.** (NOTE: Corner Bracket **A** has 4 holes)

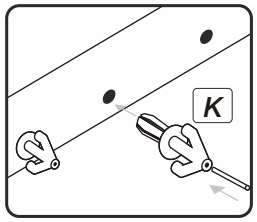

STEP 4

Insert Arrow Head Net Fixings K into Upright Posts and Crossbar. **DO NOT THROW AWAY LOCKING PINS**

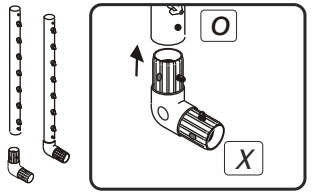

STEP 5

Insert Corner Brackets **X** into the upright posts **O** (uprights have logos on the side)

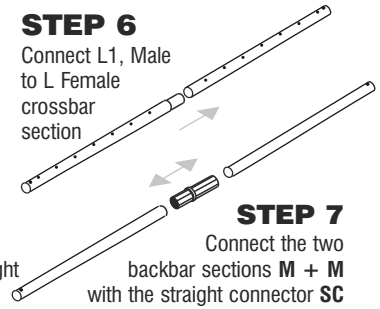

STEP 6

Connect L1, Male to L Female crossbar section

STEP 7

Connect the two backbar sections **M + M** with the straight connector **SC**

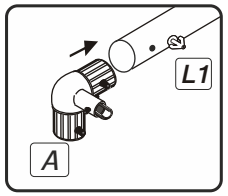

STEP 8

Insert Corner Brackets **A** into each end of the 16' crossbar **L1 &L**

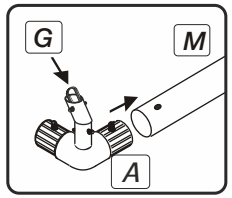

STEP 9

Insert Corner Brackets **A** into each end of the 16' Backbar **M & M1**

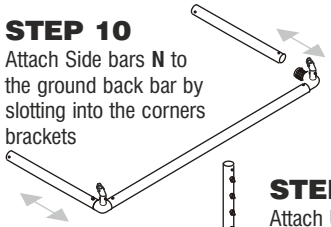

STEP 10

Attach Side bars **N** to the ground back bar by slotting into the corners brackets

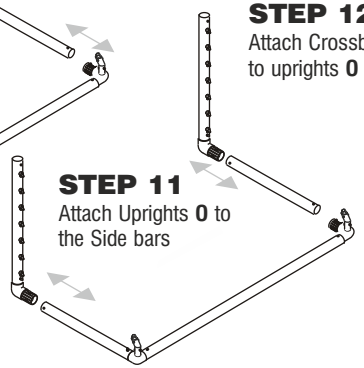

STEP 11

Attach Uprights **O** to the Side bars

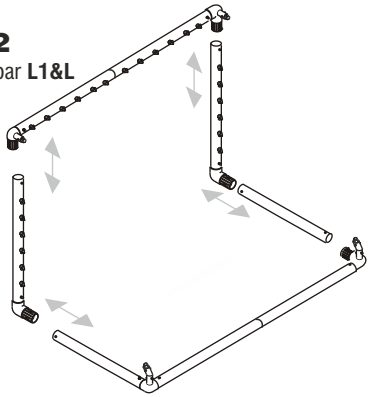

STEP 12

Attach Crossbar **L1&L** to uprights **O**

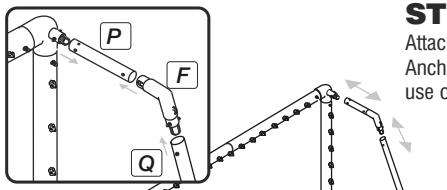

STEP 13

Join top tubes **P** to elbows **F** and back tubes **Q+SCC+Q** and connect to the goalpost.

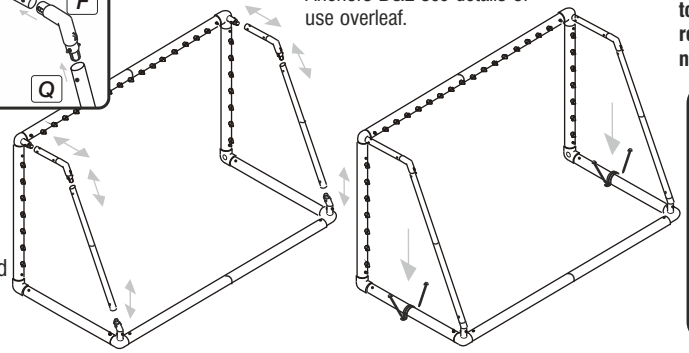

STEP 14

Attach two of the Ground Anchors **D&E** see details of use overleaf.

STEP 15

Fit the net - attach the net to each corner first where the crossbar meets the uprights. **On the back ground bar at the back of the goal extra netting can be rolled and tied to the back ground bar for a neat finish. Finally add the two remaining anchors on the ground back bar with the netting underneath as shown.**

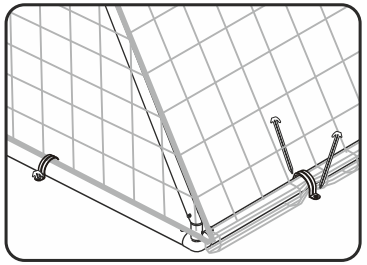

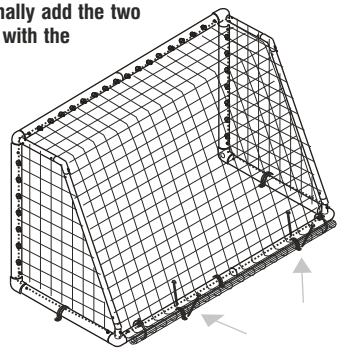

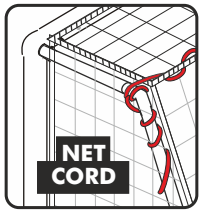

To define the roof of the net Tie the cord to one side and pull the net cord tight and wrap neatly down and around the stanchion tube If you are regularly attaching or detaching the net then apply coloured tape to the roof corners to help identify.

FASTER MATCH DAY

ASSEMBLY & DISASSEMBLY

The goal net can be left attached to the pre-assembled goal post side frames. After games detach crossbar and back bar for storage. We advise fitting the optional net ties to the side frames and stanchions.

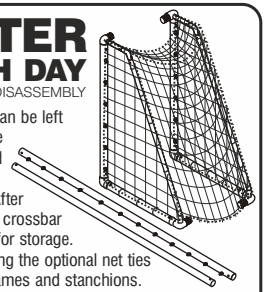

OPTIONAL - Net ties are ideal to fit nets tightly to the stanchions. This is ideally when nets are left attached to the fully assembled side frames.

GROUND PEG REMOVAL

USE THE HOOK ON THE END OF THE RED GROUND PEG TO REMOVE PEGS FROM THE GROUND OR USE A CLAW HAMMER FOR PEGS THAT ARE DIFFICULT TO REMOVE.

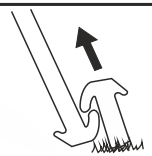

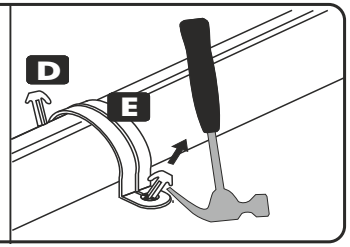

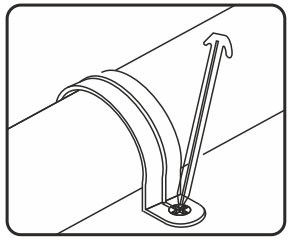

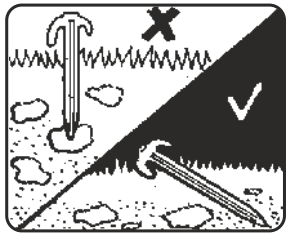

LONGER GROUND PEGS ARE AVAILABLE SEPARATELY.

STANDARD 200mm

SOFTER GROUND 300mm

Longer pegs are to be used on sandy or Soft ground earth. A risk assessment of soil conditions suitability should be carried out when anchors are to be used.

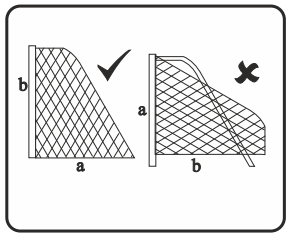

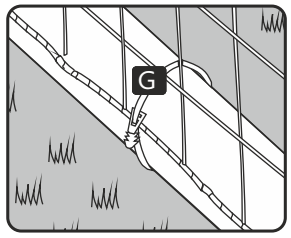

WORLDWIDE © COPYRIGHT 2016 ITSA GOAL POSTS LTD, ALL RIGHTS RESERVED A REGISTERED DESIGN

WORLDWIDE © COPYRIGHT 2001 ITSA GOAL POSTS LTS, ALL RIGHTS RESERVED A REGISTERED DESIGN

STEP BY STEP NET FITTING

STEP 1

Open net and check the lengths of a and b correspond with the diagram below.

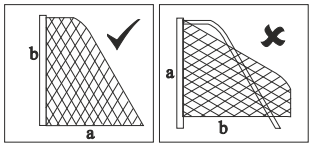

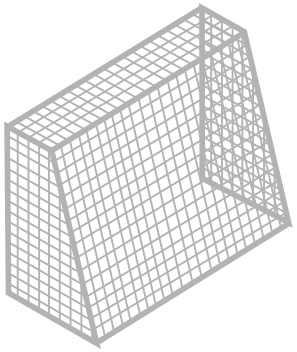

STEP 2

With the net the correct way round lift the net onto the goalpost frame. This is easier with two people.

◀ NOTE: If your net does not fit the first time, you may be fitting it to the goal frame upside down i.e. that is to say the net from the crossbar to the floor (a) is longer than the length of the net to the bottom of the upright.(b)

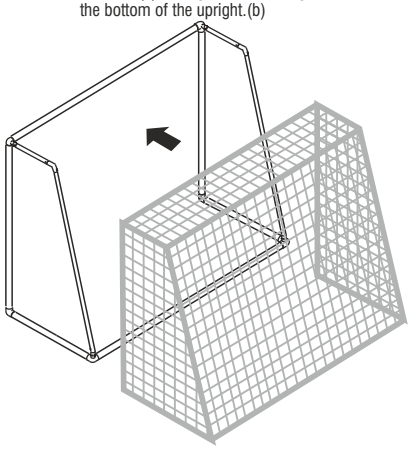

STEP 3

Attach the corners first, where the upright posts meets the crossbar as shown. Then attach the net to the post using the Arrow head net fixings on crossbar and uprights.

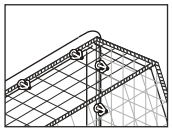

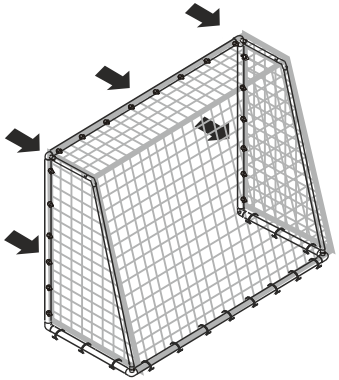

STEP 4

Using the large net ties tie the net to the ground side frame back ground frame.

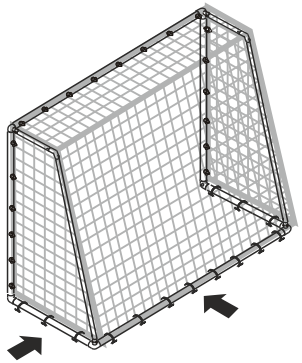

STEP 5

Using the small net ties attach the net down the back of the sloping back net supports as shown to the posts as shown.

OPTIONAL - STANCHION TIES

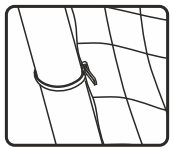

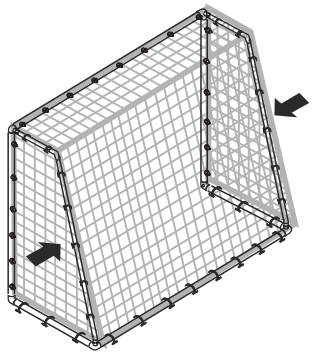

STEP 6

NET CORD - ROOF TO THE NET

To help define the roof of the net Tie the cord to one side and pull the net chord tight and wrap neatly down and around the stanchion section.

If you are regularly attaching or detaching the net then apply coloured tape to the roof corners of net to help identify the roof area.

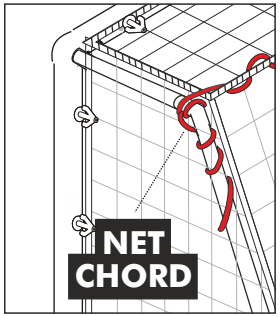

ANCHORING YOUR GOAL

WARNING: Check the position of any underground services before using the ground anchors and pegs. We take no responsibility for any damage or injury caused in this manner. HARD SURFACES: to prevent damage to goal or it's components, loosen soil with a steel pole and moisten with some water before inserting the ground anchors. Do not use the goal in sub zero temperatures.

ANCHORING YOUR GOAL ON GRASS - POSITION YOUR GOAL ON A LEVEL PLAYING SURFACE. PLACE THE MULTI-SURFACE ANCHOR OVER EACH SIDE OF THE GROUND FRAME (POSITIONS SHOWN) HAMMER THE PEGS THROUGH THE HOLES (DO NOT USE METAL HAMMERS USE RUBBER MALLETS) ON THE ANCHOR DOWN UNDER THE FRAME INTO THE GRASS ADDITIONAL ANCHORS OR LARGER PEGS CAN BE PURCHASED FOR USE ON SOFT GROUND OR SAND. THESE ANCHORS CAN BE USED FOR HARD SURFACES SUCH AS TARMAC WITH OPTIONAL BOLTS. ON HOT/SUNNY DAYS TARMACADAM SOFTENS AND THEREFORE TO ANCHOR YOUR GOAL PROPERLY YOU MUST:-

1 DIG HOLES IN YOUR TARMAC FILL HOLES WITH CONCRETE 2 DRILL TWO 14MM HOLES 12CM APART AND 70MM DEPTH. 3 POSITION GOAL AND ANCHOR, INSERT AND TIGHTEN BOLT.

FOR OTHER SURFACES SUCH AS WOODEN SPORTS HALL FLOORS WOOD SCREWS (INSTEAD OF BOLTS) OR COUNTER BALANCE WEIGHTS CAN ALSO BE USED (SUPPLIED SEPARATELY).

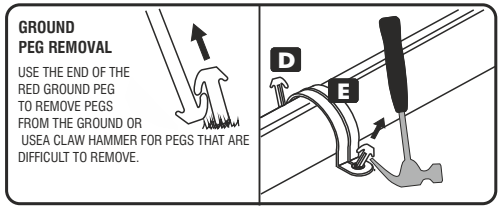

Longer pegs are to be used on sandy or soft ground earth. A risk assessment of soil conditions suitability should be carried out when anchors are to be used.

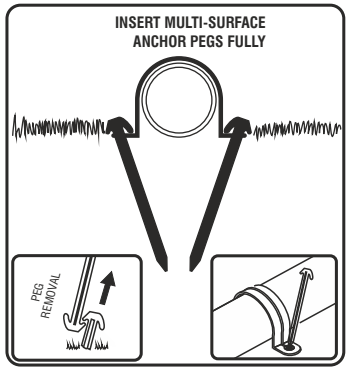

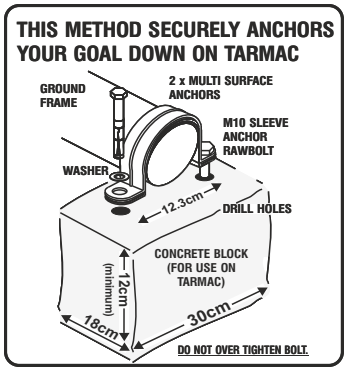

CARE & MAINTENANCE

We advise adult supervision during assembly and use. Observe and follow warning labels attached to goal.

Do not use any components, nets or parts if they are damaged or broken. Spare parts and replacement nets are readily available. If others are to install your goal you should show them how to erect and dismantle the goal and hand them a copy of the fitting instruction.

Do not drop any heavy objects on ends of tubes. Hard surfaces: to prevent damage to goal or it's components, loosen soil with a steel pole and moisten with some water before inserting the ground anchors.

Do not use the goal in sub zero temperatures. warning labels should be replaced when worn and we recommend replacing them every two years -spare labels available. damaged components requested under guarantee must be returned for inspection. Failure to follow the warnings, fitting instructions contained in this document, may invalidate your guarantee.

The company , its agents and representatives do not accept any product liability if used outside the EU. Use of the product in other countries outside the EU including the USA is not covered and appropriate insurance should be taken out by the user to cover for any eventuality.

We reserve the rights to amend the specifications of our soccer products in the interest of continued development. Your product therefore may differ slightly to those illustrated. Not suitable for children under 36 months until assembled due to small parts.

NET TIES : We recommend placing the net ties no more than 340mm apart. The net ties supplied are designed to permanently fix the net to the goal frame. If you require to take nets on and off, other net fixings can be used.

NOTE: Goal must be anchored otherwise breakages may occur. At the end of the season nets can be tied into a bundle and placed into a pillow case (not to damage washing machine) and washed at 40 C with normal washing powder. The ground frame can be washed with hot soapy water. Any scuff marks on posts can be rubbed off with a light abrasive scouring pad.

If you find the nets are worn along the floor it may be rodents, by spreading pepper along the base frame rodents will be deterred. Crossbars will not be replaced within the guarantee period if broken by swinging or climbing or any other misuse.

DO NOT try to glue any damaged fixings. Plastic materials in this product vary and this may cause the plastic to break. Always replace any damaged components.

NOTE : All plastic extrusions vary and therefore some tubes may be looser or tighter to connector fittings. If you want to increase the diameter of the fitting just wrap masking tape around the part that fits into the tube, twist as you insert the fitting and it will grab to the tube tight. You can make tighter fits by adding more tape.

YouTube Visit our YouTube site for assembly videos : **www.youtube.com/user/Footballgoalposts**

WORLDWIDE © COPYRIGHT 2001 ITSA GOAL POSTS LTD, ALL RIGHTS RESERVED A REGISTERED DESIGN
WE RESERVE THE RIGHTS TO AMEND THE SPECIFICATIONS OF OUR SOCCER PRODUCTS IN THE INTEREST OF CONTINUED DEVELOPMENT.
YOUR PRODUCT THEREFORE MAY DIFFER LIGHTLY TO THOSE ILLUSTRATED. E&OE