Daytona BY CSC TRIKES

Trike Conversion Kit

2009 - Current

FLHT Series Harley-Davidson

Installation Instructions

REVISED – 4/21/2023

California Sidecar Parts & Technical Support
434.263.6500

Table of contents:

Warnings and Considerations	4
General Information	5
Disassembly of Motorcycle	7
Performance Gear Set	17
Front Drive Belt Installation	18
Modification of Frame	21
Rear Suspension Unit Installation	23
Brake Line Installation	30
Brake Bleeding Procedure	33
Setting up the Sonic Tension Meter	34
Using the Sonic Tension Meter	34
Tensioning the Front Drive Belt	35
Gravel Pan Installation	36
Exhaust Mount Installation	38
Exhaust Installation	39
Tensioning the Rear Drive Belt	41
Suspension Setup	43
BCM Wiring	45
Bank Angle Simulator	46
Trike Body Installation	47
Tour Pak Installation	48
Trike Body Alignment	49
Securing the Trike Body	51
Reassembly of the Motorcycle	52
Final Reassembly of the Motorcycle	52

Warnings and considerations:

1. **Disclaimer** - These instructions assume a level of understanding of motorcycle repair and maintenance beyond that of a "beginner" and/or "novice" and California Sidecar cannot be liable for an installer's failure to understand or follow these instructions as written. Likewise, California Sidecar cannot be responsible if any of the steps are omitted or shortcuts are taken, or parts other than those supplied by California Sidecar, are used in installing this trike kit.
2. "**WARNINGS**" are all printed in bold type and capitalized. They mean to use extreme care in a given step so as not to damage the part, motorcycle, and/or yourself.
3. **Always** wear safety glasses when using hand and/or power tools.
4. When working in and around the fuel system, **always** work in a well-ventilated area, free from sparks and open flames.
5. All directional references to the "right side" and the "left side" are as if you are seated on the motorcycle.
6. All directional references to "forward" mean to the front of the motorcycle while "back" means the rear of the motorcycle unless otherwise stated.
7. Please consult the appropriate Service Manual for your motorcycle if further detail is necessary.

Recommended Lubricants and Sealants:

1. Molybdenum Disulfide grease for splines (Mobil Grease Moly 52 or equivalent)
2. Multipurpose grease for Zerk fittings.
3. Thread locking compound (Loctite 242 minimum).
4. High temperature Silicone sealant.

Torque values of fasteners:

1. Rear Fork Pivot Shaft Nut 40 – 45 ft/lbs
2. 7/16 – 14 x 1 ½ HHCS 38 – 42 ft./lbs.
3. 3/8–16 x 1 BHSCS for the upper mount 12 ft/lbs
4. 3/8–16 nyloc nut on the rear suspension studs 12 ft/lbs
5. 1/2 - 13 x 2 HHCS 75 ft./lbs.
6. 7/16 – 20 x 1 ½ HHCS 38 – 42 ft./lbs.

Acronyms of fasteners:

1. HHCS = Hex head cap screw
2. SHCS = Socket head cap screw
3. FHSCS = Flat head socket cap screw
4. BHSCS = Button head socket cap screw
5. FHCS = Flange head cap screw
6. FHNN = Flange head nylon locking nut

NOTICE TO INSTALLER:

2014-2019 H-D Motorcycles being used for Daytona trike conversions require an eternal Bank Angle Sensor simulator to be installed during trike installation so that the trike does not turn off while going around a sharp corner. In order for the motorcycle to recognize it, an H-D dealer must change the ECM programing. This job is very simple and only takes a few minutes. It can be done at any time, but CSC recommends having this done before the trike kit is installed. It will be easier to get the 2 wheeled motorcycle to the dealer, and when the trike conversion is complete the customer will be ready to go with a completed trike.

Procedure:

1. **Connect H-D "Digital Technician"**
2. **Enter the "BCM Customization" menu**
3. **Go to "External B.A.S." (Bank Angle Sensor)**
4. **Choose 2014-2018 Triglide or Sidecar. NOTE: Choose this option even if you have a 2019 bike.**
5. **Finished**

Disassembly of motorcycle:

1. Place the motorcycle on the lift.
2. Place a suitable Jack under the Frame of the Motorcycle and tie down securely.
3. Remove Drain Plug from Primary Cover Assembly and drain oil.

4. Remove the Seat.
5. Disconnect and REMOVE battery.
6. Remove the Saddle Bags.

7. Remove the Right and Left Side Covers.

8. Disconnect the Tour Pak wiring.
9. Remove Tour Pak fasteners.
10. Remove Tour Box.
11. Remove both saddlebag support rails if equipped.
12. Remove right side rear heat shield.

13. Remove Passenger Floorboards.
14. Remove four frame cover fasteners and the Left and Right Frame Covers.
15. Remove four Tour Pak Support fasteners and the Tour Pak Support.
16. Remove and discard both Mufflers. Save Muffler Clamps.

17. Disconnect the Rear Lamp Wiring Harness
18. Remove four rear fender fasteners and rear fender.
19. Remove and save the two fasteners and Retaining Washers from the Stud Plate. Remove and save the Stud Plate.

20. Remove four ½ - 13 HHCS and washers. Remove and discard Rear Air Shocks, Airlines and Air Valve bracket.

WARNING: If A.B.S. Equipped DO NOT drain brake fluid.

2009-2013 NON ABS units follow steps 22-24:

21. Drain all Brake Fluid from the Rear Brake System.
22. Cut and remove Cable ties and un-clamp Wire Harness Loops from the Rear Brake Line along its length, including Clamps on Swing Arm.
23. Remove and Save the front Banjo Bolt and brake light switch.
24. Discard the crush washers, line, and caliper.
25. Unclip rear caliper ABS brake line from the swingarm.
26. Remove the Spring Clip and nut from the Rear Axle.
27. Remove Rear Axle and Rear Wheel Spacers.
28. Push Rear Wheel Assembly forward and slip Rear Belt off the Rear Sprocket.
29. Remove Rear Brake Caliper and ziptie it to the frame.
30. Remove Rear Wheel Assembly.

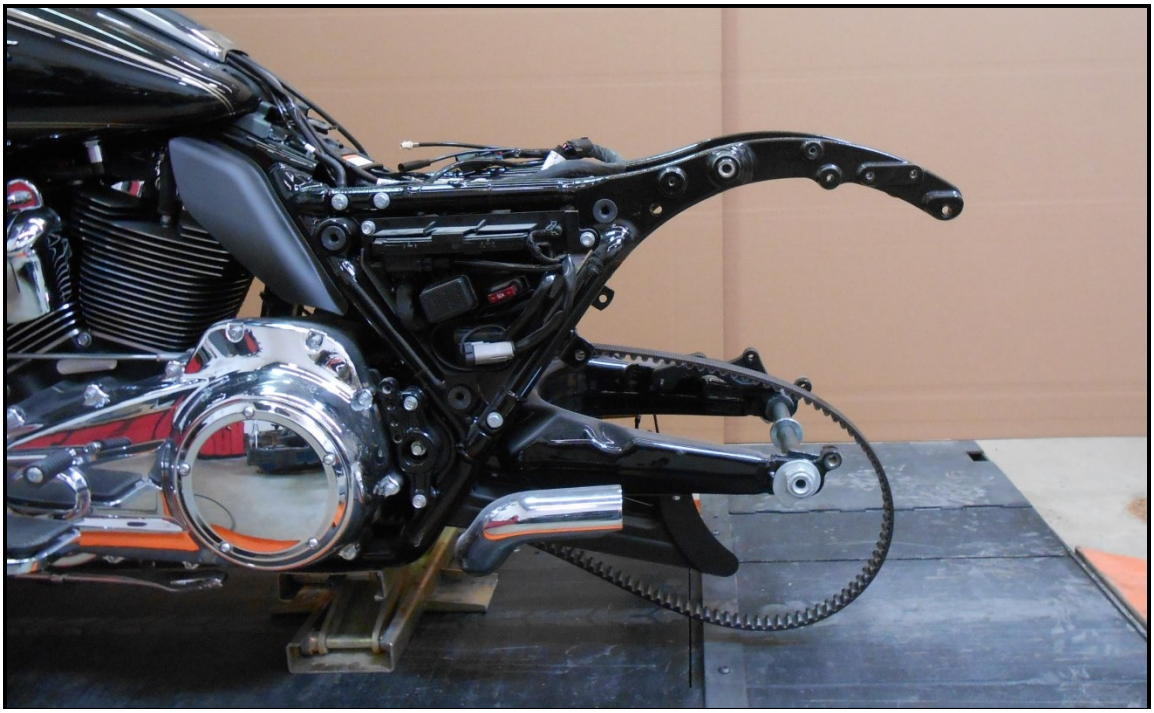

31. Place a suitable Bottle Jack under the Oil Pan of the Transmission.
32. Raise Jack to enable easy removal of the Rubber Mounts and Rear Fork Pivot Shaft.
33. Remove the two fasteners from the Left Rear Fork Bracket.
34. Remove Right Rear Fork Shaft Nut. Remove Cup Washer from Rear Fork Pivot Shaft.
35. Remove Rear Fork Pivot Shaft.
36. Remove and discard the Rear Fork.

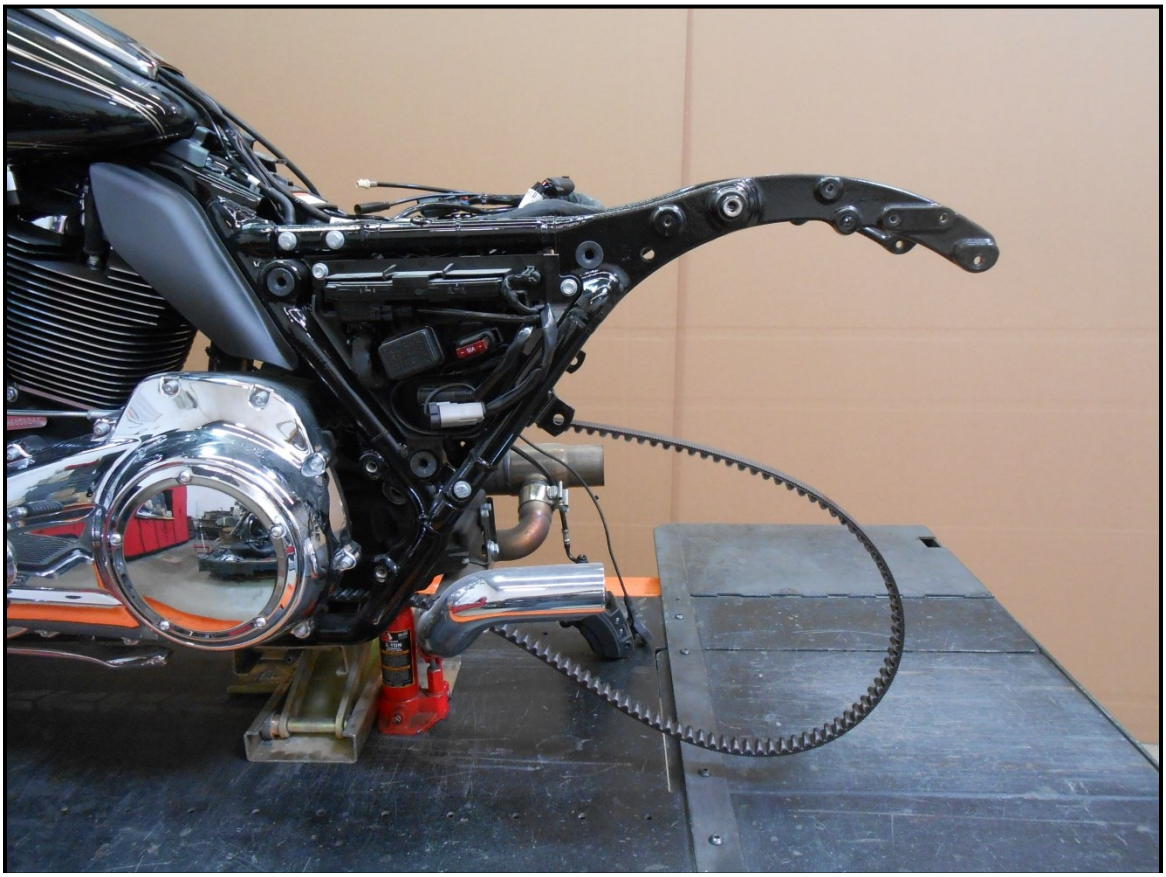

37. Remove Rear Fork Pivot Shaft Nut on the Left side of the Shaft. Remove the Cup Washer, Rubber Mount and Spacer. Discard Spacer and replace Rubber Mount and Cup Washer apply thread locking agent to the threads. Loosely reinstall the Swing Arm Pivot Shaft Nut.

SAVE

DISCARD

38. Remove two 3/8 – 16 SHCS. Remove the left Driver Footboard.
39. Remove the HHCS, flat washer, and lock washer and the lock plate from the top of the Jiffy Stand then remove the Jiffy Stand and its spring.
40. Remove the Inner and Outer Shift Levers.

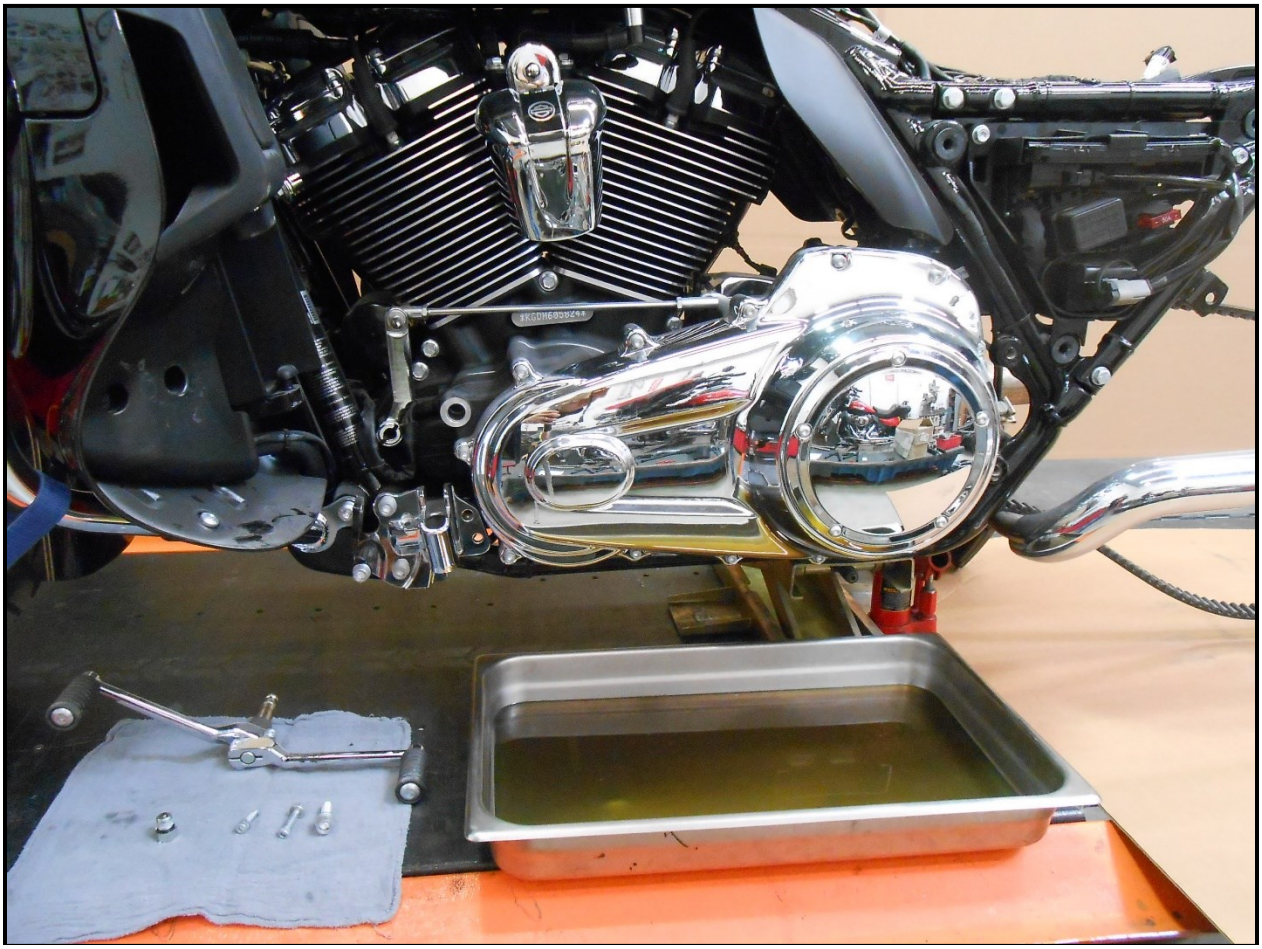

41. Remove ten ¼ - 20 SHCS. Remove the Primary Cover.
42. Remove and discard Primary Cover Gasket.
43. Clean residual gasket material from both surfaces.
44. Remove the two fasteners and the Primary Chain Adjuster.
45. Remove the Clutch Lifter Retaining Ring from the Clutch Basket. Remove Clutch Lifter Assembly.

46. Using the Primary Drive Locking Tool. Place it into position and loosen the Compensating Sprocket Bolt.
47. Using the Primary Drive Locking Tool. Place it into position and loosen the Clutch Hub Main shaft Nut. **WARNING:** This nut is LEFT HAND threaded.
48. Remove the Clutch Assembly, Primary Chain, Compensating Sprocket, and Crank Shaft Extension in one assembly.
49. Loosen but do not remove two 5/16 SHCS from the starter motor.
50. Remove five 5/16 – 18 HHCS from the inside of the Primary Chain case. Remove the Primary Chain case.
51. Remove the Crankcase gasket.

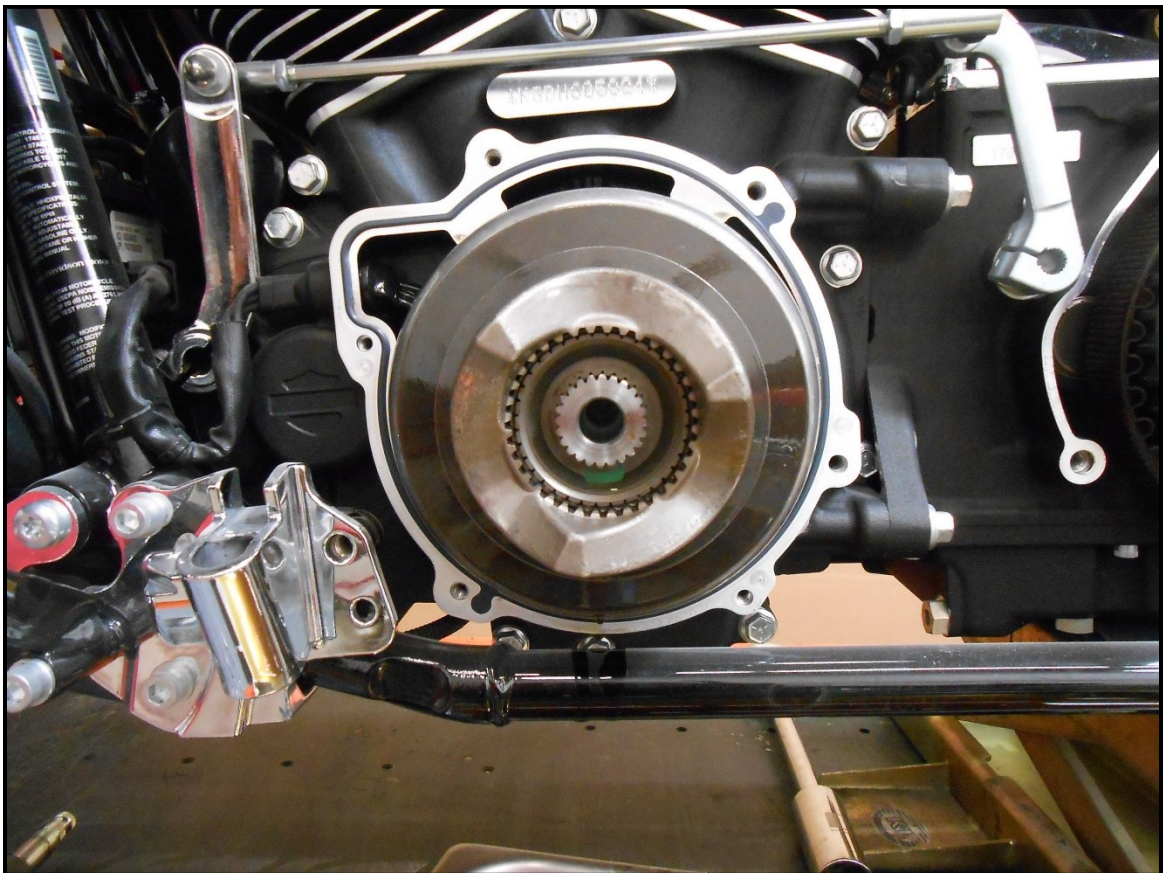

52. Remove and Discard the OEM Drive Belt.

PERFORMANCE GEAR SET (Optional Accessory):

1. Remove the OEM sprocket and nut, nut has right hand threads.
2. Slide New CSC Performance Drive Sprocket onto the splines of the Main Shaft.
3. Lock Final Drive Sprocket with the Final Drive Sprocket Locking Tool.
4. Apply Loctite 262 to the threads of the Final Drive Sprocket Nut.
5. Finger tighten the Final Drive Sprocket nut.
6. Using Special Deep Well Socket and Pilot. Torque the Final Drive Sprocket Nut to 35 ft-lbs
7. Scribe a straight line on the Final Drive Sprocket Nut and Final Drive Sprocket.
8. Tighten the Final drive Sprocket Nut an additional 35° to 40°.
9. Place the Final Drive Sprocket Lock Plate over the Final Drive Sprocket Nut and align the holes in the Final Drive Sprocket Lock Plate with the two tapped holes in the Final Drive Sprocket. If these two holes do not line up continue tightening the Final Drive Sprocket Nut to 45° maximum.
10. Reinstall the two ¼ - 20 SHCS with thread locking agent through the Final Drive Sprocket Lock Plate into the Final Drive Sprocket and torque to 90 – 110 in/lbs.
11. Install CSC Speedometer Calibrator into the rear of the transmission.

FRONT DRIVE BELT INSTALLATION:

1. Install NEW CSC Front Drive Belt.
2. Install new inner primary gasket with two white plastic tree clips saved from before.
3. Reinstall the inner primary and its fasteners. Torque to the 25–27 FT-LBS in the sequence below.

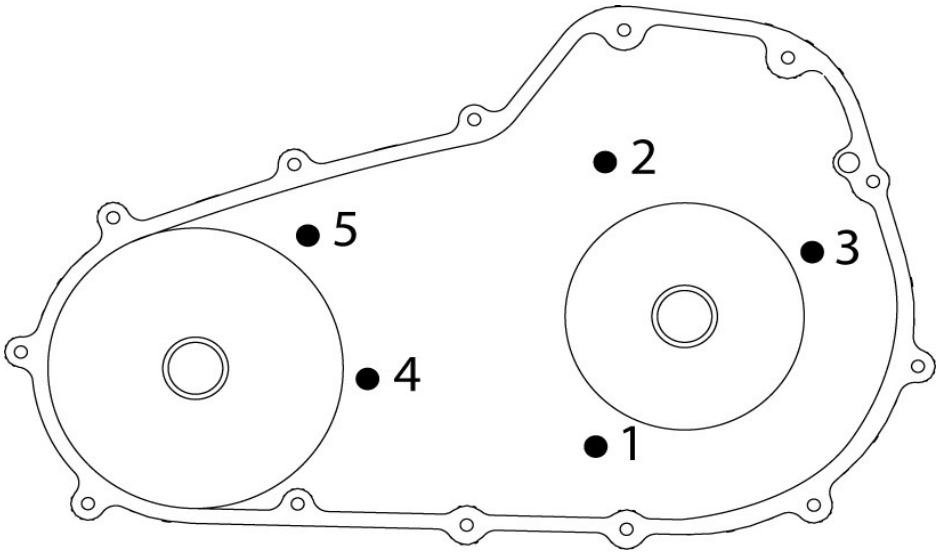

4. Place starter into position and tighten the two fasteners.
5. Install the Clutch, Primary Chain, compensating Sprocket, and Shaft Extension as one assembly. Start the Clutch onto the Main Shaft first. Then align the splines of the Engine Sprocket Shaft with the splines in the Shaft Extension. Now align the splines in the Clutch with the splines on the Main Shaft.
6. Clean off old Loctite then apply two drops of Loctite 262 to the threads of the Compensating Sprocket Bolt and Clutch Hub Main Shaft Nut.
7. Install the Compensating Sprocket Bolt and hand tighten.
8. Install the LEFT HAND threaded Clutch Hub Main Shaft Nut and hand tighten.

9. Using the Primary Drive Locking Tool. Torque the Compensating Sprocket Bolt to 100 FT-LBS then loosen bolt one full turn. Then final torque is 175 FT-LBS.
10. Using the Primary Drive Locking Tool. Torque the Clutch Hub Nut to 70–80 FT-LBS. **WARNING:** This nut is **LEFT HAND** threaded.
11. Remove the Primary Drive Locking Tool.
12. Place the Clutch Release Plate into the Clutch with the stamped word “OUT” facing outwards.
13. Install the Retaining Ring into the bore of the Clutch Hub. Ensure the Retaining Ring is fully seated into the Clutch Hub groove.
14. Install the Primary Chain Adjuster with its fasteners and tighten.
15. Hang new Primary Chain Case Cover Gasket on Dowels.
16. Install the Outer Primary Chain Case Cover over the Primary Chain Case Cover Gasket.
17. Start thirteen ¼ - 20 SHCS with ¼ flat washers into the Outer Primary Chain Case Cover.
18. Torque the Outer Primary cover bolts to 108–120 IN-LBS in the sequence below.

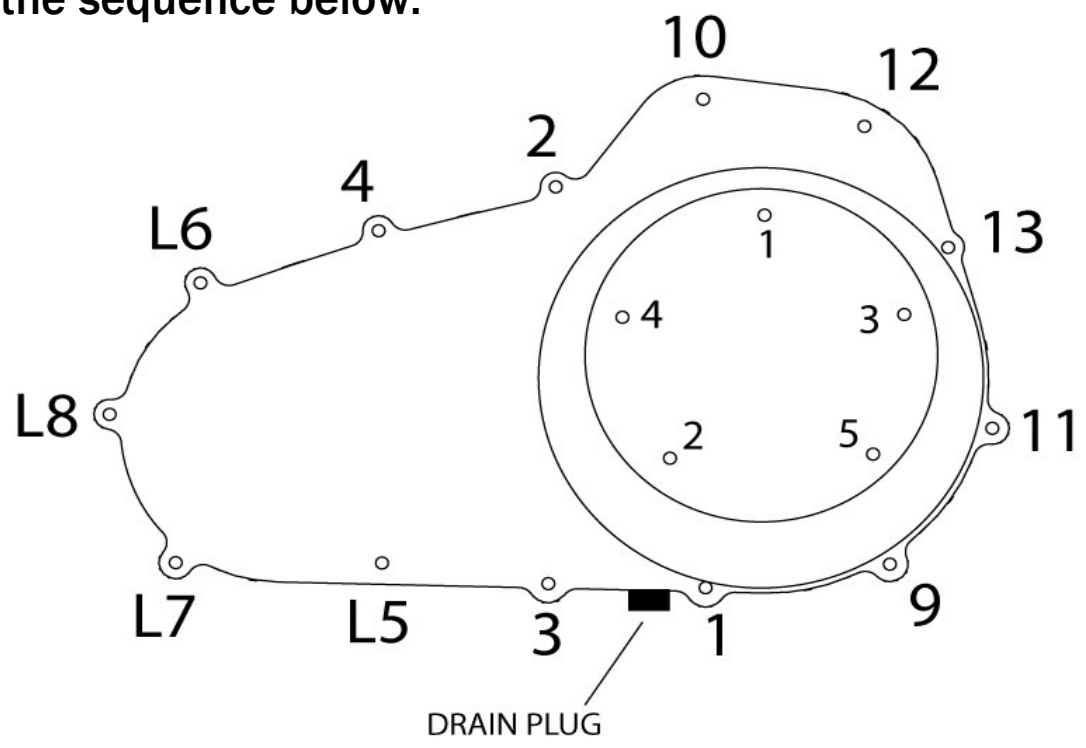

19. Apply thread sealant to the Drain Plug and reinstall.
20. Remove five ¼ - 20 torx head cap screws and the Clutch Inspection Cover.
21. Fill the Primary Chain case with Primary Chain case Lubricant.

2009-2016 45 oz. Dry Fill
2017- UP 34 oz. Dry Fill

22. Swab all lubricant from the Quad Ring groove in the Primary Chain Case Cover. Reinstall Quad Ring.
23. Using the five ¼ - 20 torx head cap screws replace the Clutch Inspection Cover. Torque to 84-108 IN-LBS in the sequence above.
24. Reinstall the shift rod rubber.
25. Reinstall the Inner and Outer Shift Levers.
26. Reinstall the Front Drivers Footboard using the OEM fasteners.

MODIFICATION OF FRAME:

1. Mark frame as shown then cut.
2. Cut frame as close to the Shock boss as possible.

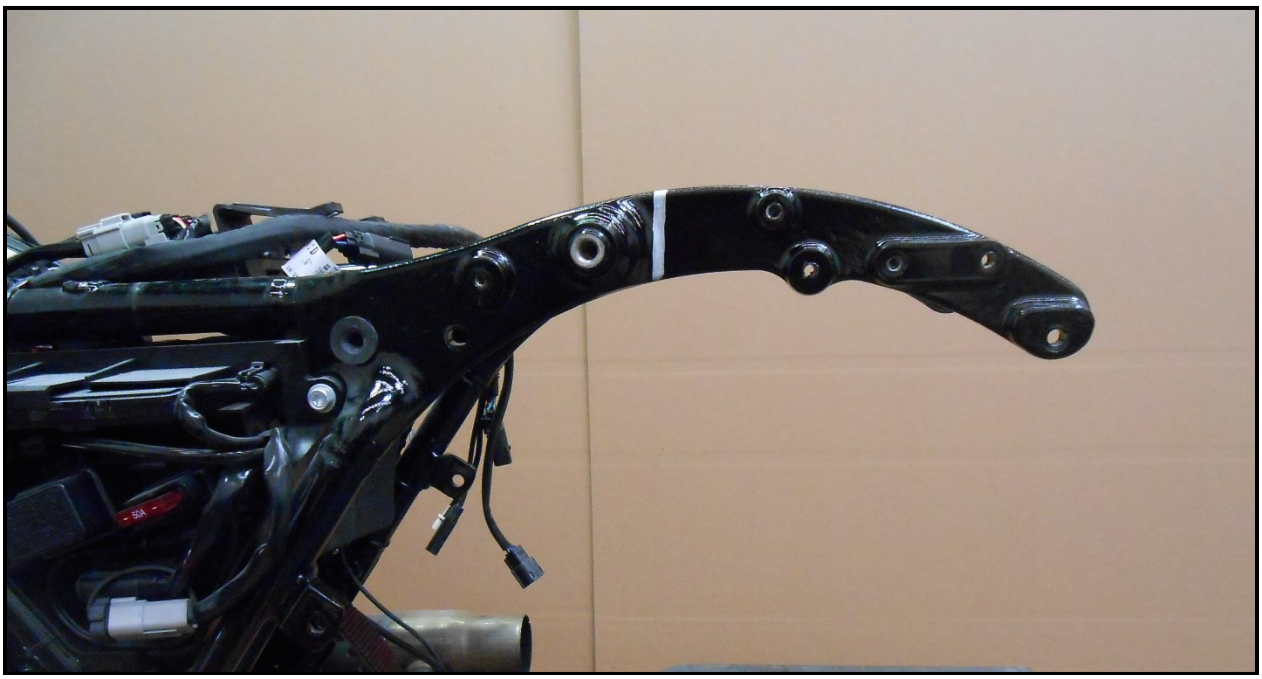

3. Use the Drivers Backrest Mount as a guide.

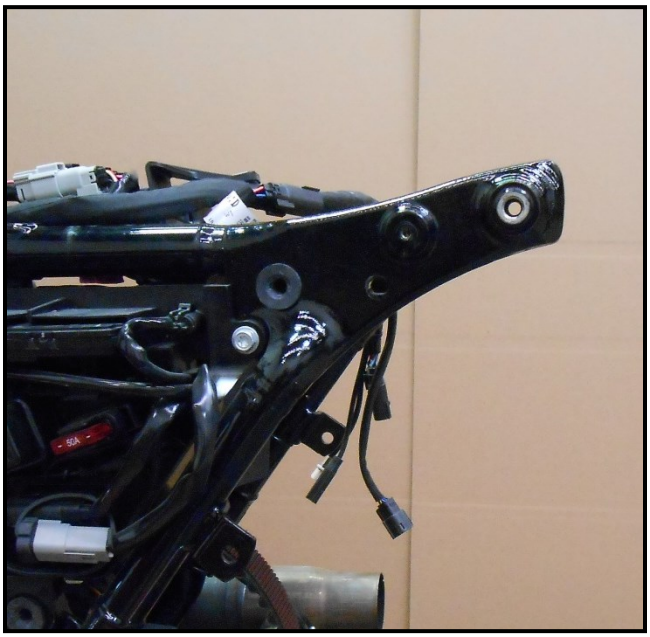

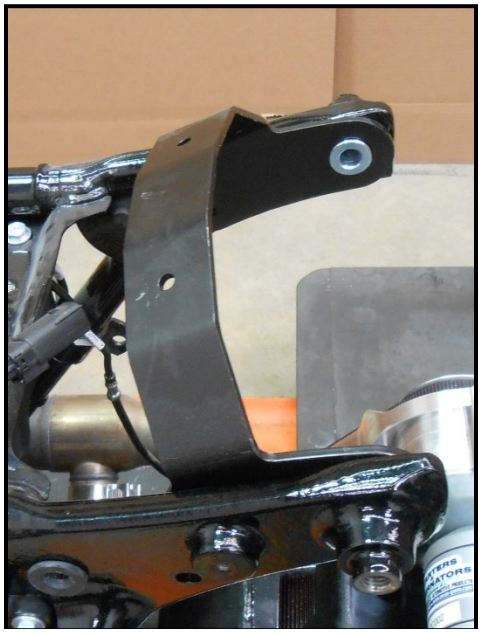

4. ENSURE BATTERY HAS BEEN REMOVED! Cut battery box in shaded areas as shown below.

The battery box shown is from a 2009 – 2013.
2014 and newer Battery box is to be trimmed the same.

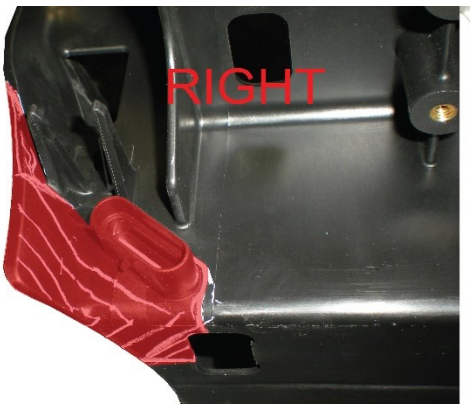

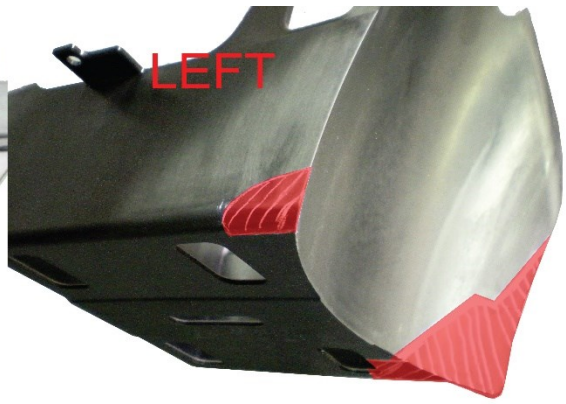

5. 2014 and Up, Unclip the rear brake line from the side of the battery box and pull it rearward to gain length.

Rear Suspension Unit Installation:

1. Install the Drivers Backrest Mount using two 5/16 – 18 x 1 1/2 HHCS with flat washers thru the front frame thru holes then secure with flat washer and nyloc nut.
2. Insert the Stud Plate into the holes of the Backrest Mount. Place the two Retaining Washers over the studs.
3. Install two frame spacers on the inside of the upper shock mount location.
4. Make sure that the Right Rubber Engine Mount is still in place.
5. Place Suspension Unit behind prepared motorcycle as shown below. Using a small Jack under the Oil Pan and a Jack under the Suspension unit.
6. A small floor jack works great under the front of the Drive Support to align the Rear Fork holes.

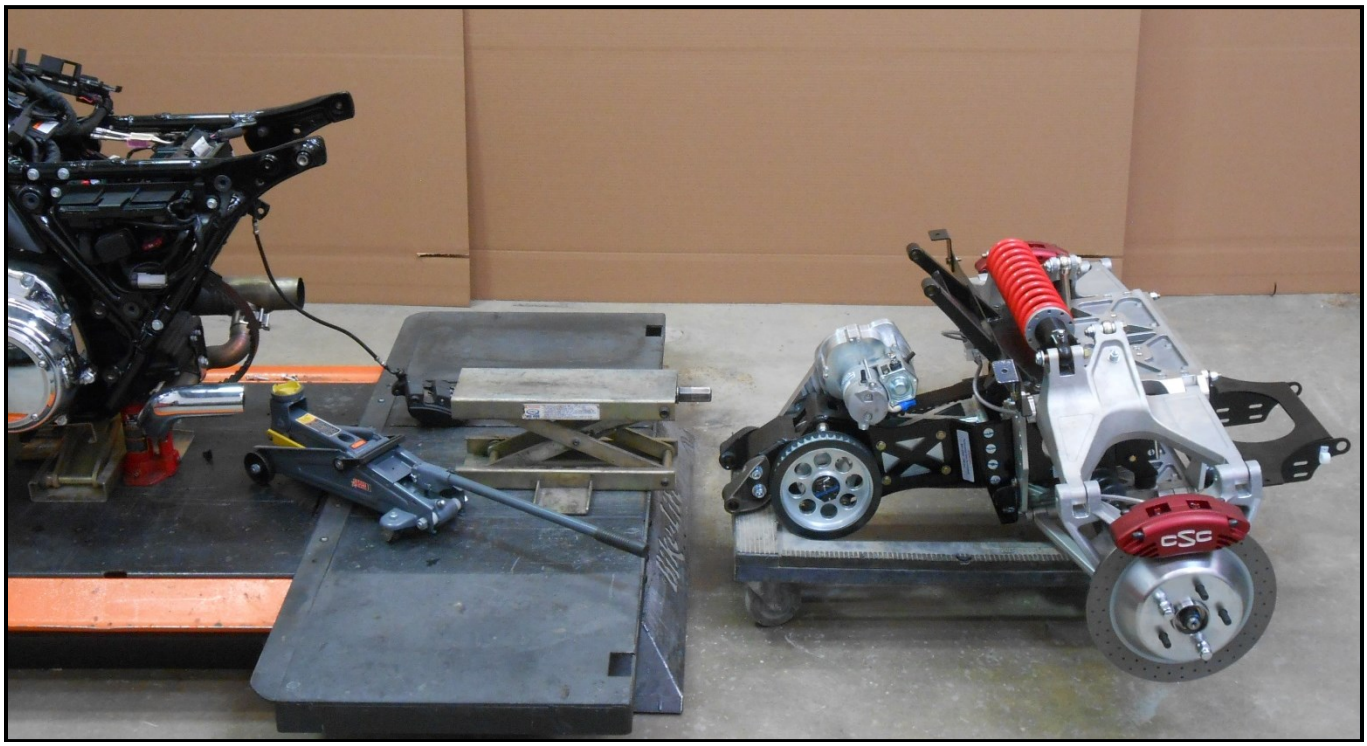

7. Slide Suspension unit as far forward as possible and install Drive belt onto Drive Sprocket.

8. Using two 1/2 - 13 x 3 1/4 HHCS and two 1/2 flat washer with thread locking agent. Install the Intermediate Mount to the inside of the upper Shock mounting holes. Do not tighten.
9. Raise the front Jack until the hole through the Transmission for the Rear Fork Pivot is in the center of the two holes for the Rear Fork Bracket.
10. Apply a light coating of Anti Seize Compound to the Rear Fork pivot Shaft.
11. Insert the shaft from the left. The Rear Fork Pivot Shaft will go thru the left side Drive Support Bushing, Transmission, right side Drive Support, right side Engine Mount, and thru the frame.
12. Loosely install the Right Rear Fork Pivot shaft Nut and Cup Washer onto the Rear Fork Pivot Shaft. Apply thread locking agent.
13. Install the Left Rear Fork Bracket using the OEM two 7/16 – 14 HHCS. Ensure the locating pin on the back side of the Left Rear Fork Bracket is in the mating slot of the Rubber Engine Mount.
14. Torque the Rear Fork Pivot Shaft Nut to 40-45 FT-LBS.
15. Remove two OEM 7/16 – 14 HHCS on the Left Rear Fork Bracket.

16. Fasteners shown in position.

2009 – 2013 Motorcycles:

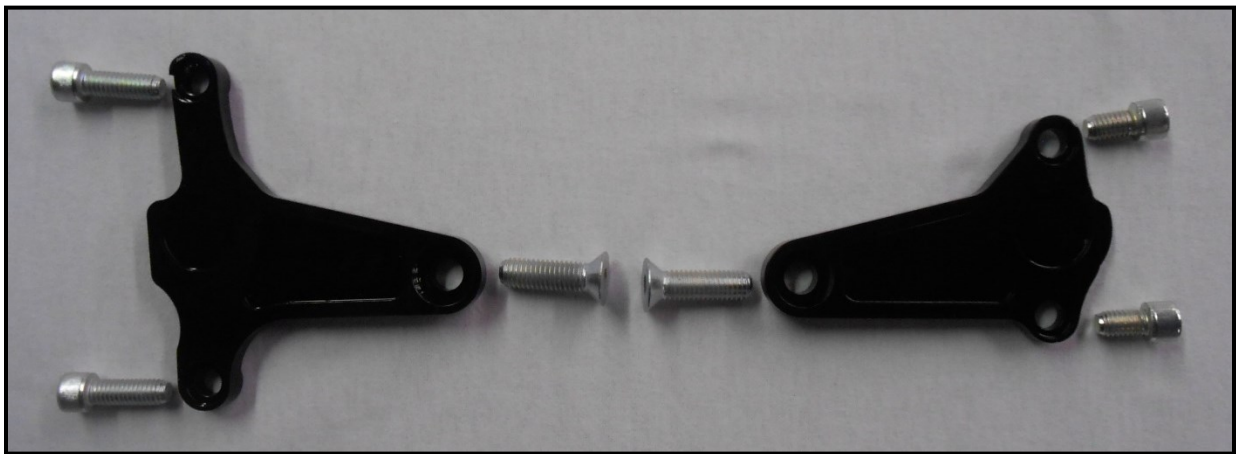

2014 – Current Motorcycles:

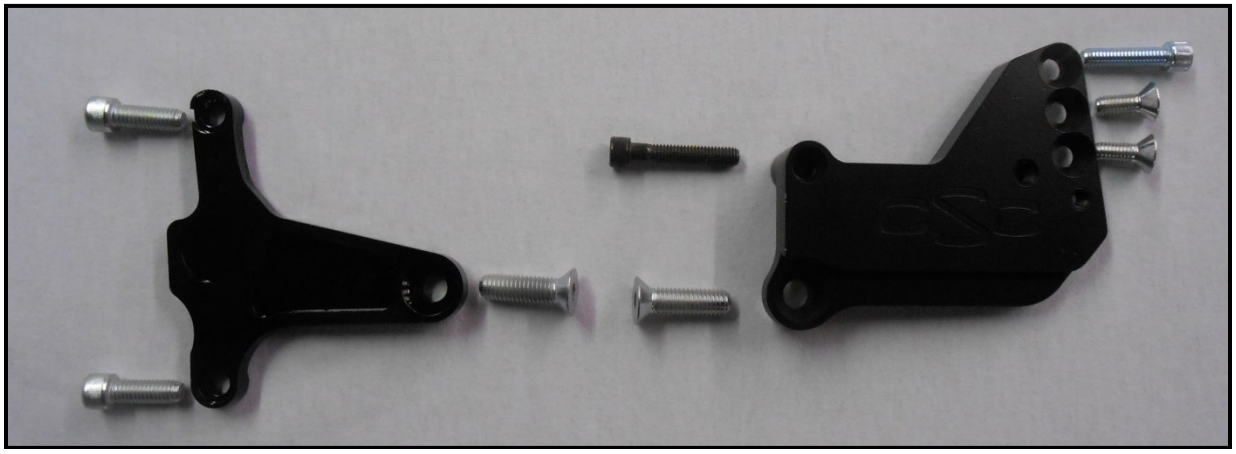

2009 - Current Left side:

17. Install the Left CSC Frame Adapter with two 7/16 – 14 x 1 1/4 SHCS using thread locking agent.
    Torque to 38 - 42 FT-LBS.

2009 – 2013 Right side:

18. Remove two plastic plugs in the threads then install Right Frame Adaptor by using 7/16 – 14 x 3/4 SHCS. (apply thread locking agent).

2014 – Current Right side:

19. Install the Right Frame Plate by first removing the lower rear subframe bolt, then installing the CSC Right Frame Mount Plate.
20. Secure it with two 3/8 – 16 x 1 FHSCS in the middle two vertical holes (depending on your desired passenger footrest position) and one black 3/8 – 16 x 2 SHCS threaded into the lower subframe bolt hole using thread locking agent on all fasteners.

21. Install the Left Frame Mount with one 1/2 – 13 x 1 1/2 SHCS thru the Frame Adaptor threading into the forward boss. Use thread locking agent.
22. Insert two 5/16 - 18 x 1 3/4 SHCS into the upper and lower bosses of the Frame Mount then thru the tabs on the Suspension unit.
23. Using two 5/16 flat washers and two 5/16 - 18 nyloc nuts tighten the three SHCS.
24. Repeat for the Right Frame Mount.
25. Now Torque the Shock bolts left loose from before.

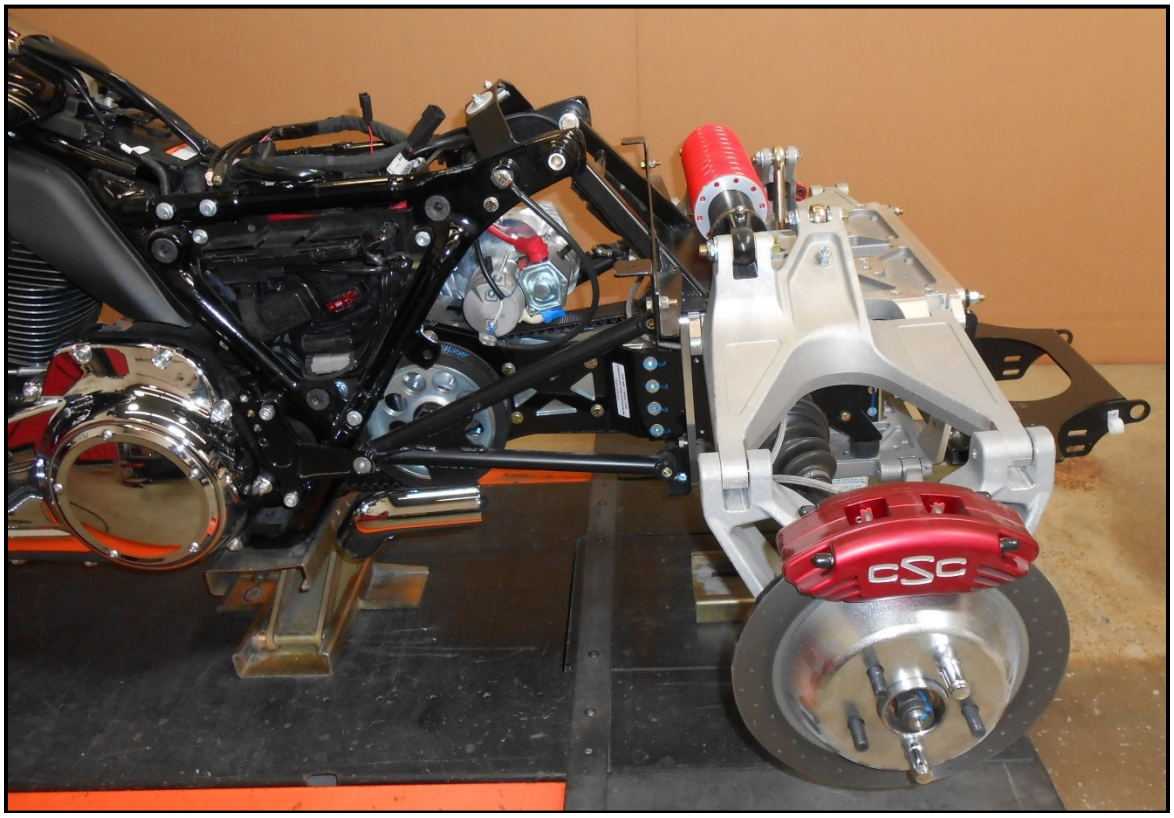

Tighten the four 1/4-20 X 3/4 FHCS left loose by CSC to allow suspension alignment. See RED circles below.

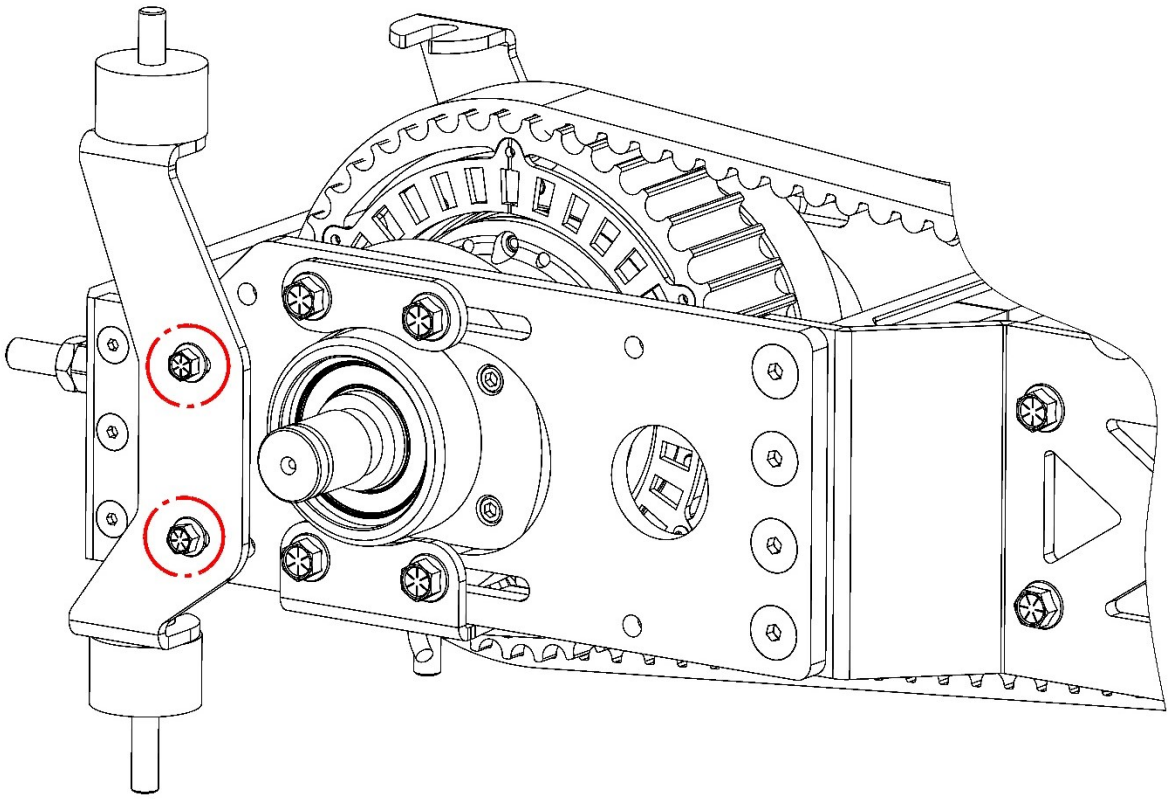

2009 - 2013 Brake Line Installation:

<u>IF A.B.S. Equipped refer to A.B.S. installation instructions now.</u>

1. Remove the two wire clips from the rear stop lamp switch.
2. Remove the Banjo Bolt from the Rear Master Cylinder and save for reinstallation.
3. Remove the Rear Brake Hose.
4. Remove the Rear Stop Lamp Switch from the junction in the Rear Brake Hose.
5. Re-clamp the Wire Harness Clips that were previously used to clamp the Rear Brake Hose.
6. Reinstall the Rear Stop Lamp Switch into the new Rear Brake Hose. Use proper thread sealant on the Rear Stop Lamp Switch.
7. Route new Rear Brake Hose with the bent banjo fitting towards the Rear Master Cylinder. The Rear Brake line will be on the outside of the Rear Master Cylinder. See Photo.
   Reinstall the OEM Banjo Bolt and two new Crush Washers. Install the bent banjo fitting onto the Rear Master Cylinder. Torque to specification.

8. Route the Rear Brake Hose along the Frame.
9. Use Cable Ties to hold the Rear Brake Hose to the Frame.
10. Install the two wiring connectors back onto the Rear Stop Lamp Switch.
11. Route the Rear Brake Hose to the inside of the Frame and onto the Distribution Block.
12. Using the provided new Banjo Bolt and two Crush Washers. Install the straight banjo fitting onto the Distribution Block.
13. Using Cable Ties secure the Rear Brake Hose to the Frame.

2014 – Up Brake Line Installation:

1. Remove banjo bolt from OEM rear caliper. Discard rear caliper.
2. Route the OEM rear brake hose along the frame to the CSC distribution block.
3. Using the provided new banjo bolt and two crush washers, install the OEM brake line onto the CSC distribution block.
4. It may be necessary to bend the OEM hard line rearward to gain enough length.

ABS brake equipped bikes.

1. Route the ABS sensor wire up to the ABS control module and plug it into the OEM wheel speed sensor plug.
2. Confirm that the air gap between the sensor and the trigger wheel is .050 of an inch.
3. Use cable ties to hold the rear brake hose and the sensor wire to the frame mount(s).

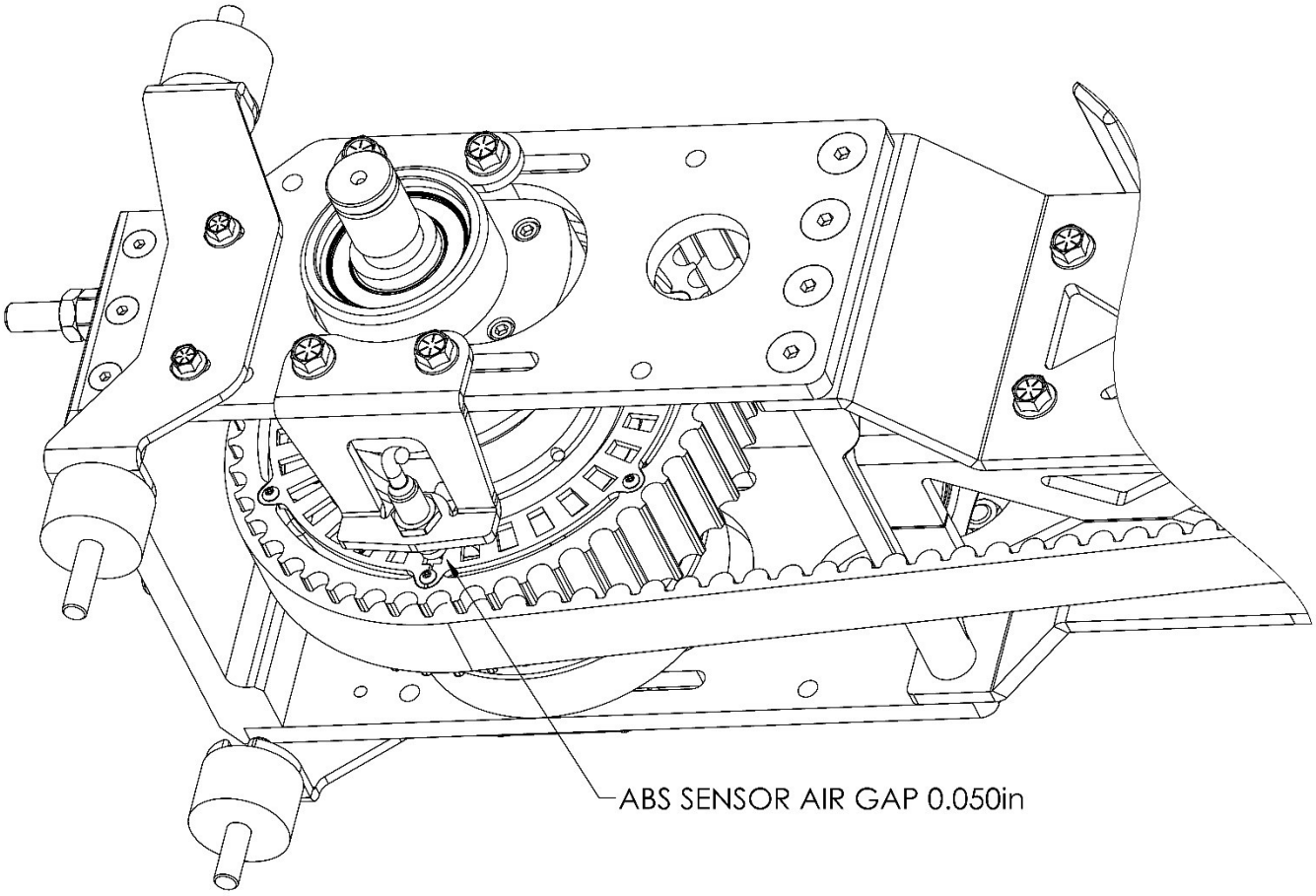

Brake bleeding procedure:

NOTE: If ABS equipped, we recommend you DO NOT use a vacuum bleeder, just hand bleed.

1. Using correct brake fluid, fill Rear Brake Master Cylinder Reservoir.
2. Using a vacuum bleeder, follow this procedure **carefully**.

   Rear caliper outside bleed valves first, then insides on both sides.

3. Hand bleed the system using the above sequence until all air is removed from the lines.
4. Allow the bike to sit for a minimum of 20 minutes and recheck the pedal travel.
5. If there is excessive pedal travel on the first pump, repeat steps 3 and 4.

Link to CSC Belt Tensioning video:

http://www.californiasidecar.com/support.html

Setting up the Sonic Tension Meter:

1. Turn power on, push Select then 1.
2. Using the charts below in Front and Rear belt tensioning push Mass then the numbers, Width and so on.
3. For the Rear belt push Select then 2. Reverse belt can be number 3 and so on.

Using the Sonic Tension Meter:

1. The microphone placement over the belt is critical.
    a. The microphone should be in the middle of the belt width-wise.
    b. The microphone should be equally in-between the two Sprockets.
    c. The microphone should be between ¼ and ½ an inch above or below the Belt.
2. Turn the Sonic Tension Meter on.
3. Ensure that the correct setting is displayed on the LCD screen.
4. Push MEASURE then gently tap the Belt with a wrench while holding the microphone in the correct position. A measurement in Lbs. of single span tension should display. If not continue tightening the Belt until a reading is displayed.
5. In noisy environments the Sonic Tension Meter may display errant numbers. If so use in a quieter area.
6. Always take at least THREE readings of the Belt tension and average the THREE readings to determine the actual tension of the Belt.

Tensioning the Front Drive Belt:

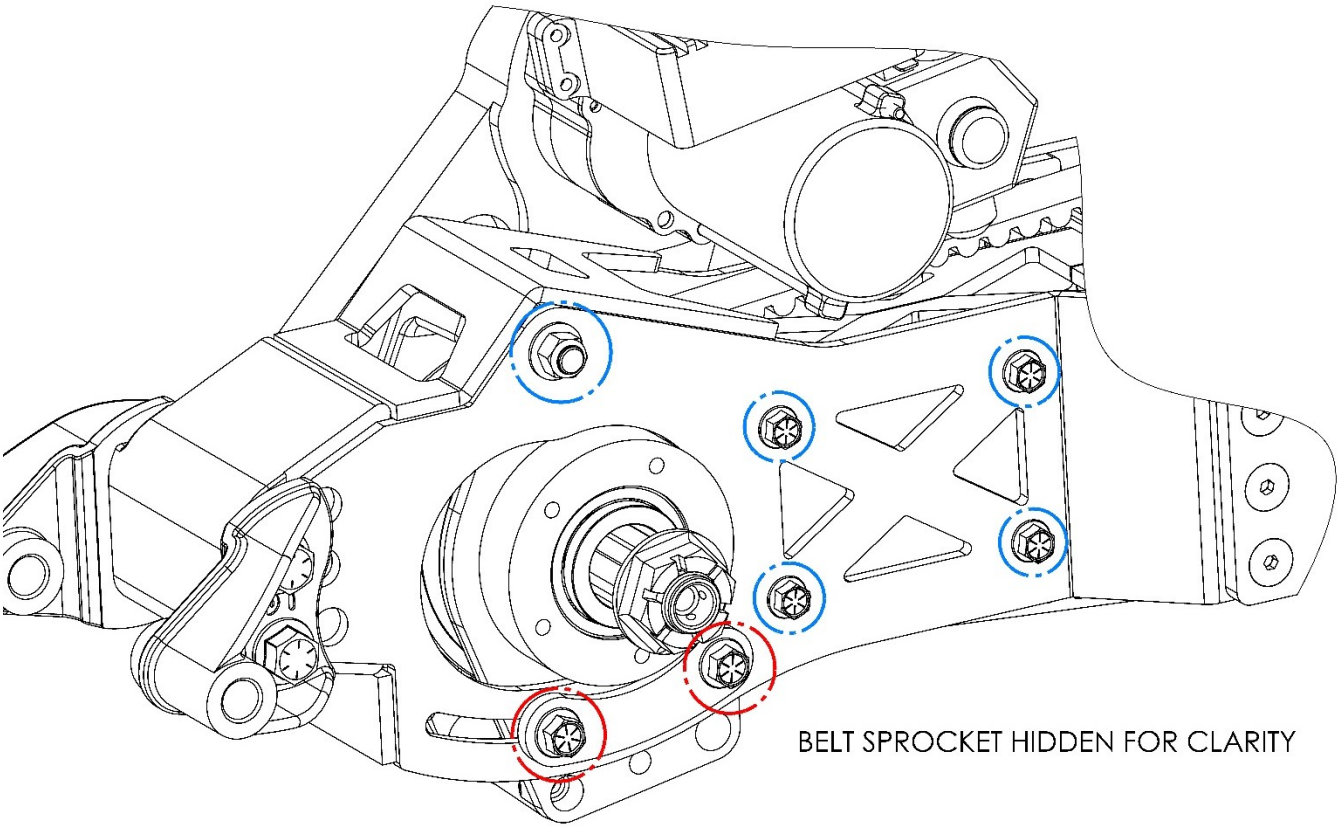

1. Loosen the four clamping FHCS two per side. **RED** circles.
2. Tighten the Rear Drive Belt adjuster nuts until the slack is taken up on the Front Drive Belt.
3. Use the correct setting on the Sonic Tension Meter.

Stock Gearing	**Performance Gear Set**
Mass 007.9 g/m	Mass 007.9 g/m
Width 020.0 mm	Width 020.0 mm
Span 0341 mm	Span 0338 mm

4. Check Front Drive Belt tension.

20mm Wide x 85 Tooth Belt: 130 - 150 lbs. single span tension.

5. Once the correct belt tension is achieved tighten all fasteners, Eight FHCS and one nyloc nut. **RED** and **BLUE** circles shown above, both sides.
6. Verify belt tension.
7. If incorrect start back at step 1. If correct proceed.

Gravel Pan:

If installing Ground Effects install the middle mount now.

1. Install the chrome clamps on the crash bar.
2. Lay Ground Effects bar in place under the motorcycle frame.
3. Install the front of the bar in the chrome clamps with two 3/8-16 x 1 1/4 HHCS, flat washers and nyloc nuts.
4. Raise the rear of the bar up to the Frame Mount tabs and secure with two more of the same HHCS.

5. Install Gravel Pan with three 1/4-20 x 3/4 FHCS in the rear. Bolts up from bottom.
6. Secure the front with two 1/4-20 x 5/8 FHCS and 1/4-20 FHNN to the Frame Mount Tabs.

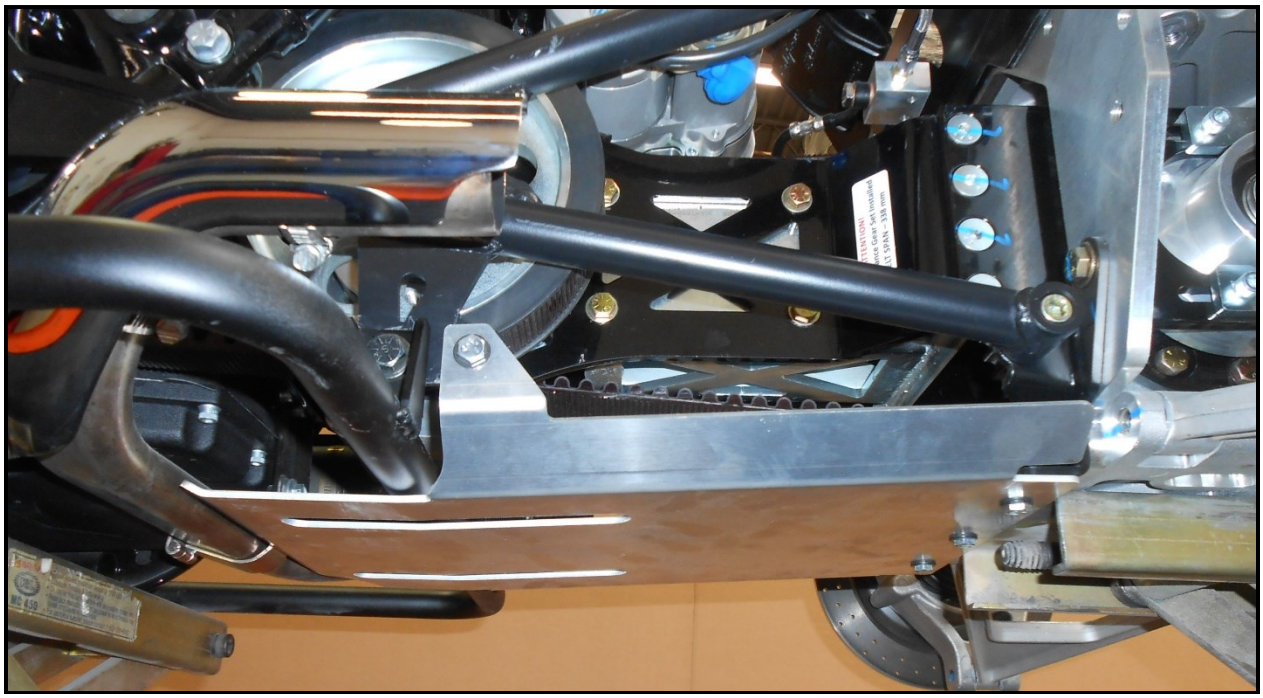

Exhaust Mount Installation:

1. Place the Left Exhaust Mount against the left side of the Body Frame.
2. Install three 5/16 – 18 x 1 1/4 HHCS and three 5/16 flat washers thru the Exhaust Mount and the Body Frame.
3. Install Trailer Hitch now if equipped.
4. Loosely install three 5/16 flat washers and three 5/16 – 18 nyloc nuts.
5. Install the right side with the same procedure.

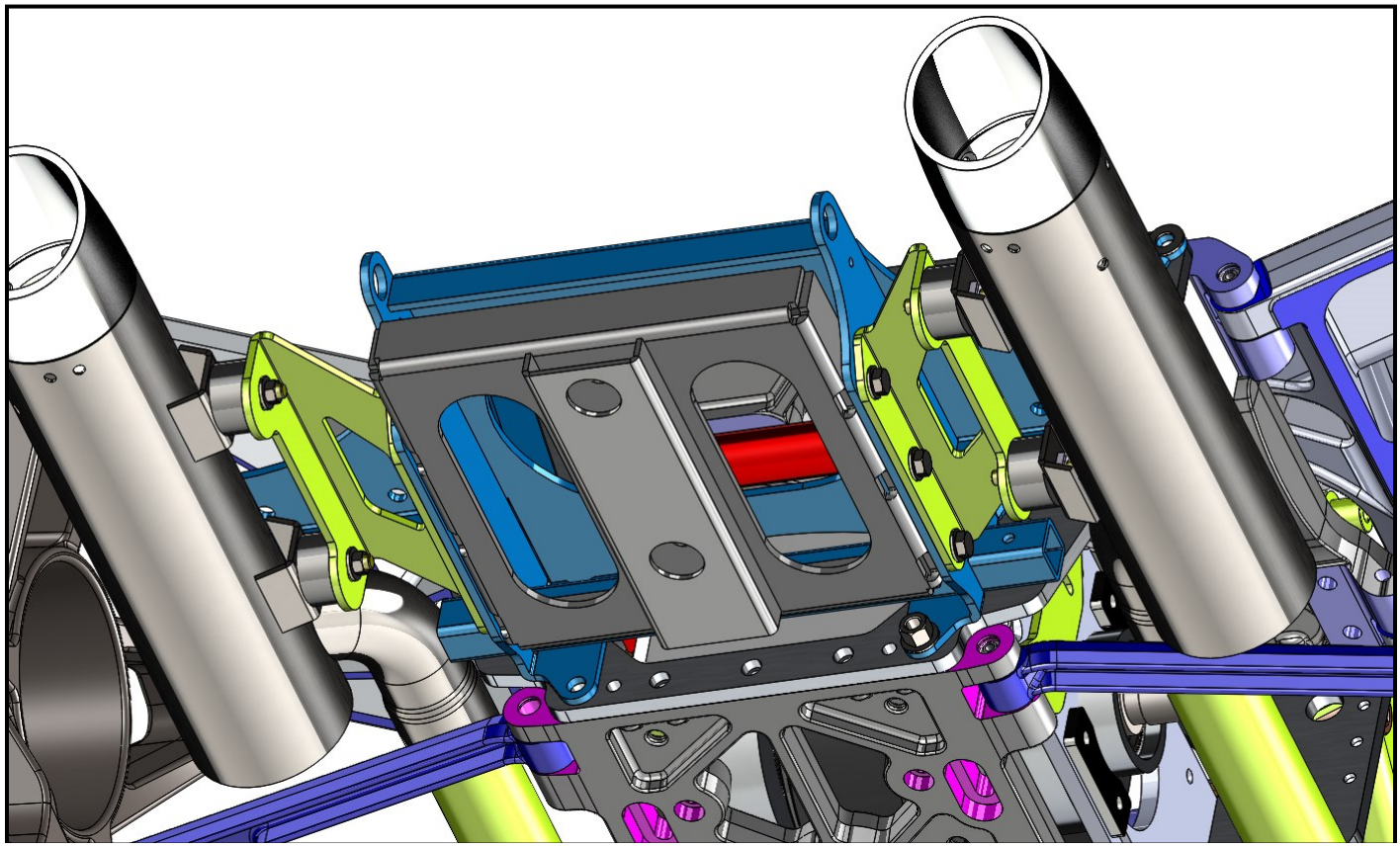

Exhaust Installation:

1. Install the Rubber Mounts onto the Mufflers.
2. Place one stock Muffler Clamp onto each Rear Exhaust Pipe.
3. Slide the Left Rear Tail Pipe onto the Left Head Pipe.

4. Slide the Right Rear Tail Pipe onto the Right Head Pipe.
5. Place two new Exhaust Clamps onto the Mufflers and slide the mufflers onto the Left and Right Exhaust Pipes.
6. Install four 5/16 – 18 nyloc nut onto the Rubber Mounts.
7. Just secure but not tighten the Mufflers so they are as low as possible. Tighten the Exhaust Clamps.
   Note: Insure there is a 1/2 inch air gap around the inner C.V. joint

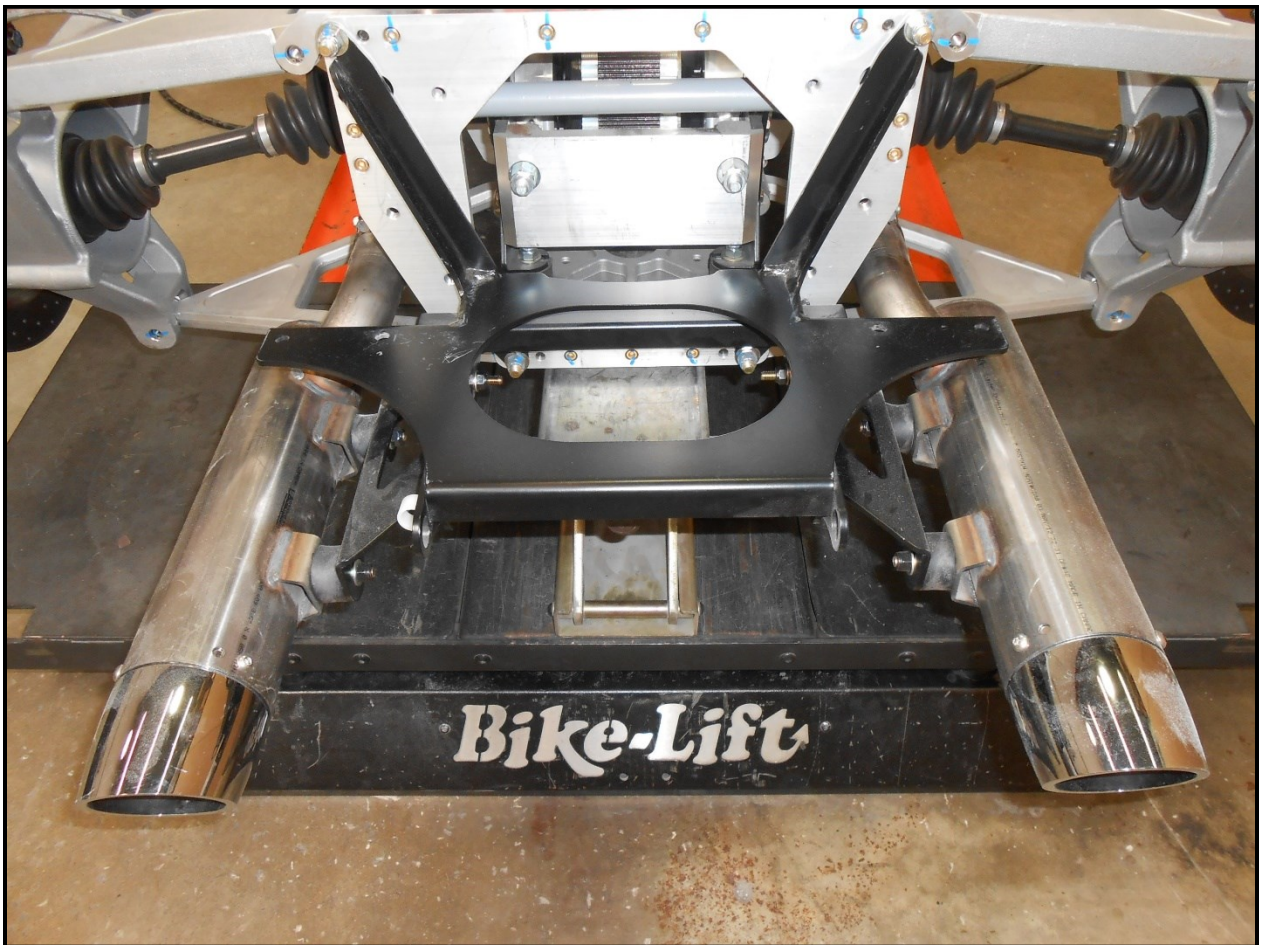

Tensioning the Rear Drive Belt:

1. See diagram below.

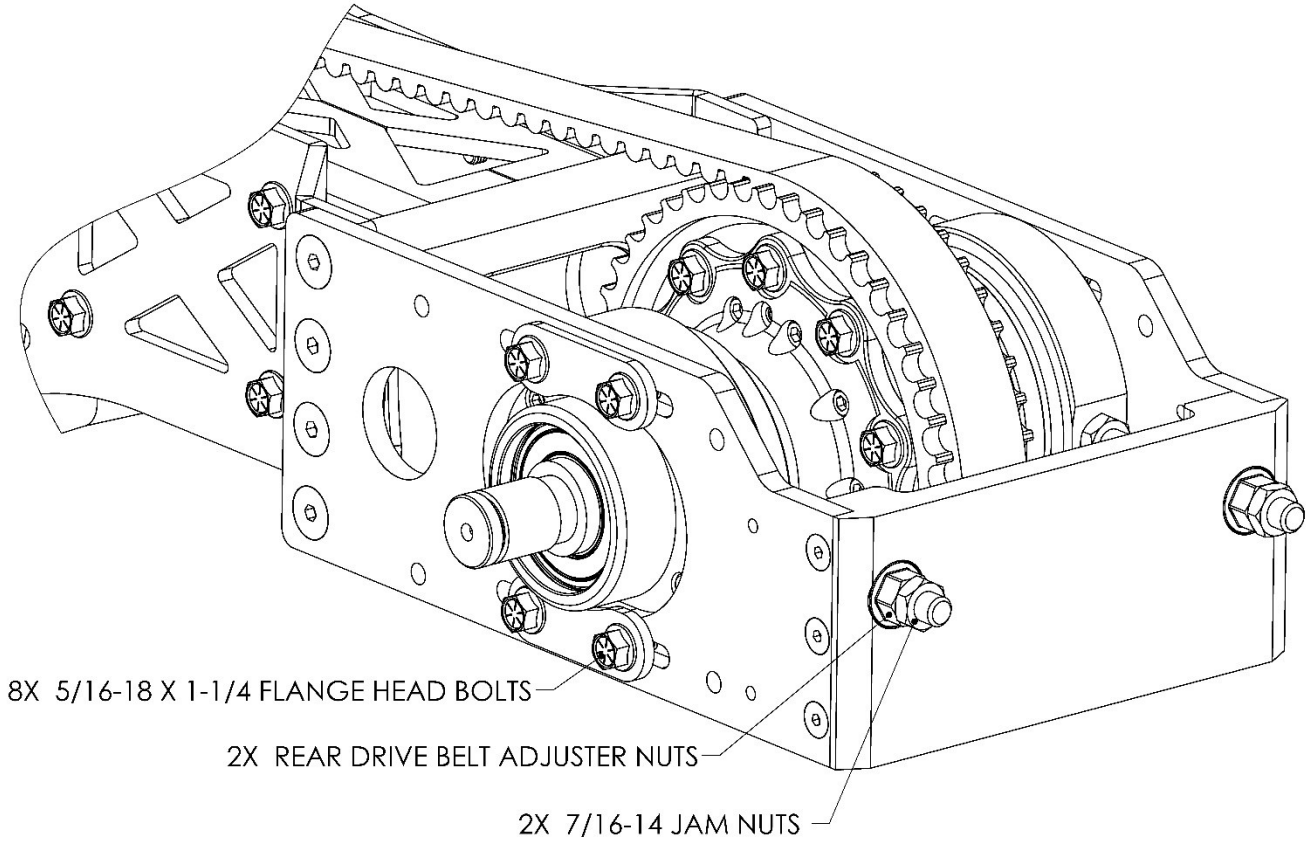

2. Tighten the Rear Drive Belt Adjuster nuts until the slack is taken up on the Rear Drive Belt.
3. Use the correct setting on the Sonic Tension Meter.

   MASS 007.9 g/m
   WIDTH 030.0 mm/R
   SPAN 0442 mm
4. Check Rear Drive Belt tension.
5. 30mm x 100 tooth belt: <u>130 - 150 lbs</u>. of single span tension.
6. In the next step you are going to run the engine. Please be aware of the safety of all those involved. Make sure you have at least two lug nuts on each rotor and that they are tight.

7. To finish alignment, the belt must have at least 0.040in clearance between edge of belt and fence on front Rear Drive Sprocket. Check this by starting the engine and placing it in second gear and simply let the engine idle. Checking the alignment by eye and centering the belt as it spins. If belt has correct clearance, go to step 9. If it does not have clearance, proceed to step 8.
8. Use the Left and Right Rear Drive Belt Adjuster Nuts to align belt in order to achieve the necessary belt clearance. NOTE: The belt will always track to the side of the sprocket that is the loosest. Repeat step 4.
9. Once the correct belt alignment and single span tension is achieved, tighten the eight 5/16 – 18 x 1-1/4 FHCS that go into the Carrier Bearing Support Housings.
10. Install two 7/16 – 14 hex jam nuts onto the Rear Drive Belt Tensioning Studs and tighten.
11. Verify belt tension and alignment.
12. If all is correct move on to next step. If not loosen clamping bolts and return to step 4.

Suspension Setup:

Use this chart to select the correct spring preload. Rotate the adjuster nut on the shock until the spring is set to the desired length. Now tighten the set screw on the adjuster nut or tighten the lock nut on the fully adjustable shock.

Load: Typical weight the customer adds to the stock trike. This includes riders, luggage, and weight of a trailer tongue.

When in doubt assume a higher weight than actual.

Length: Suggested length the spring should be adjusted to with the suspension completely unloaded and the preloader adjusted all the way out if equipped.

DAYTONA								
SHOCK with RED SPRING								
	LOAD	LENGTH		LOAD	LENGTH		LOAD	LENGTH
250 LB/IN SPRING	100	13 1/16	300 LB/IN SPRING	100	13 1/4	350 LB/IN SPRING	100	13 7/16
	200	12 7/8		200	13 1/16		200	13 1/4
	300	12 5/8		300	12 7/8		300	13 1/8
	400	12 5/16		400	12 5/8		400	12 15/16
	500	12 1/8		500	12 7/16		500	12 3/4
				600	12 1/4		600	12 5/8
							700	12 1/2
							800	12 3/8

Install preload adjuster now if equipped. Refer to separate installation instructions.

These lengths are only estimates. If you would like to confirm a correct setting, load the completed trike to the customers typical riding situation and measure from the ground to the middle of the lower suspension plate. The center hole should be 5.75” – 6.25” from the ground.

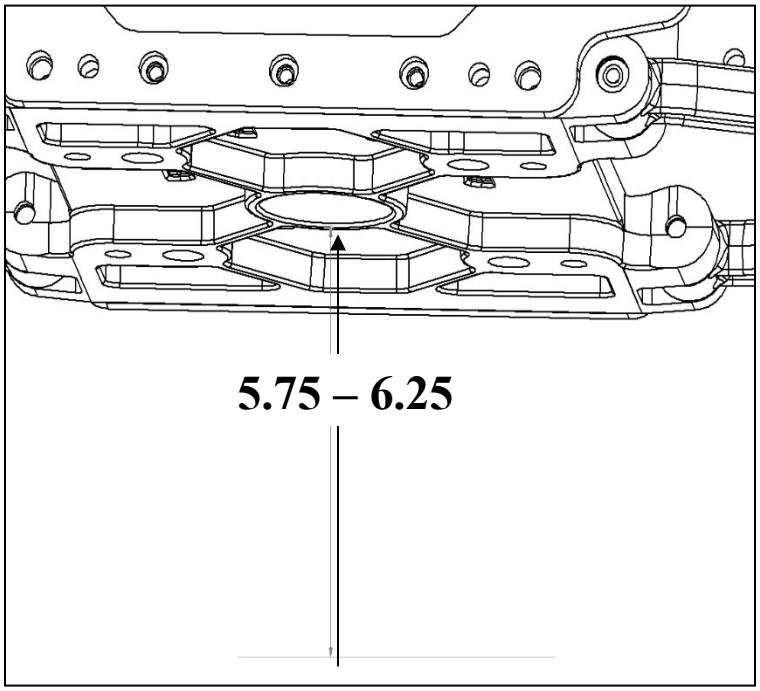

Install GFX module if equipped:

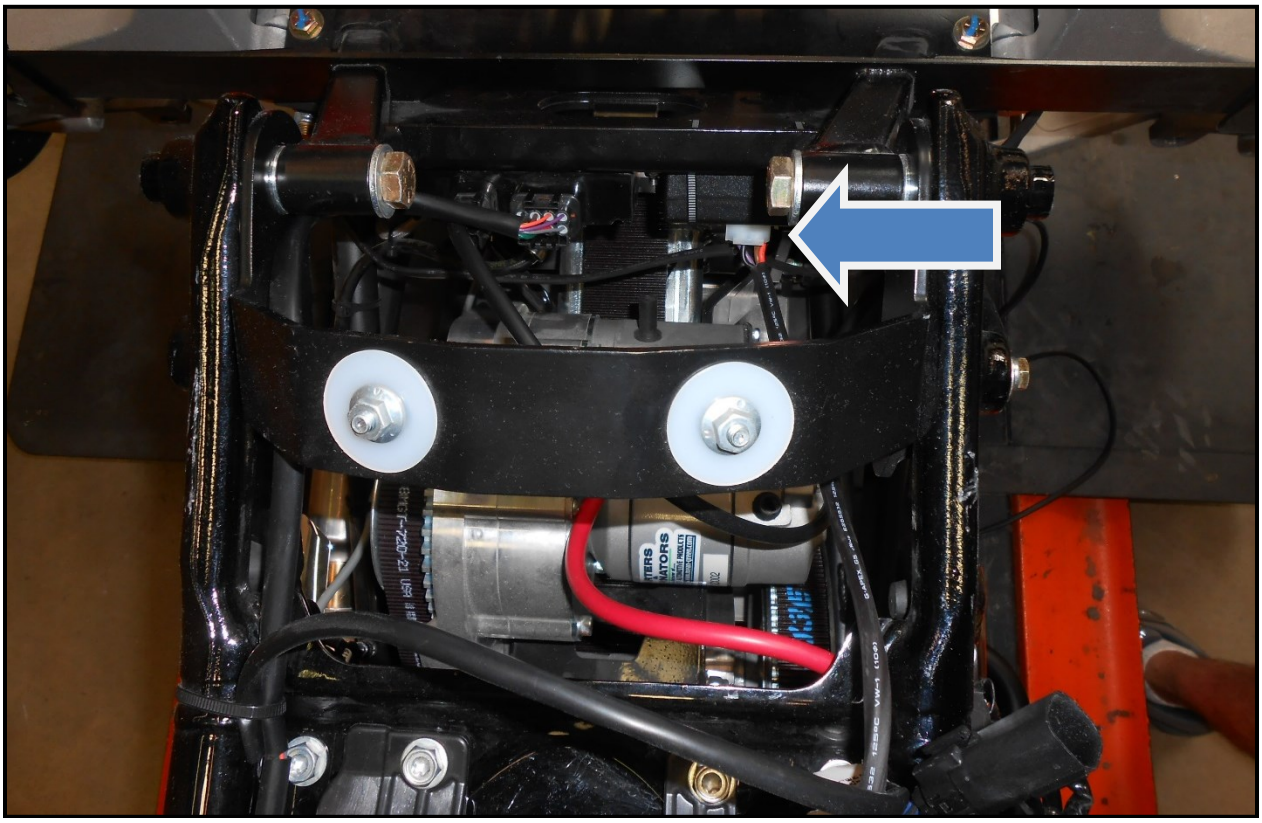

1. Do all the BCM wiring now.
    a. Bank Angle Simulator, *Next page*
    b. 2 pin at fender plug, *Below, steps 3-5*
    c. Neutral wire for Electric Reverse, *Separate*
2. Refer to Electric Reverse Instructions now to complete the wiring and belt tension.
3. Locate the 2 pin plug at the fender plug location and route that 2 wire harness forward to the BCM.
4. Connect the Green wire to the Right Front turn signal wire, (Blue/Orange) at the BCM.
5. Connect the Yellow wire to the Left Front turn signal wire, (Blue/Pink) at the BCM.

These wires must be connected for the Ground Effects and the trailer plug to function properly.

Bank Angle Simulator H-D 2014 - 2019:

1 – Remove the motorcycle Body Control Module (BCM) and unplug the connector. With a straight slot screwdriver, free the connector lock and wire seal boot. Slide out the grey lock. Run the WHITE Signal wire from the provided CSC Bank Angle Simulator through the wire seal boot and plug the pre-crimped terminal into the BCM connector in POSITION B4.
Use extreme caution to prevent bending the pin.
Ensure the pin is seated by looking at the connector plugging face for evenness.

2 – Connect remaining CSC BAS harness wires:

WHITE, Signal to BCM (done in step 1)
BLACK, To Chassis Ground
ORANGE,To Switched 12V power, 2 pin plug on Fender plug adaptor.

3 – Replace the seal boot and lock. Plug the connector back into the BCM and place the BCM into the holder.

Body installation:

1. Lower the body onto the trike with the front of the body pointing downward until it comes to rest onto the upper tray and body frame as shown.

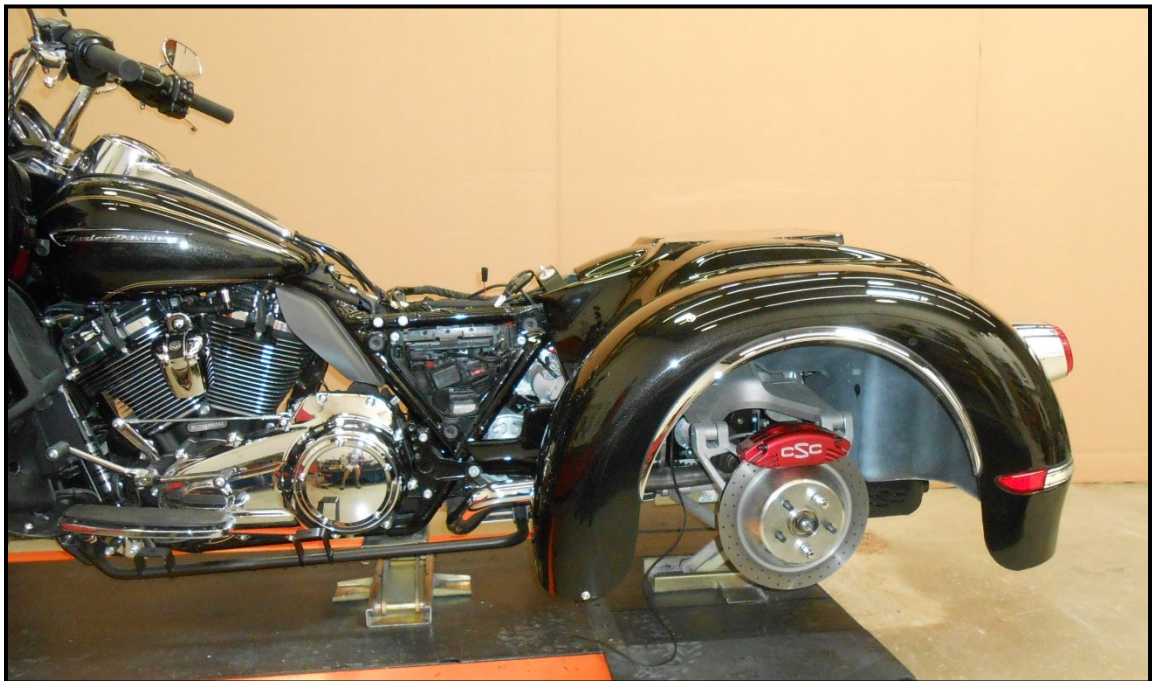

Tour Pak Installation:

1. With a small bead of silicone, seal the thick spacers to the tour box, use the T-head nuts to align the spacers.
2. Apply the thick foam to the front and rear recessed area 2 layers thick as shown.
3. Now use the thin to connect the thick on the left and right side as shown.
4. Allow the silicone to dry, this will help align the T-head nuts while installing the tour box.
5. These foam seals will seal the tour box to the top of the trike body.

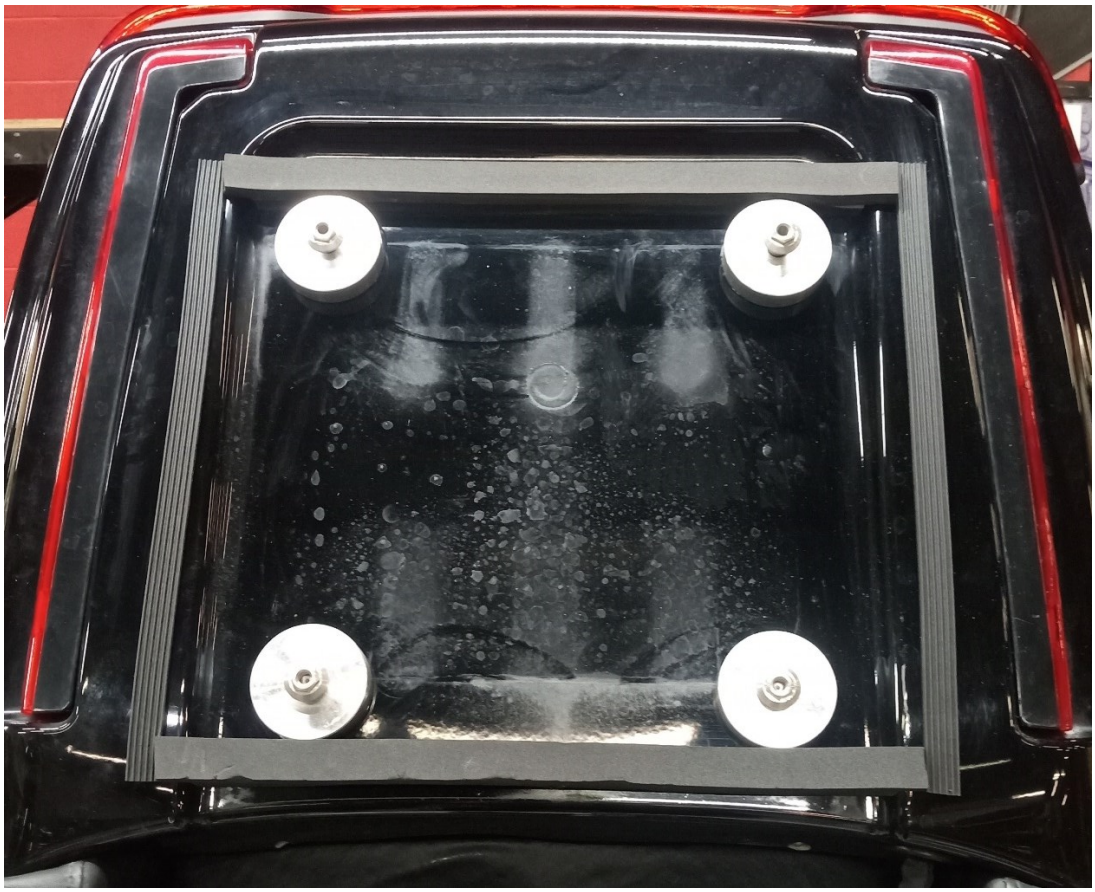

6. Apply silicone sealant to the bottom of the four aluminum spacers and in the holes in the body.
7. Confirm that the holes in the body are 1/2 inch.

8. Lower Tour Pak down onto the body aligning the studs.
9. Install four 1/4 - 20 T-head nuts with four 3/8 fender washers, up thru the predrilled holes in the body, then the spacers and thread them onto the tour box studs.

Trike body alignment:

1. Route the Trunk Emergency Release cable along the right side of the Frame and tie just behind the right Side Cover.
2. If installing Ground Effects, see separate instruction.
3. Connect Body Wiring Harness connector under the Frame to the Rear Fender Wiring Harness Connector. **Plug in the adaptor between the CSC body plug and the 2014 H-D fender plug.**
4. Route the Fuse-able Link and the White Wire towards the Battery.
5. Connect the 2 pin plug previously installed and the Ground Effects plug if equipped.
6. Install the Right and Left Side Covers.

It may be necessary to grind the bottom front of the right Side Cover as shown. Trim the marked area.

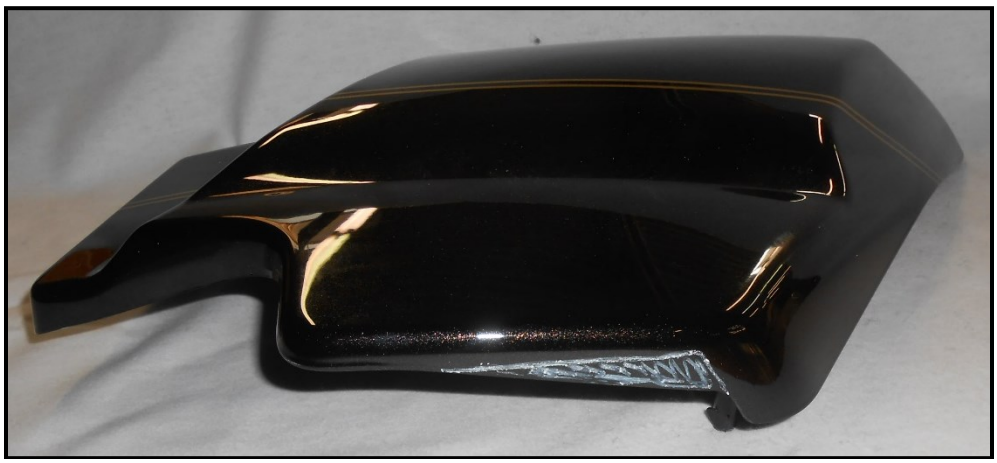

After Grinding

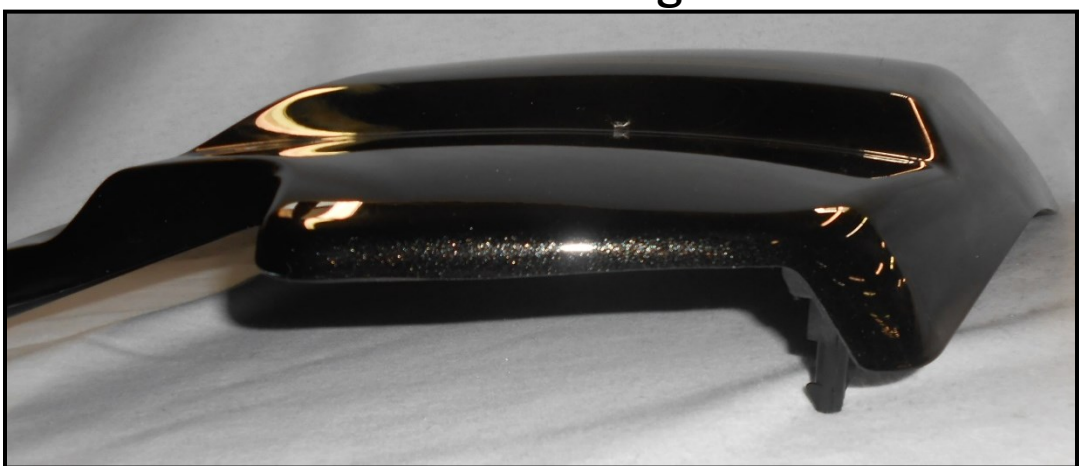

7. The Trike Body can move left, right, forward, backward, up, down, and angled. Shimming with the provided 1/4 and 1/8 Rubber Washers may be required to get the Trike Body into alignment.
8. First raise the front of the body to obtain the vertical location around the Side Covers.
9. Then slide the body front to back to get the horizontal location around the Side Covers.
10. With the body temporarily held into place, raise the adjustable 90° body support brackets until they seat against the body's inner liner.
11. Tighten the two 5/16 – 18 x ¾ HHCS and two 5/16 – 18 nyloc nuts on the Adjustable 90° Support Brackets.

12. Align the Trike Body left to right with the Muffler tips and Side Covers.

Securing the Trike body:

1. Using a 5/16 twist drill, drill up through the Adjustable 90° Body Support Brackets.
   Note: A small section of Trike Body Carpet has not been glued at the location of the Trike Body Frame mounting tabs to allow removal of the bolts used in shipping, and installation of the Trike Body mounting hardware. The predrilled bolt holes may need to be enlarged or relocated for Trike Body attachment to the Trike Body Frame mounting tabs. If relocation is necessary, the preexisting holes will need to be sealed with silicone sealant.
2. Using a 5/16 twist drill, drill up through the Trike Body Frame mounting tabs.
3. Insert two 5/16 – 18 x 1 ¼ HHCS, two 5/16 x 1 ½ fender washers, and rubber washers if necessary, through the holes drilled in step 2.
4. Insert two 5/16 – 18 x 1 ¼ HHCS and two 5/16 x 1 ½ fender washers through the adjustable 90° body support brackets.
5. Install four 5/16–18 nyloc nuts and four 5/16 flat washers onto the four 5/16–18 x 1 ¼ HHCS and tighten.
6. Align the mufflers in the cutouts and tighten all the Muffler hardware. HHCS, Nyloc nuts and clamps.

Reassembly of the motorcycle:

Install the passenger floorboards. Left side reuses the OEM fasteners – Right side reuses the lower OEM shoulder bolt and the upper OEM lock washer but a new upper 3/8-16 x 1 1/2 SHCS

Replace the 15 AMP "lights" fuse with the 20 AMP fuse provided.

1. Connect the red wire with Fuse Holder to the Positive Battery terminal.
2. Reconnect the negative battery terminal and the new white wire from the Trike Body Wiring Harness.
3. Replace the Seat and ¼ - 20 OEM Phillips head screw.

Final Reassembly of the motorcycle:

1. Reinstall the wheel and tire assemblies with ten m12 x 1.5 ET conical lug nuts. Torque to 75 Ft.-lbs.
2. Recommended tire pressure
    a. 15 & 16" wheels – 28 psi
    b. 17" wheels – 25 psi

From all of us at California Sidecar.
Enjoy the ride.