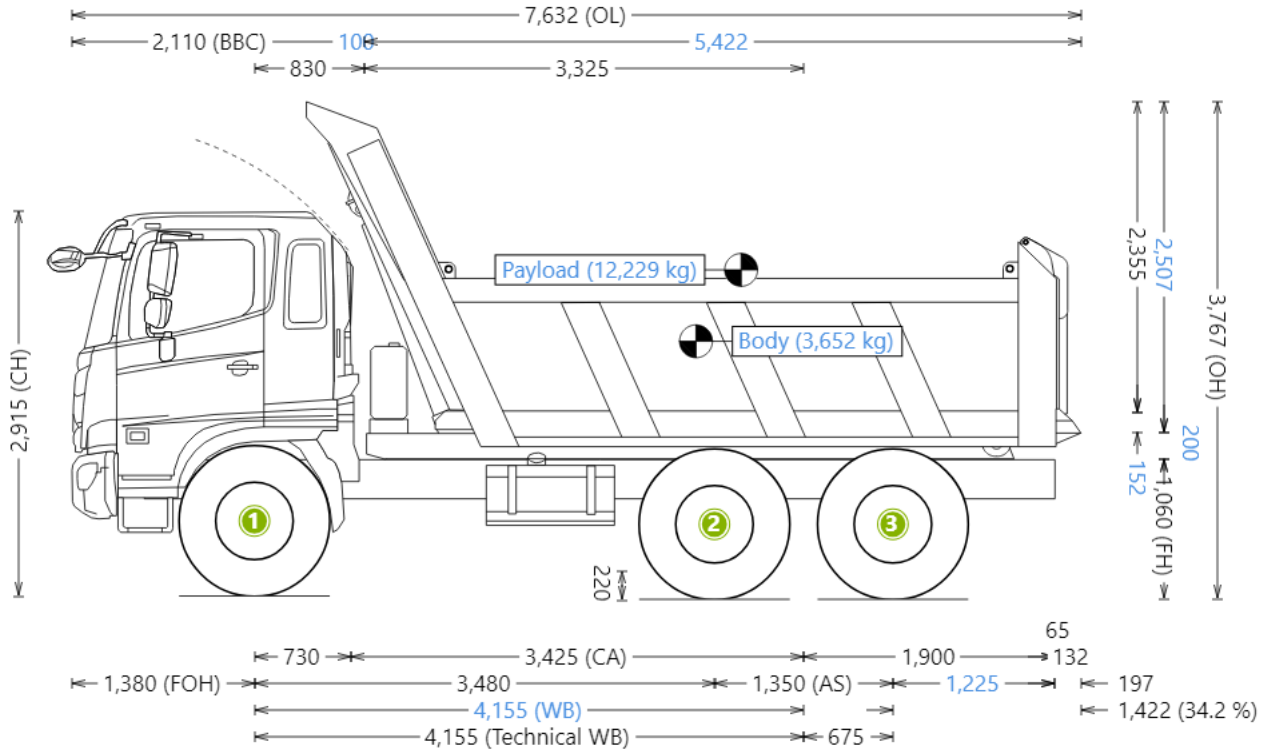

Dashboard	
Manufacturer Ratings	✔
Regulatory Compliance	✔
Bridge Permissible for Combination	28,290 kg
Cab to Body Gap	100 mm
Overall Height of Combination	-
Overall Length of Vehicle	7,632 mm

Masses Summary	*Front (1)*	*Rear (2 - 3)*	*Total*
Chassis Mass	3,531 kg	4,088 kg	7,619 kg
Fuel & Crew	209 kg	139 kg	349 kg
Fabkomp 10m3 Tipper	716 kg	2,936 kg	3,652 kg
Total Unladen	4,456 kg	7,163 kg	11,620 kg
Payload	1,392 kg	10,837 kg	12,229 kg
Gross	5,849 kg	18,000 kg	23,849 kg
Permissible	7,500 kg	18,000 kg	25,500 kg
Unused Capacity	1,651 kg	0 kg	1,651 kg
Utilisation	78.0%	100.0%	93.5%

** Refer to subsequent pages for notes and warnings*

DISCLAIMER: Information in this report is based on reasonably available data and assumptions and only constitutes estimates. The originator and supplier of the report therefore do not guarantee the correctness of the information. They shall not be liable for consequential or other loss or damage caused by reliance thereon and the recipient of the information indemnifies them against such liability.

Powered By TruckScience