BRIDGEWATER REGULATIONS AND ORDINANCES
TABLE OF CONTENTS

LAND SUBDIVISION REGULATIONS 5
Article I: Purpose 6
Article II: Authority 6
Article III: Effective Date 6
Article IV: Jurisdiction 6
Article V: Validity 7
Article VI: Conflicting Provisions 7
Article VII: Required Approval of subdivision:plan 7
Article VIII: Definitions 7
Article IX: Procedure—Pre-application 8
Article X: Preliminary Layout 9
Article XI: The Final Plat 10
Article XII: Street System 10
Article XIII: General Requirements for the Subdivision of Land 13
Article XIV: Penalties and Enforcement; Review Procedure 14
Article XV: Variances 14
Article XVI: Amendments 14
Article XVII: Appeal 14
Article XVIII: Interpretation 14
Article XIX: Subdivision Application Checklist 15
SUBDIVISION APPLICATION CHECKLIST 16
Appendix A – Guidelines for Design and Construction of Roads 26
Part I. Design 27
Design Traffic Volume 27
Right of Way 27
Design Speed 27
Sight Distance 28
Grades 28
Alignment 29
Elements of the Typical cross Section 29
Drainage and Erosion Control 29
Traffic Control Devices and Signing 29
Submission of Road Design 30
Part II. Construction 30
Bond or Escrow 30
Inspections 30
Materials 31
Layout 31
As Built or Record Plan 31
Appendix B - Guidelines for Design and Construction of Roads (Diagrams) 32
Diagrams 33
Building Regulations 42
Article I: General Provisions 43
1.1 Commercial Buildings 43
1.2 Exits 43
1.3 Foundations 44
1.4 Buildings 44

1.5 Chimney Construction 44
1.6 Electric Wiring 44
1.7 Minimum Building Area 44
1.8 Exterior Finished 44
1.9 Building Relocation 44
1.10 Seasonal Conversions 44
Article II: Enforcement 45
Article III: Takes Effect 45
Article IV: Conflicting Provisions 45
Article V: Amendments 45
Article VI: Validity 45
ZONING ORDINANCE 46
Town Map and Districts 47
Article I: Purpose and Authority 48
Article II: Title 48
Article III: Establishment of Districts and District Regulations 48
A. Districts 48
B. Zoning Map 48
C. District Boundaries 49
D. Zoning District Regulations 49
1. General Residential District 49
1a. Lake District
1b. River Road District
2. Mountain District 50
3. Commercial District 51
4. Commercial/Industrial District 51
Article IV: General Provisions 51
A. Obnoxious Use 51
B. Front, Side and Rear Yard Setback 52
C. Structure Height 52
D. Off-Street Loading and Parking 52
E. Signs 52
F. Flood Area 55
G. Removal of Natural Material 55
H. Home Business 55
I. PEMIGEWASSET RIVER SHORELINE PROTECTION 57
1. Buffers 57
2. Prohibited Uses 58
3. Minimum Lot Requirements 58
4, Erosion and Siltation Control 59
5. Non-conforming Uses 59
6. Commonly Used Water Front Parcels or Lots 59
Definitions 60
Article V. Special Provisions 61
A. Cluster Development 61
B. Waterfront Right-of-Ways 62
C. Mobile Home Park Standards 63
D. Recreation Camping Park Standards 63
E. Seasonal Conversions 63
F. Wireless Communication Facilities 64
G. Sexually Oriented Business Regulations 76

H. Box Storage Regulations 79
I. Residential Small Wind Turbine Ordinance 80
Article VI: Non-Conforming Uses 81
Article VII: Board of Adjustment 82
A. Creation, Appointment and Jurisdiction 82
B. Special Exceptions 82
C. Variances 83
D. Appeals 83
Article VIII: Administration and Enforcement 84
A. Administration 84
B. Issuing Permits 84
C. Enforcement 84
Article IX: Miscellaneous Provisions 84
A. Saving Clause 84
B. Effective Date 84
C. Amendments 85
D. Validity 85
Article X: Definitions 85
1. Abutter 85
2. Accessory Building 85
3. Building 85
4. Cluster Development 85
5. Commercial Use 85
6. Dwelling, Single-Family 85
7. Dwelling, Two-Family 85
8. Dwelling, Multi-Family 85
9. Dwelling Unit 85
10. Frontage 86
11. Group Development 86
12. Home Business 86
13. Light Industrial Use 86
14. Lot 86
15. Lot Frontage 86
16. Manufactured Housing 86
17. Non-Conforming Structure, Use or Lot 86
18. Parking Space 86
19. Steep Slopes 86
20. Street or Public Street 86
21. Structure 87
22. Variance 87
23. Wetland 87
24. Wetland Soils 87
25. Wireless Communication Facility 87
FLOODPLAIN DEVELOPMENT ORDINANCE 88
Purpose and Authority 90
Item I: Definition of Terms 90
Item II: Permit Required 93
Item III: Permit Application Review 93
Item IV: Replacement of Water and Sewer Systems 94
Item V: Information Required 94
Item VI: Governmental Permits Required 94

Item VII: Alteration or Relocation of Watercourses 94
Item VIII: Special Flood Hazard Areas 95
Item IX: Variances and Appeals 97
SITE PLAN REVIEW REGULATIONS 98
A. Base Survey 104
B. Site Plan 105
C. Site Plan Details 105
D. Additional Material or Information Required 106
MISCELLANEOUS REGULATIONS AND ORDINANCES 120
Seasonal to Year Round Conversions (synopsis) 120
Ban on Winter Parking (synopsis) 120
Public Dances 120
Dog Control Law 120

TOWN OF BRIDGEWATER, NEW HAMPSHIRE

LAND SUBDIVISION REGULATIONS

Adopted July 18, 1972

Amended August 19, 1980

Amended October 28, 1986

Amended March 8, 1988

Amended September 14, 1988

Amended April 23, 1991

Amended June 18, 1991

Amended May 16, 1995

Amended September 19, 1995

Amended June 17, 1997

Amended June 16, 2002

Amended March 13, 2007

April 2007

TOWN OF BRIDGEWATER, NEW HAMPSHIRE

LAND SUBDIVISION REGULATIONS

ARTICLE I: PURPOSE

As a means to retaining the scenic beauty of our Town and for the purpose of protecting the health, safety, convenience, prosperity and welfare of our inhabitants and to promote the harmonious, orderly and coordinated development of the Town, the following land subdivision regulations are hereby enacted.

These subdivision regulations will serve as a guide and blueprint for securing impartial handling of all subdivision plans by providing uniform procedures and standards for observance by both the subdivider and the Planning Board.

ARTICLE II: AUTHORITY

Pursuant to the authority vested in the Town of Bridgewater Planning Board by the voters of the Town of Bridgewater on June 21, 1972 and in accordance with the provision of Chapter 36, Sections 19–29, New Hampshire revised Statutes annotated 1955, and as amended, the Town of Bridgewater Planning Board adopts the following regulations governing the subdivision of land in the Town of Bridgewater, New Hampshire.

ARTICLE III: EFFECTIVE DATE

These regulations shall become effective after a public hearing as required by RSA 675:6 and upon the vote of the majority of the Board.

ARTICLE IV: JURISDICTION

1. This ordinance shall pertain to all land within the boundaries of the Town of Bridgewater.

2. For subdivisions that involve land designated as "Special Flood Hazard Areas" (SFHA) BY THE National Flood Insurance Program (NFIP):

A. The Planning Board shall review the proposed development to assure that all necessary permits have been received from those governmental agencies from which approval is required by Federal or State law, including Section 404 of the Federal Water Pollution Control Act Amendments of 1972, 33 U.S.C 1334.

B. The Planning Board shall require that all proposals for development greater than 50 lots or 5 acres, whichever is the lesser, include the Base Flood Elevation (BFE) data within such proposals (i.e. floodplain boundary and 100-year flood elevation).

C. The Planning Board shall require the applicant to submit sufficient evidence (construction drawings, grading and land treatment plans) so as to allow a determination that:

(i) all such proposals are consistent with the need to minimize flood damage;
(ii) all public utilities and facilities, such as sewer, gas, electrical and water systems are located and constructed to minimize or eliminate flood damage; and

(iii) adequate drainage is provided so as to reduce exposure to flood hazards.

ARTICLE V: VALIDITY

If any section, clause, provision, portion or phrase of these regulations shall be held to be invalid or unconstitutional by any court or competent authority, such holding shall not affect, impair, or invalidate any other section, clause, provision, portion or phrase of these regulations.

ARTICLE VI: CONFLICTING PROVISIONS

Whenever the regulations made under the authority hereof differ from those prescribed by any state statute, Town ordinance or other regulations, that provision which imposes the higher standard shall govern.

ARTICLE VII: REQUIRED APPROVAL OF SUBDIVISION PLAN

Before any person may subdivide any land within the Town, or construct any street, or install any services, he shall obtain the approval of the final plan from the Board.

ARTICLE VIII: DEFINITIONS

1. **Board**: shall mean the Planning Board of the Town of Bridgewater.

2. **Subdivision**: means the division of a lot, tract or parcel of land into two or more lots, plots, sites or other divisions of land for the purpose, whether immediate or future, of sale, lease, building or condominium development.

   It includes re-subdivision, and when appropriate to the context, relates to the process of subdivisions, or to the land, or to the territory to be subdivided. The division of a parcel of land held in common and subsequently divided into parts among the several owners shall be deemed a subdivision.

3. **Street**: means and includes street, avenue, boulevard, road, alley, highway or other way exclusive of driveway serving not more than two adjacent lots. A discontinued street shall not constitute an existing approved street.

4. **Sketched layout**: means pencil line plan of the proposed subdivision.

5. **Preliminary layout**: means a detailed layout of the proposed subdivision and supporting information required by the Board.

6. **Final plat**: shall mean the final plan on which the subdivider's plan of subdivision is presented to the Bridgewater Planning Board for approval and which if approved shall be submitted to the Registry of Deeds of Grafton County for recording.

7. **Abutter**: means any person whose property is located in New Hampshire and adjoins or is directly across the street or stream from the land under consideration by the local land use board. For purposes of receiving testimony only, and not for purposes of notification, the term "abutter" shall include any person who is able to demonstrate that his land will be directly affected by the proposal under consideration. For purposes of receipt of notification by a municipality of a local land use board hearing, in the case of an abutting property being under a condominium or other collective form of ownership, the term abutter means the officers of the collective or association, as defined in

RSA 356–B:3, XXIII. (In the Town of Bridgewater land on the opposite side of the Pemigewasset River should be included as an abutter.)

8. **Lot**: an area of land in one ownership with definite boundaries ascertainable or to be ascertainable on record and used or set aside and available for use as the site of one or more buildings and building accessory thereto.

9. **Performance guarantee**: before approval of a subdivision by the Planning Board there must be filed with the Board of Selectmen, by the subdivider, an insurance performance bond, suitable escrow deposit or first lien on property within the subdivision by the subdivider or other real property in amount sufficient to cover the cost of construction of the streets, and extension of public water and sewer lines if required. Estimates of cost shall be filed with the street plans and may be reviewed by the Board of Selectmen, their consulting engineer or Road Agent as to amount. Any bond must be approved as to form and sureties by the legal counsel of the Town of Bridgewater and conditioned on the completion of such improvements within five years of the date of the bond.

   As a substitute for the performance bond, money for the full amount of the construction cost may be deposited in escrow in a savings account entitled as such and held by the Town in the Town's name. As an alternative to both of the above, the owner may build the road for its full length in accordance with these standards to be accepted by the Selectmen before the subdivision plan is released for recording by the Planning Board, or any lots are sold.

10. **Engineer**: means the duly designated engineer of the Town of Bridgewater or if there is no such official the Planning Board consultant or official assigned by the Bridgewater Board of Selectmen.

ARTICLE IX: PROCEDURE—PRE-APPLICATION

1. Previous to the formal submission of a subdivision preliminary layout, a subdivider, in order to save himself the cost of needless changes at a later date, must appear at a regular meeting of the Board and submit a sketch plan for discussion with the Board.

2. Application – Formal application shall be made to the Board on a prescribed form (see section XIX –Subdivision Application Checklist). Fees shall be as follows:

(1)	Fee for subdivision of a parcel of land into less than four (4) lots	$80.00
(2)	Fee for subdivision of a parcel of land into less than ten (10) lots and non-commercial	$110.00
(3)	Fee for subdivision of a parcel of land into ten (10) or more lots and all commercial subdivision	$300.00
(4)	In addition, upon approval of the subdivision, the applicant is required to pay to the Town the Filing Fee for recording of the deed	$100.00

The application shall be filed with the Secretary of the Board not less than fifteen (15) days before the regular meeting of the Board, at which time the application is to be considered. Applicants are responsible for complete abutter lists and all mailing fees.

ARTICLE X: PRELIMINARY LAYOUT

The preliminary layout consists of all working information necessary for the Board to grant tentative approval on the proposed subdivision. Submission of the preliminary layout shall include the following:

1. Subdividers shall file with the Board four (4) paper print copies of the proposed subdivision at a scale of not greater than 100 feet to the inch, containing the following information:

    a. Location and dimensions of property lines.

    b. Location, names and width of all existing streets, buildings, easements, water courses, standing water, rock ledge and other essential site features.

    c. A general location map at a scale equal to the Townwide base map showing the proposed subdivision in relation to surrounding property.

    d. Existing topography at not greater than twenty (20) foot intervals, although ten (10) foot intervals may be required, if, in the opinion of the Board, greater accuracy is necessary.

    e. Location, name and width of all proposed streets. Where the preliminary layout as submitted covers only a part of the proposed subdivision, a plan of future lots and the street system will be indicated.

    f. Proposed system of water supply and sewerage disposal.

    g. Proposed subdivision name.

    h. Proposed subdivision use.

    i. Name of subdivider.

    j. Names of all abutters.

    k. Date, north arrow, and bar scale.

2. Subdividers shall present detailed description of all proposed streets. When average grades of proposed roadways exceed 9% and/or 120 cars per day, the Board of Selectmen may require the applicant to include a profile of the entire length of the proposed roadway together with drainage layouts and underground utilities. The profile and drainage layout to be on a separate plat and designed by a licensed designer in the State of New Hampshire. Refer to Guidelines for the Construction and Design of Roads in Excess of 120 Vehicles per Day and/or 9% Grades - Town of Bridgewater which is shown as Appendix A to this Regulation.

3. Subdividers shall present written approval for subdivision from the New Hampshire Water Supply and Pollution Control Division, and, as required under the circumstances by the Planning Board, from the Special Board for Dredge and Fill, Department of Public Works and Highways, and Department of Health and Welfare. The Board may give the preliminary layout its Tentative Approval with or without modifications within forty-five (45) days of its submittal to the Board. Such approval does not constitute final approval of a subdivision, but does facilitate the procedure in

securing final plat approval. The preliminary layout shall become void one (1) year after tentative approval, unless, in the opinion of the Board, substantial progress has been made.

ARTICLE XI: THE FINAL PLAT

1. The final plat submitted for approval and subsequent recording shall be submitted in quintuplicate (5) sets, one of which shall be in Mylar. The size of the sheets shall conform to the requirements of the Registry of Deeds, of Grafton County, for filing. A margin of at least one-inch (1") shall be provided outside ruled border lines on three (3) sides and of at least two inches (2") along the left side for binding. Adequate space shall be available on the map for necessary endorsement by the proper authorities. The drawings shall be at a scale of not more than 100 feet to the inch.

    a. No final plat shall be approved or disapproved by the Planning board without affording a hearing thereon as prescribed by RSA 676:4.

    b. Notice shall be sent to all abutters by certified mail, by the applicant, stating the time and the place of the hearing, not less than ten (10) days before the day fixed thereof.

2. The final plat shall show:

    a. Proposed subdivision names or identifying title, the name and address of owner of record and subdivider, and the name, license number and seal of the designer, date, scale and north point.

    b. Street lines, building lines, pedestrian ways, lot lines, reservations, easements and areas the title to which is reserved by the developer.

    c. Sufficient data acceptable to the Planning Board and/or Board of Selectmen to determine readily the location, bearing and length of every street line, lot line, boundary line to reproduce such lines upon the ground. All dimensions shall be shown to hundredths of a foot and bearings to at least half minutes. The error of course not to exceed 1 to 10,000. The final plat shall show the boundaries of the property and adjoining owners.

    d. Permanent monuments shall be set as required by the Selectmen or designate.

    e. Street names shall be chosen so as not to duplicate any other street or way in the Town of Bridgewater.

    f. Names of all abutters.

ARTICLE XII: STREET SYSTEM

Construction of streets, drainage facilities, sidewalks and curbs must be done under the supervision or with the approval of the Board of Selectmen or Consulting Engineer for the Town of Bridgewater.

1. Provision shall be made for the proper **projection of streets**, if adjoining property is not subdivided.

2. No **street right-of-way** shall be less than fifty feet (50') in width and may be required to be more if a greater width is warranted in the opinion of the Board of Selectmen. The apportioning of the width

among road ways, sidewalks and possible grass strips shall be subject to approval of the Board of Selectmen. In general, a traveled width of not less than twenty feet (20') plus four feet (4') of gravel shoulder on each side shall be required. Roads in excess of 120 vehicles per day or 9% grade may require more stringent criteria and shall be considered individually by the Selectmen and their appointed designate. (To determine traffic, use 6 vehicle trips per day per dwelling unit for the projected traffic.) Refer to Guidelines for the Construction and Design of Roads in Excess of 120 Vehicles per Day and/or 9% Grades - Town of Bridgewater which is shown as Appendix A to this Regulation.

3. All **curved streets** must be designed to permit safe vehicular travel. The minimum center line radius of curved streets up to 7% grade is 115" centerline of the road radius; 7.1% to 8% grade, 200' centerline radius; 8.1% to 9% grade, 250' centerline radius; greater than 9%, 300' centerline radius; although at the Board's request greater radii may be required for principal streets.

4. **Streets** shall be laid out so as to intersect as nearly as possible at right angles. No street shall intersect any other street at an angle of less than sixty (60) degrees. Property lines at street intersections shall be rounded to provide for a property line radius of not less than twenty feet (20').

5. **Grades** of all streets shall conform in general to the terrain and shall so far as practicable, not exceed twelve percent (12%), unless this requirement is specifically waived by the Board of Selectmen. No street shall have a center line grade of less than 0.5%.

6. General **crown** of the road shall be not less than three inches (3"). Shoulder slopes shall be not less than two horizontals for one vertical. The elements of the typical cross section shall conform to the New Hampshire Public Works and Highways guidelines for TRA Projects which shall be considered minimum standards. Construction material specifications shall be those shown in the Standard Specification for Road and Bridge Construction by the State of New Hampshire.

7. **Culverts** must be concrete and shall be fifteen (15) inches in diameter or more and must conform to TRA standards. Contributing draining for all ditches and culverts shall be identified and appropriate flow rates be determined using the "Rational Formula", the S.C.C. TR-55 method or other acceptable method. Both permanent and temporary erosion control shall be provided in roadside ditches and at drainage structure outlets. Generally, no paved ditches will be allowed.

8. Subdivision on **Class 6 roads** will not be permitted until the following conditions have been met:

    a. Class 6 roads must be upgraded to meet TRA Class 5 specifications, according to the Town's existing regulations and ordinances. The complete section of a Class 6 road which serves as access to a subdivision shall be included. All costs to be the responsibility of the developer.

    b. The Planning Board may approve a subdivision prior to completion of (a) above if a sufficient Performance Bond is provided for completion.

    c. No building permit will be issued for construction on a Class 6 road until the owner acknowledges in writing to the Selectmen that he is aware the Town has no responsibility to maintain said road.

8-A. All roads to be built to **Town Specifications**. See Appendix A and B. The twenty foot (20') paved section shall be hard surfaced with two and one-half inches (2½") compressed course of bituminous concrete using three quarters of an inch (3/4") asphalt binder over the required gravel base. Mix and paving to be approved by the Town Road Agent.

9. The entire **traveled area**, twenty-eight feet (28') in width, of each street shall be cleared of all stumps, brush, roots and like material, and all trees not intended for preservation. All loam and other yielding material shall be removed from the roadway and replaced with a suitable material. All boulders shall be broken off to a depth of not less than twelve inches (12") below the subgrade. All streets shall have a base course of not less than twelve inches (12") of good bank run gravel, with stone no larger than six inches (6") in diameter, to a width of no less than twenty-eight feet (28'). The top two inches (2") of traveled area to be top dressed with one and one-half inches (1½") crushed gravel. Gravel to be crushed using a two-way screen.

10. **Dead end** streets shall be equipped with a turn-around roadway at the closed end with a minimum radius of fifty feet (50') from the center. See Appendix B. When conditions peculiar to a particular intended subdivision so dictate, the Selectmen may, in its discretion, authorize a traveled width of less than twenty feet (20').

11. **Inspections**: There shall be a minimum of three inspections by the Selectmen or their appointed designate. The initial inspection shall take place upon the submission of the proposed road plans. The Selectmen or designate shall notify the owner of the date of inspection and it shall be the responsibility of the owner to see that the road is laid out and described sufficiently on the ground.

    Inspection shall take place periodically during construction. It shall be the responsibility of the owner to notify the Selectmen or designate at least forty-eight (48) hours in advance of any covering of laid pipes, placing of gravel and grading, and paving operations.

    The final inspection shall take place after the presentation of as built plans" and before final acceptance of the road by the Selectmen.

    If at any time during construction the Selectmen feel that it is necessary to have more extensive inspection or engineering than they are capable of providing, the cost of such inspection shall be paid by the Town and reimbursed in full by the owner.

12. **As Built or Record Plan**: Before the final inspection and acceptance of the road by the Selectmen the owner shall have prepared a final "As Built or Record Plan." This plan should show as built locations and elevations in a contrasting color (preferably red ink) on a print of the original subdivision or road design. It should show the following: as built centerline of street elevations, as built culvert locations, manhole locations, guard rail locations and underground utilities.

    In addition to the as built plan a metes and bounds legal description shall be furnished by the owner (prepared by the surveyor, licensed in New Hampshire) of that portion of the road to be deeded to the Town. Accompanying the legal description shall be a certification by the owner's surveyor that the right-of-way bounds have been set at the locations shown on the plans.

13. With the approval of the Board of Selectmen or Consulting Engineer, permit variations in details of construction specified in the above article may be granted.

14. All of the foregoing shall have the intent of creating Class V highways by State standard.

15. All driveways shall conform to the driveways specifications as published by the Selectmen or their designate (See: ***Miscellaneous ordnances relative to the policy for the permitting of driveways and other accesses to Bridgewater Town Roads: Adopted 2007***)

ARTICLE XIII: GENERAL REQUIREMENTS FOR THE SUBDIVISION OF LAND

1. Land of such a character that it cannot be safely used for building purposes because of exceptional danger to health or peril from fire, flood, topography, or other menace, shall not be platted for residential occupancy, or for such other uses as may increase danger to health, life, or property, or aggravate the flood hazard, until appropriate measures have been taken by the subdivider to eliminate such hazards; nor shall such land be left as a remainder to any subdivision. No floodway or water course shall be obstructed.

2. For the development of tracts of land in excess of twenty (20) acres, or involving in excess of ten (10) individual lots whether planned or completed at one time or in stages, not less than five percent (5%) of the area may be required to be reserved for suitable recreational or other non-residential use or purpose as may be determined by the Board. The prescribed five percent (5%) noted above shall be designated in the original plan prior to subdivision.

3. In subdivisions not served by public or approved community **sewer** systems, it shall be the responsibility of the subdivider to provide proof of subdivision approval by the New Hampshire Water Supply and Pollution Control Division.

4. The Board of Selectmen or its designate reserves the right to inspect any or all water and sewerage systems either during construction and/or prior to operational approval.

5. All lots shall conform to the lot sizes and frontage requirements of the Bridgewater Zoning Ordinance.

6. Subdivider shall give drainage releases to the Town of Bridgewater for the right to drain across certain specified lots.

7. Any landowner, desiring to excavate gravel or loam for commercial purposes, must have prior approval of the Bridgewater Planning Board. Compliance with RSA 155-E:2 is required.

8. **Fire Protection**: The purpose of this standard is to specify minimum requirements for water supply for fire that will provide a reasonable degree of protection to life and property in the area. The following standards shall be observed for all developments of seven (7) or more lots or principal buildings (dwellings):

    a. Water supply shall be by cistern, dry hydrant or pressurized hydrant. The cistern, dry hydrant or pressurized hydrant system shall have a minimum static capacity of thirty thousand (30,000) gallons of water on a year-round basis, with no dwelling unit in the subdivision over fifteen hundred feet (1500') distant.

    b. A cistern system shall be designed by a registered professional engineer. All plans shall be signed by same.

    c. The design of any of the above systems shall be submitted to the Planning Board and the Bridgewater Fire Chief before subdivision approval. Approval by the Fire Chief is mandatory.

d. Any cistern or pressurized hydrant shall comply with National Fire Standard 1231 and Fire Department Regulations on file in the Town Office. Specifications may be adjusted, if necessary, from Standard 1231 for the temperate zone of the town. Any dry hydrant system shall comply with specification on file in the Town office.

e. When questions develop not covered by this standard, NFPA Standard 1231 will be used to determine the occupancy hazard and the fire protection required.

f. The developer shall reserve sufficient land, minimum one-half (1/2) acre, not deductible from subdivision acreage considerations, from the development to provide siting for a water supply as identified in (a) above. This land shall be deeded to the Town as a condition of subdivision approval, along with access from the nearest traveled way or Town road. Maintenance responsibility (of said supply) will then reside with the Town.

ARTICLE XIV: PENALTIES AND ENFORCEMENT; REVIEW PROCEDURE

1. **Penalties** and enforcement: These regulations shall be enforced pursuant to RSA 676:16 and any amendments thereto.

2. **Review Procedures**: The Planning Board shall place on its agenda for consideration any plats submitted to it within thirty days and shall act to approve or disapprove thereof within ninety (90) days. It shall be the duty of the Town Clerk to issue all certificates of failure when the Planning Board shall fail to take action as provided in Chapter 36, sections 19 through 29, and section 34, RSA 1955.

ARTICLE XV: VARIANCES

Where strict conformity with these regulations would cause undue hardship or injustice to the subdivider because of topography or other inherent limitation of the property, etc., a subdivision plan, substantially in conformity with these regulations may be approved by the Board, provided that the spirit of these regulations and public convenience and welfare will not be adversely affected.

ARTICLE XVI: AMENDMENTS

These regulations may be amended in whole or in part, or rescinded by the Board, but only following a public hearing on the proposed change. The Chairman or Secretary of the Board shall transmit a record of any changes so authorized to the Grafton County Register of Deeds (RSA 675:6).

ARTICLE XVII: APPEAL

Appeal of the Board's decision may be made pursuant with New Hampshire RSA 677:15.

ARTICLE XVIII: INTERPRETATION

In matter of judgment or interpretation of the above requirements, the opinion of the Board shall prevail.

ARTICLE XIX: SUBDIVISION APPLICATION CHECKLIST

Applications for subdivision and boundary line adjustments that will create a buildable lot shall be made on the form provided by the Planning Board titled Subdivision Application Checklist for Subdivision and Boundary Line Adjustments, a copy of which follows.

Minor lot line adjustments or boundary agreements which do not create buildable lots will require notice be given to abutters, and any abutter may be heard on the application upon request prior to approval of the lot line adjustment in accordance with RSA 676:4(e)(1).

TOWN OF BRIDGEWATER

SUBDIVISION APPLICATION CHECKLIST

FOR SUBDIVISIONS AND BOUNDARY LINE ADJUSTMENTS

(that create a buildable lot)

April 2005

The completed application must be filed in the Selectmen's Office not less than fifteen (15) days before the regular meeting of the Board.

Applications are responsible for the complete abutters list and all mailing fees.

Abutters must receive the standard notice stating the time and place of the hearing by certified mail not less than ten (10) days before the hearing.

Certified mail receipts and a copy of the notice sent must be delivered to the Planning Board.

Instructions for notifying abutters for Sub-Division and/or Site Plan Applications.

1. Obtain list of *all* abutters using town tax maps and latest printouts for current addresses.
2. Prepare a letter for each abutter as described in the appropriate section of the Zoning Regulations.
3. Address an envelope for each abutter using the address obtained above.
4. Prepare a Certified Main Receipt and a Domestic Return Receipt for each envelope above.

5. The Sender or Return address should be:

   Bridgewater Planning Board
   297 Mayhew Turnpike
   Bridgewater, NH 03222

   Map_____ Lot_____

6. Deliver the letters in the properly addressed envelopes, with the Certified Mail Receipts and the Domestic Return Receipts properly attached, to the Town office along with a check made payable to the "USPS" for an amount equal to the numbers of letters. See Appendix 8 .

7. These letters and checks must be at the Town office **no later than the Thursday**, which is 18 days before the Planning Board meeting date. (Since the Planning Board meets on the third Tuesday of the month, this means the Thursday in the third week prior to the meeting).

   This is necessary to ensure that the mailing meets the State requirements for notification
   IF THESE DATES ARE NOT MET, THEN YOUR APPEARANCE BEFORE THE PLANNING BOARD WILL BE DELAYED BY AT LEAST 1 MONTH BECAUSE PROPER NOTIFICATION CANNOT BE ACCOMPLISHED.

Before submission of a formal application to the Planning Board the applicant must make a preliminary consultation with the Planning Board to discuss the proposed project in conceptual terms. Please see Page 2 for instructions on the requirements of a Preliminary Consultation.

To be considered complete subdivision application shall contain the following information, where applicable. The information requested is intended to be a guide to the applicant. The Planning Board may require additional information as deemed necessary for the project. All plans shall conform to the applicable requirements of the Zoning Ordinance, Building Regulations, Subdivision and Site Plan Review Regulations and other state, local, and federal requirements.

A COMPLETED APPLICATION FOR SUBDIVISION MUST CONTAIN THE FOLLOWING ITEMS:

1.	Application checklist (pages 3 to 5 attached)		☐
2.	Names and addresses of all abutters (page 6 attached)		☐
3.	Four (4) copies of Subdivision Plan and one (1) mylar, scale not greater than 100 feet to the inch		☐
4.	Planning Board Fees:		
	a. Subdivision fee of land into less than four (4) lots or for a boundary line adjustment	$80.00	☐
	b. Subdivision fee of land into four (4) to nine (9) lots	$110.00	☐
	c. Subdivision fee for ten (10) or more lots and all commercial lots	$300.00	☐
5.	Filing Fee for Recording of Deed (required upon approval of subdivision	$100.00	☐

NOTE: ALL CHECKS ARE PAYABLE TO THE TOWN OF BRIDGEWATER

PRE-APPLICATION REVIEW (REQUIRED)

There are two methods of pre-application review available to the property owner or agent. Both approaches shall not bind either the applicant or the Board and statements made by the Planning Board members shall not be the basis for disqualifying said members or invalidating any action taken. No decisions are reached and no vote is taken. Pre-application review is covered under RSA 676:4.

(a) PRELIMINARY CONSULTATION PROCEDURE FOR SUBDIVISION

A Preliminary Consultation provides an opportunity for the property owner or agent to discuss with the Board, in very general terms, the uses that may be suitable for a piece of property. A Preliminary Consultation helps to identify potential problems early in the process thereby saving time and/or unnecessary and expensive redesign at a later date. The Preliminary Consultation is an informal meeting and must take place at a public meeting of the Planning Board, but notification of abutters and the general public is not required. Because the discussion is informal, no plans or specific details are presented.

In preparation for a preliminary consultation prepare a sketch of the area drawn from the tax map and identify the approximate dimensions and sizes of the proposed lots, layout of proposed streets, and any facilities or utilities. Be prepared to discuss the existing conditions on the site.

(b) DESIGN REVIEW PROCEDURE

The Design Review phase provides the property owner or agent the opportunity to engage in non-binding discussions with the board beyond conceptual and general discussion which involve more specific design and engineering details. This phase of pre-application review requires ten (10) day notice to abutters and the general public and must take place at a public meeting of the planning board.

To request either a preliminary consultation or a design review, notify the Planning Board Chairman of the date of the public hearing you would like to attend. A time will be given for the preapplication review based upon the scheduling for that night.

TOWN OF BRIDGEWATER
APPLICATION CHECKLIST

1. Date: _____

2. Name of Legal Owner: _____
   Address: _____
   _____ Telephone # _____

3. Name of Applicant: _____
   Address: _____
   _____ Telephone #: _____
   Relationship to owner: _____

4. Property Address: _____
   Tax Map: _____ Lot #: _____ *Zoning District: _____
   Area of Entire Tract: _____ Portion being Developed: _____

5. Proposed Subdivision Use: _____
   _____
   _____
   _____
   _____

6. Name and license number of surveyor or engineer: _____
   _____
   _____

7. Do any deed restrictions and covenants apply? Yes No (Circle one)
   Are any contemplated? Yes No (Circle one)
   If yes, attach copy. _____

8. Administrative fees for this application payable to the Town of Bridgewater.
   $_____

*A COPY OF THE TOWN OF BRIDGEWATER ZONING MAP IS ATTACHED FOR YOUR REFERENCE.

Please indicate that the following information is contained on the plans submitted. Enter N/A in the submitted column if the item does not apply. If you are requesting a waiver of an item, please attach a written request for waiver. See Waiver Procedures attached.

		Submitted	Waiver Requested
9.	Name of Subdivision	_____	_____
10.	Location and dimensions of property lines	_____	_____
11.	Date, North arrow, and bar scale	_____	_____
12.	Location, name(s), and width of all existing roads, rights-of-way, easements, water courses, standing water, rock ledge and other essential site features	_____	_____
13.	Location, name(s), and width of all proposed roads, rights-of-way, and easements	_____	_____
14.	Locations, dimensions and areas of all proposed lots	_____	_____
15.	Identification of pedestrian ways, reservations, and areas the title to which is reserved by the developer	_____	_____
16.	Proposed system of water supply	_____	_____
17.	Proposed system of sewerage disposal	_____	_____
18.	General location map at a scale equal to the Town wide base map showing the proposed subdivision in relation to surrounding property	_____	_____
19.	Existing topography at not greater than twenty-foot (20') intervals, although ten-foot (10') intervals may be required, if, in the opinion of the Board, greater accuracy is necessary	_____	_____
20.	Written approval for subdivision from the NH Water Supply and Pollution Control Commission	_____	_____
21.	Other permits may be applicable:	_____	_____
	Department of Public Works and Highways	_____	_____
	Department of Health and Welfare	_____	_____
	New Hampshire Wetlands Board, and/or Special Board for Dredge and Fill	_____	_____
22.	Waiver	_____	_____

NOTE: FOR THE CONSTRUCTION OF A ROAD, A PERFORMANCE GUARANTEE, FILED WITH THE SELECTMEN, IN THE FORM OF AN INSURANCE BOND, ESCROW DEPOSIT, OR EVIDENCE OF COMPLETED WORK ON THE ROAD MAY BE A NECESSARY CONDITION TO THE FINAL APPROVAL OF A SUBDIVISION.

NOTICE: I CERTIFY THAT THIS APPLICATION AND THE ACCOMPANYING PLANS AND SUPPORTING INFORMATION HAVE BEEN PREPARED IN CONFORMANCE WITH ALL APPLICABLE TOWN REGULATIONS, INCLUDING BUT NOT LIMITED TO THE "SUBDIVISION REGULATIONS" AND THE ZONING ORDINANCE.

DATE: _____ APPLICANT SIGNATURE: _____

TOWN OF BRIDGEWATER

ABUTTER LIST

PLEASE LIST ALL PERSONS WHOSE PROPERTY ADJOINS OR IS DIRECTLY ACROSS THE STREET OR STREAM FROM THE LAND UNDER CONSIDERATION BY THE BOARD. THIS LIST SHALL BE COMPILED FROM THE TOWN OF BRIDGEWATER'S TAX ASSESSOR'S RECORDS.

Tax Map #: _____
Name: _____
Address: _____
_____

Tax Map #: _____
Name: _____
Address: _____
_____

Tax Map #: _____
Name: _____
Address: _____
_____

Tax Map #: _____
Name: _____
Address: _____
_____

Tax Map #: _____
Name: _____
Address: _____
_____

Tax Map #: _____
Name: _____
Address: _____
_____

Tax Map #: _____
Name: _____
Address: _____
_____

Tax Map #: _____
Name: _____
Address: _____
_____

Tax Map #: _____
Name: _____
Address: _____
_____

Tax Map #: _____
Name: _____
Address: _____
_____

NOTE: PLEASE ATTACH ADDITIONAL SHEETS, IF NEEDED.

TOWN OF BRIDGEWATER

WAIVER PROCEDURES

The Planning Board may waive or modify specific requirements of the regulations under the following circumstances:

a. Strict conformity with any specific requirements would cause undue hardship or injustice to the landowner.

b. The review procedures have been in general conformity with the regulations.

c. The general spirit, intent, and purpose of the regulations will not be adversely or substantially affected or harmed.

d. The public convenience and welfare of the citizens of Bridgewater will not be adversely or substantially affected or harmed.

In approving waivers, the Planning Board may require such conditions as will, in its judgment, secure substantially the objectives of the standards or requirements of these regulations.

A petition for any waiver shall be submitted in writing by the applicant at the time the application is filed for consideration of the Planning Board. The petition shall state fully the grounds for the waiver and all of the facts relied upon by the petitioner.

NOTE: According to RSA 676:4.I I, the Planning Board must act either to approve, approve conditionally, or deny an application within ninety (90) days of its submission unless this requirement is waived by the Applicant.

The Planning Board will do all within its power to comply with this statute, however should unusual circumstances require an extension of time we may request your authorization to seek a 90-day extension from the Selectmen.

TOWN OF BRIDGEWATER

297 MAYHEW TURNPIKE
BRIDGEWATER, NH 03222

ABUTTER'S NOTICE

Date: _____/_____/_____

To: _____

_____

_____

Dear _____:

The Planning Board for the Town of Bridgewater, NH will be holding an abutter's hearing on Tuesday, _____/_____/_____ at _____:_____ PM, at the Bridgewater Town Hall located on 297 Mayhew Turnpike (RT. 3A), Bridgewater, NH.

Applicant: _____

Location of Property: _____

Tax Map: _____ Lot #: _____

Purpose of Hearing: _____

_____

As an abutter, you are invited to attend the meeting in person or by counsel or agent and state reasons why the above application should or should not be granted. If you have any questions, please contact the Planning Board at (603)744-5055.

TOWN OF BRIDGEWATER, NEW HAMPSHIRE

LAND SUBDIVISION REGULATIONS

APPENDIX A

GUIDELINES FOR DESIGN AND CONSTRUCTION OF ROADS

IN EXCESS OF 120 VEHICLES PER DAY AND/OR 9% GRADES

Adopted by the Board of Selectmen

August 18, 1988

Town of Bridgewater, New Hampshire

Amended June 17, 1997

April 2007

APPENDIX A

GUIDELINES FOR DESIGN AND CONSTRUCTION OF ROADS IN EXCESS OF 120 VEHICLES PER DAY AND/OR 9% GRADES

PART I: DESIGN

DESIGN TRAFFIC VOLUME

Roads shall be designed for specific traffic volumes in accordance with accepted engineering practice.

To determine the design traffic volume, use six (6) vehicle trips per day per dwelling unit for the projected number of units.

Roads which have an average daily traffic (ADT) volume in excess of 120 vehicles per day may require more stringent criteria and shall be considered individually by the Selectmen and their appointed engineer.

RIGHT OF WAY

No right-of-way shall be less than fifty feet (50') in width. When construction excavation of fill extends beyond the right-of-way limits an easement for maintenance of slopes shall be granted by the abutting land owner. To determine the design traffic volume, use six (6) vehicle trips per day per household for the projected number of households in the design year.

DESIGN SPEED

Design speed shall be selected for the appropriate type of terrain and ADT as shown below.

Table 1

Design Speed (MPH)

TYPE OF TERRAIN	ADT = 0–50	ADT = 50–250	ADT = 250–400
Level	40 MPH	40 MPH	50 MPH
Rolling	30 MPH	30 MPH	40 MPH
Mountainous	20 MPH	20 MPH	30 MPH

Level terrain is that which is generally flat and sight distance is generally long or could be made so without construction difficulty or major expense. (See Appendix on driveways adopted May 10, 2007.)

Rolling terrain is that where the natural slope of the ground consistently rises and falls and where occasional steep slopes offer some restriction to normal alignment and sight distance.

Mountainous terrain is that where changes in elevation are abrupt and where the road bed is obtained by frequent benching and sidehill excavation.

SIGHT DISTANCE

Minimum stopping and passing sight distance shall be as shown in Table 2 below. Criteria for measuring vertical and horizontal sight distance are as follows:

Stopping sight distance (SSD) – height of driver's eye 3.75 feet and height of object 0.5 feet

Passing sight distance (PSD) – height of driver's eye 3.75 feet and height of object 4.5 feet

Table 2

Design Speed – MPH	20 MPH	30 MPH	40 MPH	50 MPH
Stopping Sight Distance	150 feet	200 feet	275 feet	350 feet
Passing Sight Distance		1,100 feet	1,500 feet	1,800 feet

In the design of subdivision roads stopping sight distance will generally govern since passing is generally discouraged in residential areas. Effort should be made to obtain greater than minimum sight distance.

GRADES

Minimum grades shall be not less than 0.5%. Maximum grade shall be as shown in Table 3 below. A maximum grade of 2% will be allowed within fifty feet (50') of an intersection to provide safe and adequate landing area.

Table 3

Type of Terrain	20 MPH	30 MPH	40 MPH	50 MPH
Flat	7%	7%	7%	6%
Rolling	10%	9%	8%	
Mountainous	12%	10%	10%	

ALIGNMENT

Alignment shall be as high a standard as is commensurate with topography, terrain, and design traffic. Sudden changes between curves of widely different radii or long tangents and sharp curves should be avoided. Where crest vertical curves and horizontal curves occur at the same location there should be greater minimum sight distance to assure that the horizontal curve is visible as the driver's approach.

A maximum rate of superelevation of 0.06 feet/foot (3/4 inches/foot) will be allowed on curves. The minimum radius for different design speeds are to be as shown in Table 4 below.

Table 4

Design Speed MPH	Minimum Radius
20	115
30	275
40	510
50	830

ELEMENTS OF THE TYPICAL CROSS SECTION

The elements of the typical cross section shall conform to the New Hampshire Public Works and Highways guidelines for Town Road Aid Projects which shall be considered minimum standards. Modifications in the typical cross section will be allowed when based on sound engineering design. Any modification must be approved by the Selectmen or their appointed engineer.

DRAINAGE AND EROSION CONTROL

Contributing drainage areas for all ditches and culverts shall be identified and appropriate flow rates shall be determined using either the "Rational Formula, " the S.C.S. TR-55 Method, or other accepted methods.

Culverts, ditches and other drainage structures shall be analyzed for both ten (10) year and twenty-five (25) year return periods with analysis of head water and backwater. Where potential for damage to adjacent property exists, the twenty-five (25) year return period shall govern the design.

Both permanent and temporary erosion control shall be provided in roadside ditches and at drainage structure outlets. Such erosion control shall consist of well-established sod, stones or cobbles. Generally, no paved ditches will be allowed. Where necessary, retention ponds deemed shall be constructed to control runoff.

TRAFFIC CONTROL DEVICES AND SIGNING

Traffic control devices or signs shall be placed at locations where conflicting traffic movements will exist or where large traffic volume indicates necessity. Generally, stop signs will be provided at intersections where the street of lesser traffic volume enters that of higher traffic volume. All signs and control devices shall conform to those standards set forth in the Manual of Uniform Traffic Control Devices.

SUBMISSION OF ROAD DESIGN

Road design shall be drawn with a horizontal scale of 1"–50' and vertical scale of 1"–10' on plan and profile paper measuring 22" X 34" in size. Submit four (4) sets of prints to the Board of Selectmen for review and approval. The plan(s) submitted shall conform to acceptable road design standards as found in Suggested Minimum Standards for Rural Subdivision Roads.

A detailed estimate of construction costs shall be filed with the plans when submitted for approval. At the option of the Board of Selectmen, the plans may be submitted to the consulting engineer and/or Road Agent for review to determine costs.

PART II: CONSTRUCTION

BOND OR ESCROW

Performance guarantee: Before approval of a subdivision by the Planning Board there must be filed with the Board of Selectmen, by the subdivider, an insurance performance bond, suitable escrow deposit or first lien in property within the subdivision by the subdivider, or other real property in amount sufficient to cover the cost of construction of the streets, and extension of public water and sewer lines if required.

Estimates of cost shall be filed with the street plans and may be reviewed by the Board of Selectmen, their consulting engineer or Road Agent as to amount. Any bond must be approved as to form and sureties by the legal counsel for the Town of Bridgewater and conditioned on the completion of such improvements within five years of the date of the bond. As a substitute for the performance bond, money for the full amount of the construction cost may be deposited in escrow in a savings account entitled as such and held by the Town in the Town's name.

As an alternative to both of the above, the owner may build the road for its full length in accordance with these standards to be accepted by the Selectmen before the subdivision plan is released for recording by the Planning board or any lots are sold.

INSPECTIONS

There shall be a minimum of three inspections by the Selectmen or their appointed engineer.

The initial inspection shall take place upon the submission of the proposed road plans. The Selectmen shall notify the owner of the date of inspection and it shall be the responsibility of the owner to see that the road is laid out and described sufficiently on the ground.

Inspection shall take place periodically during construction. It shall be the responsibility of the owner to notify the Selectmen at least forty-eight (48) hours in advance of any covering of laid pipes, placing of gravel and grading, and paving operations. The owner shall furnish sufficient information such as survey field notes or marked up profile to the Selectmen to prove that the gravel base course is at grade before paving begins.

The final inspection shall take place after the presentation of "as built plans" and before final acceptance of the road by the Selectmen.

If at any time during construction the Selectmen feel that it is necessary to have more extensive inspection or engineering than they are capable of providing, the cost of such inspection shall be paid by the Town and reimbursed in full by the owner.

MATERIALS

Construction material specifications shall generally be those shown in Design Standards for Rural Subdivision Roads, approved and adopted in 1974. Special specification or those which differ from the State Standard will be spelled out and stated specifically in the initial submission of the design plans. Approval of materials must be made by the Selectmen or their appointed engineer prior to their use in construction. A letter of certification shall be provided by the owner that all material meets specifications, specifically gravel, pipe, and pavement materials.

LAYOUT

It shall be the responsibility of the owner to provide all layout necessary to assure that construction takes place on the line and grade established during design. This shall be related to but not limited to the following: center line stakes, limit at clearing stakes, rough grade stakes, edge of pavement stakes, fine grade stakes, and drainage structure grade stakes.

AS BUILT OR RECORD PLAN

Before the final inspection and acceptance of the road by the Selectmen the owner shall have prepared a final "As Built or Record Plan." This plan should show as built locations and elevations in a contrasting color (preferably red ink) on a print of the original road design. It should show the following:

- as built centerline of street elevations,
- as built culvert invert elevations,
- as built manhole invert and rim elevations,
- as built guard rail and sign locations.

In addition to the as built plan, a metes and bounds legal description shall be furnished by the owner (prepared by a surveyor, licensed in New Hampshire) of that portion of the road to be deeded to the Town. Accompanying the legal description shall be a certification by the owner's surveyor that the right-of-way bounds have been set at the locations shown on the plans.

TOWN OF BRIDGEWATER, NEW HAMPSHIRE

LAND SUBDIVISION REGULATIONS

APPENDIX B

DIAGRAMS

GUIDELINES FOR DESIGN AND CONSTRUCTION OF ROADS

IN EXCESS OF 120 VEHICLES PER DAY AND/OR 9% GRADES

Adopted by the Board of Selectmen

August 18, 1988

Town of Bridgewater, New Hampshire

Amended June 17, 1997

September 1990

NEW HAMPSHIRE DEPARTMENT OF TRANSPORTATION
MINIMUM GEOMETRIC & STRUCTURAL GUIDES FOR LOCAL ROADS AND STREETS

Average Daily Traffic (Veh./Day)	0-50	50-200	200-750	750-1500	1500 & OVER
Pavement Width (Feet)	18 min.	20	20	22	24
Shoulder Width (Feet)	2	2	4	4	8-10
Center of Road to Ditch Line	15	16	18	19-21	Varies
Pavement Type	Gravel	Asph. Surf. Treated	Hot Bitum.	Hot Bitum.	Hot Bitum.
Slope of Roadway	4%	3%	2%	2%	2%
Base Course Depth-(Gravel)	12"	12"	12"	12"	18"
(Cr. Gravel)	-	-	4"	6"	6"

Notes 1. Gravel surfaces should be paved where steep grades occur.
2. For average daily traffic over 1000 veh./day paved shoulders should be considered
3. Base course depths may need to be increased in areas of poor soils

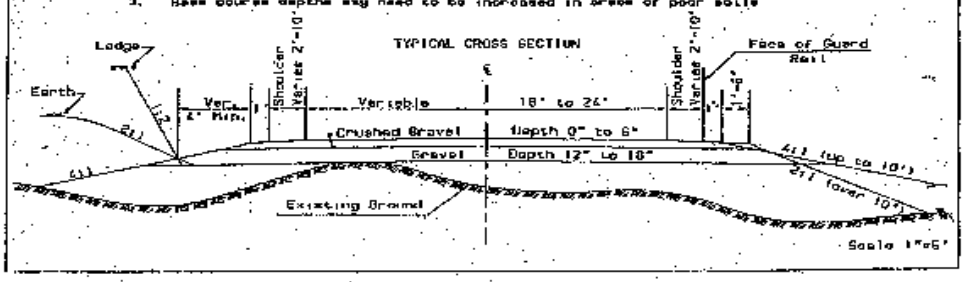

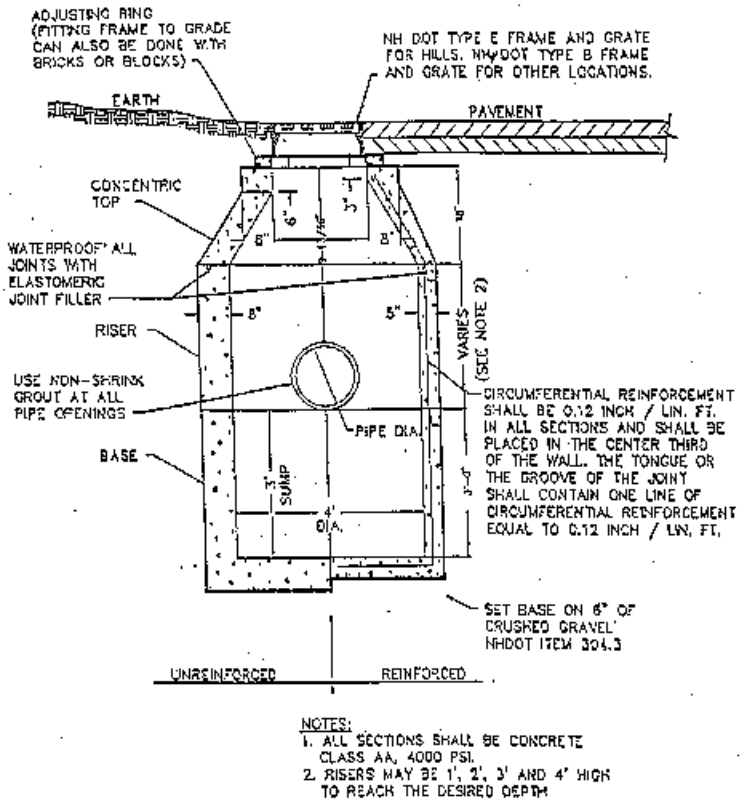

NOTES:
1. ALL SECTIONS SHALL BE CONCRETE CLASS AA, 4000 PSI.
2. RISERS MAY BE 1', 2', 3' AND 4' HIGH TO REACH THE DESIRED DEPTH

PRECAST CATCH BASIN DETAIL

SCALE: NOT TO SCALE

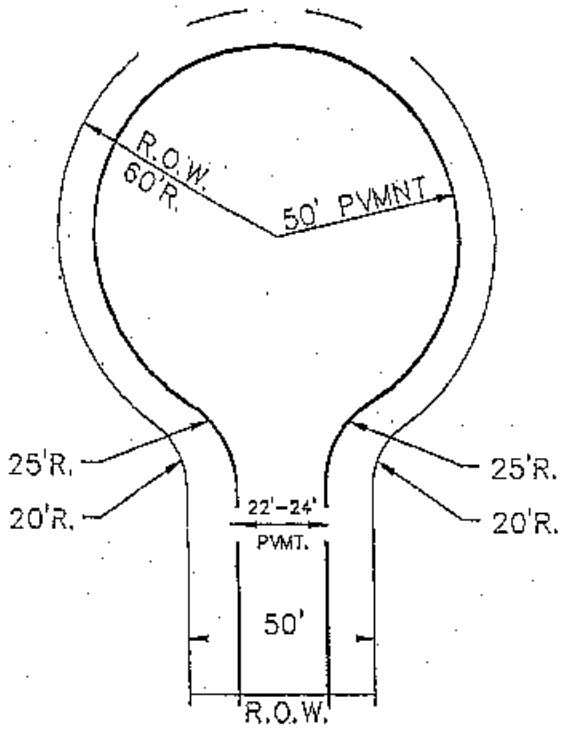

No more than 3% grade allowed on Cul De Sac

CUL-DE-SAC DETAIL

SCALE: NOT TO SCALE

TABLE 3

RECOMMENDED MINIMUM PLACEMENT TEMPERATURES

Base[1] Temp. F	Mat Thickness, in. (cm) 1/2(1)	3/4(2)	1(2.5)	1-1/2(4)	2(5)	3(7.5)[2]
+40-50	---	---	310	300	285	275
+50-60	---	310	300	295	280	270
+60-70	310	300	290	285	275	265
+70-80	300	290	285	280	270	265
+80-90	290	280	275	270	265	260
+90	280	275	270	265	260	255
Rolling Time, min.	4	6	8	12	15	15

[1]Base on which mix is placed [C=0.555 (F-32)]
[2]and greater

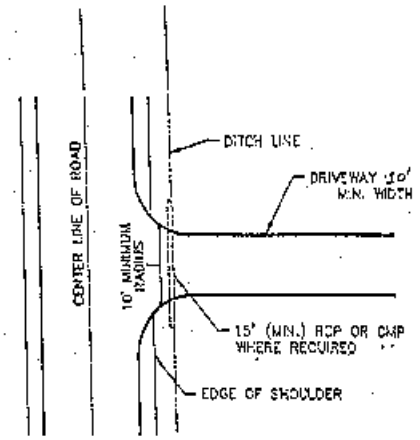

PLAN

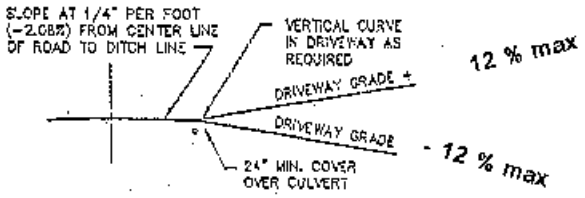

DRIVEWAY PROFILE

TYPICAL DRIVEWAY

N.T.S.

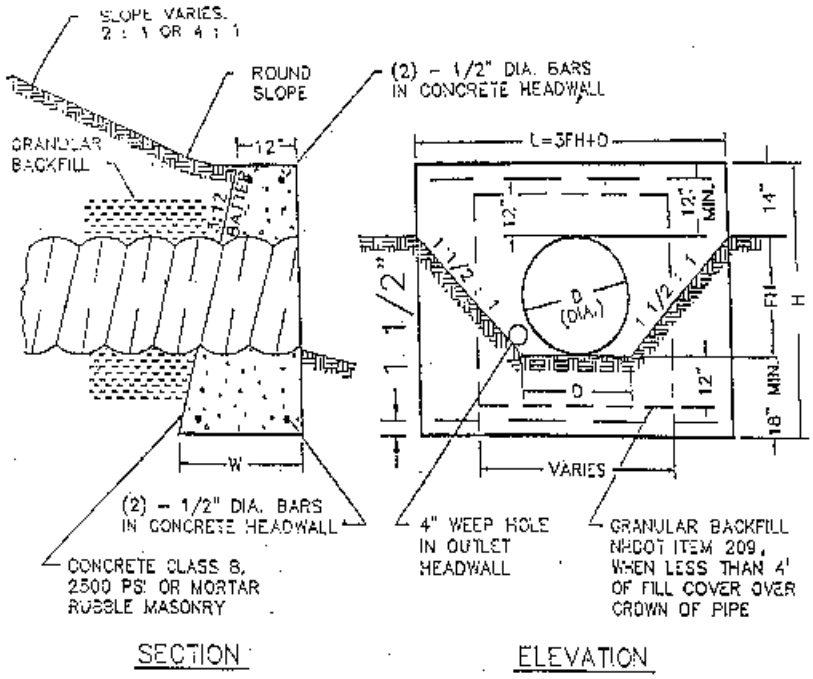

NOTE:
CORRIGATED METAL PIPE IS SHOWN, THIS HEADWALL DETAIL IS ALSO TYPICAL FOR REINFORCED CONCRETE PIPE.

D	L	H	FH	W
12	3'-6"	3'-6"	0'-10"	1'-10 1/2"
15	4'-6"	3'-9"	1'-1"	1'-11 1/4"
18	5'-6"	4'-0"	1'-4"	2'-0"
24	7'-6"	4'-6"	1'-10"	2'-1 1/2"
30	9'-6"	5'-0"	2'-4"	2'-3"
36	11'-6"	5'-6"	2'-10"	2'-4 1/2"

HEADWALL DETAIL

SCALE: NOT TO SCALE

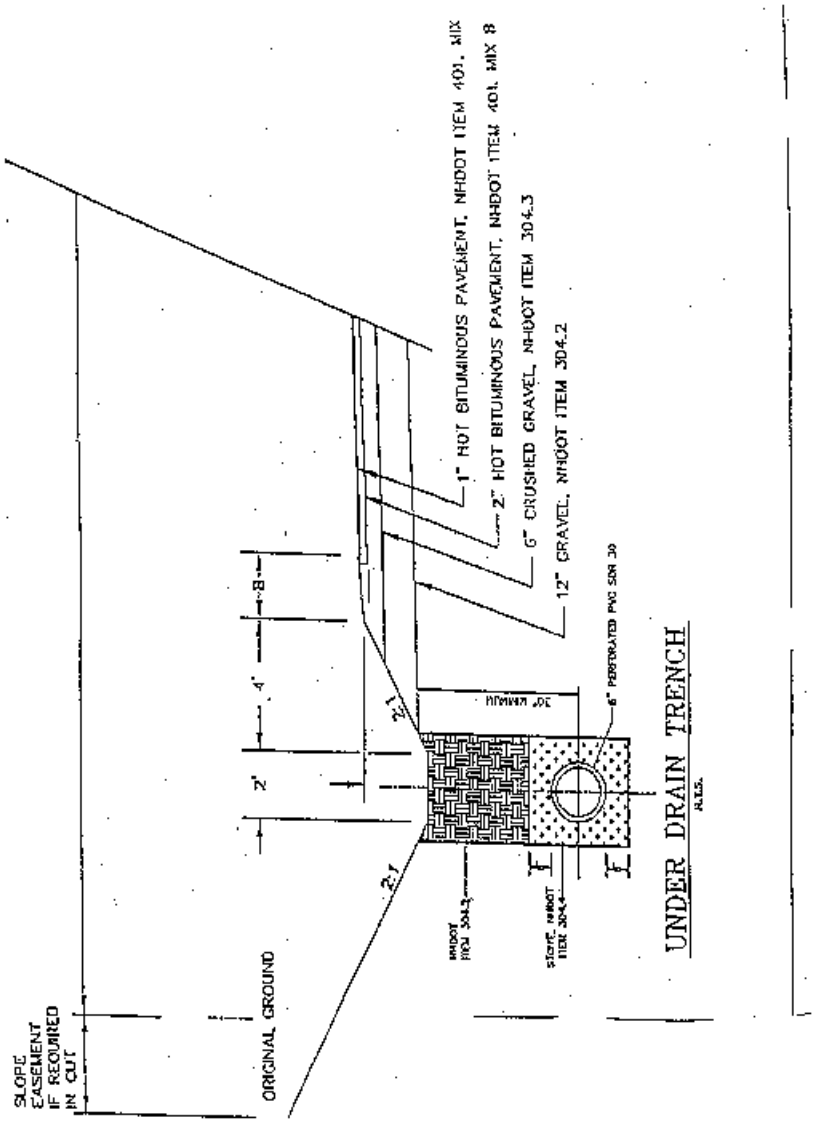
1" HOT BITUMINOUS PAVEMENT, NHDOT ITEM 401, MIX
2" HOT BITUMINOUS PAVEMENT, NHDOT ITEM 401, MIX 8
6" CRUSHED GRAVEL, NHDOT ITEM 304.3
12" GRAVEL, NHDOT ITEM 304.2
6" PERFORATED PVC SDR 30
30" MINIMUM
2:1
2:1
4'
8
2'
NHDOT ITEM 304.2
STOVE, NHDOT ITEM 304.4
UNDER DRAIN TRENCH
SLOPE EASEMENT IF REQUIRED IN CUT
ORIGINAL GROUND

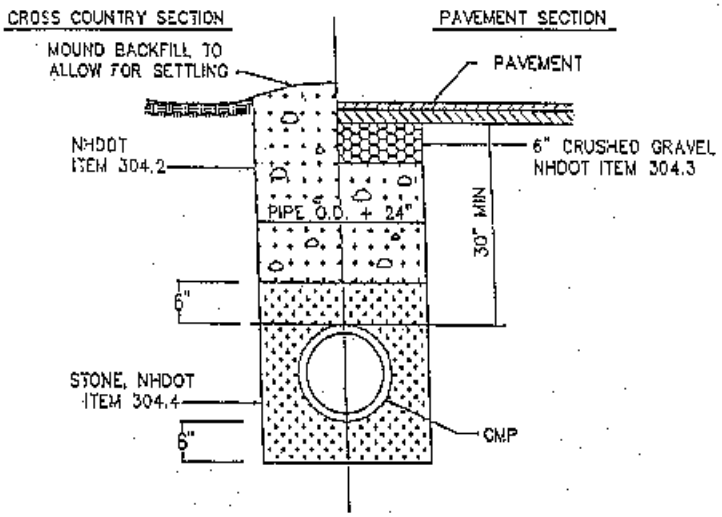

STORM DRAIN TRENCH

NOT TO SCALE

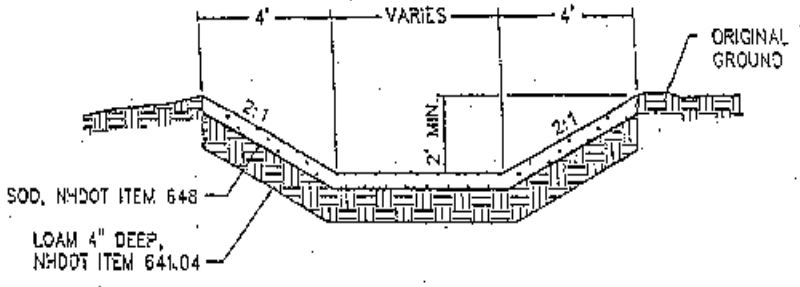

GRASS LINED DITCH

N.T.S.

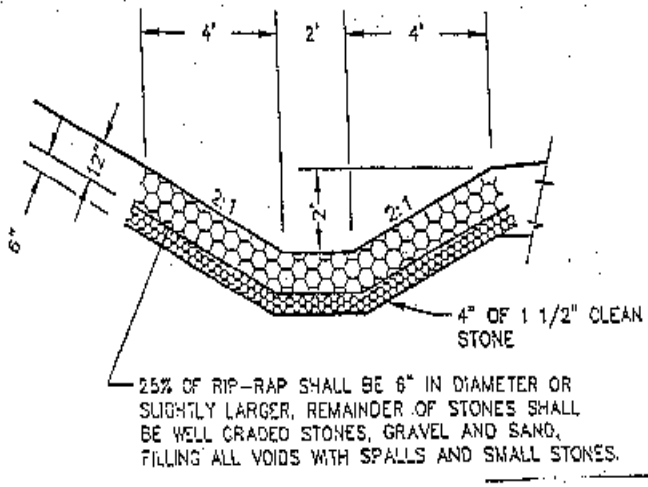

RIP-RAP LINED DITCH

N.T.S.

TOWN OF BRIDGEWATER, NEW HAMPSHIRE

BUILDING REGULATIONS

HISTORY

ADOPTED 13 MARCH 1961

AMENDED 8 MARCH 1988 (AMENDMENTS UNKNOWN)

AMENDED MARCH 9, 1999

AMENDED APRIL 2004

APRIL 2007

TOWN OF BRIDGEWATER, NEW HAMPSHIRE

BUILDING REGULATIONS

ADOPTED 13 MARCH 1961

To promote the health, safety, and general welfare of the Town by regulating the construction of buildings thereon in the Town of Bridgewater, New Hampshire, the following Regulations are hereby enacted by the voters of the Town of Bridgewater, New Hampshire, in Town Meeting convened:

ARTICLE I: GENERAL PROVISIONS

A. No structure construction shall be commenced without the issuance of a Building Permit if the structure exceeds one hundred (100) square feet. No alterations or additions to the exterior of the structure shall be commenced without the issuance of a Building Permit. Swimming pools of any size, above or below the ground, require the issuance of a Building Permit. A Building Permit shall be required for conversions. (See Other Regulations and Ordinances section.)

B. The Building Inspector, who shall receive applications, shall be appointed by the Board of Selectmen to serve at their pleasure. It is the responsibility of the Building Inspector to see that the terms of these Regulations are fulfilled.

C. A sketch or plan, including a site plan and elevation of the proposed structure or alterations, shall be included with the request for a permit.

D. Upon receiving an application, the Building Inspector shall, within ten (10) days, issue the permit in writing over his signature unless he finds the proposed construction or alterations in conflict with the appropriate Town ordinances.

E. Periodic inspections of all construction and alterations shall be made by the Building Inspector to see that all appropriate ordinances of the Town are being fulfilled.

F. No structure shall be occupied until an occupancy permit has been issued by the Building Inspector certifying that all terms of all appropriate ordinances of the Town of Bridgewater have been fulfilled.

G. No building or structure shall be erected or rebuilt substantially, unless in compliance with the following:

1.1 **COMMERCIAL BUILDINGS**. No building intended or designed to be used for industrial, commercial, or other public use shall be erected, altered, or used for any purpose which does not provide non-combustible walls and partitions between its component parts.

1.2 **EXITS**. No building intended or designed for any public use or congregation of people shall be erected, altered, or used for any purpose which does not provide adequate exits, as described in Chapters 155 and 156, New Hampshire Revised Statutes, Annotated, 1955, and in regulations of the New Hampshire Fire Marshall's Office.

1.3 **FOUNDATIONS**. All structures shall be set on solid foundations of cement, brick, stone, or other acceptable masonry, except that in special cases where buildings are to be used for accessory use, industrial use, warehouses and the like, the Board of Selectmen may waive the requirement of this sections and permit the use of wood, metal, or masonry piers. Minimum requirements for single family seasonal residences shall be masonry piers.

1.4 **BUILDINGS**. Buildings must be framed according to good building practice and outside walls shall be covered with permanent materials customarily used, such as wood or fire resistant shingles, siding, clapboards, brick, stucco, concrete or cinder blocks or other acceptable material.

1.5 **CHIMNEY CONSTRUCTION**. Chimneys shall extend three feet (3') above the highest point where they pass through the roof of a building and at least two feet (2') higher than any portion of the building within ten feet (10').

No chimney shall be built, erected or altered below the roof having wood or other combustible materials within one inch (1") of the chimney and no chimney shall have its base resting upon any floor or beam of combustible material.

No **smoke pipe** shall be installed or erected so as to be within twelve inches (12") of any combustible floor, ceiling, wall or partition, unless amply protected with non-combustible material. No smoke pipe shall be installed or erected which passes through or into partitions or wall of combustible materials, except when guarded by a double collar of metal with air space of at least five inches (5") of brick or other non-combustible materials.

1.6 **ELECTRIC WIRING**. All electrical wiring shall conform with approved methods and practices for safety to life and property. Compliance with National Board of Underwriters shall be *prima facie* evidence of such approved methods and practices.

1.7 **MINIMUM BUILDING AREA**. Every dwelling unit to be used by a single family shall have a minimum ground floor area of five hundred (500) square feet. The foregoing does not apply to seasonal property.

1.8 **EXTERIOR FINISHED.** All buildings must be finished on the exterior within two (2) years after starting of the construction.

1.9 **BUILDING RELOCATION**. After passage of this ordinance, it shall be unlawful to relocate any building, except accessory buildings, without first obtaining a building permit from the Selectmen. No building of any value may be moved into Town without first obtaining a Building Permit from the Selectmen.

1.10 **SEASONAL CONVERSIONS.** Seasonal uses may be converted to continuous use upon the issuance of a building permit as stated in Article 1 A General Provisions. Seasonal use means the use of a structure for not more than six months in any calendar year.

Upon receiving an application for a seasonal conversion, the building inspector shall inspect the building along with the water supply and septic system and determine compliance with Building Regulations and appropriate Town Ordinances.

Required exhibits with each application shall include:

1. A plan of the septic system certified by a licensed designer as meeting the current requirements of the New Hampshire Water Supply & Pollution Control Division or a valid Approval for Construction under D.E.S. Env. – Ws 1004.08 and 1004.12.

2. Written approval of compliance with the New Hampshire Energy Code (RSA 155-D as a change in occupancy in zone 4) administered by the Public Utility Commission.

3. Documents showing that the proposed conversion will comply with the latest authorized edition (1995) of the CABO Council of American Building Officials, One- and Two-Family Dwelling Code.

4. Written acceptance by a representative of the Office of the State Fire Marshall that the proposed conversion will comply with the Life Safety Code (NFPA 101) latest authorized edition (1994).

ARTICLE II: ENFORCEMENT

Upon any well-founded information that this ordinance is being violated, the Selectmen shall take immediate steps to enforce the provisions of these Regulations by seeking an injunction in the Superior Court or by any other appropriate legal action. Whoever violates any of the above Regulations may be punished upon conviction by a fine not to exceed ten dollars ($10.00) for each day of each violation, plus all legal costs in connection with settling the issue.

ARTICLE III: TAKES EFFECT

These Regulations shall take effect upon their passage.

ARTICLE IV: CONFLICTING PROVISIONS

Wherever the regulations made under the authority hereof differ from those described by any statute, ordinance, or other regulations, that provision which imposes the greater restriction or the higher standard shall govern.

ARTICLE V: AMENDMENTS

These Regulations may be amended by a majority vote of any legal Town Meeting when such amendment is published in the Warrant calling for the meeting.

ARTICLE VI: VALIDITY

If any section, clause, provision, portion or phrase of these Regulations shall be held invalid or unconstitutional by any court or competent authority, such holding shall not affect, impair or invalidate any other section, clause, provision, portion or phrase of these Regulations.

TOWN OF BRIDGEWATER, NEW HAMPSHIRE

ZONING ORDINANCE

Adopted March 31, 1983

Amended March 8, 1988

Amended March 12, 1991

Amended June 8, 1991

Amended March 14, 1995

Amended March 12, 1996

Amended March 11, 1997

Amended March 10, 1998

Amended March 9, 1999

Amended March 11, 2003

Amended April, 2004

Amended March 8, 2005

Amended March 13, 2007

Amended March 09, 2010

Amended March 08, 2011

Amended March 10, 2015

Amended March 8, 2022

August 2023

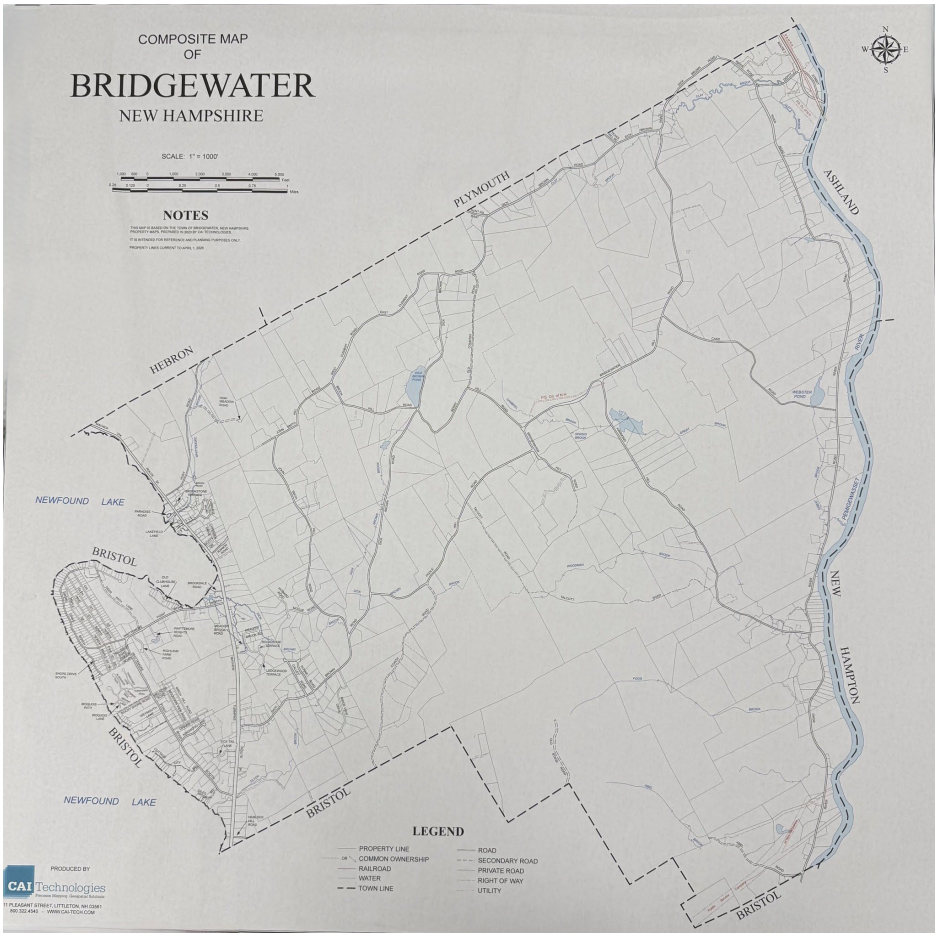

Commercial District

An area starting on Route 3A at the northern boundary of Lot #109-15, now or formerly owned by A. Nickerson, and proceeding northward to the Whittemore Point Road N.. The depth of this commercial zone to the west shall be five hundred feet (500'). On the easterly side of Route 3A starting at the southern boundary of Lot #108-2, now or formerly owned by Newfound Grocery, and proceeding north with a depth of five hundred feet (500') to the Dick Brown Brook.

Commercial/Industrial District

An area bounded by the Plymouth town line and the Pemigewasset River and a line five hundred feet (500') west of and parallel to Route 3 ending again south at the Pemigewasset River.

General Residential

Lake District

The portion of the General Residential District on the west side of town largely along Route 3A.

River Road District

The portion of the General Residential District on the east side of town , largely along the Pemigewasset River.

Rural Residential

This district is renamed the Mountain District

TOWN OF BRIDGEWATER, NEW HAMPSHIRE

ZONING ORDINANCE

ARTICLE I: PURPOSE AND AUTHORITY

Pursuant to the Authority conferred by Chapter 31, Sections 60–89, New Hampshire Revised Statutes Annotated, 1955, as amended, in conformity with the Town of Bridgewater Comprehensive Master Plan and for the Purpose of promoting the health, safety, prosperity, convenience or general welfare of the residents of Bridgewater, by:

- securing safety from fire and other dangers,
- providing adequate areas between buildings and various rights-of-ways,
- the promotion of efficiency, economy and good civic design in development,
- protection of the value of homes and lands,
- wise and efficient expenditure of public funds,
- and the adequate provision of public utilities and other public requirements;

This Ordinance is enacted by the voters of the Town of Bridgewater, New Hampshire in official Town meeting.

ARTICLE II: TITLE

This ordinance shall be known and may be cited as the "Zoning Ordinance of the Town of Bridgewater."

ARTICLE III: ESTABLISHMENT OF DISTRICTS AND DISTRICT REGULATIONS

A. Districts

The Town of Bridgewater is divided into the following districts as shown on the official Zoning Map:

GR - General Residential
1a. Lake District
1b. River Road District
RR - Mountain District
C - Commercial
CI - Commercial/Industrial

B. ZONING MAP

The districts, as established, are shown on a map entitled "Town of Bridgewater, N.H. Zoning Map" and becomes a part of this ordinance. This map is on file with the Bridgewater Planning Board. (A reduced reproduction is on the preceding page.)

C. DISTRICT BOUNDARIES

Unless otherwise indicated, zoning district boundaries, as shown on the "Town of Bridgewater, N.H. Zoning Map," are the center lines of highways and streets, the middle of the channel of waterways or shoreline of a water body, or the Town Boundary.

Where boundaries are so indicated that they parallel the center line of highways or streets, such boundaries shall be considered as parallel thereto and at the distance therefore as shown on the Zoning Map. The distance shall be determined by use of the scale on the map.

In any instance, where there is doubt as to the location of a zoning district boundary, the Zoning Board of Adjustment shall determine the location of such boundary, consistent with the intent of this Ordinance and the Zoning Map.

D. ZONING DISTRICT REGULATIONS

1. General Residential District: Lake District & River Road District

The purpose of this district is to provide for medium density development which has good access to existing Town and State roads, police, school busing and fire protection, and in keeping with the scenic, recreational and environmental values inherent in this district.

a. Permitted uses:

(1) One and two-family dwelling units.
(2) Home business.
(3) Manufactured Housing.
(4) Agricultural uses.
(5) Accessory building and uses.

b. Lot and frontage requirements:

(1) Lot size: The minimum area of any lot shall be at least two (2) acres in size, depending on soil and slope conditions, as may be suitable to sustain development according to State standards.

Wetland soils and slope areas of an incline of greater than fifteen percent (15%) may not be included in the minimum lot size.

The depth of any lot shall be no more than four times its frontage.

(2) Lot Coverage: The building coverage on any lot, including parking and driveway areas, shall not exceed thirty percent (30%) of any lot with the open area devoted to landscaping or natural growth.

(3) Frontage: The minimum lot frontage on any street, lake or river shall be one-hundred and fifty feet (150'). Lots may, however, have less (or no) street frontage if:

(a) Said lots are provided access to a public road by a deeded private right-of-way or driveway at least fifty feet (50') in width serving not more than one (1) lot, or

(b) Said lots located on curves, cul-de-sac or are affected by other such factors that sound planning justifies less frontage.

2. Mountain District:

The primary purpose of this district is to provide for low density rural living and open space, and to protect the environmentally sensitive areas of this district, such as wetland, poor soil conditions, steep slopes and prime agricultural soils. A detailed description of these areas may be found in the Bridgewater Master Plan (2006).

a. Permitted uses:
   (1) One and two-family dwelling units.
   (2) Home Business.
   (3) Manufactured Housing.
   (4) Agricultural uses.
   (5) Accessory buildings and uses.

b. Lot and frontage requirements:

(1) Lot Size: The minimum area of any lot shall be at least five (5) acres, depending on soil and slope conditions, as may be suitable to sustain development according the State standards.

Each lot shall contain within the required lot size a minimum suitable site of thirty thousand (30,000) contiguous square feet which meets current New Hampshire Water Supply and Pollution Control Division standards.

There shall be no areas with slopes greater than thirty percent (30%) included. The Planning Board may request a test pit prior to subdivision approval.

(2) Lot coverage: The building coverage on any lot including parking and driveway shall not exceed percent (15%) of any lot, with the open space area devoted to landscaping or natural growth.

(3) Frontage: The minimum lot frontage on any street shall be three hundred feet (300'). Lots may, however, have less (or no) street frontage if:

(a) Said lots are provided access to a public road by a deeded private right-of-way or driveway at least fifty feet (50') in width serving not more than one lot.

(b) Said lots are located on curves, cul-de-sac or are affected by other such factors that sound planning justifies less frontage.
The depth of any lot shall be no more than five (5) times its frontage.

3. Commercial District:

The purpose of this zone is to provide an area for the location of commercial uses.

(a) Permitted uses:

(1) Commercial uses
(2) Uses allowed in the General Residential and Rural Residential zones

(b) Lot size and frontage requirements shall be the same as those applicable in the General Residential District.

4. Commercial/Industrial District:

The purpose of this zone is to provide an area for the location of both commercial and industrial uses without mixing these uses in more traditional residential areas of the town.

(a) Permitted uses:

(1) Commercial uses
(2) Light Industrial uses
(3) Uses allowed in all other zones

(b) Lot and frontage requirements shall be the same as those applicable in the General Residential District-Lake District & River Road District.

ARTICLE IV: GENERAL PROVISIONS

The following provisions shall apply to each district and to all uses within the Town of Bridgewater except where listed:

A. OBNOXIOUS USE, REFUSE AND JUNKYARDS

1. No Use is permitted that may be obnoxious or injurious by reason of production, emission of odor, dust, smoke, refuse matter, fumes, noise, vibration or similar conditions, or that is dangerous to the comfort, peace, enjoyment, health or safety of the community or lending to its disturbance or annoyance, or that is deleterious or damaging to the value of adjoining or abutting premises.

2. Refuse and recyclable materials from commercial, light industrial, and residential settings shall be screened from view, or housed, prior to their regular removal.

3. No person, firm or corporation shall keep or maintain within the limits of the Town, any junk yard, dump, or any other matter upon his or its premises, or permit or allow the same to be so kept, used or maintained, so near to any highway, park, street or alley or other public place, or adjoining or abutting any land owned or occupied by another person, firm or corporation so as to be:

i. Offensive or damaging to the use and enjoyment of the public of said highway, park, street or alley or other public place;
ii. Offensive or damaging to the occupants, enjoyment or value of adjoining or abutting premises by its owner or occupants;
iii. A menace to public health; or

iv. Discharges the content thereof upon any highway, park, street, alley or other public place, or upon the land of any person, firm or corporation."

B. FRONT, SIDE AND REAR YARD SETBACK

There shall be a minimum distance of thirty-five (35)' feet between any structure and the edge of any highway, street, road or road right-of-way whether public or private.

No structure shall be located within twenty feet (20') of any boundary of the lot on which it is located.

No structure shall exist with in fifty feet (50') of any lake, river, or the following brooks: Dick Brown, Woodman, Clay, Whittemore, Great, Fogg, Able and Tilton.

C. STRUCTURE HEIGHT

No structure, or part thereof, shall exceed thirty-six feet (36') in height as measured from the high point thereof to the natural or graded permanent ground level at the wall of the structure at any point.

This provision shall not apply to television and radio antennae, lightning rods, steeples, cupolas, chimneys, or utility poles or parts of buildings designed exclusively for agricultural or non-residential uses.

D. OFF-STREET LOADING AND PARKING

Adequate off-street loading and parking shall be provided whenever any new use is established or any existing use is enlarged in accordance with the following specifications:

(1) All new construction of institutional, commercial or industrial uses requiring off-street loading facilities shall provide such facilities so that delivery vehicles are parked off the traveled way.

(2) All proposed new development shall provide for adequate off-street parking spaces in accordance with the following standards: A single parking space is defined as being two hundred (200) square feet in area and having additional adequate area for maneuvering.

- (a) Residential use: Two (2) spaces for each family unit.
- (b) Hotel, motel, tourist accommodation or lodging unit: One (1) space for each unit.
- (c) Commercial and Industrial: One (1) space for each three (3) anticipated patrons and/or employees on the premises at any one time.
- (d) Restaurant: One (1) space for each four (4) seats anticipated.
- (e) Public assembly — any theater, hall or auditorium: provision for at least one (1) space for each six (6) seats anticipated.
- (f) Where one (1) building is used for lodging or motel accommodation with a restaurant: One (1) space for each eight (8) seats anticipated within the restaurant.

E. SIGNS

(1) This section shall regulate the standards for signs or other advertising devices. The intent is to recognize and to protect the established character, natural beauty and roadway safety of the Town of Bridgewater.

(2) All signs shall be maintained in good condition and good repair at all times. Any sign that is or becomes in disrepair in the opinion of the Selectmen shall, if not repaired within thirty (30) days, be removed upon written order of the Selectmen. Any sign that refers to a discontinued use shall be removed within thirty (30) days of written order of the Selectmen. If the owner fails to comply, the Selectmen shall have the sign removed at the expense of the owner.

(3) Each new sign, unless exempted (paragraph 11), must receive from the Selectmen or their designated agent a permit before erection. An application for a sign permit shall include site location, sign size, method of illumination, if any, and types and colors of materials to be used in construction and supporting structure.

(4) Flashing, moving, revolving or animated signs are prohibited as are "look at me" devices such as pennants and whirligigs. No stationary-vehicle or portable signs shall be permitted. Flags with no commercial message measuring no more than eight (8) square feet are specifically exempted as are incidental signs. Illuminated signs shall be shielded in such a way as to produce no glare, undue distraction, confusion or hazard to the surrounding area or to vehicular traffic.

(5) Only signs advertising a business or industry in the Town of Bridgewater shall be permitted. On-site signs shall not exceed two (2) per business or industry. Off-site directional signs shall be limited to two (2) such signs so placed within town limits.

(6) The height of any free-standing sign shall not exceed fifteen (15') feet above the surrounding ground level. Signs that are affixed to a building shall not extend above the roof ridge of that building. A wall sign shall be limited to one (1) per property, shall not extend beyond the limits of its wall, and shall measure no more than twenty (20%) percent of the wall area to which it is affixed.

The area of all signs shall be measured within the maximum dimensions of the signs, and shall include any air space included within such dimensions. Signs shall not be attached to trees in the public right-of-way, public utility poles or structures not specifically designed for that purpose.

The maximum square footage of any on-site sign shall not be larger than fifty (50) square feet in area per side. The maximum square footage of any off-site directional sign shall not be larger than four (4) square feet in area per side.

(7) Signs advertising home occupations or businesses in all zones except the Commercial and Light Industrial Districts (a) shall be non-illuminated but otherwise conform to paragraph 4 above, (b) shall be limited to two in number, and (c) shall be displayed on the applicable property only. The total area shall not be more than nine (9) square feet per side in area for each sign.

(8) The use of temporary non-illuminated real estate signs indicating property for sale, rent or lease in the Town of Bridgewater is permitted. These signs shall be located only on the subject property, and there shall not be more than two (2) signs per lot and each shall total not more than four (4) square feet in area per side. *Off-site generic directional signs less than two (2) square feet in area per side shall be limited to two (2) such signs within town limits. Only one such sign may be present at any intersection.*

9) A temporary on-site sign not exceeding nine (9) square feet in area per side that advertises construction on the premises is permitted but limited to one (1) consolidated sign identifying

contractors, architects, engineers, banks and other artisans, while working on-site. Such signs are to be removed upon the sale or rental of the premises or completion of the construction.

(10) Temporary signs that advertise fairs, auctions, private sales or special events in the Town of Bridgewater shall be permitted for one (1) month before the event and shall be removed within two (2) days following the event.

(11) Residential nameplate or name place signs less than two (2) square feet in area per side and signs indicating private property, no trespassing, no hunting or similar non-commercial signs, and all official Town of Bridgewater, State and Federal signs shall be exempt from these regulations.

(12) Non-conforming signs legally erected prior to January 1, 1997 may be continued and maintained until January 1, 2002. Such a sign shall not be altered or enlarged unless it is brought into conformity. Any sign that has been removed or destroyed by any means to an extent of more than 50 percent of the replacement value at the time of destruction shall not be replaced, repaired, or rebuilt except in conformity with this ordinance.

(13) No sign shall be permitted which overhangs any public right-of-way, street or sidewalk.

(14) Definitions:

(1). Sign: In this section "sign" shall mean a structure, building wall, supporting post(s), other outdoor surface, or any device such as a flag or banner used for visual communication which is designated for the purpose of bringing the subject thereon to the attention of the public; or to display, identify, or publicize the name and product, or service of any person.

(2). Animated Sign: An animated sign is any sign that uses movement or change of lighting to depict action or create a special effect or scene. Any sign on which the message changes more than eight (8) times per day shall be considered an animated sign.

(3). Incidental Signs: A sign, generally informational, that has a purpose secondary to the use of the zone lot on which it is located, such as "no parking", "entrance", "loading only", "telephone", and other similar directives. No sign with a commercial message legible from a position off the zone lot on which the sign is located shall be considered incidental.

(4). Portable Signs: Any sign not permanently attached to the ground or other permanent structure, or a sign designed to be transported, including, but not limited to, signs designed to be transported by means of wheels; signs converted to A- or T-frames; menu and sandwich board signs; balloons used as signs; umbrellas used for advertising; and signs attached to or painted on vehicles parked and visible from the public right-of-way, unless said vehicle is used in the normal day-to-day operations of the business.

(5) Generic Directional Sign: A directional sign which does not include any business name or logo, only e.g., "House for Sale"

F. FLOOD AREA

See: Town of Bridgewater Floodplain Development Ordinance which is located as Appendix A in a separate section following this Ordinance.

G. REMOVAL OF NATURAL MATERIAL

If clay, sod, loam, sand or gravel is removed within one-hundred feet (100') of any public highway, street or roadway, the area shall be regraded and redressed to assure that the premises will be left in a sightly condition and protected against erosion and washouts within ninety (90) days of the finish of operation and/or unsightly materials removed. All other earth excavation for commercial purposes shall be governed in accordance with New Hampshire RSA 155:E.

All grading, slopes and embankments shall be maintained against ordinary erosion which might otherwise occur as a result of the construction of roads, driveways or structures. All construction operations shall be controlled by the owner to prevent erosion debris and other loose materials from washing into any drainage courses, street or abutting property.

H. HOME BUSINESS

(1.) **Definition.** Home Business is a professional or service business for gain conducted primarily on the residential premises. It is the intent of this ordinance to keep Home Businesses from altering the character of the residential area or neighborhood.

(2.) **Standards. A Home Business will:**

a. Be located within the primary dwelling or any structure on the lot (garage, barn, outbuilding, etc.) accessory to the dwelling unit.
b. Be conducted by the occupant and immediate family members with no more than two (2) non-family members employed.
c. Be incidental and clearly secondary to the use of the property as a dwelling for dwelling purposes.
d. Not change the residential character thereof, and will be minor (not more than 25% of the home) compared to the area used for living.
e. Not utilize more than twenty-five (25%) of the gross floor area (including basement and accessory structures) of the dwelling.
f. Be limited to no more than two (2) Home Businesses on a lot at one time.
g. Have no more than two (2) commercial vehicles kept overnight at the premises, unless shielded from sight by garage, fencing, etc.
h. Have no exterior renovations that change the outside appearance of the dwelling or accessory structures that are not keeping with the character of the residential area or neighborhood.
i. Have no outside storage of materials.
j. Not adversely affect the premise or neighboring properties by emitting sight, light, noise, smell, traffic, sewerage, water or other effects of the Home Business in excess of what is normal in the residential neighborhood.
k. Provide adequate off-street parking for anticipated customers.
l. Only have a business sign that is in keeping with the character of the premise and neighborhood. The sign must not be internally illuminated, have more

than two sides, be more than nine (9) square feet, and must not cause undue obstruction of sight. (Separate permit required.)

m. Not be such that it requires regular or frequent service by heavy commercial trucks since this would adversely impact the character of the neighborhood.

(3.) **Examples of <u>permitted</u> Home Business:**

a. Child Care – see below
b. Seamstress, Tailor, Shoe smith
c. Plumbers, Electricians, Remodeling contractors
d. Writer
e. Telephone answering service
f. Art, Crafts, Hobby, Photography, Antique shops
g. Tutoring (four students at a time)
h. Music Teacher
i. Home cooking/preserving
j. Computer programmer/repair
k. Bookkeeper, Accountants, Secretarial services
l. Real estate and Insurance sales
m. Beautician, Barber
n. Massage Therapy
o. Small engine repair (lawnmower, chainsaw, snow blower)

(4.) **Home Business that are <u>NOT permitted:</u>**

a. Doctor
b. Dentist
c. Firewood processing & sales operation
d. Motor vehicle repair (auto, truck, heavy equipment, marine, snowmobile and golf carts)

(5.) **Child Care.** Any Child Care <u>must</u> comply with New Hampshire Child Care Facility (Day Care) Licensing & Operating Standards, under RSA 170-E:3. The following categories and criteria will apply to all considerations for Child Care as a Home Business:

a. **Family Day Care Centers** are permitted as a Home Business. A Family Day Care Center provides for three (3) to six (6) children from one (1) or more unrelated families including children under six (6) years old who live in the home and others related to the applicant. In addition to the six children, one (1) to three (3) children attending a full day school program may also be cared for up to three (3) hours per day on school days and all-day during school holidays. Thirty-five (35) square feet of space must be allocated per child and the total must comply with the twenty-five (25%) rule to qualify as a Home Business.

b. **Family Group Day Care** is permitted as a Home Business. A Family Group Day Care provides care for seven (7) to twelve (12) children from one (1) or more unrelated families including children under six (6) years old who live in the home and others related to the applicant. Thirty-five (35) square feet of space must be allocated per child and the total must comply with the twenty-five (25%) rule to qualify as a Home Business.

c. **Group Child Care Centers** are <u>NOT</u> permitted as a Home Business. A Group Child Care Center is either a full or half day child care facility (whether or not the

facility is known as a day nursery, nursery school, kindergarten, etc.) by which services are regularly provided for any part of a day, but less than twenty-four (24) hours to thirteen (13) or more children.

(6.) **Exceptions.** Any exception to a Home Business that does not meet the standards outlined will be submitted to the Zoning Board of Adjustment for approval and/or conditional use. Any non-conforming, as a of the date of this ordinance, shall not increase or be transferable. If a non-conforming use is discontinued or abandoned for one (1) year, it shall thereafter conform to this ordinance and the non-conforming use may not be resumed without approval of the Zoning Board of Adjustment.

(7.) **Violations.** These standards shall be administered and enforced by the Board of Selectmen. Any person who violates the provisions of this section shall be fined $100 for each offense each day that a violation is continued. No action may be brought about under this provision unless the Selectmen have given the alleged offender at least 7 days notice that a violation exists by certified mail, return receipt requested.

(8.) **Permit & Fee Schedule.** An application for a Home Business must be completed and submitted to the Board of Selectmen for approval. Permits are good for one (1) year, with the permit period being May 1st to April 30th. The permit fee is $10.00 annually.

I. PEMIGEWASSET RIVER SHORELINE PROTECTION

The purpose of this section is to mimic the protections afforded other rivers that are protected by the Comprehensive Shoreline Protection Act (CSPA).

The shoreline along the Pemigewasset River is among the town's most valuable and fragile natural resources. It contains virtually all of the town's aquifers, which distinguishes it from other in-town surface water bodies. Approximately half the pollutants entering the river/aquifer system are from surface runoff sources. The protection is designed to: a) intercept runoff pollutants, b) support recharge of critical groundwater/aquifer inventories, and c) maintain river flows and class B water quality status.

1. Buffers

Where existing, a natural woodland buffer shall be maintained within 150 feet of the reference line. The purpose of this buffer shall be to protect the quality of public waters by minimizing erosion, preventing siltation and turbidity, stabilizing soils, preventing excess nutrient and chemical pollution, maintaining natural water temperatures, maintaining a healthy tree canopy and understory, preserving fish and wildlife habitat, and respecting the overall condition of the protected shore land.

The following minimum standards shall apply to the protected shore land, provided that forest management not associated with shore land development or land conversion, and conducted in compliance with RSA 227-J:0; forestry involving water supply reservoir watershed management; or agriculture conducted in accordance with best management practices; shall be except from the provisions of this section:

a. Not more than a maximum of 50 percent of the basal area of trees, and a maximum of 50 percent of the total number of saplings shall be removed for any purpose in a 20-year period.

A healthy, well-distributed stand of trees, saplings, shrubs and ground covers and their living, undamaged root systems shall be left in place. In addition to other enforcement remedies provided by the law, the Town may order a person violating this provision to replace improperly removed vegetation using native or naturalized species.

b. Trees, saplings, shrubs and ground covers which are removed to clear an opening for building construction, accessory structures, septic systems, roadways, pathways, and parking areas shall be excluded when computing the percentage limitations under Article 1A. The excluded area shall extend a maximum of 25 feet from a primary structure and 10 feet from an accessory building.

c. Dead, diseased, unsafe, or fallen trees, saplings, shrubs, or ground cover may be removed. Their removal shall not be used in computing the percentage limitations under Article 1A.
d. Stumps and their root systems which are located within 50 feet of the reference line shall be left intact in the ground, unless removal is specifically approved by the Planning Board.

2. Prohibited Uses. The following uses are prohibited within 250' of the reference line:

a. Construction of primary structures or garages within 50 feet of the reference line.
b. Construction on slopes which exceed fifteen percent.
c. Mobile home parks.
d. Establishment or expansion of
    1. salt storage years
    2. junk yards
    3. solid or hazardous waste facilities
e. Bulk storage of chemicals, petroleum products or hazardous materials.
f. Sand and gravel excavations as defined in RSA 155-E.
g. Processing of excavated materials.
h. Use or processing of any fertilizer, except limestone, within 25 feet of the reference line on any property. Twenty-five feet beyond the reference line, low phosphate, slow-release nitrogen fertilizer or limestone may be used on lawns or areas with grass.
i. Dumping or disposal of snow and ice collected from roadways or parking areas more than 500' from the reference line.
j. Diversion of the river.
k. Processing or application of sludge or bio solids.

3. Minimum Lot Requirements. The following restrictions apply to lots that lie in whole or in part within the protected shore land.

a. The minimum lot size is two acres.
b. Building lot dimensions shall not have less than one hundred and fifty (150) feet of shore line frontage per one (1) residential dwelling unit, individual campsite, or individual lodging unit, with deeded rights of use or access. Each additional unit shall require an additional twenty (20) feet of shore line frontage.
c. Building lot dimensions shall not have less than one hundred (150) feet of road frontage.
d. Setback: No primary structure or automobile garage shall be located within fifty (50) feet of the reference line.
e. Accessory buildings such as storage sheds and gazebos, but excluding automobile garages, may be closer than fifty (50) feet from the reference line as a special exception provided:
    1. The location and construction of the structure is consistent with the intent of this ordinance to maintain a vegetated buffer.

2. The structure is required as a shelter for equipment or firewood, or as a non-residential shelter for humans.
3. The structure is usually customary and incidental to a legally authorized use located within the protected shoreland.
4. Impervious cover within the fifty (50) foot building setback shall not exceed 200 square feet.

4. Erosion and Siltation Control

a. All new structures, *modifications to existing structures, and excavation or earth moving,* within 250' of the reference line, shall be designed and constructed in accordance with rules adopted by the DES pursuant to RSA 541-A, relative to terrain alteration under RSA 485-A:17, for controlling erosion and siltation of public waters, during and after construction and shall, at a minimum reflect the recommendations of the publication entitled *Stormwater Management and Erosion and Sediment Control Handbook for Urban and Developing Areas in New Hampshire* prepared for the DES by the Rockingham County Conservation District, in cooperation with USDA Natural Resources Conservation Service, August, 1992, and meet all applicable EPA regulations.
b. New structures *(and all modifications to existing structures)* shall be designated and constructed to prevent the release of surface runoff across exposed mineral soils.
c. NPDES Permit shall be required if applicable.

5. Non-Conforming Uses

Existing uses, which are non-conforming under this ordinance, may continue until the use ceases to be active or is discontinued for a period of one year. An existing non-conforming use may not be changed to another non-conforming use. Existing non-conforming uses shall be required to meet the shore land natural buffer, drainage and related water quality protection requirements of this ordinance to the maximum extent feasible.

6. Commonly Used Water Front Parcels or Lots

Shore land lot parcels, which are intended for use for common access by the non-shoreland property owners within the development or subdivision which owns or has control over the common land, shall meet the following requirements:

a. Contain a minimum of five (5) acres.
b. Have a minimum shoreline frontage of 150 feet for the first ten residential units and an additional twenty (20) feet for each additional unit.
c. The minimum road frontage required shall be one hundred (150) feet.
d. Building setbacks shall conform to the provisions of 3d.
e. No building other than toilet, changing facilities and picnic shelters shall be constructed. Necessary leach fields shall be located at least 125 feet from the reference line.
f. At least one half of the shoreline frontage shall be reserved for swimming. Swimming areas shall be separated from boating areas by appropriate markers.
g. No more than 25% of the total shore frontage may be dedicated to docks or other structures designed to accommodate boating. A water dependent structure, meaning one which is a dock, wharf, pier, breakwater, or other similar structure, or any part thereof, shall be constructed only as approved by the NHDES Division of Water, pursuant to RSA 482-A.
h. A parking area of three hundred (300) square feet adjacent to the waterfront lot shall be provided for each dwelling unit, campsite, or individual lodging unit located in excess of one

thousand (1,000) feet from the waterfront property to which it has deeded access. Parking shall be permitted only in the designated parking area.

i. Toilet facilities shall be provided on the basis of one facility each for men and women for each 25 residential units or portion thereof granted rights of access. The Planning Board may adjust this requirement at its discretion where fewer than 15 units have access to the shore front common area.

Definitions

Basal Area – The cross-sectional area of a tree measured at a height of 4 ½ feet above the ground, usually expressed in square feet per acre for a stand of trees.

Bulk Storage – Storage in containers larger than those normally intended for retail distribution. Storage of up to 600 gallons of fuel oil or propane will not be considered bulk storage.

Disturbed Area – An area in which natural vegetation is removed, exposing the underlying soil.

Ground Cover – Any herbaceous plant or woody plant which normally grows to mature height of 4 feet or less.

Impervious Cover – Any roof, driveway, parking area, sidewalk or similar area. Such surfaces include, but are not limited to, buildings, driveways of any type, streets, parking lots, swimming pools, and tennis courts.

Natural Woodland Buffer – Natural woodland buffer means a forested area consisting of various species of trees, saplings, shrubs, and ground covers, in any combination and at any stage of growth – that exists or is established to protect a stream system, lake, or reservoir. Alteration of this natural area is strictly limited.

Ordinary High Waterline – The line on the shore, running parallel to the main stem of the river, established by the fluctuations of water and indicated by physical characteristics such as a clear, natural line impressed on the immediate bank, shelving, changes in the character of soil, destruction of terrestrial vegetation, the presence of litter and debris, or other appropriate means that consider the characteristics of the surrounding areas. Where the ordinary high-water line is not easily discernible, the ordinary high-water line may be determined by DES.

Primary Structure – A structure other than one which is used for purposes wholly incidental or accessory to the use of another structure on the same premises.

Reference Line – The ordinary high-water line. (Defined above)

Residential Dwelling Unit – A structure, or portion thereof, providing complete and independent living facilities, including permanent facilities for living, sleeping, eating, cooking, and sanitation, which are used in common by one or more persons.

Sapling – Any woody plant which normally grows to a mature height of less than 20 feet.

Shoreline Frontage – The average of the actual natural navigable shoreline footage and a straight line drawn between property lines, both of which are measured at the reference line.

Shrub – Any multi-stemmed woody plan which normally grows to a mature height of less than 20 feet.

Tree – Any woody plant which normally grows to a mature height greater than 20 feet and which has a diameter of 6 inches or more at a point 4 feet above the ground.

ARTICLE V. SPECIAL PROVISIONS

A. CLUSTER RESIDENTIAL DEVELOPMENT

The objective of a Cluster Residential Development is to encourage flexibility in residential development design by permitting mixed housing types, which may be grouped on lots of reduced dimensions to allow for a more economic provision of street and utility network, and to encourage the preservation and recreational use of open space in harmony with the natural terrain, scenic qualities, and outstanding land features. The remaining land in the tract which is not built upon is reserved as permanently protected open space.

Proposals for cluster development must go to the Planning Board for subdivision approval and must comply with applicable provisions of the Bridgewater Subdivision Regulations.

The following standards shall be met by all Cluster Residential Development:

1. Where clustering or multiple dwelling units are permitted, the minimum lot size for each dwelling unit within the cluster shall be determined by the Planning Board based upon the character of the land involved, the type of housing proposed and the need for adequate on-site sewage disposal, as determined by the New Hampshire Water Supply and Pollution Control Division standards.

   Where a community sewer disposal system located on common land is permitted, a legal responsibility for ownership and maintenance must be established as part of the approval process.

   (a) In the areas of the town where land and buildings abut or are adjacent to lake or river frontage, special exceptions may be granted where a proposal shows a reduction in density and the lessening of the amount of on-site sewerage generated. Such a proposal shall be subject to the existing standards of the New Hampshire Water Supply and Pollution Control Division and requires the Division's approval against those standards at the time of submission for a variance.

2. The total number of dwelling units to the acre shall remain at the same overall density as required in each zoning district. The land area not used for individual lots, construction of buildings and roads shall be permanently maintained as open space or common land for the purposes of recreation, conservation, park or public easement or agriculture. The open space or common land or any portion of it shall be held, managed and maintained by the developer until it is owned in one or more of the following ways.

   (a) By a Homeowner's Association, set up by the developer and made a part of the deed or agreement for each lot or dwelling unit.

   (b) By a Conservation Trust or private non-profit organization, such as the Forest Society or Audubon Society, which will ensure that the common land will be held in perpetuity as open space.

(c) By the developer, as appropriate, for areas such as golf courses, outdoor recreational areas and enclosed recreational facilities.

3. All agreements, deed restrictions, organizational provisions for a Homeowner's Association and any other method of management of the common land shall be established prior to approval.

4. Each dwelling unit shall have reasonable access to the common open land, but need not front directly on such land.

5. The plan shall provide for the convenience and safety of vehicular and pedestrian movement on the site and for the adequate location of driveways in relation to street traffic. Maximum building height, parking standards and minimum distance from lot lines shall be required.

B. WATERFRONT RIGHT-OF-WAYS

The purpose of this provision is to provide guidelines for the development of back land with access to Newfound Lake and the Pemigewasset River.

Rights to gain access to these water bodies through or by means of any waterfront land in the Town of Bridgewater shall not be created or attached to any real estate, except in accordance with the standards set forth below and subject to Planning Board approval. Any owner granting rights of waterfront use and access shall comply with the following standards.

1. Waterfront Area:

   The minimum area of any waterfront lot shall not be less than two (2) acres; or sixteen hundred (1600) square feet per dwelling unit served; or four hundred (400) square feet per person in a group development, whichever is the greater.

2. Water Frontage:

   Said lot shall have not less than one hundred fifty (150) linear feet of shore frontage, with an additional eight (8) linear feet of shore frontage for each additional dwelling unit over twelve (12) units; or for a group development, the provision of two (2) linear feet per person for whom the facility is proposed.

3. Parking:

   An area of three-hundred (300) square feet for parking shall be reserved for each dwelling unit; or for each four persons in the case of a group development that is planned in excess of one thousand feet (1,000') from the waterfront property.

4. Toilets:

   One (1) toilet facility each for males and females shall be provided for each twenty-five (25) dwelling units or fraction thereof planned, or for each fifty (50) persons for whom the facility is proposed in the case of a group development.

C. MOBILE HOME PARK STANDARDS

(deleted March 16, 1995)

D. RECREATION CAMPING PARK STANDARDS

The following regulations shall apply with respect to all recreational camping parks.

1. A recreational camping park shall have an area of not less than five (5) acres.

2. Each tent, recreation vehicle or trailer space shall be at least one thousand eight hundred (1,800) square feet in area and at least thirty feet (30') in width and shall have a suitable parking area of at least ten feet (10') in width and twenty feet (20') in depth.

3. A strip of land at least fifty feet (50') in width shall be maintained as a landscaped area abutting all recreational camping park property lines.

4. Every recreational camping park shall have a dumping station for sewage disposal, meeting all applicable State and local laws and regulations. The water supply source must meet all local and State regulations.

5. Each recreational camping park shall provide one or more service buildings containing flush-type toilets. Separate toilet areas shall be provided for males and females in accordance with all applicable State and local laws.

   Toilet rooms shall contain one lavatory with running water for each two toilets, but in no case shall any toilet room be without at least one lavatory with running water.

6. Every recreational camping park shall have a dumping station for sewage disposal, meeting all applicable State and local laws and regulations. The water supply source must meet all local and State regulations.

E. SEASONAL CONVERSIONS

All seasonal use property in existence when this Ordinance is passed and adopted shall be indexed and recorded in the Town Offices.

Proposed conversions shall require a special exception by the Board of Adjustment in all Districts in accordance with Article III D - Zoning District Regulations.

F. PERSONAL WIRELESS SERVICE FACILITIES

1.0 Purpose and Intent

It is the express purpose of this Ordinance to minimize the visual and environmental impacts of personal wireless service facilities while providing quality service coverage in Bridgewater New Hampshire. The Ordinance enables the review and approval of personal wireless service facilities by the Town's Planning Board.

2.0 Overview

The process for application is set forth in section 10.0 of this ordinance. The applicant is encouraged to have at least one Pre-Application Conference before the Planning Board to discuss the service facility in general terms and to clarify the filing requirements. Complete applications shall be reviewed and acted upon at one or more public meetings of the Planning Board. The Planning Board may contract with appropriate professionals, as necessary, to aid in the valuation and assessment of proposals submitted for their review. All costs for such expertise shall be borne by the Applicant.

3.0 Definitions

Above Ground Level (AGL). A measurement of height from the natural grade of a site to the highest point of a structure.
Antenna. The surface from which wireless radio signals are sent and/or received by a personal wireless service facility.

Antenna Array. A collection of antennas attached to a mount to send and receive radio signals.

Average Tree Canopy Height. An average height found by inventorying the height of all trees over twenty (20) feet in height within a 150-foot radius of the proposed facility site.

Camouflaged. To conceal by such means as to create the effect of being part of the natural surroundings.

Carrier. A company that provides wireless services, also referred to as a Provider.

Co-location. The use of a single mount on the ground by more than one carrier (vertical co-location) or the same carrier with multiple licenses and/or several mounts on an existing building or structure for use by more than one carrier, or the same carrier with multiple licenses.

Cross-polarized (or dual-polarized) antenna. A low mount that has three panels flush mounted or attached very close to the shaft.

Elevation. The measurement of height above sea level.

Environmental Assessment (EA). An EA is the document required by the Federal Communications Commission (FCC) and the National Environmental Policy Act (NEPA) when a personal wireless service facility is placed in certain designated areas.

Equipment Shelter. An enclosed structure, cabinet, shed, vault or box at or near the base of the mount within which are housed batteries and electrical equipment, also referred to as a Base Transmitter Station.

Fall Zone. The area on the ground from the base of a ground mounted personal wireless facility that forms a circle with a diameter equal to the height of the facility, including any antennas or other appurtenances, as set forth below. The fall zone is the area within which there is a potential hazard from falling debris (such as ice) or collapsing material.

Functionally Equivalent Services. Cellular, Personal Communication Services (PCS), Enhanced Specialized Mobile Radio, Specialized Mobile Radio and Paging.

Guyed Tower. A tower that is tied to the ground or other surface by diagonal cables for lateral support.

Lattice Tower. A type of mount that is self-supporting with multiple legs and cross-bracing of structural steel.

Licensed Carrier. A company authorized by the Federal Communications Commission (FCC) to construct and operate a commercial mobile radio services system.

Mast. A thin pole that resembles a streetlight standard or a telephone pole. A dual-polarized antenna is typically deployed on a mast.

Monopole. A type of mount that is self-supporting with a single shaft of wood, steel, concrete or other materials.

Mount. The structure or surface upon which antennas are mounted, including the following four types of mounts:

1. Roof-mounted: Mounted on the roof of a building.
2. Side-mounted: Mounted on the side of a building.
3. Ground-mounted: Mounted on the ground.
4. Structure-mounted: Mounted on a structure other than a building.

Omnidirectional (whip) antenna. A thin rod that beams and receives a signal in all directions.

Panel Antenna. A flat surface antenna usually developed in multiples.

Personal Wireless Service Facility. Facility for the provision of a personal wireless services, as defined by the Telecommunications Act of 1996, as amended. Personal Wireless Service Facilities include a mount, antenna, equipment shelters and other related equipment.

Personal Wireless Services. Mobile radio services, unlicensed wireless services, and common carrier wireless exchange access services are the FCC personal wireless services as described in the Telecommunications Act of 1996, as amended.

Radio Frequency (RF) Engineer. An engineer specializing in electrical or microwave engineering, especially the study of radio frequencies.

Radio Frequency Radiation (RFR). The emissions from personal wireless service facilities.

Security Barrier. A locked, impenetrable wall, fence or berm that completely seals an area from unauthorized entry or trespass.

Separation. The distance between one carrier's array of antennas and another carrier's array.

4.0 District Regulations for New Facilities. Personal wireless service facilities shall be permitted in all Zoning District, except as restricted by this Ordinance. A personal wireless service facility shall require a building permit in all cases and may be permitted as follows:

4.1 Additional antennas(s) may be located on any existing guyed tower, lattice tower, monopole, electric utility transmission tower, or water tower, provided that the installation of the new array does not increase the height of the existing structure except as provided below, and provided that such installation preserves the character and integrity of those structures. Such installations shall require Site Plan Approval.

A personal wireless service facility involving construction of one or more ground or building (roof or side) mounts shall require Site Plan Approval. Such facilities may locate by Site Plan Approval in the zoning districts outlined in this Ordinance, provided that the proposed use complies with the setback requirements standards criteria found in the Bridgewater Zoning Ordinances.

5.0 Location

If feasible, personal wireless service facilities shall be located on existing structures, including but not limited to buildings, water towers, existing telecommunications facilities, utility poles and towers, and related facilities, provided that such installation preserves the character and integrity of those structures. Applicants seeking approval for personal wireless service facilities shall comply with the following:

5.1 The applicant shall have the burden of proving that there are no existing structures within the region, which are suitable to locate its personal wireless service facility and/or transmit or receive radio signals. To meet this burden, the applicant shall take all of the following actions to the extent applicable.

5.1.1 The applicant shall submit to Planning Board a list of all contacts made with the owners of potential sites (buildings, water towers, existing telecommunications facilities, utility poles and towers, and related facilities) regarding the availability of potential space for a Personal Wireless Service Facility. The Planning Board, at its option, may provide a list of additional suitable sites. The applicant shall contact the property owner(s) of those structures.

5.1.2 The applicant shall provide copies of all letters of inquiry made to owners of existing buildings, water towers, existing telecommunications facilities, utility poles and towers, and related facilities along with all rejection documentation. If letters of rejection are not provided, at a minimum, unanswered "Return Receipt Requested" forms from the US Post Office shall be provided for each owner of an existing building, water tower, existing telecommunications facility, utility pole and tower, and related facility that was concealed.

5.2 If the applicant demonstrates that it is not feasible to locate on an existing structure, personal wireless service facilities shall be designed so as to be camouflaged to the greatest extent possible, including but not limited to: use of compatible building materials and colors, screening, landscaping and placement within trees.

5.3 The applicant shall submit documentation of the legal right to install and use the proposed facility mount at the time of application for a building permit and Site Plan Approval.

6.0 Dimensional Requirements. Personal wireless service facilities shall comply with the following requirements:

6.1 Height, General.

In the absence of trees or vegetation, regardless of the type of mount, personal wireless service facilities shall not exceed 40 feet. In areas where there are trees or vegetation over 20 feet in height within a 150-foot radius of the proposed facility height, personal wireless service facilities shall not exceed 40 feet above the average tree canopy height.

6.2 Height, Side- and Roof-Mounted Facilities. Side and roof-mounted personal wireless service facilities shall not project more than ten (10) feet above the height of an existing building to which it is attached nor project more than ten feet above the height limit of the zoning district within which the facility is located. Personal wireless service facilities may locate on a building that is legally non-conforming with respect to height, provided that the facilities do not project above the existing building height.

6.3 Height, Existing Structures. New antennas located on any of the following structures existing on the effective date of this Ordinance shall be exempt from the height restrictions of this Ordinance provided that there is no increase in height of the existing structure as a result of the installation of a personal wireless service facility: water towers, guyed towers, lattice tower and monopoles.

6.4 Height, Existing Structures (Utility). New antennas located on any of the following existing structures shall be exempt from the height restrictions of this Ordinance provided that there is no more than a ten foot (10') increase in the height of the existing structure as a result of the installation of a personal wireless service facility: electric transmission and distribution towers, telephone poles and similar existing utility structures.

6.5 Setbacks. All personal wireless service facilities and their equipment shelters shall comply with the building setback provisions of the zoning district in which the facility is located. In addition, the following setbacks shall be observed:

6.5.1 In order to ensure public safety, the minimum distance from the base of any ground-mounted personal wireless facility to any property line, road, habitable dwelling, business or institutional use, or public recreational area shall be the height of the facility/mount, including any antennas or other appurtenances, plus the required building setback for the zoning district. This setback is considered a "fall zone".

6.5.2 In the event that an existing structure is proposed as a mount for the personal wireless service facility, a fall zone shall not be required, but the setback provisions of the zoning district shall apply. In the case of pre-existing non-conforming structures, personal wireless service facilities and their equipment shelters shall not increase any non-conformities, except as provided below.

6.6 Flexibility. In reviewing the Site Plan application for a personal wireless service facility, the Planning Board may reduce the required fall zone and/or setback distance of the zoning district by as much as 50% of the required distance, if it finds that a substantially better design will result from such reduction. In making such a finding, the Planning Board shall consider both the visual and safety impacts of the proposed use.

7.0 Special Exception and Site Plan Approval Regulations. All personal wireless service facilities shall comply with the Performance Standards set forth in this section.

7.1 Design Standards

7.1.2 Visibility/Camouflage. Personal wireless service facilities shall be camouflaged as follows:

a. Camouflage by Existing Buildings or Structures:

1. When a personal wireless service facility extends above the roof height of a building on which it is mounted, the facility shall be concealed within or behind existing architectural features to limit its visibility from public ways. Facilities mounted, shall blend with the existing building's architecture and, if over 5 square feet, shall be painted or shielded with material which is consistent with the design features and material of the building.

2. Personal wireless service facilities, which are side mounted, shall blend with the existing building's architecture and, if over 5 square feet, shall be painted or shielded with material which is consistent with the design features and materials of the building.

b. Camouflage by Vegetation. If personal wireless service facilities are not camouflaged from public viewing areas by existing buildings or structures, they shall be surrounded by buffers of dense tree growth and under story vegetation in all directions for a minimum distance of one hundred fifty (150) feet from the mount, security barrier, or designated clear area for access to equipment, and screen views of the facility in all directions to create an effective year-round visual buffer. Ground-mounted personal wireless service facilities shall provide a vegetated buffer or sufficient height and depth to effectively screen the facility or the proposed facility. The applicant shall submit the types of trees and plant materials for approval of the Planning Board and depth of the needed buffer on site. Existing tree growth and natural landforms on the site shall be preserved to the maximum extent possible. The one hundred fifty (150) foot vegetative buffer area shall be protected by a landscape easement or be within the area of the carrier's lease. The easement or lease shall specify that the trees within the buffer shall not be removed or topped unless the trees area dead or dying and present a hazard to persons or property.

c. Camouflage by Man-made Treatment. In instances where vegetation treatments may not be sufficient to adequately buffer the visual effect of new personal wireless service facilities, the Planning Board may require innovative treatments or design, including but not limited to imitation of native vegetation.

d. Color: Personal wireless service facilities, which are side or roof-mounted on structures or buildings, shall be painted or constructed of materials to match or blend with the color of the building material that provides the backdrop to the facility. To the extent that any personal wireless service facilities extend above the height of the vegetation immediately surrounding it, they shall be of a neutral, non-reflective color or colors, which blend with the sky and clouds.

7.2 Equipment Shelters: Equipment shelters for personal wireless service facilities shall be designed consistent with one of the following design standards:

7.2.1 Equipment shelters shall be located in underground vaults; or

7.2.2 Equipment shelters shall be camouflaged behind an effective year-round landscape buffer, equal to the height of the proposed building, and/or wooden fence. The Planning Board may determine the style of fencing and/or landscape buffer that is most compatible with the surrounding area.

7.2.3 If mounted on a rooftop, the equipment shelter shall be concealed or camouflaged so that the shelter either is not visible at grade or appears to be part of the original structure.

7.3 Lighting and Signage.

7.3.1 Personal wireless service facilities shall be lighted only if required by the Federal Aviation Administration (FAA). Lighting of equipment structures and any other facilities shall be shielded from abutting properties and shall be installed in a way to minimize light pollution.

7.3.2 Signs shall be limited to those needed to identify the property and the owner and warm of any danger. All signs shall comply with the requirements of the Town's sign ordinance.

7.4 Security All ground mounted personal wireless service facilities shall be surrounded by a security barrier. Keys or means of access will be provided to Emergency Services (Police and Fire Departments.)

7.5 Historic Buildings

7.5.1 Any personal wireless service facilities located on or within an historic structure shall not alter the character-defining features, distinctive constructive methods, or original historic materials of the building.

7.5.2 Any alteration made to an historic structure to accommodate a personal wireless service facility shall be fully reversible.

7.6 Scenic Landscapes and Vistas

7.6.1 All attempts should be made to not locate personal wireless service facilities within open areas that are visible from public roads, recreational areas, residential development, or within 1,000 feet of great ponds and lakes (as defined by NHDES). As required in the Camouflage section above, all ground-mounted personal wireless service facilities which are not camouflaged by existing buildings or structures, shall be surrounded by a buffer of dense tree growth.

7.6.2 Existing entrances and driveways to serve a personal wireless service facility shall be utilized unless the applicant can demonstrate that a new entrance and driveway will result in less visual, traffic and environmental impact. New driveways to serve a personal wireless service facility shall not exceed twelve (12) feet in width.

7.6.3 Any antenna array placed upon an existing or proposed ground mount, utility pole or transmission line mount shall have a diameter of no more than four (4) feet, exclusive of the diameter of the mount. A larger diameter array may be permitted after a finding by the Planning Board that the visual impacts of a larger array are negligible.

8.0 Environmental Hazards. Personal wireless service facilities shall not be located in wetlands. Locating wireless facilities in wetland buffer areas shall be avoided whenever possible and disturbance to wetland buffer areas shall be minimized. Specific natural resource characteristics may be present throughout the Town of Bridgewater that are fundamentally incompatible with new tower construction.

Personal wireless service facilities shall be located and designed so as to avoid or mitigate impacts to these natural resources.

8.1 No hazardous waste shall be discharged on the site of any personal wireless service facility. If any hazardous materials are to be used on site, there shall be provisions for full containment of such materials. An enclosed containment area shall be provided with a sealed floor, designed to contain at least 110% of the volume of the hazardous materials stored or used on the site.

8.2 Storm water run-off shall be contained on site.

8.3 Ground-mounted equipment for personal wireless service facilities shall not generate noise in excess of 50 db at the property line.

8.4 Roof-mounted equipment for personal wireless service facilities shall not generate noise in excess of 50 db at ground level at the base of the building closest to the antenna.

9.0 Safety Standards, Radio Frequency Radiation (RFR) Standards. All equipment proposed for a personal wireless service facility shall be authorized per the FCC Guidelines for Evaluating the Environmental Effects of Radio Frequency Radiation (FCC Guidelines), as amended.

10.0 Application Procedures

10.1 Pre-Application Conference. Prior to the submission of an application for Site Plan Approval under this regulation, the applicant is encouraged to meet with the Planning Board at a public meeting to discuss the proposed personal wireless service facility in general terms and to clarify the filing requirements. The Planning Board shall meet with an applicant under this ordinance within thirty-five (35) days following a written request submitted to the Town Office.

10.2 Pre-Application Filing Requirements. The purpose of the conference is to inform the Planning Board as to the preliminary nature of the proposed personal wireless service facility. As such, no formal filings are required for the pre-application conference. However, the applicant is encouraged to prepare sufficient preliminary architectural and/or engineering drawings to inform the Planning Board of the location of the proposed facility, as well as its scale and overall design.

10.3 Application Filing Requirements.

10.4 General Filing Requirements

10.4.1 Name, address and telephone number of applicant and any co-applicants as well as any agents for the applicant or co-applicants.

10.4.2 Co-applicants may include the landowner of the subject property, licensed carrier and tenants for the personal wireless service facility.

10.4.3 A licensed carrier shall either be an applicant or co-applicant.

10.4.4 Original signatures for the applicant and all co-applicants applying for the Site Plan Approval. If the applicant or co-applicant will be represented by an agent, an original signature authorizing the agent to represent the applicant and/or co-applicant is required. Photo-reproductions of signatures will not be accepted.

10.5 Location Filing Requirements

10.5.1 Identify the subject property by including the name of the nearest road or roads, and street address, if any.

10.5.2 Tax map and parcel number of subject property,

10.5.3 Zoning district designation for the subject parcel,

10.5.4 A plat to scale showing the lot lines of the subject property and all properties within 300 feet and the location of all buildings, including accessory structures, on all properties shown,

10.5.5 A town-wide map showing the other existing personal wireless service facilities in the Town and outside the Town within twenty miles of its corporate limits, and

10.5.6 The proposed locations of all existing and future personal wireless service facilities in the Town and within a twenty-mile radius of its corporate limits on a Town-wide map for this carrier.

10.6 Site Filing Requirements.

10.6.1 No smaller than one-inch-equals-40-feet vicinity plan showing the following:

a. Property lines for the subject property.
b. Property lines for all properties adjacent to the subject property within 300 feet.
c. Tree cover on the subject property and adjacent properties within 300 feet by dominant species and average height, as measured by using standard forestry procedures.
d. Outline of all existing buildings, including purpose (e.g. residential buildings, garages, accessory structures, etc.) on subject property and all adjacent properties within 300 feet.
e. Proposed location of antenna, mount and equipment shelter(s).
f. Proposed security barrier, including type and extent as well as point of controlled entry.
g. Location of all roads, public and private, on the subject property and on all adjacent properties within 300 feet including driveways proposed to serve the personal wireless service facility.
h. Distances, at grade, from the proposed personal wireless service facility to each building on the vicinity plan.
i. Contours at each ten-foot AMSL for the subject property and adjacent properties within 300 feet.
j. All proposed changes to the existing property, including grading, vegetation removal and temporary or permanent roads and driveways.
k. Representations, dimensioned and to scale, of the proposed mount, antennas, equipment shelters, cable runs, parking areas and any other construction or development attendant to the personal wireless service facility.
l. Lines representing the sight line showing viewpoint (point from which view is taken) and visible point (point being viewed) from “Sight Lines” sub-section below.
m. Sight lines and photographs as described below:
n. Sight line representation. A sight line representation shall be drawn from any public road within 300 feet and the closest façade of each residential building (viewpoint) within 300 feet to the highest point (visible point) of the personal wireless service facility. Each sight line shall be depicted in profile, drawn no smaller than one-inch equals 40 feet. The profiles shall show all intervening trees and buildings. In the event there is only one residential building within 300 feet there shall be at least two sight lines from the closest habitable structures or public roads, if any.
o. Existing (before condition) photographs. Each site line shall be illustrated by one four inch by six-inch color photograph of what can currently be seen from any public road within 300 feet.

p. Proposed (after condition). Each of the existing condition photographs shall have the proposed personal wireless service facility superimposed on it to show what will be seen from public roads if the proposed personal wireless service facility is built.

q. Siting elevations, or views at-grade from the north, south, east and west for a 50-foot radius around the proposed personal wireless service facility plus from all existing public and private roads that serve the subject property. Elevations shall be at either one-quarter inch equals one foot or one-eighth inch equals one foot scale and show the following:

r. Antennas, mounts and equipment shelter(s), with total elevation dimensions and AGL of the highest point.

s. Security barrier. If the security barrier will block views of the personal wireless service facility, the barrier drawing shall be cut away to show the view behind the barrier.

t. Any and all structures on the subject property.

u. Existing trees and shrubs at current height and proposed trees and shrubs at proposed height at time of installation, with approximate elevations dimensioned.

v. Grade changes, or cuts and fills, to be shown as original grade and new grade line, with two-foot contours above mean sea level.

10.6.2 Design Filing Requirements

a. Equipment brochures for the proposed personal wireless service facility such as manufacturer's specifications or trade journal reprints shall be provided for the antennas, mounts, equipment shelters, cables as well as cable runs, and security barrier, if any.

b. Materials of the proposed personal wireless service facility specified by generic type and specific treatment (e.g., anodized aluminum, stained wood, painted fiberglass, etc.). These shall be provided for the antennas, mounts, equipment shelters, cables as well as cable runs, and security barrier, if any.

c. Colors of the proposed personal wireless service facility represented by a color board showing actual colors proposed. Colors shall be provided for the antennas, mounts, equipment shelters, cable as well as cable runs, and security barrier, if any.

d. Dimensions of the personal wireless service facility specified for all three directions: height, width and breadth. These shall be provided for the antennas, mounts, equipment shelters and security barriers, if any.

e. Appearance shown by at least two photographic superimpositions of the personal wireless service facility within the subject property. The photographic superimpositions shall be provided for the antennas, mounts, equipment shelters, cables as well as cable runs, and security barrier, if any, for the total height, width and breadth. Landscape plan including existing trees and shrubs and those proposed to be added, identified by size of specimen at installation and species.

f. Within 35 days of the pre-application conference, the applicant shall arrange for a balloon or crane test at the proposed site to illustrate the height of the proposed facility. The date, time and location of such test shall be advertised in a newspaper of general circulation in the Town at least 10 days, but not more than 21 days prior to the test. In addition, notice shall be posted at the Bridgewater Town Library and the Bridgewater Town Hall. An alternate date shall be included in the event of weather delay.

g. If lighting of the site is proposed, the applicant shall submit a manufacturer's computer-generated point to point printout, indicating the horizontal foot-candle levels at grade, within the property to be developed and twenty-five (25) feet beyond the property lines. The printout shall indicate the locations and types of luminaries proposed.

10.6.3 Noise Filing Requirements. The applicant shall provide a statement listing the existing and maximum future projected measurements of noise from the proposed personal wireless service facilities, measured in decibels LDN (logarithmic scale, accounting for greater sensitivity at night), for the following

a. Existing, or ambient: the measurements of existing noise.
b. Existing plus proposed personal wireless service facilities: maximum estimate of noise from the proposed personal wireless service facility plus the existing noise environment. Such statement shall be certified and signed by an acoustical engineer, stating the noise measurements are accurate and meet the Noise Standards of this Ordinance.

10.6.4 Radio Frequency Radiation (RFR) Filing Requirements. The applicant shall provide a Certification, signed by a RF engineer, stating that RFR measurements are accurate and meet FCC Guidelines as specified in the Radio Frequency Radiation Standards sub-section of this Ordinance.

10.6.5 Federal Environmental Filing Requirements.

a. The National Environmental Policy Act (NEPA) applies to all applications for personal wireless service facilities. NEPA is administered by the FCC via procedures adopted as Subpart 1, Section 1.1301 et seq. (47 CRF Ch. I). The FCC requires that an environmental assessment (EA) be filed with the FCC prior to beginning operations for any personal wireless service facility proposed in or involving any of the following:
   - Wilderness areas,
   - Wildlife preserves,
   - Endangered species habitat,
   - Historical site,
   - Indian religious site,
   - Flood Plain,
   - Wetlands,
   - High intensity white lights in residential neighborhoods,
   - Excessive radio frequency radiation exposure.
b. At the time of application filing, an EA that meets FCC requirements shall be submitted to the Town for each personal wireless service facility site that requires such an EA to be submitted to the FCC.
c. The applicant shall list location, type and amount (including trace elements) of any materials proposed for use within the personal wireless service facility that are considered hazardous by the federal, state or local government.

10.6.6 The Planning Board may waive one or more of the application filing requirements of this section if it finds that such information is not needed for a thorough review of a proposed personal wireless service facility.

11.0 Co-location. Licensed carriers shall share personal wireless service facilities and sites where feasible and appropriate, thereby reducing the number of personal wireless facilities that are stand-alone facilities. All applications for Site Plan Approval for a personal wireless service shall demonstrate a good faith effort to co-locate with other carriers. Such good faith includes:

11.1 A survey of all existing structures that may be feasible sites for co-locating personal wireless service facilities;

11.2 Contact with all the other licensed carriers for commercial mobile radio services operating in the Municipalities within twenty miles of Bridgewater; and

11.3 Sharing information necessary to determine if co-location is feasible under the design configuration most accommodating to co-location.

11.4 In the event that a co-location is found to be not feasible, a written statement of the reasons for the infeasibility shall be submitted to the Town. The Town may retain a technical expert in the field of RF engineering to verity if a co-location at the site is not feasible or is feasible given the design configuration most accommodating to co-location. The cost for such technical expertise will be at the expense of the applicant.

11.5 If the applicant does intent to co-locate or to permit co-location, drawings and studies which show the ultimate appearance and operation of the personal wireless service facility at full build-out shall be provided.

11.6 If the Planning Board approves co-location for a personal wireless service facility site, the Site Plan Approval shall indicate how many facilities of what type shall be permitted on that site. Facilities specified in the Site Plan Approval shall require no further approvals. However, the addition of any facilities not specified in the Site Plan Approval shall require a new Site Plan Approval.

12.0 Modifications. A modification of a personal wireless service facility may be considered equivalent to an application for a new personal wireless service facility when the following circumstances apply:

12.1 The applicant and/or co-applicant wants to alter or change the personal wireless service facility in one or more of the following ways:

12.1.1 Change in the number of personal wireless service facilities permitted on the site;

12.1.2 Change in technology used for the personal wireless service facility.

12.2 The applicant and/or co-applicant want to add any equipment or additional height not specified in the original design filing.

13.0 Monitoring and Maintenance.

13.1 After the personal wireless service facility is operational, the applicant shall submit, within 90 days of beginning operations, and at annual intervals from the date of issuance of the Special Exception and Site Plan Approval, existing measurements of RFR from the personal wireless service facility. Such measurements shall be signed and certified by an RF engineer, stating that RFR measurements are accurate and meet FCC Guidelines as specified in the Radio Frequency Standards section of this Ordinance.

13.2 After the personal wireless service facility is operational, the applicant shall submit, within 90 days of beginning operations existing measurements of noise from the personal wireless service facility. Such measurements shall be signed by an acoustical engineer, stating that noise measurements are accurate and meet the Noise Standards sub-section of this Ordinance.

13.3 The applicant and co-applicant shall maintain the personal wireless service facility in good condition. Such maintenance shall include, but shall not be limited to, painting, structural integrity of the mount and security barrier, and maintenance of the buffer areas and landscaping.

13.4 All towers must meet or exceed current standards and regulations of the FAA, FCC and any other agency of the state or federal government with the authority to regulate towers and antennas. If such standards and regulations are changed, the owners of the towers and antennas governed by this Ordinance shall bring such towers and antennas into compliance with such revised standards and regulations within six (6) months of the effective date of such standards and regulations, unless the controlling authority mandates more stringent compliance. Failure to bring towers and antennas into compliance with such revised standards and regulations shall constitute grounds for removal, in accordance with this Ordinance, of the tower and/or antenna, at the owner's expense through the execution of the posted security.

13.5 Security for Removal. The Town shall determine the form and amount of security that represents the cost of removal and disposal of abandoned facilities in the event that a facility is abandoned and the facility owner is unwilling or unable to remove the facility. The amount of the security shall be based upon the removal cost plus fifteen percent (15%), provided by the applicant and certified by a professional structural engineer licensed in New Hampshire. The owner of the facility shall provide the Planning Board with a revised removal cost estimate and structural evaluation provided by a professional structural engineer licensed in New Hampshire every five (5) years from the date of the Zoning Board of Adjustment and Planning Board's approval of the site plan. If the cost has increased more than fifteen percent (15%), then the owner of the facility shall provide additional security in the amount of the increase. In any event the owner of the personal wireless service facility shall be required to notify the Town of Bridgewater no less than ninety (90) days prior to the expiration of the security instrument in order to extend said security.

14.0 Abandonment or Discontinuation of Use.

14.1 At such time that a licensed carrier plans to abandon to discontinue operation of a personal wireless service facility, such carrier will notify the Town by certified US mail of the proposed date of abandonment or discontinuation of operations. Such notice shall be given no less than 30 days prior to abandonment or discontinuation of operations. In the event that a licensed carrier fails to give such notice, the personal wireless service facility shall be considered abandoned upon such discontinuation of operations.

14.2 Upon abandonment or discontinuation of use, the carrier shall physically remove the personal wireless service facility within 90 days from the date of abandonment or discontinuation of use. "Physically remove" shall include, but not be limited to:

14.2.1 Removal of antennas, mount, equipment shelters and security barriers from the subject property.

14.2.2 Proper disposal of the waste materials from the site in accordance with local and state solid waste disposal regulations.

14.2.3 Restoring the location of the personal wireless service facility to its natural condition, except that any landscaping and grading shall remain in the after-condition.

14.3 If the owner of a personal wireless service facility fails to remove the facility within 90 days from the date of abandonment or discontinuation of use, then the Board of Selectmen shall, after holding a public hearing with notice to the owner and abutters, issue a declaration of abandonment. The carrier and owner shall be subject to the civil penalty provided under RSA 676:17.

G. SEXUALLY ORIENTED BUSINESS ORDINANCE

SECTION 1 – AUTHORITY

Pursuant to the authority conferred by chapter 674:16 of the New Hampshire Revised Statutes, the Town of Bridgewater adopts the following ordinance regulating sexually oriented Businesses. This ordinance shall be considered part of the Zoning Ordinance for the purposes of administration and appeals under state law. If any provision of this ordinance differs or appears to conflict with any provision of the Zoning Ordinance or other ordinance or regulation, the provision imposing the greater restriction or more stringent standard shall be controlling.

SECTION 2 – PURPOSE

It is the purpose of this ordinance to regulate sexually oriented business and related activities to promote the health, safety, morals, and general welfare of the citizens of the Town, and to establish reasonable and uniform regulations to prevent the deleterious location and concentration of sexually oriented businesses within the Town. The provisions of this Article have neither the purpose nor effect of imposing a limitation or restriction on the content of any communicative materials, including sexually oriented materials. Similarly, it is neither the intent nor effect of the ordinance to restrict or deny access by adults to sexually oriented materials protected by the First Amendment, or to deny access by the distributors and exhibitors of sexually oriented entertainment to their intended market. Neither is it the intent nor effect of this ordinance to condone or legitimize the distribution of obscene materials.

SECTION 3 – DEFINITIONS

Pursuant to this ordinance, the following definitions shall apply to sexually oriented businesses.

Adult Arcade -- means any place to which the public is permitted or invited wherein coin operated or slug-operated or electronically, electrically, or mechanically controlled still or motion picture machines, projectors, or other image-producing devices are maintained to show images to five or fewer persons per machine at any one time, and where the images so displayed are distinguished or characterized by the depicting or describing of "specified sexual activities" or "specified anatomical areas."

Adult Bookstore or Adult Video Store-- means a business that devotes more than 15 % of the total display, shelf rack, table, stand or floor area for the display, sale or rental of the following:

1. Books, magazines, periodicals, or other printed matter, or photographs, films, motion pictures, video cassettes, slides, tapes, records, computer disks, CD-ROM's or other forms of visual or audio representations which meet the definition of "harmful to minors" and/or "sexual conduct"; or instruments, devices, or paraphernalia, which are designed for use in connection with "sexual conduct" as defined by NH RSA 571-B:1, other than birth control devices.

2. A commercial establishment may have other principal business purposes that do not involve the offering for sale or rental of material depicting or describing "specified sexual activities" or "specified anatomical areas" and still be categorized as Adult Bookstore or Adult Video Store. Such other business purposes will not serve to exempt such commercial establishment from being categorized as an Adult Bookstore or Adult Video Store so long as one of its principal business purposes is the offering for sale or rental for consideration the specified materials which depict or describe "specific sexual activities" or "specified anatomical areas" as defined by NH RSA 571-B:1.

Adult Cabaret - means a nightclub, bar, restaurant, or similar commercial establishment which regularly features:

1. Persons who appear in a State of Nudity or Semi-Nudity; or

2. Live performances which are characterized by the exposure of "specified anatomical areas" or by "specified sexual activities" or;

3. Films, motion pictures, video cassettes, slides, or other photographic reproductions which are characterized by the depiction or description of "specified sexual activities" or "specified anatomical area".

Adult Material --means any one or more of the following regardless of whether new or used:

1. Books, magazines, periodicals, or other printed matter, or photographs, films, motion pictures, video cassettes, slides, tapes, records, CD-ROMs or other forms of visual or audio representations which have as their primary or dominant theme subject matter depicting, exhibiting, illustrating, describing or relating to "sexual conduct" as defined by NH RSA 571-B:1 or specified anatomical areas; or

2. Instruments, devices or paraphernalia which are designed for use in connection with "sexual conduct", as defined by NH RSA 571-B:1, other than birth control devices.

Adult Theater - means a theater, concert hall, auditorium or similar commercial establishment, either indoors or outdoors in nature, which regularly features the presentation of motion pictures, films, theatrical productions, and other forms of visual production, by persons who appear in a state of nudity or semi-nudity or live performances which are characterized by the exposure of "specified sexual anatomical areas" or by "specified sexual activities" which meets the definition of "harmful to minors" and/or "sexual conduct" as set forth in NH RSA 571-B:1.

Establishment - means and includes any of the following:

1. The opening or commencement of any sexually oriented business as a new business;

2. The conversion of an existing business whether or not a sexually oriented business, to any sexually oriented business;

3. The additions of any sexually oriented business to any other existing sexually oriented business; or

4. The relocation of any sexually oriented business.

Harmful to Minors --As defined in NH RSA 571-B:1, as may be amended.

Nudity or a State of Nudity - means the appearance of a human bare buttock, anus, male genitals, female genitals, or full female breasts.

Person - means an individual, proprietorship, partnership, corporation, association. or other legal entity.

Semi-Nude - means a state of dress in which clothing is specifically designed to cover no more than the genitals, pubic region, and areola of the female breast, as well as portions of the body covered by supporting straps or devices.

Sexual Conduct- As defined in NH RSA 571-B:1, as may be amended.

Sexual Encounter Center - means a business or commercial enterprise that, as one of its primary business purposes, offers for any form of consideration:

1. Physical contact in the form of wrestling or tumbling between persons of the opposite sex or;

2. Activities between two or more people when one or more of the persons is in a state of nudity or semi-nude.

Sexually Explicit Material- see definition for - Adult Material.

Sexually Oriented Business - means an Adult Arcade, Adult Bookstore or Adult Video Store, Adult Cabaret, Adult Theater, or Sexual Encounter Center.

Specified Anatomical Areas - means any part of the male or female genitals.

Specified Sexual Activities- means and includes any of the following;

1. The fondling or other touching of human genitals, pubic region, buttocks, anus, or female breasts;

2. Sex acts, normal or perverted**,** actual or simulated, including intercourse, oral copulation, or sodomy;

3. Masturbation, actual or simulated; or

4. Excretory functions as part of or in connection with any of the activities set forth in 1 through 3 above.

Transfer of Ownership or Control - of a sexually oriented business means and includes any of the following:

1. The sale, lease, or sublease of the business;

2. The transfer of securities which constitute a controlling interest in the business, whether by sale, exchange, or similar means; or

3. The establishment of a trust, gift, or other similar legal device which transfers the ownership or control of the business, except for transfer by bequest or other operation of law upon the death of the person possessing the ownership or control.

SECTION 4- ALLOWED DISTRICT

A sexually oriented business may be allowed in the Commercial/Industrial District, as a Special Exception provided that it is otherwise lawful and meets all other zoning requirements. For existing businesses in any district which sells sexually explicit goods, paraphernalia or adult materials, but does not meet the 15% threshold outlined in Section 3, such goods and paraphernalia shall be located either behind a counter or in a separate room or enclosure where citizens under the age of 18 are not allowed to enter. Such sexually explicit goods and paraphernalia must be located so that the materials in question are not within view of minors.

SECTION 5- SPECIAL EXCEPTION

A sexually oriented business use may be allowed by the Zoning Board of Adjustment as a Special Exception, subject to the following conditions:

1. After a review of the plans showing the location, layout, a scale drawing and location of any signs and utilities, the board, in its judgment, must find that the use will not create excessive traffic congestion, noise, or odors, nor tend to reduce the value of surrounding property, has adequate sewage and water facilities and sufficient off-street parking and will preserve the attractiveness of the town.

2. No sexually oriented business use shall be located within 1,000 feet from any property line of the following:

a) A public, religious or private nursery school, kindergarten school, elementary school, middle school, junior high school, high school or similar educational facility.

b) Licensed Child Day Care Facility.

c) A public park, public recreational field or any publicly owned property or facility.

d) A religious institution or place of worship.

e) Any existing residential dwelling.

3. The proposed site may be required to be screened in such a manner that limits pedestrian and vehicular access to adjacent properties, but which does not restrict adequate lines of sight or create unsafe site conditions. This visual barrier shall be maintained by the owner of the property.

4. There shall be a minimum of 1,000 feet between any two sexual oriented businesses.

5. There shall be sufficient parking as established by local and state fire, building, or health codes, whichever is greater.

6. The site shall be maintained daily in a condition that is free and clear of any sexual paraphernalia or packaging.

7. Signs shall not visually depict any person in a "State of Nudity" or "Semi-Nude", and no sexually explicit material or advertising shall be visible from outside the building.

SECTION 6 -- SAVINGS CLAUSE

The invalidity of any provision of this ordinance shall not affect the validity of any other provision of this ordinance.

H. BOX STORAGE REGULATIONS

SECTION 1 – DEFINITION: Bridgewater definition of Box Storage Units: "Any trailer or similar container without motive power designed for carrying property wholly in its own structure and for being drawn by or placed upon some mode of transportation, including so-called "Sea Boxes" and the like".

SECTION 2 – USES AND STRUCTURES:

A. Commercial & Commercial/Industrial Zones: Box Storage units and other storage structures such as tent sales, temporary greenhouses, trailer storage and box trailer sales (whether such trailers are registered or unregistered), which are accessory to the principal use of a lot, may be permitted for not more than 60 days per year except by special exception and site plan review.

B. All Other Zones: Box storage units and other storage structures such as tent sales, temporary greenhouses, trailer storage and box trailer sales (whether such trailers are registered or unregistered), which are accessory to the principal use of a lot, are not allowed in all other zones in Bridgewater except by special exception.

C. Construction Site Usage: Temporary permit may be authorized for the duration of the construction project as part of the building permit.

Emergency Situations: In certain emergency situations such as fire, flood or other natural disaster that causes structural damage on a resident's property, box trailer storage may be immediately allowed for temporary use under the following conditions:

1. Resident must contact and obtain approval from a town selectman for a 60-day permit.
2. Resident must come before the Zoning Board of Adjustment to request a special exception of up to a year, if the time is to exceed 60 days.

SECTION 3 – CRITERIA:

A. Box Storage Units and Other Storage Structures Must Meet the Following Criteria:

1. The use of trailers shall be accessory to the principal use of the lot.
2. Trailers shall be set on inflated tires (except sea boxes and the like).
3. The exterior of trailers shall be well maintained and free of rust.
4. Trailers shall not be used for advertising purposes.
5. Trailers shall not be lighted.
6. Trailers shall not be used to store hazardous and/or flammable liquids, materials, products or wastes, including but not limited to petroleum.

B. Location of Trailers. Box trailers shall not occupy required parking spaces or areas necessary for traffic flow, safety or landscaping requirements.

C. Density.

1. No more than 10 percent of the lot area may be occupied by trailers.
2. No more than six (6) trailers shall be permitted on a lot or business premises.

D. Converted Motor Vehicles. The conversion of buses, motor homes, recreational vehicles and other motor vehicles for storage use or other temporary use is prohibited.

I. RESIDENTIAL SMALL WIND TURBINE ORDINANCE

SECTION 1 – PURPOSE:

It is the purpose of this ordinance to regulate the safe, effective and efficient use of small wind energy systems to reduce the on-site consumption of utility supplied electricity. We realize that Bridgewater, New Hampshire residents value the natural beauty of our area so we have tried to balance this value with the fact that wind power is an important and inevitable part of our future.

SECTION 2 – FINDINGS

Bridgewater, New Hampshire finds that wind energy is an abundant, renewable, and nonpolluting energy resource and that its conversion to electricity will reduce our dependence on nonrenewable energy resources and decrease the air and water pollution that results from the use of conventional energy sources. Therefore, we find that it is necessary to create proper guidelines and permits for small wind energy systems so that this clean, renewable energy resource can be utilized in a cost-effective and timely manner and to minimize impact on the surrounding abutters and neighbors.

SECTION 3 – DEFINITIONS

Small Wind Energy Systems: A residential wind energy conversation system consisting of a wind turbine, a tower, and supporting structures (e.g. guy wires, if needed), and associated control or conversion electronics, which has a rated capacity of not more than 100 kw and which is intended to primarily reduced on-site consumption of utility power.

Tower Height: The height above grade of the fixed portion of the tower, excluding the wind turbine itself.

SECTION 4 – PERMITTED USE

Small wind energy systems shall be a permitted use in all zoning classifications; subject to certain requirements as set forth below:

Tower Height: Wind turbines shall be limited to 100 ft above the tower base or 35 feet above the average surrounding tree canopy, whichever is greater.

Set-back and Location: No part of the wind system structure, excluding guy wire anchors, may extend closer than 2 times the tower height to an abutters property boundary. If the property has multiple wind energy system sites that generate the same amount of wind power, the wind turbine must be placed on the area that has the least visual and noise impact to abutters and neighbors. Multiple wind turbines are not permitted on a property.

Noise: Noise from small wind energy systems shall not exceed (60 dBA), as measured at the closest neighboring inhabited dwelling. The level, however, may be exceeded during short-term events such as utility outages and/or severe wind storms.

Aesthetics: The wind turbine shall have as little adverse impact on abutters and neighbors as possible. The color must be non-reflective and neutral. Tower construction must be of monopole design or of the most non-visible construction available.

Compliance and Site Plan Review: Small wind energy systems must go through an abbreviated site plan re view process. This includes notifying abutters, a property drawing to scale, and to-scale drawings of the wind turbine structure, including the tower, base, footings, guy wire and anchor systems. An engineering analysis of the tower showing compliance with the Uniform Building Code and certified by a licensed professional engineering shall also be submitted. This analysis is frequently supplied by the manufacturer.

Compliance with National Electric Code: Building permit applications for small wind energy systems shall be accompanied by a line drawing of the electrical components in sufficient detail to allow for a determination that the manner of installation conforms to the National Electrical Code. This information is frequently supplied by the manufacturer.

Utility Notification: No small wind energy system shall be installed until evidence has been given that the utility company has been informed of the customer's intent to install an interconnected customer-owned generator. Off-grid systems shall be exempt from this requirement.

Decommissioning: If the wind turbine is not in use for a period of 1 year it must be disassembled by the property owner unless a specific and time-bound extension is provided by the selectmen. The wind turbine shall be maintained in good condition and good repair at all times. Any structure that is or becomes in disrepair such that it does not meet its intended usage in the opinion of the selectmen must be repaired within 45 days. If the owner fails to comply, the selectmen shall have the tower removed at the owners' expense, including all legal fees.

ARTICLE VI: NON-CONFORMING USES

All non-conforming properties in active use when this Ordinance is passed and adopted may continue in their present use.

If a use is discontinued or abandoned for one year, it shall thereafter conform to the regulations for the district and the non-conforming use may not thereafter be resumed without approval of the Board of Adjustment.

Any and all non-conforming property may be altered and expanded as the business and conditions warrant, providing, however, that any such expansion does not make any existing non-conforming structure a more non-conforming structure within the terms of this Ordinance and that all other standards of this Ordinance are met.

Non-conforming buildings which are destroyed by fire or other natural disaster may be rebuilt or replaced if the degree of non-conformity is not increased.

ARTICLE VII: BOARD OF ADJUSTMENT

A. CREATION, APPOINTMENT AND JURISDICTION

Within thirty (30) days after the adoption of this Ordinance and thereafter, as terms expire or vacancies occur, the Board of Selectmen shall appoint a Board of Adjustment consisting of five (5) members whose duties, terms and powers shall conform to the provisions of Chapter 31, Sections 66-89, N.H. Revised Statutes Annotated, 1955, as amended. Thereafter, as terms expire or vacancies occur, the appointing authority shall be responsible for filling vacancies and maintaining full membership of the Board of Adjustment.

B. SPECIAL EXCEPTIONS

The Board of Adjustment may, in appropriate cases and subject to appropriate conditions and safeguards, grant a permit for special exception.

Before granting a permit, the Board shall determine that all the provisions set forth in Article V are met and shall hold an abutter hearing to hear any valid objection based on demonstrable fact. The Board, in acting on an application for a special exception, shall take into consideration, but not be limited to, the following conditions:

1. The specific site is an appropriate location for such use.

2. The property values in the district will not be reduced by such a use.

3. There will be no nuisance or serious hazard to vehicles or pedestrians.

4. Adequate and appropriate facilities will be provided for the proper operation of the proposed use.

5. The proposed use shall comply with the minimum land space requirements set forth for each District, and as set forth in the General and Special provisions of the Ordinance.

6. The capacity of existing roads and highways to carry additional traffic.
The Board of Adjustment may impose additional special standards in granting a special exception where deemed necessary to protect the best interests of the surrounding property, the neighborhood, or the Town as a whole. These standards may include:

1. Increasing the required lot size or yard dimensions in order to protect the adjacent properties.

2. Limiting the lot coverage or height of buildings because of obstruction to view and reduction of sunlight and air to adjacent properties.

3. Controlling the location and number of vehicular access points to the property.

4. Limiting the number, location and size of signs on site.

5. Requiring suitable on-site landscaping and screening where necessary to reduce noise and glare and to maintain the property in character and keeping with the surrounding area.

6. Providing for specific layout of facilities on the property such as location of the building so as to minimize effect on adjoining property.

7. The owner of a lot which lies more than one zone may approach the Zoning Board of Adjustment for a special exception which would extend a use characteristics of one zone to another portion of that lot. Such a change requires a subsequent Site Plan Review for the entire parcel.

C. VARIANCES

1. The Board of Adjustment may, on an appeal, grant a variance from the provisions of this Ordinance only where the Board finds that all the following conditions apply:

a. There are special circumstances or conditions applying to the lot or structure for which the variance is sought (such as, but not limited to, the exceptional narrowness, shallowness, or shape of the lot or structure in question, or exceptional topographical conditions), which are peculiar to such lot or structure, and the application of the requirements of this Ordinance will deprive an owner of such lot or structure a reasonable use of it, and will impose upon such owner a hardship not shared by the owners of other lots or structures in the same district. (Financial hardship does not constitute "hardship" in this case.)

b. The specific variance if granted represents the minimum variance that will afford reasonable relief to the owner and is necessary for a reasonable use of the lot or structure.

c. The granting of the variance will be in harmony with the general purposes and intent of this Ordinance, and with the convenience, welfare, and character of the district within which it is proposed, and will not be injurious or otherwise detrimental to the public welfare.

d. The use proposed is a permitted use, as described under Article III.

e. An unused variance expires one (1) year after the date of final appeal.

D. APPEALS

Appeals to the Board of Adjustment may be taken by any person aggrieved or by any officer, department, board or bureau of the municipality affected by any decision of the administrative officer, in the manner prescribed by RSA 31:69-71, as amended, (Re-codified in 1983 as RSA

677:1-14) within the time limit set by the Board of Adjustment according to said statute. The cost of advertising and costs of mailing the notices of a hearing shall be paid by the person making the appeal prior to the hearing.

ARTICLE VIII: ADMINISTRATION AND ENFORCEMENT

A. ADMINISTRATION

The Board of Selectmen or Building Inspector is hereby given the power and authority to enforce the provisions of this Ordinance and control issuance of building permits required under the regulations set forth.

B. ISSUING PERMITS

The Building Inspector shall issue any and all building permits required in accordance with the Town of Bridgewater Building Regulations for a specific plan and use. No permit shall be issued for the erection of any structure and the use of land unless the proposal complies with the provision of this Ordinance.

C. ENFORCEMENT

Upon receiving any credible information that this Ordinance is being violated, and upon an affirmative vote that a violation more probably is being committed, the Selectmen are authorized hereby to enforce the provisions of this Ordinance by application for appropriate relief in the Superior Court, or by taking any other legal action.

Any violation of any provision of this Ordinance by any person, firm, corporation or other legal entity, whether the owner of property or whether acting under authority of such owner, shall be a violation pursuant to the Criminal Code of New Hampshire for each day of such offense. In addition, after conviction, the additional penalties provided for by RSA 31:88 (Re-Codified in 1983 as RSA 676:17) may apply.

ARTICLE IX: MISCELLANEOUS PROVISIONS

A. SAVING CLAUSE

The invalidity of any provision of this Ordinance shall not affect the validity of any other provision.

B. EFFECTIVE DATE

This ordinance shall take effect immediately upon its adoption.

C. AMENDMENTS

This Ordinance may be amended by majority vote of any Town Meeting, in accordance with the provisions of RSA 31, as amended. (Re-codified in 1983 as RSA 675).

D. VALIDITY

Whenever the provisions of this Ordinance or rulings made under the authority hereof differ from those of other ordinances or regulations of the Town, that provision or ruling which imposes greater restriction or higher standard shall govern.

ARTICLE X: DEFINITIONS

For the purposes of this Ordinance, the following terms have the following meaning:

1. **Abutter:** Means any person whose property adjoins or is directly across the street or stream from the land under consideration. For purposes of receiving testimony only, and not for purposes of notification, the term abutter shall include any person who is able to demonstrate that his/her land will be directly affected by the proposal under consideration. (For purposes of abutter notification, the Pemigewasset River shall be considered a stream.)

2. **Accessory Building:** A subordinate building incidental to and on the same lot occupied by the main building or use. The term "accessory building", when used in connection with a farm, shall include all buildings customarily used for farm purposes.

3. **Building:** Any structure having a roof and intended for the shelter, housing or enclosure of persons, animals or property.

4. **Cluster Development:** Means a pattern of subdivision development which places housing units into compact groupings while providing a network of commonly owned or dedicated open space.

5. **Commercial Use:** An occupation, employment, or enterprise that is carried on for profit by the owner, leasee, or licensee. It excludes such uses as those engaged in the basic processing and manufacturing of materials or products predominately from extracted raw materials; or a use engaged in storage of or manufacturing processes using flammable or explosive materials; or storage or manufacturing processes that potentially involve hazardous or commonly recognized offensive conditions.

6. **Dwelling, Single-Family:** A detached residential building designed for and occupied by one family only.

7. **Dwelling, Two-Family:** A residential building designed for or occupied by two families living independently of each other in individual dwelling units.

8. **Dwelling, Multi-Family:** A residential building designed for or occupied by three or more families, with the number of families in residence not exceeding the number of dwelling units provided or permitted.

9. **Dwelling Unit:** One room, or rooms connected together, constituting a separate independent housekeeping establishment for owner occupancy, rental or lease, and physically separated from any other rooms or dwelling units which may be in the same structure, and containing independent cooking, sanitary and sleeping facilities. It shall include manufactured housing, sectional homes and modular units, provided these units meet the standards of the local building code, but shall not include motel, hotel, lodging house or similar structure.

10. **Frontage:** Means the width of a lot measured along its common boundary with the street line.

11. **Group Development:** The residence of a group of six (6) or more persons, not related by blood, marriage, adoption, or guardianship and living together as a single unit.

12. **Home Business: See IV:H**

13. **Light Industrial Use:** A use engaged in the manufacture predominately from previously prepared materials of finished products or parts including processing, fabrication, assembly, treatment, packaging, incidental storage, sales and distribution of such products but excluding basic industrial processing.

14. **Lot:** A parcel of land occupied or to be occupied by only one main building and the accessory buildings or uses customarily incidental to it. A lot shall be of sufficient size to meet minimum zoning requirements for use, coverage and area, and to provide such yards and other open spaces as are herein required.

15. **Lot Frontage:** Lot width measured at the street lot line. When a lot has more than one street lot line, lot width shall be measured, and the minimum lot width required by the ordinance shall be provided at each such line.

16. **Manufactured Housing:** Any structure, transportable in one or more sections, which, in the traveling mode, is 8 body feet or more in width and 40 body feet or more in length, or when erected on site, is 320 square feet or more, and which is built on a permanent chassis and designed to be used as a dwelling with or without a permanent foundation when connected to required utilities, which include plumbing, heating and electrical heating systems contained therein. Manufactured housing as defined in this section shall not include presite built housing as defined in RSA 674:31-a.

17. **Non-Conforming Structure, Use or Lot:** A structure, use or lot that does not conform to the regulations of the zoning district in which it is carried on or located.

18. **Parking Space:** An off-street space available for the parking of one (1) motor vehicle.

19. **Steep Slopes:** Any land area where the inclination of the land's surface from the horizontal is fifteen percent (15%) or greater. Slope is measured and expressed as a percentage that represents the relationship between elevation and horizontal distance; for example, if the land rises ten feet (10') in elevation over a horizontal distance of one hundred feet (100'), the slope of the land is 10/100, or ten percent (10%).

20. **Street or Public Street:** A public right-of-way which the Town or State has the duty to maintain regularly or a right-of-way shown on a subdivision plat approved by the Planning Board and recorded with the County Register of Deeds which provides the principal means of access to abutting property.

21. **Structure:** Anything constructed or erected, the use of which requires location on the ground or attachment to something having location on the ground. It shall not include a minor installation, such as a fence less than six feet (6') high, mailbox or flagpole.

22. **Variance:** A relaxation of the terms of this Ordinance, where such relaxation will not be contrary to the public interest and where, owing to conditions peculiar to the property, a literal enforcement of this Ordinance would result in unnecessary and undue hardship.

23. **Wetland:** An area of one-quarter (.25) acre or more where standing water is retained for a portion of the year and unique vegetation has adapted to the area. Wetlands include very poorly and poorly drained soils and all areas designated as swamps, marshes and bogs by the U.S. Department of Agriculture, Grafton County Soil Conservation Service. (The "Grafton County Soil Conservation Service" was re-named "The Natural Resources Conservation Service" in 1995.)

24. **Wetland Soils:** Wetland or Hydric Soils are problematic soils that impose restrictions and limitations on the use of land for development because of their ability to retain water. Wetland Soils shall consist of Poorly and Very Poorly Drained Soils as determined by the Grafton County Soil Conservation Service. (The "Grafton County Soil Conservation Service" was renamed "The Natural Resources Conservation Service" in 1995.)

25. **Wireless Communication Facility**: Any tower, pole, antenna, accessway, or other structure intended for commercial use in connection with transmission or reception of radio or television signals, or any other electromagnetic spectrum-based transmission/reception.

TOWN OF BRIDGEWATER, NEW HAMPSHIRE

FLOODPLAIN DEVELOPMENT ORDINANCE

APPENDIX A AND ARTICLE IV-F OF THE BRIDGEWATER ZONING ORDINANCE

Adopted June 18, 1991

Amended March 14, 1995

Amended March 13, 2007

April 2005

THE TOWN OF BRIDGEWATER

FLOODPLAIN DEVELOPMENT ORDINANCE

HISTORY

ADOPTED JUNE 18, 1991

AMENDED MARCH 14, 1995

AMENDED MARCH 13, 2007

AMENDED MARCH 14, 2023

RESOLVED BY SELECTMEN
FEBRUARY 8, 2024

TOWN OF BRIDGEWATER, NEW HAMPSHIRE

FLOODPLAIN DEVELOPMENT ORDINANCE

APPENDIX A AND ARTICLE IV-F OF THE BRIDGEWATER ZONING ORDINANCE

PURPOSE AND AUTHORITY

This ordinance, adopted pursuant to the authority of RSA 674:16, shall be known as The Town of Bridgewater Floodplain Development Ordinance. The regulations in this ordinance shall overlay and supplement the regulations in The Town of Bridgewater Zoning Ordinance, and shall be considered part of the Zoning Ordinance for purposes of administration and appeals under State law. If any provision of this ordinance differs or appears to conflict with any provision of the Zoning Ordinance or other ordinance or regulation, the provision imposing the greater restriction or more stringent standard shall be controlling.

Pursuant to RSA 674:56, by resolution of the Board of Selectmen dated 12/28/2023 all lands designated as special flood hazard areas by the Federal Emergency Management Agency (FEMA) in its Flood Insurance Study for the County of Grafton, NH dated February 8, 2024 together with the associated Flood Insurance Rate Maps (FIRM) panels 33009C0992F, 33009C0994F,33009C1005F, 33009C1008F, 33009C1009F, 33009C1011F, 33009C1013F, 33009C1015F,33009C1016F, 33009C1017F, 33009C1018F, 33009C1019F, and 33009C1185F dated February 8, 2024 are declared to be a part of the Town of Bridgewater, N.H Zoning Ordinance and are hereby incorporated by reference.

ITEM I: DEFINITION OF TERMS

The following definitions shall apply only to this Floodplain Development Ordinance, and shall not be affected by the provisions of any other ordinance of the Town of Bridgewater.

AREA OF SPECIAL FLOOD IS the land in the floodplain within the Town of Bridgewater subject to a one percent (1%) or greater possibility of flooding in any given year. The Area is designated as zones A and AE on the Flood Insurance Rate Maps (FIRM).

BASE FLOOD means the flood having a one percent (1%) possibility of being equaled or exceeded in any given year.

BASE FLOOD ELEVATION (BFE) means the elevation of surface water resulting from the "base flood."

BASEMENT means any area of a building having its floor subgrade on all sides.

BUILDING - see STRUCTURE.

DEVELOPMENT means any man-made change to improved or unimproved real estate, including but not limited to buildings or other structures, mining, dredging, filling, grading, paving, excavation, drilling operation or storage of equipment or materials.

FEMA means the Federal Emergency Management Agency.

FLOOD or FLOODING means a general and temporary condition of partial or complete inundation of normally dry land areas from:

(1) the overflow in inland or tidal waters.
(2) the unusual and rapid accumulation or runoff of surface waters from any source.

FLOOD INSURANCE STUDY (FIS) means an examination, evaluation, and determination of flood hazards and if appropriate, corresponding water surface elevations, or an examination and determination of mudslide and/or flood-related erosion hazards.

FLOOD INSURANCE RATE MAP (FIRM) means an official map incorporated with this ordinance, on which FEMA has delineated both the special flood hazard areas and the risk premium zones applicable to the Town of Bridgewater.

FLOOD OPENING means an opening in a foundation or enclosure wall that allows automatic entry and exit of floodwaters. See FEMA "Technical Bulletin 1, Openings in Foundation Walls and Walls of Enclosures."

FLOODPLAIN or FLOOD-PRONE AREA means any land area susceptible to being inundated by water from any source (See definition of FLOODING, above.)

FLOOD PROOFING means any combination of structural and non-structural additions, changes, or adjustments to structures which reduce or eliminate flood damage to real estate or improved real property, water and sanitation facilities, structures and their contents.

FLOODWAY – see REGULATORY FLOODWAY.

HIGHEST ADJACENT GRADE means the highest natural elevation of the ground surface prior to construction next to the proposed walls of a structure.

HISTORIC STRUCTURE means any structure that is:

(a) Listed individually in the National Register of Historic Places (a listing maintained by the Department of Interior) or preliminarily determined by the Secretary of the Interior as meeting requirements for individual listing on the National Register;

(b) Certified or preliminarily determined by the Secretary of the Interior as contributing to the historical significance of a registered historic district or a district preliminarily determined by the Secretary to qualify as a registered historic district;

(c) Individually listed on a state inventory of historic places in states with historic preservation programs which have been approved by the Secretary of the Interior; or

(d) Individually listed on a local inventory of historic places in communities with historic preservation programs that have been certified either:

    1) By an approved state program as determined by the Secretary of the Interior, or

    2) Directly by the Secretary of the interior in states without approved programs.

LOWEST FLOOR means the lowest floor of the lowest enclosed area (including basement). An unfinished or flood resistant enclosure, useable solely for parking of vehicles, building access or storage in an area other than a basement area is not considered a building's lowest floor; provided, that such an enclosure is not built so as to render the structure in violation of the applicable non-elevation design requirements of this ordinance.

MANUFACTURED HOME means a structure, transportable in one or more sections, which is built on a permanent chassis and is designed for use with or without a permanent foundation when connected to the required utilities. For flood plain management purposes the term MANUFACTURED HOME includes park trailers, travel trailers, and other similar vehicles placed on site for greater than one hundred eighty (180) days. This includes manufactured homes located in a manufactured home park or subdivision.

MANUFACTURED HOME PARK OR SUBDIVISION means a parcel (or contiguous parcels) of land divided into two or more manufactured home lots for rent or sale.

MEAN SEA LEVEL means the National Geodetic Vertical Datum (NGVD) of 1929, North American Vertical Datum (NAVD) of 1988, or other datum, to which base flood elevations shown on a community's Flood Insurance Rate Map are referenced.

NEW CONSTRUCTION means, for purposes of determining insurance rates, structures for which the "start of construction" commenced on or after the effective date of an initial FIRM or after December 31, 1974, whichever is later, and includes any subsequent improvements to such structured. For floodplain management purposes, *new construction* means structures for which the start of construction commenced on or after the effective date of a floodplain management regulation adopted by a community and includes any subsequent improvements to such structures.

RECREATIONAL VEHICLE means a vehicle which is:

(a) Built on a single chassis;

(b) Four hundred (400) square feet or less when measured at the largest horizontal projection;

(c) Designed to be self-propelled or permanently towable by a light duty truck; and

(d) Designed primarily not for use as a permanent dwelling but as temporary living quarters for recreational camping, travel or seasonal use.

REGULATORY FLOODWAY means the channel of a river or other watercourse and the adjacent land areas that must be reserved in order to discharge the base flood without cumulatively increasing the water surface elevation.more than a designated height.

SPECIAL FLOOD HAZARD AREAS (See AREA OF SPECIAL FLOOD HAZARD).

START OF CONSTRUCTION includes substantial improvements, and means the date the building permit was issued, provided the actual start of construction, repair, reconstruction, placement, or other improvement was within one hundred eighty (180) days of the permit date.

The actual start means either the first placement of permanent construction of the structure on site, such as the pouring of slab or footings, the installation of piles, the construction of columns, or any work beyond the state of excavation; or the placement of manufactured home on a foundation.

Permanent construction does not include land preparation, such as clearing, grading and filling; nor does it include the installation of streets and/or walkways; nor does it include excavation for a basement, footing, piers, or foundations or the erection of temporary forms; nor does it include the installation on the property of accessory buildings, such as garages or sheds not occupied as dwelling units or part of the main structure.

STRUCTURE means for floodplain management purposes, a walled and roofed building, including a gas or liquid storage tank, that is principally above ground, as well as a manufactured home.

SUBSTANTIAL DAMAGE means damage of any origin sustained by a structure whereby the cost of restoring the structure to its before-damaged condition would equal or exceed fifty percent (50%) of the market value of the structure before the damage occurred.

SUBSTANTIAL IMPROVEMENT means any reconstruction, rehabilitation, addition, or other improvement of a structure, the cost of which equals or exceeds 50 percent of the market value of the structure before the "start of construction" of the improvement. This term includes structures which have incurred "substantial damage," regardless of the actual repair work performed. The term does not, however Include either:

a. Any project for improvement of a structure to correct existing violations of state or local health, sanitary, or safety code specifications which have been identified by the local code enforcement official and which are the minimum necessary to assure safe living conditions; or
b. Any alternation of a "historic structure," provided that the alteration will not preclude the structure's continued designation as a "historic structure."

VIOLATION means the failure of a structure or other development to be fully compliant with the community's floodplain management regulations.

WATER SURFACE ELEVATION means the height, in relation to the National Geodetic Vertical Datum (NGVD) of 1929, North American Vertical Datum (NAVD) of 1998, (or other datum, where specified) of floods of various magnitudes and frequencies in the floodplain.

ITEM II: PERMIT REQUIRED

All proposed development in any such flood hazard areas shall require a permit.

ITEM III: PERMIT APPLICATION REVIEW

The Building Inspector shall review all building permit applications for new construction or substantial improvements to determine whether proposed building sites will be reasonably safe from flooding. If a proposed building site is located in a special flood hazard area, all new construction or substantial improvements shall:

(i) be designed (or modified) and adequately anchored to prevent flotation, collapse, or lateral movement of the structure resulting from hydrodynamic and hydrostatic loads, including the effects of buoyancy,

(ii) be constructed with materials resistant to flood damage,

(iii) be constructed by methods and practices that minimize flood damage,

(iv) be constructed with electrical, heating, ventilation, plumbing, and air conditioning equipment, and other service facilities that are designed and/or located so as to prevent water from entering or accumulating within the components during conditions of flooding..

ITEM IV: REPLACEMENT OF WATER AND SEWER SYSTEMS

Where new or replacement water and sewer systems (including on-site systems) are proposed in a special flood hazard area the applicant shall provide the Building Inspector with assurance that these systems will be designed to minimize or eliminate infiltration of flood waters into the systems and discharges from the systems into flood waters, and on-site waste disposal systems will be located to avoid impairment to them or contamination from them during periods of flooding.

ITEM V: INFORMATION REQUIRED

For all new or substantially improved structures located in Zones A or AE, the applicant shall furnish the following information to the Building Inspector:

(a) The as-built elevation (in relation to mean sea level) of the lowest floor (including basement) and include whether or not such structures contain a basement.

(b) If the structure has been flood proofed, the as-built elevation (in relation to mean sea level) to which the structure was flood proofed.

(c) Any certification of flood proofing.

The Building Inspector shall maintain for public inspection, and shall furnish such information upon request.

ITEM VI: GOVERNMENTAL PERMITS REQUIRED

The Building Inspector shall not grant a building permit until the applicant certifies that all necessary permits have been received from those governmental agencies from which approval is required by Federal or State law, including Section 404 of the Federal Water Pollution Control Act, Amendments of 1972, 33 U.S.C. 1334.

ITEM VII: ALTERATION OR RELOCATION OF WATERCOURSES

1. In riverine situations, prior to the alteration or relocation of a watercourse the applicant for such authorization shall notify the Wetlands Bureau of the New Hampshire Department of Environmental Services and submit copies of such notification to the Building Inspector, in addition to copies required by RSA 482–A:3. Further, the applicant shall be required to submit copies of said notification to those adjacent communities as determined by the Building Inspector, including notice of all scheduled hearings before the Wetlands Bureau.

2. The applicant shall submit to the Building Inspector, certification provided by the registered professional engineer, assuring that the flood carrying capacity of an altered or relocated watercourse can and will be maintained.

3. The Building Inspector shall obtain, review, and reasonably utilize any floodway data available from Federal, State, or other sources as criteria for requiring that all development located in Zone A meet the following floodway requirement:

   "No encroachments, including fill, new construction, substantial improvement, and other development are allowed within the floodway that would result in any increase in flood levels within the community during the base flood discharge."

4. Along watercourses that have not had a Regulatory Floodway designated or determined by a Federal, State or other source, no new construction, substantial improvements, or other development (including fill) shall be permitted within zone AE on the FIRM, unless it is demonstrated by the applicant that the cumulative effect of the proposed development, when combined with all existing and anticipated development, will not increase the water surface elevation of the base flood more than one foot (1') at any point within the community.
5. Along watercourses with a designated Regulatory Floodway, no encroachments, including fill, new construction, substantial improvements, or other development are allowed within the floodway unless it has been demonstrated through hydrologic and hydraulic analyses performed in accordance with standard engineering practices that the proposed encroachment would not result in any increase in the flood levels within the community during the base flood discharge.

ITEM VIII: SPECIAL FLOOD HAZARD AREAS

1. In special flood hazard areas, the Building Inspector shall determine the base year flood elevation in the following order of precedence according to the data available:

   a. In zone AE refer to elevation data provided in the community's Flood Insurance Study and accompanying FIRM.

   b. In A zones, the Building Inspector shall obtain, review, and reasonably utilize any base flood elevation data available from any Federal, State or other source including data submitted for development proposals submitted to the community (i.e. subdivision, site approvals). Where a base flood elevation is not available or not known for Zone A, the base flood elevation shall be determined to be at least 2 feet above the highest adjacent grade.

2. The Building Inspector's base flood elevation determination will be used as criteria for requiring in zones AE and A that:

   a. all new construction or substantial improvements of residential structures have the lowest floor (including basement) elevated to or above the base flood elevation;

   b. that all new construction or substantial improvements of non-residential structures have the lowest floor (including basement) elevated to or above the base flood level; or together with attendant utility and sanitary facilities, shall:

      (i) Be flood proofed so that below the base flood elevation the structure is watertight with walls substantially impermeable to the passage of water;

(ii) Have structural components capable of resisting hydrostatic and hydrodynamic loads and the effects of buoyancy; and

(iii) Be certified by a registered professional engineer or architect that the design and methods of construction are in accordance with accepted standards of practice for meeting the provision of this section;

c. all manufactured homes to be placed or substantially improved within special flood hazard areas shall be elevated on a permanent foundation such that the lowest floor of the manufactured home is at or above the base flood level; and be securely anchored to resist flotation, collapse, or lateral movement. Methods of anchoring may include, but are not limited to, use of over-the-top or frame ties to ground anchors. This requirement is in addition to applicable state and local anchoring requirements for resisting wind forces;

d. for all new construction and substantial improvements, fully enclosed areas below the lowest floor that are subject to flooding are permitted provided they meet the following requirements:

(1) The enclosed area is unfinished or flood resistant, usable solely for parking or vehicles, building access or storage;

(2) The area is not a basement;

(3) Shall be designed to automatically equalize hydrostatic flood forces on exterior walls by allowing for the entry and exit of floodwater.

Designs for meeting this requirement must either be certified by a registered professional engineer or architect or must meet or exceed the following minimum criteria:

(1) a minimum of two (2) openings having a total net area of not less than one (1) square inch for every square foot of enclosed area subject to flooding shall be provided,

(2) the bottom of all openings shall be no higher than one foot (1') above the grade,

(3) Openings may be equipped with screens, louvers, or other coverings or devices provided that they permit the automatic entry and exit of floodwater.

e. recreational vehicles placed on sites within special flood hazard areas shall either:

(i) be on the site for fewer than one hundred eighty (180) days,

(ii) be fully licensed, on wheels or jacking system, attached to the site only by quick disconnect type utilities and security devices, and have no permanently attached additions or

(iii) meet all the standards of this ordinance and the elevation and anchoring requirements for “manufactured home” in this ordinance.

ITEM IX: VARIANCES AND APPEALS

1. Any order, requirement, decision or determination of the Building Inspector made under this ordinance may be appealed to the Zoning Board of Adjustment as set forth in RSA 676:5.

2. If the application, upon appeal, requests a variance as authorized by RSA 674:33,1(b), the applicant shall have the burden of showing in addition to the usual variance standards under State law:

   (a) that the variance will not result in increased flood heights, additional threats to public safety, or extraordinary public expense.

   (b) that if the requested variance is for activity within a designated regulatory floodway, no increase in flood levels during the base flood discharge will result.

   (c) that the variance is the minimum necessary, considering the flood hazard, to afford relief.

3. The Zoning Board of Adjustment shall notify the applicant in writing that:

   (i) the issuance of a variance to construct below the base flood level will result in increased premium rates for flood insurance up to amounts as high as $25.00 for $100.00 of insurance coverage, and

   (ii) such construction below the base flood level increases risks to life and property.

   Such notification shall be maintained with a record of all variance actions.

4. The community shall:

   (i) maintain a record of all variance actions, including their justification for their issuance, and

   (ii) report such variances issued in its annual or biennial report submitted to FEMA's Federal Insurance Administrator.

TOWN OF BRIDGEWATER, NEW HAMPSHIRE

SITE PLAN REVIEW REGULATIONS

Adopted September 17, 1985

Amended September 20, 2016

September 2016

SITE PLAN REVIEW REGULATIONS

Bridgewater, New Hampshire

Adopted September 17, 1975
Amended September 20, 2016

I. AUTHORITY

Pursuant to the authority vested in the Bridgewater Planning Board by the voters of the Town of Bridgewater on March 12,1985, in accordance with Chapter 674:43 of the New Hampshire Revised Statutes Annotated, the Bridgewater Planning Board adopts the following regulations for the submission of Site Plans for review under Non-Residential or Multi-Family Site Plan Review procedures.

No development or change in use for non-residential properties or for multi-family dwelling units other than one and two-family dwellings, whether or not such development includes a subdivision or re-subdivision of the site shall be established, nor shall any building or other structures for such use be erected or externally remodeled or enlarged and no area for parking, loading, vehicle services or driveway access or storage of equipment or material shall be established or changed except in conformity with site plan approval by the Planning Board.

II. PURPOSE

The intent of these Site Plan Review Regulations is to protect the public health, safety and welfare; to ensure the adequacy of traffic access, circulation and parking; to ensure the provision of adequate buffers, landscaping and screening to protect adjoining properties against any possible detrimental or offensive uses on the site, including but not limited to unsightly or obnoxious appearance, smoke and noise; and to protect against adverse environmental impacts from a proposed development, including inadequate sewage disposal refuse and other waste and/or inadequate surface drainage.

These regulations recognize that certain developments and uses of land, even though generally suitable for location in a particular zoning district, because of their complexity, size or possible impact, may adversely affect the public health, safety and welfare unless careful consideration has been given to certain critical design elements. It is the intent of these regulations to provide a vehicle for the review of an applicant's attention to such critical design elements within the development subject to site plan review and to allow the Bridgewater Planning Board to approve with conditions or to disapprove, applications pursuant to these regulations.

III. JURISDICTION

1. A site plan submitted to the Planning Board for review and approval must be in compliance with the Town of Bridgewater Zoning Ordinance, The Town of Bridgewater Subdivision Regulations or any other ordinance which pertains to the proposed development. In the event a special exception or variance is required for such compliance, the Planning Board may conditionally approve the Site Plan. Such conditionally approved plan is not valid and may not be recorded until the Zoning Board of Adjustment has acted. All plans shall be prepared in accordance with these Site Plan Regulations, including the Site Plan Checklist, which is part thereof, and shall be accompanied by a properly filled out application for a building permit.

2. For site plans that involve land designated as “Special Flood Hazard Areas” (SFHA) BY THE National Flood Insurance Program (NFIP):

A. The Planning Board shall review the proposed development to assure that all necessary permits have been received from those governmental agencies from which approval is required by Federal or State law including Section 404 of the Federal Water Pollution Control Act Amendments of 19722, 33 U.S.C 1334.

B. The Planning Board shall require that all proposals for development greater than 50 lots or 5 acres, whichever is the lesser, include the Base Flood Elevation (BFE) data within such proposals (i.e. floodplain boundary and 100-year flood elevation).

C. The Planning Board shall require the applicant to submit sufficient evidence (construction drawings, grading and land treatment plans) so as to allow a determination that:

(i) all such proposals are consistent with the need to minimize flood damage;
(ii) all public utilities and facilities, such as sewer, gas, electrical and water systems are located and constructed to minimize or eliminate flood damage; and
(iii) adequate drainage is provided so as to reduce exposure to flood hazards.

IV. CERTIFICATE OF USE AND OCCUPANCY

Upon completion of construction and prior to the occupancy of the premises, a Certificate of Use and Occupancy shall be obtained from the Selectmen or their authorized agent, the Building Inspector.

V. SITE PLAN APPLICATION AND REVIEW PROCEDURE

A. Pre-Application Discussion

An applicant may appear before the Planning Board to discuss preliminary thinking on the proposal with the Board and receive information from it on the requirements for submitted site plans. A "rough drawn" preliminary sketch may be submitted at this time to aid in the discussion.

B. Application Procedure and Requirements

An owner or a designated agent shall file an application with the Board not less than twenty-one (21) days prior to a regularly scheduled meeting of the Board. The Board shall only consider a completed application which consists of the following:

(1) An application for Site Plan approval;
(2) A Site Plan Application checklist;
(3) Site Plan containing information per the checklist;
(4) The abutters list;
(5) Application, publication and abutter fees;
(6) Payment of the Technical Review Fee as provided for in the Technical Review Fee Regulation; and
(7) Delivery of an executed Technical Review Fee Agreement as provided for in the Technical Review Fee Regulation.

C. Technical Review Fees

1. **Authority.** The Town of Bridgewater in accordance with the provisions of Chapter 674, Sections 35 through 42, has adopted Planning and Land Use Regulations and in accordance with Chapter 674:43, the Town of Bridgewater has adopted Site Plan Review Regulations. In accordance with the provisions of RSA 676:41(g), the Bridgewater Planning Board has adopted the following technical review fee schedule and procedure.

2. **Policy.** In order for the Planning Board of the Town of Bridgewater to fully implement the purposes and intent of the Subdivision Regulations and Site Plan Review Regulations, it is the policy of the Town of Bridgewater Planning Board to retain the services of independent consultants to review the technical information submitted by an applicant and if necessary, to conduct special investigative studies which the Planning Board determines are necessary as a result of either a subdivision or a site plan review application.

   The policy will provide the Town of Bridgewater Planning Board with the technical assistance necessary for the review of technical data submitted and/or to obtain the technical data necessary in order for the Planning Board to properly evaluate how the particular application affects the purposes and intent expressed in the Subdivision Regulations and Site Plan Review Regulations.

3. **Purposes.** (RSA 676:41(g) The purpose of this regulation is:

(a) To provide the Planning Board with a procedure to assess a particular applicant the actual costs of special investigative studies, review of technical data and special documents and other technical review matters which relate to a particular application.

(b) To assure that the actual costs for special investigative studies, review of technical data and special documents and other technical review costs are in fact paid by the particular applicant.

(c) To provide a technical review fee/escrow fund procedure whereby the actual cost incurred by the Planning Board for special investigative studies, review of technical plans and data and other technical review costs for particular applications are paid from an escrow fund; and to establish a procedure for the replenishment of the fund, if necessary, and the return to the particular applicant of any funds which are not actually expended by the Town of Bridgewater Planning Board for these purposes.

4. **Technical Review Fee.** The applicant shall pay to the Planning Board the technical review fee as initially established by the Planning Board. The initial fee is based upon preliminary assessment of the magnitude and technical complexity of the proposed project and is only an estimate of the anticipated costs to the Planning Board for technical review services. The fee is premised on the following three (3) classifications. Each classification reflects a progressive level of technical complexity which corresponds with a sliding fee schedule. The purpose of the following class descriptions is to establish general guidelines which illustrate how the technical review fee is derived.

(a) **Class I- No Technical Review Anticipated -** The complexity of the application is such that technical review services are not anticipated. A technical review fee is not a requirement of a completed application. Should consideration of the application by the Board result in the need for technical review services, the Planning Board reserves the right to require a technical review fee subsequent to the acceptance of the application. Class I applications may typically include Boundary Line Adjustments, Home Occupation Site Plans and other minor projects that do not include technical elements.

(b) **Class II- Minor Level of Technical Review -** The technical complexity of Class II applications necessitates only a minimal amount of technical review in order for the Planning Board to assess the technical merits of the application. Class II applications may typically include low impact projects where the review will be limited to general plan review, test pit data, traffic flow, site distance evaluation, site inspection, etc. Class II applications do not include projects involving proposed road construction, municipal utility extension, drainage improvements or the review of investigative studies.

(c) **Class III – Comprehensive Level of Technical Review** - The technical complexity and magnitude of Class III applications necessitates a comprehensive level of technical review in order for the Planning Board to assess the technical merits of an application. Comprehensive review includes projects of moderate impact where the reviews may include grading plans, erosion/sediment control plans, drainage plans, design review for on-site and/or off-site improvements, and new road construction or major impact projects, incorporating significant elements of drainage, traffic, environmental impact road construction, utility extension, etc. Because of the complexity of projects under this classification, the Planning Board shall, after meeting with a Consultant, the applicant and/or the applicant's engineer, determine the required initial technical review fee required under the regulation.

Application Classification	Type I	Type II	Type III
Subdivision	N/A	$ 500.00	Per Estimate
Site Plan Review	N/A	$ 500.00	Per Estimate

5. **Payment.** The payment of the Technical Review Fee estimate and an executed fee agreement are requirements of a Completed Application as defined in the Planning Board Regulations. The Planning Board will not accept an application as complete without the payment of the technical review fee and the delivery of the executed fee agreement. Payment must be made, in the amount determined by the Planning Board, by way of check made payable to the Town of Bridgewater delivered to the Board of Selectmen. The technical review fee will be held in an interest-bearing escrow account by the Town Treasurer. Payment from the review fee account will be made to pay the actual costs of consulting services rendered to the Planning Board for technical review of the particular application.

6. **Additional Review Fee.** The technical review fee is an initial estimate of the cost of technical services. The actual final cost to the applicant is in part a function of:

   (1) the impact and technical complexity of the project; and/or
   (2) the quality of the technical documentation submitted; and/or
   (3) the frequency of submission for technical review; and/or
   (4) consistency with applicable local, state and federal laws and regulations.

   If, prior to the final approval/disapproval it is determined that the initial fee estimate is inadequate to cover anticipated actual costs, then the applicant will be given notice that an additional technical review fee is necessary. The amount will be determined by the Planning Board or designee. The additional technical review fee is due and payable ten (10) days from the date of the notice. If the applicant fails to pay the additional technical review fee when due, the Planning Board will discontinue the review of the particular application until such payment is received. Continual non-payment may result in disapproval of the application as a result of the failure of the applicant to pay the costs of fees

7. **Final Accounting.** After final action on the application and required by the Board. (RSA 676:41(e)). upon receipt and payment of the final invoices from the technical review consultants, the Planning Board or its designee shall submit to the applicant an account summary for all monies expended for consulting services. Any balance after the payment of all costs for technical services shall be returned to the applicant.

8. **Appeal.** The Planning Board has final authority to determine the appropriate technical review fee. An applicant has the right to request from the Planning Board the review of the retainer fee determination and other issues which arise from the interpretation and implementation of this regulation.

D. Notification and Public Hearing Procedures

The Board, before considering or taking formal action upon a site plan, shall hold a public hearing as required by the provisions of RSA 676:4 to provide an opportunity for public testimony.

At the hearing, the applicant, any abutters or any person with a direct interest in the matter may testify in person or in writing. Other persons may testify subject to Board approval at the hearing.

If the Site Plan needs no special exception or variances from the Zoning Board of Adjustment, the applicant, all abutters and any engineer, architect, surveyor, or soil scientist whose professional seal appears on the plat shall be notified of the hearing by certified mail, return receipt requested, stating the time and place of such hearing, and a general description of the site plan proposal and its location, at least ten (10) days before the date fixed for the hearing. If the Zoning Ordinance is involved, Planning Board action is advisory only. Notification shall be carried out for the hearing called by the Zoning Board of Adjustment.

E. Board Action on Completed Application

The Board shall consider a completed application within thirty (30) days of its submission and acceptance, and shall act to approve, modify and approve or disapprove the application within ninety (90) days, subject to an additional ninety (90) days extension as provided in accordance with RSA 676:4. Additionally, the applicant may request a waiver of this requirement and consent to a mutually agreeable extension of the period for action.

Approval of the final site plan shall be written endorsement on the plan and signed by a majority of the Planning Board. In case of disapproval of any part of the plan, the grounds for such disapproval shall be stated in the records of the Board and notice given to the applicant. If the Board grants approval subject to modifications being made to the plan, the applicant shall submit a revised plan showing all modifications. The revised plan shall become the final plan for filing with the Planning Board.

F. Compliance Hearing

Whenever the Planning Board conditionally approves a site plan, with a condition or conditions precedent on the approval, all such conditions should be met within a specified period of time as determined by the Board, at which time a noticed hearing shall be held to provide abutters an opportunity to review and comment on the full compliance with the conditions precedent.

G. Building Permits

No building permits shall be issued on any plan acted upon by the Planning Board until such time as the Selectmen or their authorized agent, the Building Inspector, has received a copy of the approved site plan with the Building Permit Application.

VI. AMENDMENT OF APPROVAL

The Planning Board shall have the power to modify or amend its approval of a site plan on application of the owner, lessee, or mortgagee of the premises, or upon its own motion, if such power is reserved by the Board in its original approval. Any site plan coming before the Board for modification or amendment shall be placed on the agenda and posted in the usual manner. The Board reserves the right to require certified mail notification to abutters if it is deemed necessary and the applicant shall then submit a list of abutters names and addresses and a certified mail fee for each mailing. Notification shall be as set forth in these regulations under Section C, third paragraph.

VII. IMPACT STATEMENT (ANALYSIS)

The Planning Board may require an impact analysis as a requirement of its Site Plan Review, if in the opinion of the Board that increased activities, traffic circulation, parking, noise, smoke, lighting, environmental, community facilities or surrounding land uses will be directly or indirectly or potentially affected by the proposed development. It shall be the responsibility of the developer to pay all reasonable costs for such analysis as may be required by the Board. The Board shall not grant final site plan approval until all costs have been paid in full.

VIII. HIRING OF CONSULTANTS

The Board may require that a site plan or any portion thereof be reviewed by a consultant to ensure compliance with all applicable local, state and federal regulations, construction standards and building codes. The Town shall periodically retain a consulting firm for this purpose. The consultant shall submit a written report to the Board summarizing the technical review of the proposal. The cost of such consultant shall be paid by the applicant prior to the Board's final approval or disapproval of the Site Plan.

IX. REVIEW OF DOCUMENTS

The Planning Board shall require submission of condominium declarations, cooperative, or association documents for review and comment by Town Counsel on the contents and sufficiency of the proposed documents. The applicant shall reimburse the Town for any legal fees incurred in this review.

X. PERFORMANCE BOND

The Board of Selectmen may, upon notification by the Planning Board, require the applicant to post a bond or file a cash escrow agreement in an amount approved by the Board to guarantee conformity with the elements such as street, sewer, water or drainage improvements of the site plan. Where an applicant is required to post a bond, it shall be posted prior to the start of any construction, improvement or issuance of a building permit.

XI. STATUTE OF LIMITATIONS

Planning Board approval of a site plan shall be valid for one year from the date of approval. If a building permit has not been issued or if a building permit has been issued but not substantially (defined as more than fifty percent (50%) complete in the view of the Building Inspector) acted upon within a one (1) year period, the approval shall automatically become null and void. Projects requiring more than a one-year period shall be negotiated as to time of substantial completion prior to approval.

XII. FEE SCHEDULE

An application for Site Plan approval must be accompanied by an application filing fee. The Fee Schedule for Planning Board applications can be found in Appendix B of these regulations. In addition to the application filing fee, abutter notification and publication fees are required at the time an application is filed. Reasonable fees in addition to fees for notice may be imposed by the Board to cover its administrative expenses and costs of special investigative studies, review of documents and other matters which may be required by particular applications.

XIII. SIGNS

Whenever an existing sign which meets all the requirements of the Town of Bridgewater Zoning Ordinance is proposed for an advertising change because of a tenant change in a commercial establishment or a minor change in the location and placement of an approved sign, the owner or the owner's agent may require that the Planning Board waive the requirements of a site plan review. The Planning Board may grant such waiver and allow the Board's agent to review and approve of such sign change request, providing the Board has determined that such waiver will not affect the purpose and intent of the Site Plan Review Regulations.

XIV. GENERAL REQUIREMENTS FOR SITE PLAN SUBMISSION

An application for site plan approval shall be accompanied by the following information and documents: (This may require preparation by a professional. [Recommended by the Planning Board]).

A. Base Survey

1. Bearings and lengths of the boundaries of the parcel.

2. Topography with not more than five-foot (5') contour interval. At major construction sites contour interval should be no more than two feet (2'). Existing contours shall be shown as dashed lines.

3. Reference to established permanent bench mark based on U.S.G.S. or other datum approved by the Town Engineer.

4. Location and names of approved roadways and rights-of-way and easements.

5. Boundaries of existing natural features (rivers, lakes, wetlands, swamps, ledges, etc.).

6. Surface cover of area (weeded, cleared, graveled or paved areas).

7. Any important specimen trees.

8. All existing features on and within a minimum of fifty feet (50') of the site boundaries, one hundred feet (100') from front corners on State highways, and one hundred feet (100') back from right-of-way lines (buildings, fences, streams, roads, walks, utility lines, or easements).

B. Site Plan

1. Sheet size 24" X 36" with 1" border on three (3) sides and 2" on left edge.

2. Scale: 1" equals twenty feet (20') preferred.

3. Title block in lower right corner giving name and location of development, scale, contour interval, survey by, design by, seal of surveyor, seal of the Engineer or Architect, legend.

4. North arrow.

5. Location plan—shows site in relation to surrounding portion of the Town.

6. Zoning district designations and boundaries

C. Site Plan Details

1. Planned roads showing:
   a. Complete horizontal and vertical alignment data.
   b. Planned roads width (shoulder to shoulder), include typical cross section.
   c. Access, drives and openings.
   d. Right-of-way location.

2. Parking area, location with overall dimensions, parking method (parallel or angle) capacity, and type of surface.

3. Structures and special facilities:
   a. Location to scale.
   b. Proposed finished grade elevation at foundation.
   c. Floor elevations.

4. Finished contours—proposed grades shown in solid lines.

5. Location of proposed and existing water lines, wells, sewerage lines, sewage systems, surface drainage system and utility lines, including location of source, tanks, drains, size of pipes, poles, and sewage disposal fields, service areas, loading area.

6. Limit of lawn areas, location and type of landscape planting, existing trees to remain.

7. Location of walks, fences and screening.

8. Location of signs and lighting.

9. Site lighting.

D. Additional Material or Information Required

1. For on-lot sewage systems: New Hampshire Water Supply and Pollution Control Division approval for construction.

2. Approved driveway permit from State Highway Department and/or the Town of Bridgewater.

3. Sight distance at entrance from ten feet (10') off edge of pavement.

4. Plans and elevations of structure and/or signs and lighting facilities.

XV. DESIGN STANDARDS AND REQUIRED IMPROVEMENTS

A. Off-Street Parking and Loading

General Requirements. All developments shall make adequate provisions for off-street parking and loading facilities. Such facilities shall be designed to ensure the orderly flow of traffic on the site. The design shall also minimize the impact of intrusive elements of parking and loading such as noise, dust and glare upon neighboring properties and land uses.

Whenever an existing use is expanded or changed to a new use, parking and/or loading facilities shall be provided for such new use. Every development shall provide an area for parking and loading on the site which is properly drained. The number and size of parking spaces and the loading area shall conform to the requirements in the Bridgewater Zoning Ordinance.

All developments shall provide for parking and loading to be situated on the same parcel of land as the primary use or structure except when off-street public parking is available. The calculations used to determine the number of parking spaces shall be shown. Consideration shall be made for the plowing, storage or removal of snow during the winter months.

B. Off-Street Parking Requirements and Performance Standards

1. **Function and Purpose**

Off-street parking is an important functional and aesthetic design element. Off-street parking shall be required in accordance with these regulations in order to accommodate the needs of customers, patrons and employees and for purposes of promoting safety, adequacy and convenience.

2. **Number of Spaces**

Guidelines for Off-Street Parking Requirements are set forth in Table1.

TABLE 1
OFF-STREET PARKING REQUIREMENTS

USE	MIN. # OF OFF-STREET PARKING SPACES
1. Single-Family Res. & Duplex	2 spaces/dwelling unit
2. Multi-family	1 space for each unit with one bedroom and an additional ½ space for each additional bedroom in each unit +1 guest space/4 units.
3. Multi-Family (elderly)	1 space/dwelling unit + 1 guest space/4 units
4. Hotels, Motels, Inn	1 space/rented sleeping room & one space for 50 SF of floor area for meetings and functions
5. Hospitals	1 ½ spaces per bed
6. Educational Facilities	1 space/3 seats in largest public assembly room (auditorium, gym, cafeteria, etc.) or 1 space/staff member, whichever is greater.
7. Rest Home/Nursing Home	1 space/4 beds
8. Place of Assembly with Seating such as a Church, Funeral Parlors, Auditorium, Restaurant, Theatre, etc.	1 space/3 seats
9. Place of Assembly without fixed seats such as a Skating Rink, Meeting/Function Rooms, Dance Hall, etc.	1 space/100 SF of floor space accessible to the public.
10. Kindergarten, Nursery School, Day Care Facilities	1 space/10 children
11. Library, Museum, Gallery	1 space/100 SF accessible to the public
12. Marinas	1.5 spaces/wet slip
13. Bowling Lane	5 spaces/bowling lane
14. Retail Commercial	1 space/200 SF of sales floor area plus 1 space/ 600 SF of storage
15. Office Building, Banks, Business and Professional Offices	1 space/200 SF of gross floor area
16. Medical Offices	1 space per 150 SF of gross floor area
17. Service Stations	1 space/100 SF of area in service bays
18. Roadside Stand	4 spaces/stand
19. Industrial	1 space/250/SF of floor area designed to be occupied by employees, not including areas used only for storage, utilities, fully automated equipment, etc. No off-street parking shall be maintained within the required front yard.

A parking summary shall be provided for all proposed new construction and proposed changes of use. The summary shall be presented in the format prescribed by the Board as set forth as figure 1. In the event the number of spaces proposed is less than the required parking indicated in Table 1, the applicant shall provide written justification for the proposed number of parking spaces.

FIGURE 1
OFF-STREET PARKING SUMMARY

USE	RATE PER TABLE 1	REQUIREMENT PER TABLE 1	PROPOSED

c. Specially designated parking for the physically handicapped shall be provided in accordance with Table 2 below.

TABLE 2
DESIGNATED PARKING FOR THE PHYSICALLY HANDICAPPED

TOTAL PARKING IN LOT	REQUIRED MINUM NUMBER OF ACCESSIBLE SPACE
1 to 25	1
26 to 50	2
51 to 75	3
76 to 100	4
101 to 150	5
151 to 200	6
201 to 300	7
301 to 400	8
401 to 500	9
501 to 1000	2 percent of total
1001 and over	20 plus 1 for each 100 over 1000

d. An alternative number of off-street parking spaces to those listed in Table 1 may be approved by the Planning Board provided the applicant has demonstrated to the satisfaction of the Board that such standards better reflect local conditions, special circumstances or uses not set forth in Table 1.

3. **Size of Spaces**

   a. Each off-street parking space shall measure a minimum of ten (10) feet in width by twenty (20) feet in length for new construction.

   b. Larger parking space dimensions shall be permitted.

   c. Handicap parking spaces shall measure twelve (12) feet in width. Two (2) eight (8) foot wide spaces separated by a four (4) foot wide center; striped aisle can be used as an alternative.

4. **Parking Areas**

   a. All parking areas and access roads must be paved.

   b. On-site parking areas shall be oriented to and within a reasonable walking distance of the buildings they are designed to serve.

   c. Access to parking areas shall be designed so as not to obstruct flow of traffic. There shall be adequate provisions for ingress and egress from all parking spaces to ensure ease of mobility, ample clearances, and safety of pedestrians and vehicles.

   d. On-site circulation patterns shall be designed to provide sufficient maneuvering room for vehicles entering or leaving the lot, individual spaces or designated loading/delivery areas.

   e. Dead-end parking bays are prohibited

   f. Fire lanes may be required upon recommendation of the Bridgewater Fire Chief.

   g. The minimum width of aisles providing access to individual parking spaces shall be in accordance with Figure 2.

   h. Parking areas shall be designed so that overhanging vehicles will not conflict with walkways, signage, landscaping or lighting structures.

   i. Off-site parking may be approved upon such terms and conditions the Board may determine are necessary to provide safe, adequate and convenient parking.

   j. Site plans shall clearly indicate all proposed striping including parking spaces, no parking zones, circulation patterns and islands.

   k. Parking areas should be located and designed so as to avoid the appearance of "strip development".

FIGURE 2

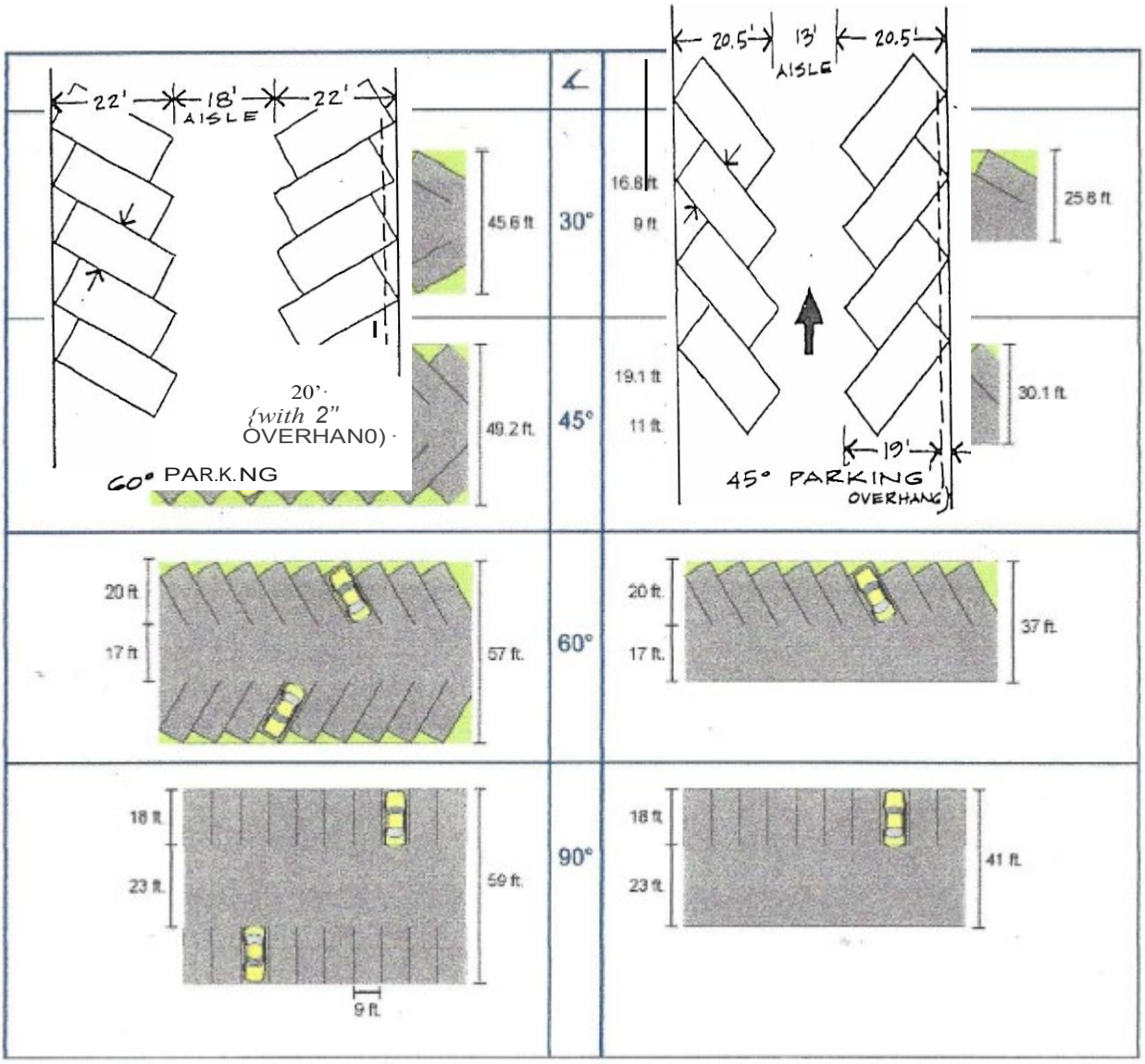
22'
18'
AISLE
22'
20'
{with 2"
OVERHAN0)
60° PAR.K.NG
45.6 ft
30°
49.2 ft.
45°
20.5'
13'
AISLE
20.5'
16.8 ft
9 ft
25.8 ft
19.1 ft
11 ft
30.1 ft.
19'
45° PARKING
OVERHANG
20 ft
17 ft
57 ft.
60°
20 ft.
17 ft.
37 ft.
18 ft
23 ft.
59 ft.
9 ft.
90°
18 ft
23 ft.
41 ft.

5. **Parking Lot Landscaping**

a. Parking areas shall be suitably landscaped to minimize noise, glare and to improve the overall environment of the site.

b. Landscaping shall be used to separate large parking lots into smaller sections.

c. Landscape material selection and location shall anticipate growth patterns and shall not interfere or obstruct sight lines for pedestrians and vehicles.

d. Landscape material selection and location shall anticipate specific demands associated with parking lot environments including but not limited to snow removal, snow storage, heat generation, soil compaction, drainage, etc.

6. **Parking Lot Lighting**

a. Parking lot lighting shall be designed to provide the minimum lighting necessary to ensure adequate vision and comfort.

b. Parking lot lighting shall not cause glare or direct illumination onto adjacent properties or streets.

c. Parking lot lighting fixtures shall be cut-off fixtures as defined by the Illuminating Society of North America (IESNA). See Figure 3 below.

FIGURE 3
Cut-off fixture as defined by IESNA.

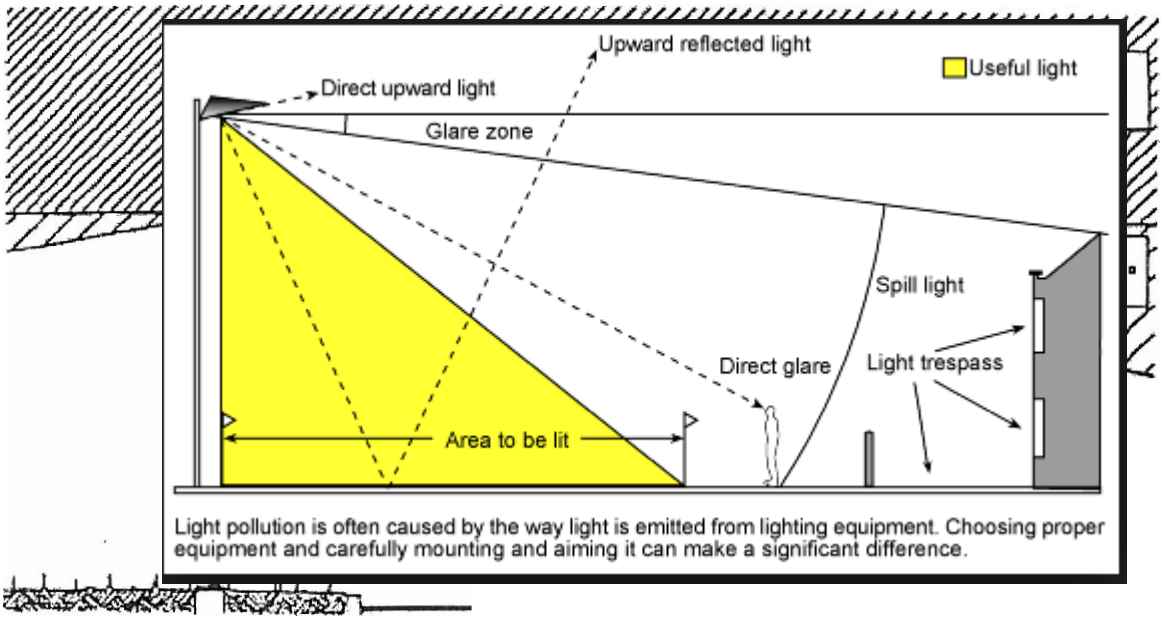

d. The design for an area may suggest the use of parking lot lighting fixtures of a particular historical period or architectural style. If such fixtures are not "cut-off' fixtures, the fixtures and lumens generated by the fixture shall be specified so as to minimize potential adverse impacts.

e. Mounting heights of lighting fixtures shall be appropriate to the scale of the surrounding architecture and the scale of the site.

f. The Board may require a lighting plan showing the location of all proposed lighting fixtures, lighting levels and distribution patterns.

7. **Other Considerations**

a. Limits of all proposed curbing and curbing type(s) shall be clearly indicated on the site plan.

b. Curbing may be required for purposes of drainage, safety and delineation and protection of pavement edge. Curbing may also be required for the delineation of parking areas, for the protection of landscaped areas and/or lighting fixtures, at intersections, corners and tight radii.

c. Parking lot design shall consider potential conflicts between proposed curbing and snow removal.

d. Flexibility regarding curb type shall be permitted as long as the curb type adequately accommodates the purposes intended. Granite curbing may be required in favor of other materials in areas where the durability of the curbing or the appearance of the parking area is of particular importance.

e. Use of asphalt curbing will not be allowed.

C. Signs

All development proposals shall submit designs for all new proposed signage. Additionally, the size and location of existing signs shall be noted on the plan.

Sign size, type, location, height and illumination shall conform to the Bridgewater Zoning Ordinance.

Any sign which refers to a discontinued use shall be removed. All signs shall be maintained in good condition and in good repair at all times.

D. Landscaping

A landscape plan shall be submitted which shall include:

The location (present and future), size and type, including common names of all new plant material to be installed.

The location of all existing plant material to be retained on the site.

The location, width and material of all walkways and pathways.

The location, type of material and dimensions of all fences, walls and outdoor recreation facilities.

Selective tree and/or shrub plantings may be required in established buffer areas or other areas as determined by the Board. Wood chips or crushed stone shall not be considered acceptable where green areas are required.

A landscaped buffer area shall be required wherever a zone or use other than residential abuts an adjacent residential property.

All landscaping must be maintained, or replaced if lost.

A minimum of 10% of the land area shall be reserved for green area.

E. Fire Protection

The purpose of this standard is to specify minimum requirements for water supply firefighting that will provide a reasonable degree of protection to life and property in the area.

The following standards shall be observed for all proposals requiring site plan approval consisting of seven (7) or more dwelling units in the case of multi-family residential development, or ten thousand (10,000) square feet of gross floor area in the case of commercial development.

1. Water supply shall be by cistern, dry hydrant or pressurized hydrant system. The cistern, dry hydrant or pressurized hydrant system shall have a minimum static capacity of 30,000 gallons of water on a year-round basis, with no dwelling unit in the subdivision over 1,500 feet distant.

2. A cistern system shall be designed by a registered professional engineer. All plans shall be signed by same.

3. The design of any of the above systems shall be submitted to the Planning Board and the Bridgewater Fire Chief before Site Plan approval. Approval by the Fire chief is mandatory.

4. Any cistern or pressurized hydrant system shall comply with National Fire Protection Standard 1231 and Fire Department Regulations on file in the Town Office. Specifications may be adjusted, if necessary, from Standard 1231 for the temperate zone of the Town. Any dry hydrant system shall comply with specification on file in the Town Office.

5. When questions develop not covered by this standard, NFPA Standard 1231 will be used to determine the occupancy hazard and the fire protection required.

6. The developer shall reserve sufficient land, minimum one-half (1/2) acre, not deductible from subdivision acreage consideration, from the development to provide siting for a water supply as identified in (1) above. This land shall be deeded to the Town as a condition of subdivision approval, along with access from the nearest traveled way or Town road. Maintenance responsibility (of said supply) will then reside with the Town.

XVI. DOCUMENTATION

Applications for site plan approval shall include the following documentation:

A statement describing the development, including the use or uses to be conducted on the lot or any changes of an existing use.

If the development is to be staged or phased, a description of the project in terms of such stages.

Deeds of easements and rights-of-way.

Covenants or restrictions that are intended to cover all or part of the land area to be developed.

Articles of Incorporation of a landowner's association and the By-Laws of the association.

The condominium declaration as it has been prepared for submittal to the State of New Hampshire Attorney General's Office.

XVII. ADMINISTRATION

A. Enforcement

The Planning Board shall have the power to modify or amend its approval of a site plan on application of the owner, lessee, mortgagee of the premises or upon its own motion if such power is reserved by the Board in its original approval.

Further, if within one year after a Certificate of Occupancy (temporary or permanent) has been issued and the building or structure is occupied or used and the Planning Board finds that any of the conditions of an approved final site plan application are in violation, the Planning Board shall give notice to the owner to make such corrections as it deems necessary to bring the use and operation into compliance with the conditions of such approval. Such order shall be complied with, within a period of time extending not more than 60 days from the original violation notice. Where the owner fails to conform with the notice and order of the Planning Board, the Board of Selectmen may impose a fine not to exceed $100 per day, levied against the owner, in addition to any other legal or equitable remedy as may be afforded through appropriate legal action.

B. Waivers

When, in the judgment of the Planning Board special circumstances exist where strict conformity with any specific requirements of these regulations would cause undue hardship or injustice to the owner of the land to be developed and being reviewed and where the review procedures have been in general conformity with these regulations and provided the general spirit, intent and purpose of these regulations will not be adversely or substantially affected or harmed, and further provided that the public convenience and welfare of the citizens of Bridgewater will be substantially served and not adversely affected, the Planning Board may waive or modify such specific requirements of these regulations.

In approving waivers, the Planning Board may require such conditions as will, in its judgment, secure substantially the objectives of the standards or requirements of these regulations.

A petition for any waiver shall be submitted in writing by the applicant at the time when the application is filed for the consideration of the Planning Board. The petition shall state fully the grounds for the waiver and all the facts relied upon by the petitioner.

C. Site Inspection

The Board and/or designated agent may conduct a site inspection for the purpose of determining natural/built up conditions of the site and to review the layout of the proposed improvements. (See application)

APPENDIX A

APPLICATION FOR SITE PLAN APPROVAL
AND
SITE PLAN APPLICATION CHECKLIST

SF X $0.03=

Disturb_____
Base fee_____
Abutter_____
Total Fee_____

BRIDGEWATER PLANNING BOARD
APPLICATION FOR SITE PLAN APPROVAL

Applicant _____ Phone _____ Fax _____

Mailing Address _____ Email _____

_____

Owner _____ Phone _____ Fax _____

Mailing Address _____ Email _____

Agent _____ Phone _____ Fax _____

Mailing Address _____ Email _____

Project Name _____ Tax Map _____ Lot _____

Location _____ Zoning District _____

Current Use:_____Proposed Use:_____Disturbed Area (sq. ft.):_____

Check all that apply to site plan:

☐ New Driveway

☐ New Water Service

☐ New Sewer Service

☐ ZBA Special Exception or Variance

☐ Waiver Request to Planning Board

AUTHORIZATION FOR REPRESENTATION:

I hereby authorize _____ to act as my representative in connection with this application to the Town of Bridgewater for the subject property. I understand as the property owner, I will be held responsible for all conditions provided in the Notice of Decision issued by the Bridgewater Planning Board. I also understand that the Notice of Decision and associated conditions run with the land in perpetuity. I authorize the Planning Board Members and their staff to access my property for the purpose of this review.

Owner(s) Signature: _____ Date: _____

_____ Date: _____

DECLARATION

I hereby certify to the best of my knowledge this application and information submitted as part of this application is correct and accurately represented.

Signature: _____ Date:_____
(Person Preparing Application)

SITE PLAN APPLICATION CHECKLIST

The following checklist items are required for an application to be accepted as complete by the Board. Provide all items below or insert a "W " if requesting a waiver. Include rationale for each waiver item. The Bridgewater Planning Board reserves the right to request additional information necessary for making an informed decision.

Applicant Staff **Tax Map:_____ Lot #:_____**

1. _____ _____ Completed application form and owner's signature.
2. _____ _____ Abutters list.
3. _____ _____ Fees: application and abutter notification (see Planning Board Fee Schedule).
4. _____ _____ Soil profile & percolation rate, date of field inspection and seal with signature of certified septic designer.*
5. _____ _____ Engineering plan for new roads and utility main extensions.*
6. _____ _____ Easements and deed restrictions, existing and proposed.

Site Plan, 3 copies to include the following items:

7. _____ _____ Lot area(s).
8. _____ _____ Lot lines and setbacks.
9. _____ _____ Lot Coverage proposed and maximum allowed by district.
10. _____ _____ Area of disturbance (grading, paving, building and landscaping) identified & in SF.
11. _____ _____Parking demand calculation.
12. _____ ____ Topography at 2' intervals.
13. _____ ____ Map scale and north arrow
14. _____ _____ Tax map and lot number.
15. _____ _____ zoning district.
16. _____ _____ Locus.
17. _____ _____ Plan and revision dates.
18. _____ _____ Owner of record.
19. _____ _____ Abutter names with tax map & lot number.
20. _____ _____ Surveyor name, seal and signature.
21. _____ _____ Easement locations, existing and proposed.
22. _____ _____ Roads, driveways and structures, existing and proposed.
23. _____ _____ Overhead utilities with pole locations and numbers.
24. _____ _____ Snow storage.
25. _____ _____ Fuel storage location.
26. _____ _____ Municipal water and sewer or well and septic locations, existing and proposed
27. _____ _____ Buildings, structures, cemeteries and rock walls.
28. _____ _____ Drainage elements, existing and proposed.
29. _____ _____ Wetlands:
    - _____ _____ a. Wetlands scientist name, certification number, stamp and signature
    - _____ _____ b. Date field work was performed.
    - _____ _____ c. mapping standards applied to delineation.
    - _____ _____ d. Applicable permit history
    - _____ _____ e. Identification of water resource, buffer and setbacks (see Zoning Ordinance)
    - _____ _____ f. Planning Board signature block

*May not apply to every site plan.

ABUTTERS LIST

Applicant:_____Tax Map:_____

Address_____ Lot # _____

In accordance with RSA 676:4 I(d), **the Planning Board shall notify** the abutters, the applicant, subject property owner, holders of conservation restrictions, and the engineer, architect, land surveyor, wetland scientist or soil scientist whose professional seal appears on any plat submitted. An **abutter** is any person whose property or conservation easement adjoins or is directly across the street or stream from the land under consideration by the Planning Board. Use additional paper if necessary.

1. Name_____Tax Map_____Lot# _____ _____
   Address _____
   _____
2. Name_____Tax Map_____Lot# _____ _____
   Address _____
   _____
3. Name_____Tax Map_____Lot# _____ _____
   Address _____
   _____
4. Name_____Tax Map_____Lot# _____ _____
   Address _____
   _____
5. Name_____Tax Map_____Lot# _____ _____
   Address _____
   _____
6. Name_____Tax Map_____Lot# _____ _____
   Address _____
   _____
7. Name_____Tax Map_____Lot# _____ _____
   Address _____
   _____
8. Name_____Tax Map_____Lot# _____ _____
   Address _____
   _____
9. Name_____Tax Map_____Lot# _____ _____
   Address _____
   _____

This office is not responsible for the information supplied above. Information can be obtained from the Tax Maps and Book in the Assessor's office.

APPENDIX 8
PLANNING BOARD APPLICATIONS
FEE SCHEDULE

Abutter Notification: $10/abutter notification + $50 publication fee

***See abutters list for number of notifications**

Site Plan Review:

- Home Occupation: $100
- Change of Use (w/no site modification): $125
- All other site plans: $150 + $0.03/SF of disturbance
- Amendments: $150 + $0.03/SF of disturbance (new or changed area)

***Total fee = site plan application fee + abutter fee**

Subdivision:

- Over 3 lots: $100/lot
- 3 or Less lots: $250
- Boundary Line Adjustment application: $100
- Town Recording: $75
- Grafton County Registry: dependent on document size

***Total fee = application fee + abutter fee + town recording fee + GCR recording fee**

Applications are subject to a Technical Review

TOWN OF BRIDGEWATER, NEW HAMPSHIRE

MISCELLANEOUS REGULATIONS AND ORDINANCES

SEASONAL TO YEAR-ROUND CONVERSIONS (synopsis):

A person, prior to converting a seasonal dwelling must seek a Conversion Permit from the Board of Selectmen. Applicants must demonstrate that the septic system has a prior State approval, or that sufficient site conditions exist to allow for the replacement of the existing system with a State approved system should the old system fail.

Adopted March 11, 1986

Note: Amendments to the Zoning Ordinance and Building Regulations regarding Seasonal Conversions were adopted by the Town of Bridgewater in March, 1999. Please reference those sections for specific regulations.

BAN ON WINTER PARKING (synopsis):

No overnight parking will be allowed from November 1 through April 1 on any Town road. Violators will be towed at their expense. (For the purposes of winter road maintenance.)

Adopted by the Board of Selectmen, 1980

PUBLIC DANCES:

Regulations regarding public dances, or operating public dance halls. In general, a written request shall be made to the Board of Selectmen. (See the Board of Selectmen for details.)

Adopted by Town Meeting, 1970

DOG CONTROL LAW:

It is unlawful for any dog to run at large, except when accompanied by the owner or custodian. See RSA 466:30-A for details.

Adopted by Town Meeting, 1980

The above is a summary of Regulations and Ordinances, is for reference and may not include modifications or additional Regulations or Ordinances in effect within the Town. Interested parties should contact the Board of Selectmen for additional information.

SEX OFFENDER RESTRICTION ORDINANCE

PURPOSE

Acknowledging that sex offenders who prey on children are at a higher risk of re-offending, the Town of Bridgewater has a compelling interest and responsibility to protect the health, safety and welfare of its children by restricting access to areas where there are high concentrations of children.

DEFINITIONS

1. Registered Sex Offenders: This ordinance shall only apply to offenders who have been convicted of the crime against a person under the age of 18 and as a result, are required to register for life pursuant to RSA 651-B:6.

2. School/Daycare: Any public or private educational facility that provides services to children in grades K-12 or any day care facility.

3. Protected Area: A school, day care, playground area, athletic field or court, public beach, or any recreational facility where minors regularly congregate completely or partially.

4. Radius: The distance shall be measured from the outer boundary lines of the properties in question within the boundaries of Bridgewater.

5. Premises: Shall mean the building structure or cartilage surrounding the building, playground area, playing fields, courts and beaches.

RESTRICTIONS

1. A registered sex offender shall not reside within a 2,500-foot radius of the property line of a Protected Area.

2. A registered sex offender as defined above is prohibited from entering upon the premises of a school or day care center, unless specifically authorized by the school administration or day care center administration.

EXCEPTIONS

This ordinance shall not apply to:

1. A residence of a Registered Sex Offender residing within 2500 feet of a Protected Area if the residency was established prior to the date of passage of this ordinance, or if a new Protected Area is proposed or built at a location that would otherwise be restricted under this ordinance after the date of residency.

PROTECTED AREAS

Protected area currently under this ordinance include:

1. The Bridgewater-Hebron Village School, 25 School House Rd.

2. Whittemore Point Association Beach, Shore Drive South

3. Sawhegenet Falls Park, River Road

4. Any licensed day care center that has been licensed by the State of New Hampshire.

PENALTIES

1. Any person violating the provisions of this ordinance shall be subject to a fine of not less than $500.00 for the first offense and shall relocate within 30 days. Any subsequent violations of this chapter by the same person shall be subject to a fine of not more than $1,000.00 and must vacate the premises within 27 hours.

2. Any person who fails to relocate within the 30 days will also be subjected to a $50.00 per day fine for the failing to comply with the ordinance. That fine will start 30 days after the subject has been notified by the Board of Selectmen to relocate, which notice may be given in the same manner as service of process in any district court action.

EFFECTIVE DATE

This ordinance shall be effective as of March 12, 2008.

POLICY FOR THE PERMITTING OF DRIVEWAYS AND OTHER ACCESSES TO BRIDGEWATER TOWN ROADS.

Adopted May 10, 2007

This policy was adopted by the Selectboard of Bridgewater, NH to provide a uniform procedure for the town for review of applications and submissions, and issuance of driveway permits.

The policy adopts the NH Department of Transportation "POLICY FOR THE PERMITTING OF DRIVEWAYS AND OTHER ACCESSES TO THE STATE HIGHWAY SYSTEM" with the following changes:
https://www.nh.gov/dot/org/operations/highwaymaintenance/documents/DrivewayPolicy.pdf

1. References to the State of NH, the Department of Transportation and to the District Engineer shall be considered to be Town of Bridgewater, the Bridgewater Highway Department and the Road Agent, respectively.
2. References to the State Highways or to state owned property shall be interpreted to mean town roads or town owned property.
3. Section 10. (g) Shall be changed to read ": for all other driveways the maximum grade shall be 12 percent."

This policy was adopted by the Selectboard of Bridgewater, NH, after public notice and a public hearing, on May 10, 2007.

TOWN OF BRIDGEWATER

HOME BUSINESS PERMIT APPLICATION

Note: A separate application is needed for each Home Business (maximum 2 per property).

Map & Lot # _____

Owner's Name(s) _____

Street Address of Property requiring a Permit _____

Applicant's Mailing Address _____

City, State, Zip Code _____

Telephone Number where Applicant can be reached _____

Zoning District Location:

General Residential _____ Commercial

_____ Lake District

_____ River Road District

Rural Residential

_____ Mountain Residential _____ Commercial/Industrial

PROPOSED PERMIT REQUESTED:

_____ New Home Business Permit

_____ Renewal of Home Business Permit (Current Permit Number _____)

Total Gross Floor Area of Residence: _____ sq ft
(Including basement & accessory structures)

Total Gross Floor Area to be used for Home Business: _____ sq ft.

Please describe the nature of the intended Home Business:

_____

_____

_____

If intended Home Business use is for Child Care:
Indicate the maximum number of children that you intend to provide care for: _____
Number of children under 6 years of age: _____
Number of children 6 years of age & older: _____

All businesses must conform to any New Hampshire state laws and regulations that apply to the business. Have all requirements from the State of New Hampshire been met to allow this business to be conducted according to state laws and regulations?
Yes _____ No _____

If No, explain below: (attach separate sheet if needed)

_____

_____

_____

All information provided in this application is accurate to the best of my knowledge.

APPLICANT'S SIGNATURE _____

DATE SUBMITTED TO TOWN _____

Include the $10.00 permit fee, payable to Town of Bridgewater, with the application.

(Note: Permits expire annually on April 30th, so a renewal application must be submitted if a Home Business will continue after the expiration date of the permit.)

Do not write below this line – For Town Official use.

APPLICATION:

_____ Approved. Permit Number: _____

_____ Not Approved – needs to go to Zoning Board of Adjustment.

Selectmen: _____

_____

_____

Date: _____

TOWN OF BRIDGEWATER, New Hampshire

HOME BUSINESS PERMIT

NAME:

STREET ADDRESS LOCATION:

NATURE OF BUSINESS:

PERMIT NUMBER:

ISSUE DATE:

EXPIRATION DATE: April 30, _____

This permit is issued subject to the regulations of the Town of Bridgewater, N.H. and shall conform to the signed application on file with the Town of Bridgewater, N.H.

Any violation may cause the permit to be cancelled and any penalties assessed, as per the regulations of the town.

_____

Selectmen/Permit Coordinator