DISTINCTIVE

by Top Doors

Kitchen-Bath Closet

ADDITIONAL CAPABILITIES

The following pages illustrate the standard components produced by Distinctive however can supply a wide variety of optional closet and storage components, hardware and accessories, including (but not limited to):

- ***Single-sided end panels***
- ***Drilled-through divider panels***
- ***Custom-sized end or divider panels***
- ***Custom-sized locking shelves***
- ***Cleat stock***
- ***Melamine drawer boxes standard***
- ***TandemBox, MetaBox, and LegraBox drawers optional***
- ***A wide variety of wire baskets***
- ***Round and oval clothes rods***
- ***Jewelry drawer inserts***
- ***Shoe shelves — fences and cubbies***
- ***Laundry hampers***
- ***Floor-set cabinet boxes***
- ***Optional melamines & lacquer finishes***

PLEASE NOTE This listing of optional, accessory hardware is only a small sample of commonly ordered items for closet and storage application; it is not exhaustive. Please check with Distinctive for your accessory hardware requirements.

*End panels are complete with selected banding on the front edge, hanger brackets, and mounting screws. All PVC edges are slightly radiused. Panels are non-handed, **line-bored one side**. NOTE End panel heights are determined by 32mm centers. See chart "End Panel Heights." See HR page to order Hanging Rail.*

EXPLANATION OF END PANEL NOMENCLATURE

C-EP-1630

- **CLOSET COMPONENTS**
- **END PANEL (ORDERED IN PAIRS, SINGLES OR DRILLED THRU)**
- **DEPTH**
- **NOMINAL HEIGHT**

NOTE: For Single End Panels, list "L" or "R" in the Exposed End column. For single Divider Panels, request "Drilled Thru", or "DT".

TYPICAL END PANEL HEIGHTS

Nominal Height	Actual mm	Actual Inches
30"	755mm	29.724"
36"	915mm	36.024"
42"	1075mm	42.323"
48"	1203mm	47.362"
60"	1523mm	59.961"
72"	1843mm	72.559"
84"	2131mm	83.897"

END PANELS

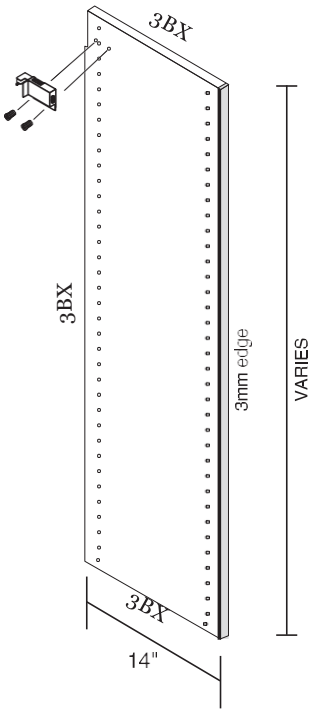

14" deep End Panel

C-EP-1430
C-EP-1436
C-EP-1442
C-EP-1448
C-EP-1460
C-EP-1472
C-EP-1484
C-EP-1496

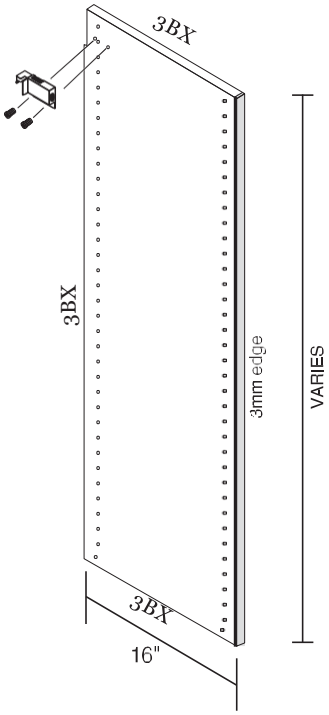

16" deep End Panel

C-EP-1630
C-EP-1636
C-EP-1642
C-EP-1648
C-EP-1660
C-EP-1672
C-EP-1684
C-EP-1696

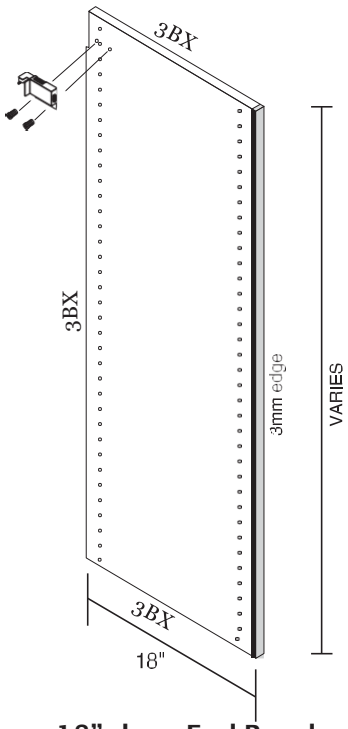

18" deep End Panel

C-EP-1830
C-EP-1836
C-EP-1842
C-EP-1848
C-EP-1860
C-EP-1872
C-EP-1884
C-EP-1896

Adjustable Shelves come complete with selected banding on the front edge and 4/ea "Rafix" cams and bolts. All PVC edges are slightly radiused. Position at top and/or bottom of end panel, as well as any line-boring position on the panel.

EXPLANATION OF LOCKING SHELF NOMENCLATURE

C – LS – 1214

- C: CLOSET COMPONENTS
- LS: LOCKING SHELF
- 12: NOMINAL UNIT DEPTH
- 14: LENGTH (SEE NOTE BELOW)

LOCKING SHELVES - EACH

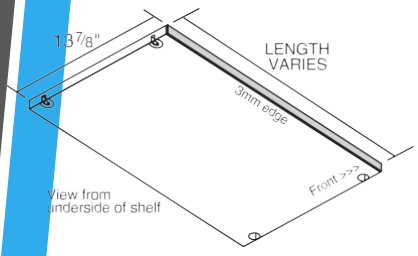

To install with 14" deep End Panels

C-LS-1214
C-LS-1514
C-LS-1814
C-LS-2114
C-LS-2414
C-LS-2714
C-LS-3014

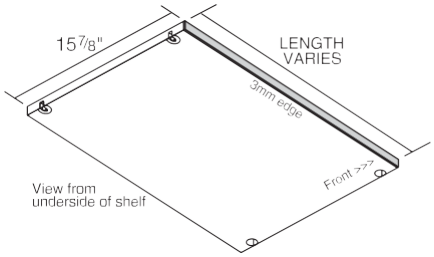

To install with 16" deep End Panels

C-LS-1216
C-LS-1516
C-LS-1816
C-LS-2116
C-LS-2416
C-LS-2716
C-LS-3016

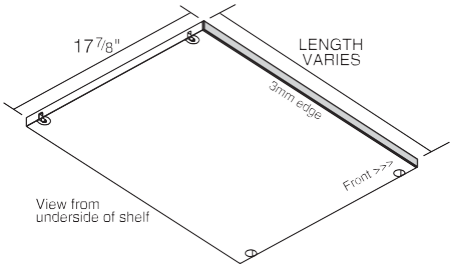

To install with 18" deep End Panels

C-LS-1218
C-LS-1518
C-LS-1818
C-LS-2118
C-LS-2418
C-LS-2718
C-LS-3018

EXPLANATION OF ADJUSTABLE SHELF NOMENCLATURE

C – AS – 2418

- C — CLOSET COMPONENTS
- AS — ADJUSTABLE SHELF
- 24 — NOMINAL UNIT LENGTH
- 18 — DEPTH

SEE NOTE BELOW

ADJUSTABLE SHELVES - EACH

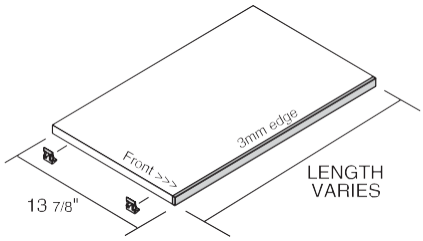

To install with 14" deep End Panels

C-AS-1214
C-AS-1514
C-AS-1814
C-AS-2114
C-AS-2414
C-AS-2714
C-AS-3014

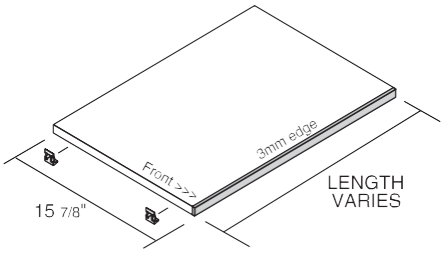

To install with 16" deep End Panels

C-AS-1216
C-AS-1516
C-AS-1816
C-AS-2116
C-AS-2416
C-AS-2716
C-AS-3016

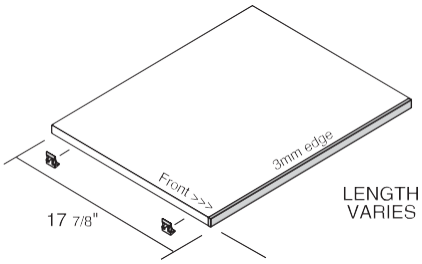

To install with 18" deep End Panels

C-AS-1218
C-AS-1518
C-AS-1818
C-AS-2118
C-AS-2418
C-AS-2718
C-AS-3018

Standard Distinctive Closet Components drawer boxes. The top edge of the drawer box is edged with .018: thick PVC to match the drawer box material color. The front end piece is pre-bored for adjusting screws (supplied with Drawer Fronts). There are other drawer box options available.

EXPLANATION OF DRAWER BOX NOMENCLATURE

C – D514 – 27

- C – CLOSET COMPONENTS
- D – DRAWER BOX
- 5 – 5" HIGH
- 14 – DENOTES USE WITH END PANELS 14" DEEP
- 27 – DENOTES THE UNIT WIDTH DRAWER BOX IS SIZED TO FIT.

DRAWER BOXES FOR 14" DEEP UNITS

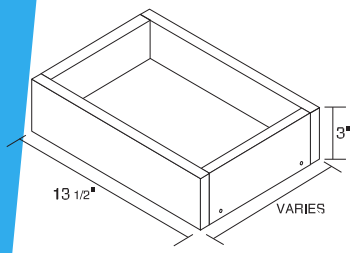

Drawer Boxes 3" high

C-D314-12
C-D314-15
C-D314-18
C-D314-21
C-D314-24
C-D314-27
C-D314-30

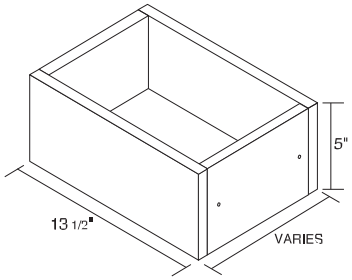

Drawer Boxes 5" high

C-D514-12
C-D514-15
C-D514-18
C-D514-21
C-D514-24
C-D514-27
C-D514-30

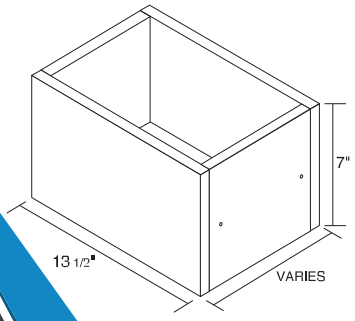

Drawer Boxes 7" high

C-D714-12
C-D714-15
C-D714-18
C-D714-21
C-D714-24
C-D714-27
C-D714-30

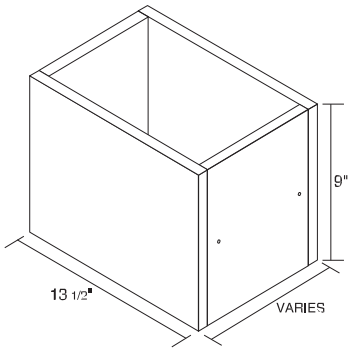

Drawer Boxes 9" high

C-D914-12
C-D914-15
C-D914-18
C-D914-21
C-D914-24
C-D914-27
C-D914-30

Standard Distinctive Closet Components drawer boxes. The top edge of the drawer box is edged with .018: thick PVC to match the drawer box material color. The front end piece is pre-bored for adjusting screws (supplied with Drawer Fronts). There are other drawer box options available.

EXPLANATION OF DRAWER BOX NOMENCLATURE

C – D 716 – 15

- C – CLOSET COMPONENTS
- D – DRAWER BOX
- 7 – 7" HIGH
- 16 – DENOTES USE WITH END PANELS 16" DEEP
- 15 – DENOTES THE UNIT WIDTH DRAWER BOX IS SIZED TO FIT.

DRAWER BOXES FOR 16" DEEP UNITS - EACH

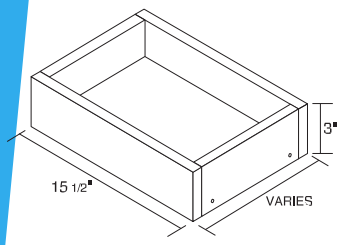

Drawer Boxes 3" high

C-D316-12
C-D316-15
C-D316-18
C-D316-21
C-D316-24
C-D316-27
C-D316-30

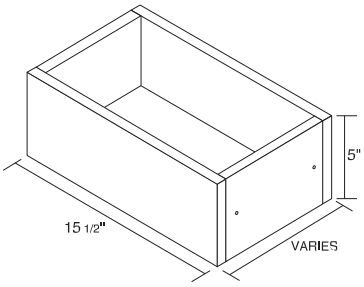

Drawer Boxes 5" high

C-D516-12
C-D516-15
C-D516-18
C-D516-21
C-D516-24
C-D516-27
C-D516-30

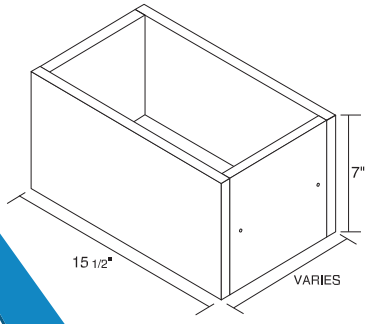

Drawer Boxes 7" high

C-D716-12
C-D716-15
C-D716-18
C-D716-21
C-D716-24
C-D716-27
C-D716-30

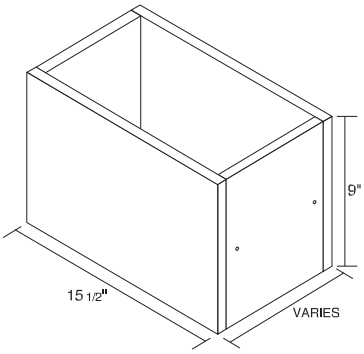

Drawer Boxes 9" high

C-D916-12
C-D916-15
C-D916-18
C-D916-21
C-D916-24
C-D916-27
C-D916-30

Standard Distinctive Closet Components drawer boxes. The top edge of the drawer box is edged with .018: thick PVC to match the drawer box material color. The front end piece is pre-bored for adjusting screws (supplied with Drawer Fronts). There are other drawer box options available.

EXPLANATION OF DRAWER BOX NOMENCLATURE

C – D 918 – 30

- C — CLOSET COMPONENTS
- D — DRAWER BOX
- 9 — 9" HIGH
- 18 — DENOTES USE WITH END PANELS 18" DEEP
- 30 — DENOTES THE UNIT WIDTH DRAWER BOX IS SIZED TO FIT.

DRAWER BOXES FOR 18" DEEP UNITS

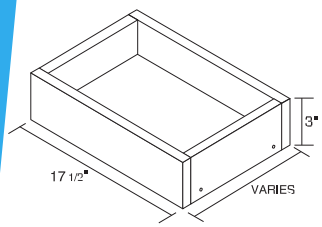

Drawer Boxes 3" high

C-D318-12
C-D318-15
C-D318-18
C-D318-21
C-D318-24
C-D318-27
C-D318-30

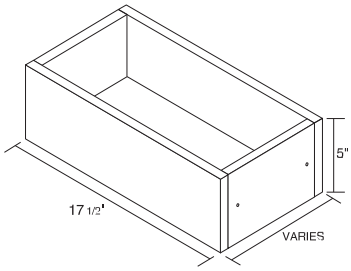

Drawer Boxes 5" high

C-D518-12
C-D518-15
C-D518-18
C-D518-21
C-D518-24
C-D518-27
C-D518-30

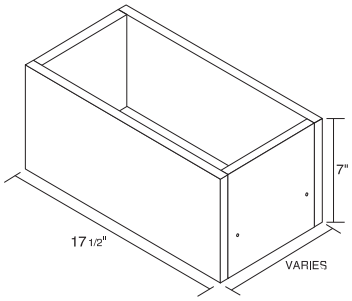

Drawer Boxes 7" high

C-D718-12
C-D718-15
C-D718-18
C-D718-21
C-D718-24
C-D718-27
C-D718-30

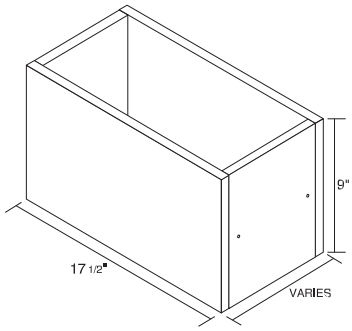

Drawer Boxes 9" high

C-D918-12
C-D918-15
C-D918-18
C-D918-21
C-D918-24
C-D918-27
C-D918-30

NOTE: Drawer Box types are available. For example, Dowel & Glue assembly, Confirmat screw assembly, solid wood Dovetail, MetaBox and TandemBox. Please contact Distinctive for optional Drawer Boxes.

Drawer Front(s) come complete with 3mm PVC on all 4 edges, Drawer Front Adjusters and adjusting screws supplied. All 3mm PVC edges are raduised. Note: Drawer Front heights are determined by 32mm centers. See chart.

EXPLANATION OF DRAWER FRONT NOMENCLATURE

C – DF – 21 07

- C – CLOSET COMPONENTS
- DF – DRAWER FRONT
- 21 – DENOTES THE UNIT WIDTH DRAWER FRONT IS SIZED TO FIT
- 07 – DENOTES THE HEIGHT OF DRAWER BOX USED WITH THIS FRONT

DRAWER FRONT HEIGHTS

Nominal Height	Actual Millimeters	Actual Inches
5" (3" drawer box)	124mm	4.882"
7" (5" drawer box)	188mm	7.402"
8½" (7" drawer box)	220mm	8.661"
11" (9" drawer box)	284mm	11.181"

DRAWER FRONTS

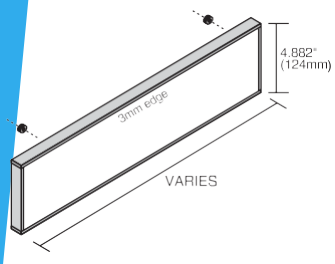

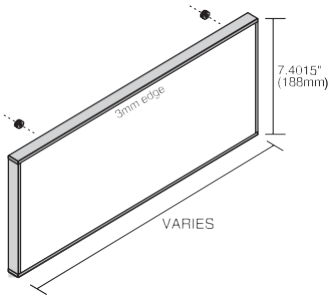

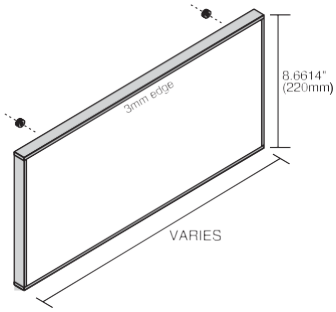

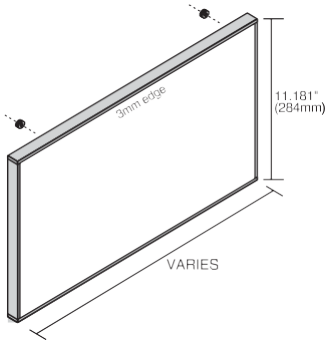

Drawer Fronts for use with Drawer Boxes 3" high	Drawer Fronts for use with Drawer Boxes 5" high	Drawer Fronts for use with Drawer Boxes 7" high	Drawer Fronts for use with Drawer Boxes 9" high
C-DF-1203	C-DF-1205	C-DF-1207	C-DF-1209
C-DF-1503	C-DF-1505	C-DF-1507	C-DF-1509
C-DF-1803	C-DF-1805	C-DF-1807	C-DF-1809
C-DF-2103	C-DF-2105	C-DF-2107	C-DF-2109
C-DF-2403	C-DF-2405	C-DF-2407	C-DF-2409
C-DF-2703	C-DF-2705	C-DF-2707	C-DF-2709
C-DF-3003	C-DF-3005	C-DF-3007	C-DF-3009

CLOSET COMPONENTS

EXPLANATION OF DOOR NOMENCLATURE

C – DR – 1820

- **C** – CLOSET COMPONENTS
- **DR** – DOOR(S)
- **18** – DENOTES THE WIDTH OF UNIT DOOR(S) ARE SIZED TO FIT
- **20** – NOMINAL HEIGHT OF DOOR(S)

DOOR HEIGHTS

Nominal Height	Actual Millimeters	Actual Inches
18”	476mm	18.740”
20”	508mm	20.000”
21”	540mm	21.260”
24”	604mm	23.780”
30”	732mm	28.819”

DOORS

Doors 18” high

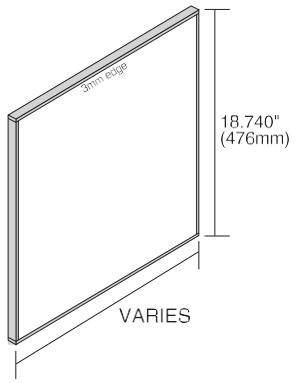

Single Door

C-DR-1218
C-DR-1518
C-DR-1818

Two Door Set

C-DR-2118
C-DR-2418
C-DR-2718
C-DR-3018

Doors 20” high

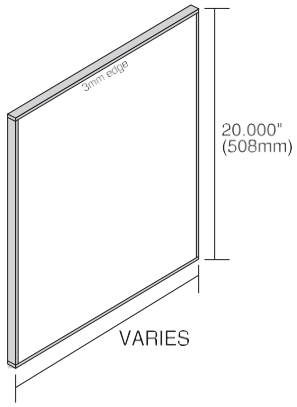

Single Door

C-DR-1220
C-DR-1520
C-DR-1820

Two Door Set

C-DR-2120
C-DR-2420
C-DR-2720
C-DR-3020

Doors 21” high

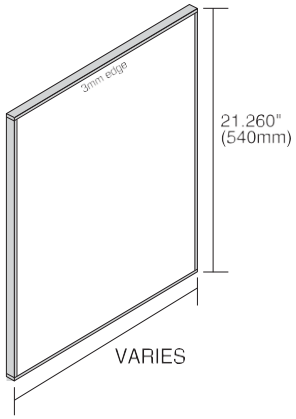

Single Door

C-DR-1221
C-DR-1521
C-DR-1821

Two Door Set

C-DR-2121
C-DR-2421
C-DR-2721
C-DR-3021

CLOSET COMPONENTS

Doors come complete with selected banding on all four edges, hinges, mounting plates, and screws. All PVC edges are slightly radiused.
NOTE Door heights are determined by 32mm centers. See chart "Door Heights."

EXPLANATION OF DOOR NOMENCLATURE

C – DR – 2730

- **C** – CLOSET COMPONENTS
- **DR** – DOOR(S)
- **2730** – DENOTES THE WIDTH OF UNIT DOOR(S) ARE SIZED TO FIT; NOMINAL HEIGHT OF DOOR(S)

DOOR HEIGHTS

Nominal Height	Actual Millimeters	Actual Inches
18”	476mm	18.740”
20”	508mm	20.000”
21”	540mm	21.260”
24”	604mm	23.780”
30”	732mm	28.819”

DOORS

Doors 24” high

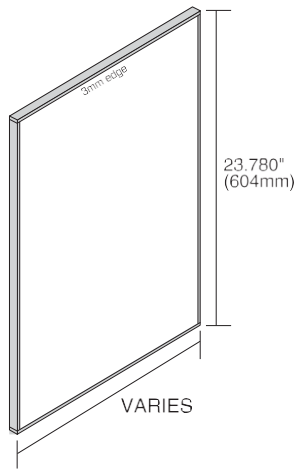

Single Door

C-DR-1224
C-DR-1524
C-DR-1824

Two Door Set

C-DR-2124
C-DR-2424
C-DR-2724
C-DR-3024

Doors 30” high

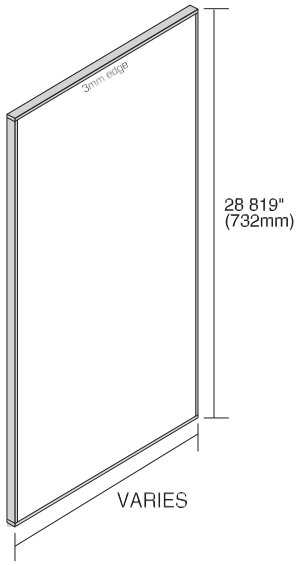

Single Door

C-DR-1230
C-DR-1530
C-DR-1830

Two Door Set

C-DR-2130
C-DR-2430
C-DR-2730
C-DR-3030

THE ABOVE PRICES ARE NOT SUBJECT TO DISCOUNT.

CLOSET COMPONENTS

HANGING RAIL

Closet Components come complete with the hardware required for assembly; however, you must order as many 8' lengths of hanging rail as your order will require for installation. Available stock cover strip colors include white, brown, almond/beige, and black.

ITEM	DESCRIPTION
HR-WT	*8" hanging rail with WHITE cover strip*
HR-BN	*8" hanging rail with BROWN cover strip*
HR-AL	*8" hanging rail with ALMOND/BEIGE cover strip*
HR-BK	*8" hanging rail with BLACK cover strip*

OPTIONAL CLOSET & STORAGE HARDWARE

The optional hardware items listed below are representative of the most commonly requested items for closet and storage orders.
NOTE: Distinctive can supply any item from Richelieu. Please contact Distinctive with your requirements.

- ***Oval clothes rod and brackets***
  - ***Chrome finish***
  - ***Cut to length or long lengths***
- ***Round clothes rod & brackets***
  - ***Chrome finish***
  - ***Cut to length or long lengths***
- ***Wire baskets***
  - ***Various widths, depths, finishes***
- ***Basket inserts and bags***
- ***Tie, belt, and scarf racks***
- ***Valet rods***
- ***Jewelry drawer inserts***
- ***Shoe fences and cubbies***
- ***Pulls and knobs***

PLEASE NOTE This listing of optional, accessory hardware is only a small sample of commonly ordered items for closet and storage application; it is not exhaustive. Please check with CabParts® for your accessory hardware requirements.

CLOSET COMPONENTS AND HARDWARE PRICING IS SUBJECT TO CHANGE WITHOUT NOTICE AND IS NOT SUBJECT TO A QUANTITY DISCOUNT.