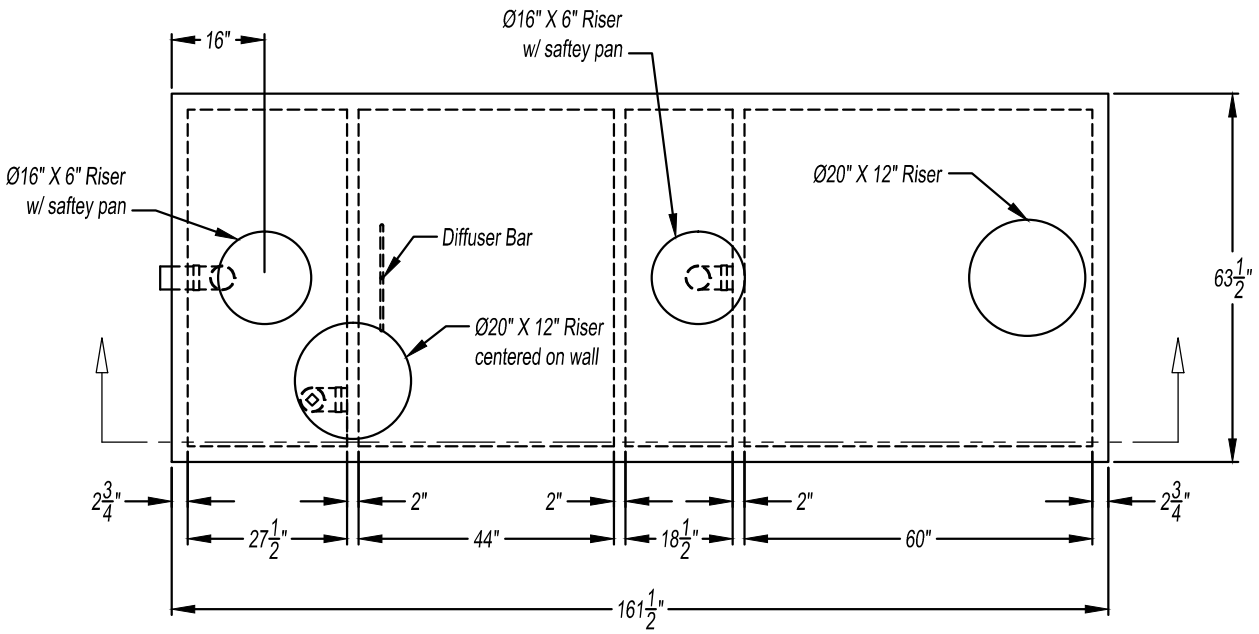

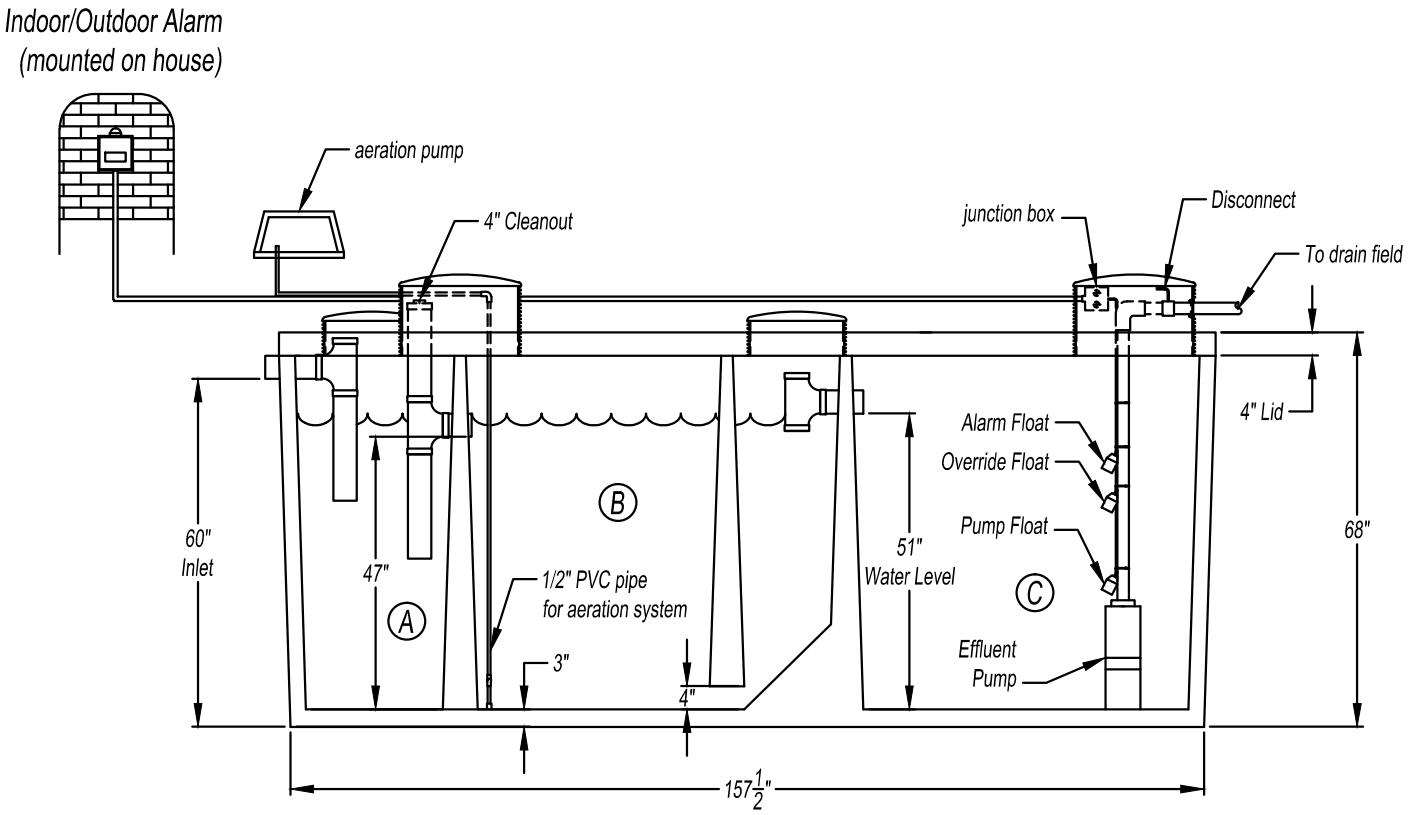

Liquid Volume
Compartment A = 321 Gal
Compartment B = 714 Gal
Compartment C = 735 Gal

SI Precast 5203 Interstate 45 North Ennis, TX 75119 (972)875-9605	SI PRECAST CONCRETE	SI Precast	
		Nuwater B550 Aqua Pura Texaire 600 GPD	
		Customer:	Drawn By: DW / Date: 2/8/2013
		File: H	Scale: 3/8" = 1' / Sheet: 01