Plan View

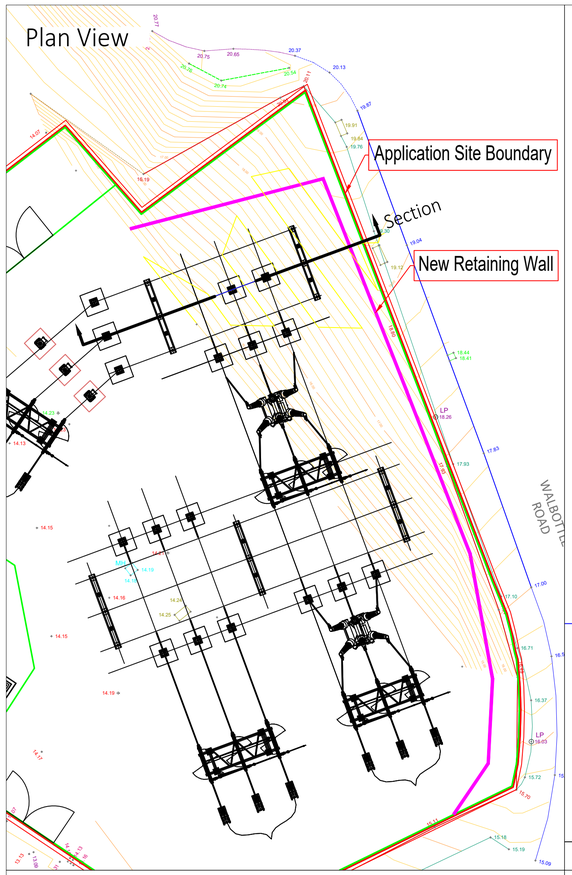

Stage 1

- Remove any vegetation or demolition material.

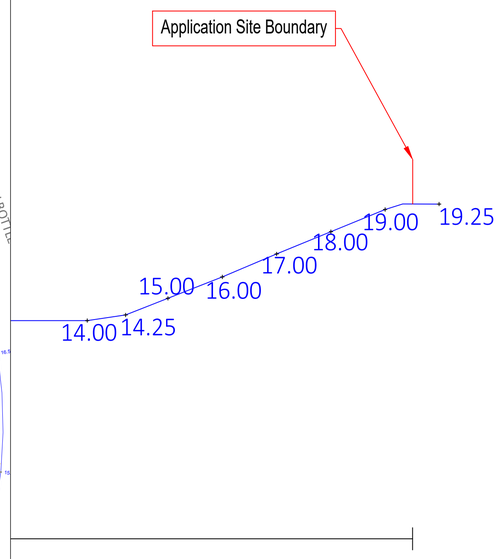

Stage 2

- Use a site won or imported Class 1 material to form a working platform adjacent to the Application Site Boundary.

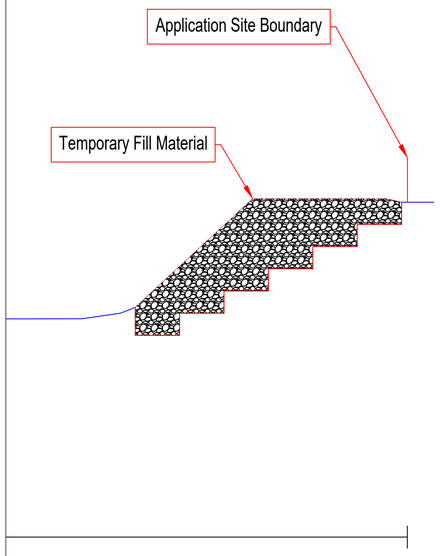

Stage 3

- From the platform install sheet piles along the Application Site Boundary.

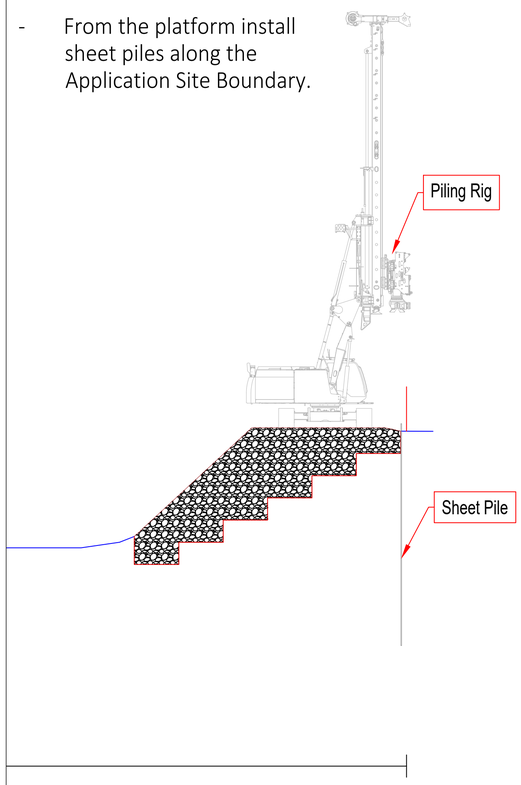

Stage 4

- Remove working platform and install temporary propping to support sheet pile wall.

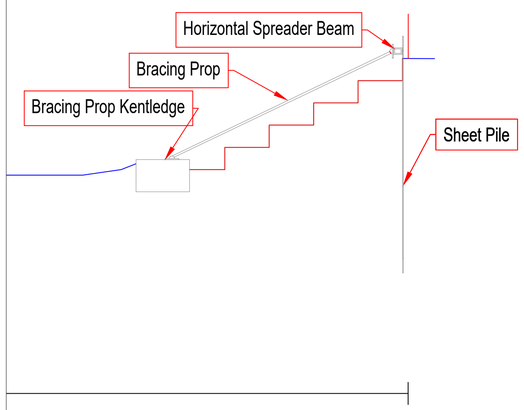

Stage 5

- Remove remainder of material in front of sheet pile wall.
- Construct reinforced concrete retaining wall either using pre-cast sections or insitu.
- Backfill between the concrete retaining wall and sheet piles with s self compacting fill material.

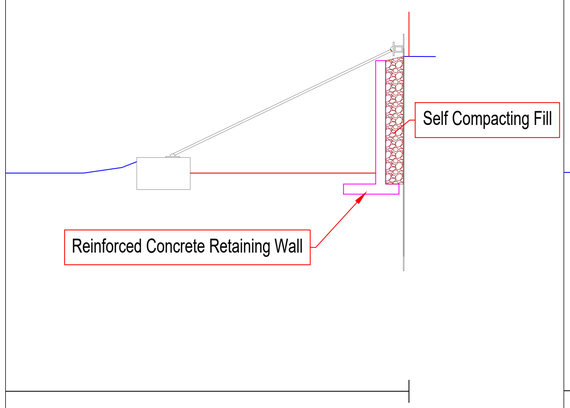

Stage 6

- Remove temporary propping and sheet piles.

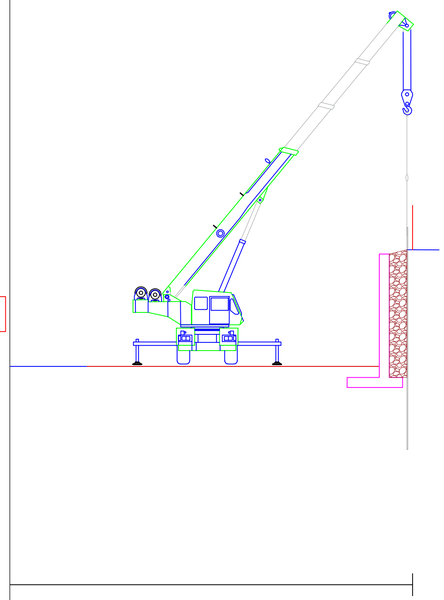

Stage 7

- Construct remainder of site

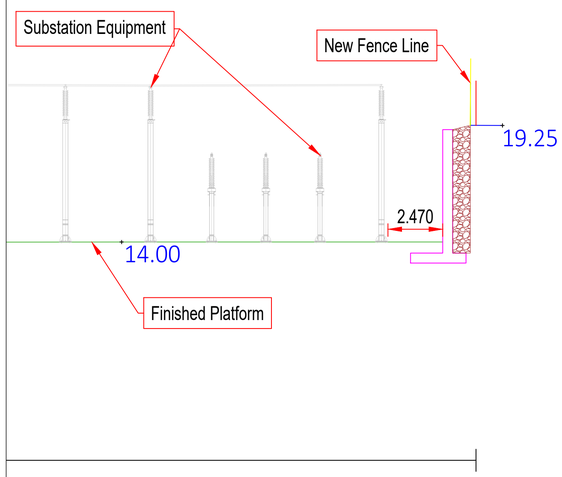

1:100 @ A1
1:200 @ A3
0 1 2 3 4 5 6 7 8 9 10 m

KEY PLAN

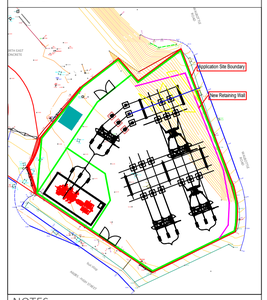

NOTES
Any equipment shown is indicative of dimensions and general appearance and may be subject to minor amendments by the manufacturer or supplier

LEGEND

REVISIONS

REV	REVISION NOTES/COMMENTS					
	DRAWN BY	DATE	CHECKED BY	DATE	APPROVED BY	DATE
P02	UPDATED VERSION					
	SS	04/02/25	xx	xx	xx	xx
P01	INITIAL VERSION					
	CL	14/02/24	xx	xx	xx	xx

fig power
firm, flexible energy

CLICK TEXT AND SELECT REQUIRED ADDRESS FROM DROP DOWN MENU

CLIENT
FIG POWER

PROJECT
NEWBURN
BATTERY ENERGY STORAGE PROJECT

TITLE
Retaining Wall Construction Sequence - Substation

FIG PROJECT NO.	SCALE @ A1	PAGE NO.
29911	1:100	X:XXX

STATUS DESCRIPTION	STATUS
FOR INFORMATION	S2

DRAWING NO. (PROJECT CODE-ORIGINATOR-ZONE-LEVEL-TYPE-ROLE-NUMBER) | REVISION