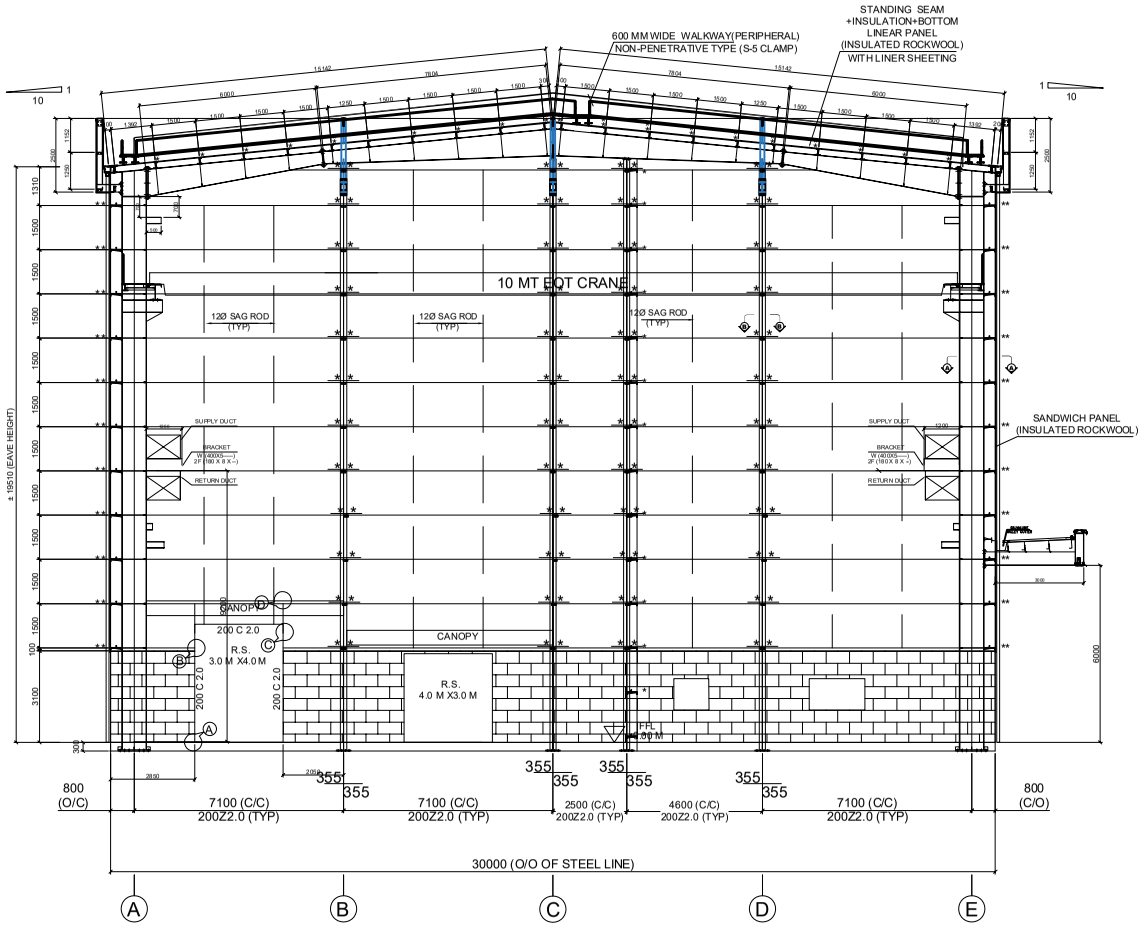

ENDWALL FRAMING ELEVATION F.L. - 11

** - DENOTES DOUBLE SIDED FLANGE BRACE

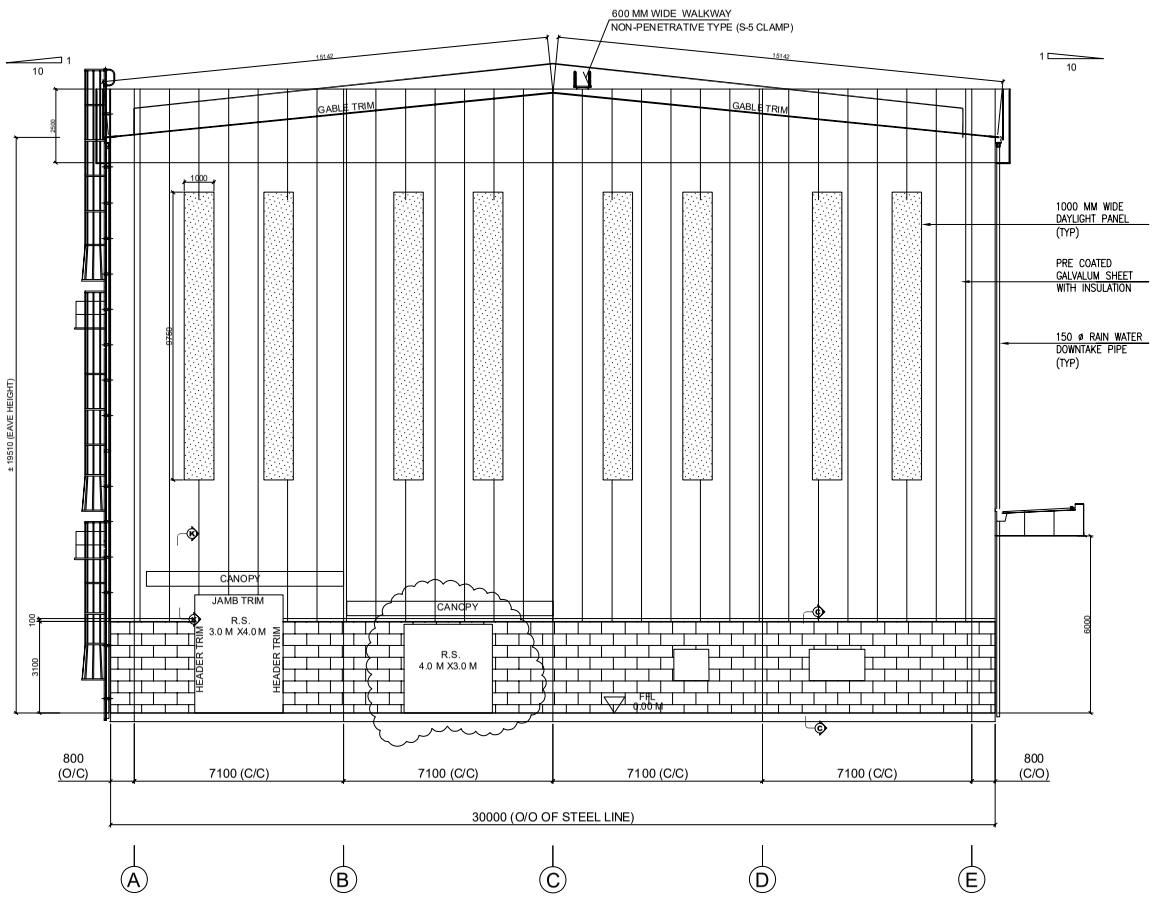

ENDWALL SHEETING ELEVATION F.L. - 11

0.5 MM THICK COLOR COATED PANLE

NOTE : AS PER ARCHITECTURAL DWG AR-1021

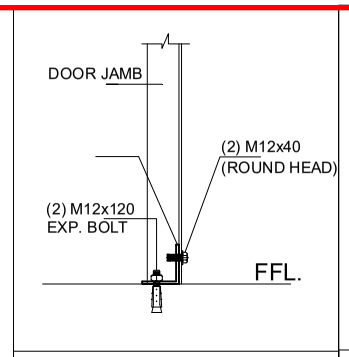

DETAIL- A
JAMB BASE CONN. DETAIL

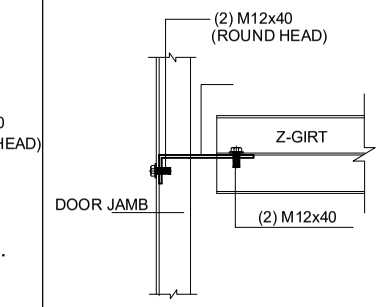

DETAIL- B
Z-GIRT TO DOOR JAMB CONN. DETAIL

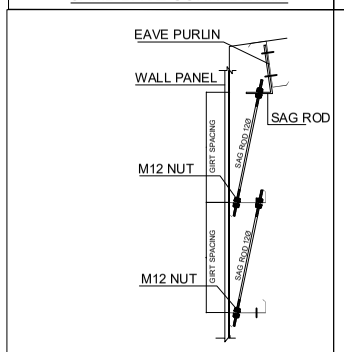

SAG ROD DETAIL @ WALL

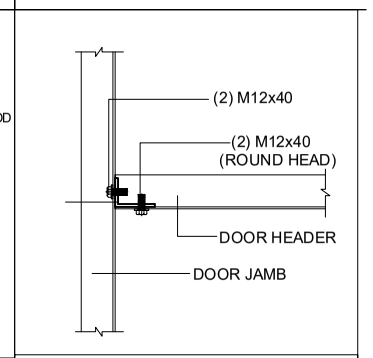

DETAIL- C
DOOR HEADER TO DOOR JAMB
CONN. DETAIL

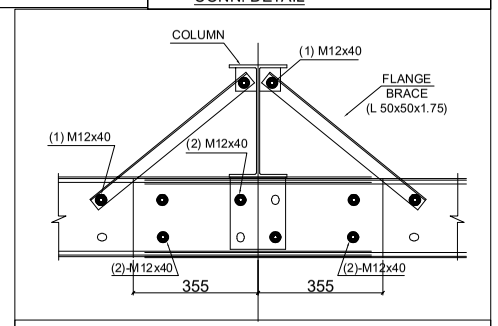

SEC-A-A:-GIRT LAP DETAIL (SHORT LAP)

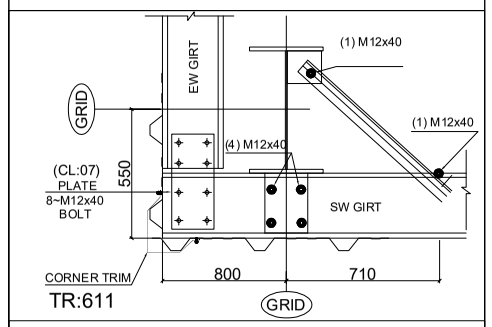

SEC-B-B:-(GIRT CONNECTION DETAIL @ CORNER)

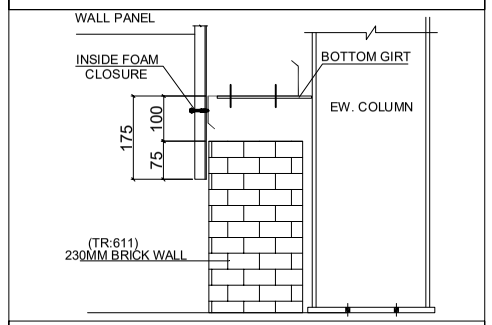

SEC-C-C:-DRIP TRIM DETAIL (TYP)

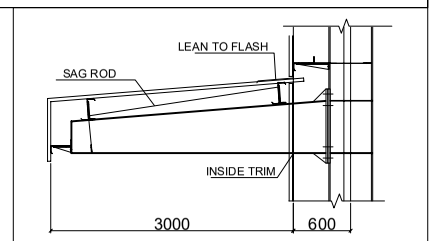

DETAILS - (K-K)