BOLT SCHEDULE				
CONN	QTY	SIZE	LENGTH	PL. SIZE
H1	4+2+4	M30	120	350x40
H2	4+4	M20	75	300x16
S1	4+4	M24	90	300x25
S2	4+2+4	M24	90	250x25

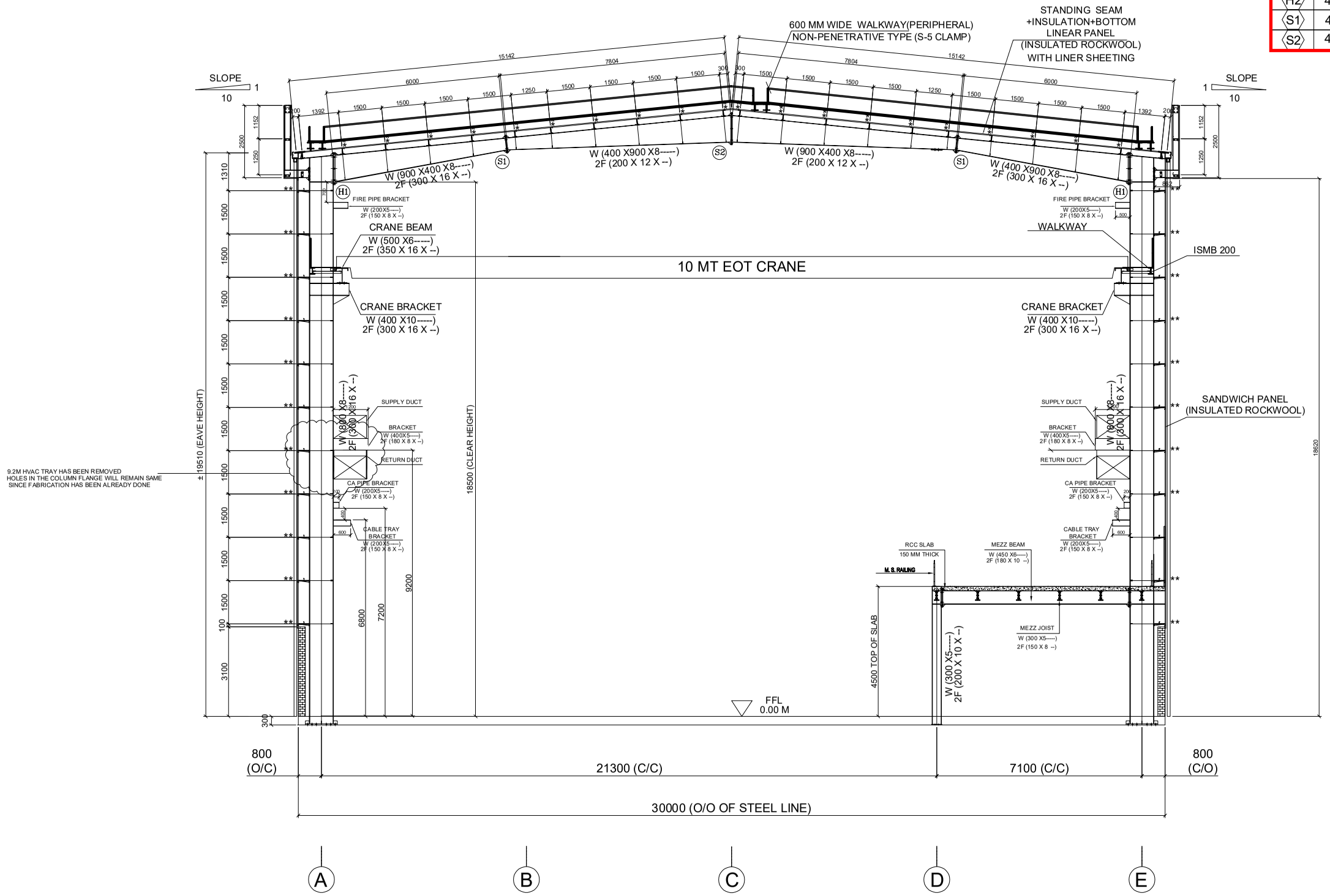

RIGID FRAME ELEVATION F.L. - 5

** - DENOTES DOUBLE SIDED FLANGE BRACE

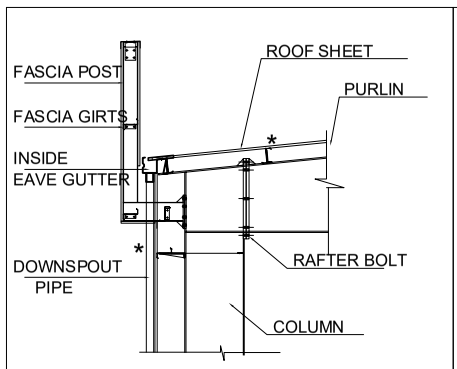

DETAIL- H1 & H2

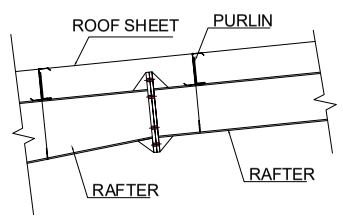

DETAIL- S1

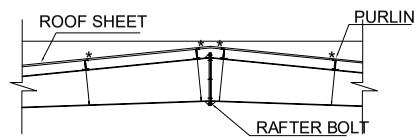

DETAIL- S2

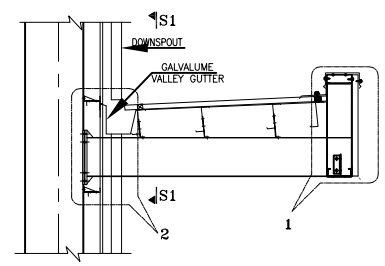

REVERSE CANOPY DETAIL WITH SOFFIT