Laparoscopy PCNL-TUR Pack (93501 M2)

No.	Name	Quantity	Size	Material
1	Main Drape	1	345x250	BIPLEX with absorbent reinforcement, incise film, and adhesive
2	Instrument Table Cover	1	190x140	Blue PE with absorbent reinforcement
3	Standard Gown	2	XL	SMS
4	Hand Towel	3	40x30	Extra soft non-woven

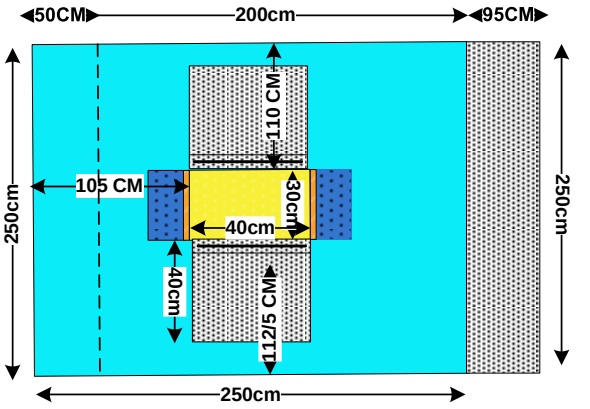

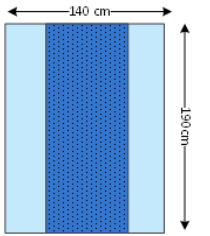

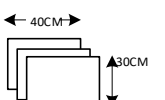

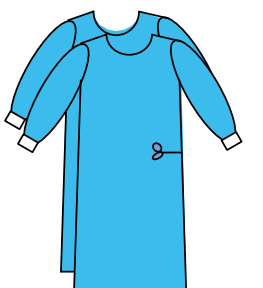

XL x 2