AINSWORTH COMMUNITY PARK PROJECT THOMPSON FALLS, MONTANA

COORDINATES:

BASIS OF BEARINGS:GRID NORTH OF MONTANA STATE PLANE COORDINATE SYSTEM - NAD83(2011)(EPOCH 2010.0000)

HORIZONTAL DATUM AND COORDINATES: NAD83(2011)(EPOCH 2010.0000), MONTANA STATE PLANE COORDINATES AT GROUND

VERTICAL DATUM: NAVD88 FROM OPUS SOLUTION USING GEOID 12B

SITE BENCHMARK AVAILBLE UPON REQUEST FROM WGM GROUP.

SUMMARY SITE MASTER PLAN
NO SCALE

SITE VICINITY PLAN
NO SCALE

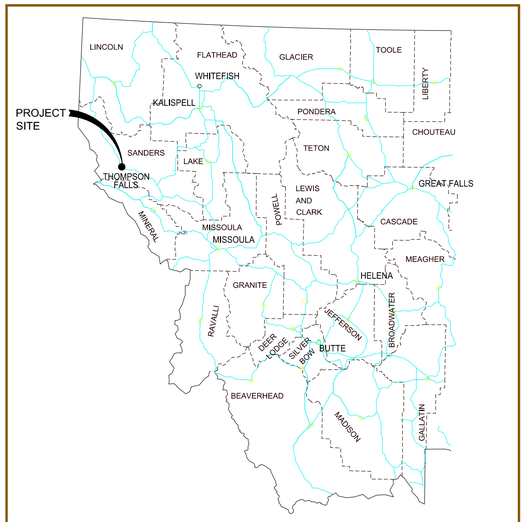

LOCATION MAP - THOMPSON FALLS
NO SCALE

IMPROVEMENTS SHALL BE CONSTRUCTED AND TESTED IN ACCORDANCE WITH THE LATEST EDITION OF STANDARDS FOR DESIGN AND CONSTRUCTION FOR THE CITY OF THOMPSON FALLS, MONTANA AND THE MONTANA PUBLIC WORKS STANDARD SPECIFICATIONS. THE CONSTRUCTION PLANS ARE INTENDED TO WORK IN CONJUNCTION WITH THE ABOVE STANDARDS.

811 Know what's below. Call before you dig.

WGM GROUP, INC. ASSUMES NO RESPONSIBILITY FOR EXISTING UTILITY LOCATIONS (HORIZONTAL AND VERTICAL). THE EXISTING UTILITIES SHOWN ON THIS DRAWING HAVE BEEN PLOTTED FROM THE BEST AVAILABLE INFORMATION. IT IS, HOWEVER, THE RESPONSIBILITY OF THE CONTRACTOR TO FIELD VERIFY THE LOCATION OF ALL UTILITIES PRIOR TO THE COMMENCEMENT OF ANY CONSTRUCTION ACTIVITIES.

CALL 2-BUSINESS DAYS IN ADVANCE BEFORE YOU DIG, GRADE, OR EXCAVATE FOR THE MARKING OF UNDERGROUND MEMBER UTILITIES.

Sheet Index

See Note regarding disposition of existing sprinkler heads prior to beginning construction work on this project on Sheet 6, Irrigation Plan - Demolition.

WGM GROUP
WWW.WGMGROUP.COM

REGISTERED LANDSCAPE ARCHITECT
Bruce F. Luiz
Lic. No. 73
Signature
6-30-20
Exp. Date
State of Montana

PROJECT COVER SHEET
AINSWORTH PARK MASTER PLAN
THOMPSON FALLS, MONTANA

REVISIONS:

NO.	DESCRIPTION	DATE

PROJECT: 17-07-25
LAYOUT: D SIZE
SURVEYED: KLM/RG
DESIGN: BFL
DRAFT: BFL
APPROVE: –
DATE:
SEPT 6, 2019

FILE: W:\Projects\170725\CAD Data\Survey\170725 BASE E.dwg

Irrigation Demolition Note:

All existing Rainbird Rotary Heads have been removed by the City of Thompson Falls for future use following park construction. Existing 1" laterals remain with head swing-joints for future adjustment and use . Heads shall be re-installed on existing swing-joints upon completion of final grading and prior to seeding of grass areas.

See Sheets 6-7 for additional irrigation demolition and construction plans and notes.

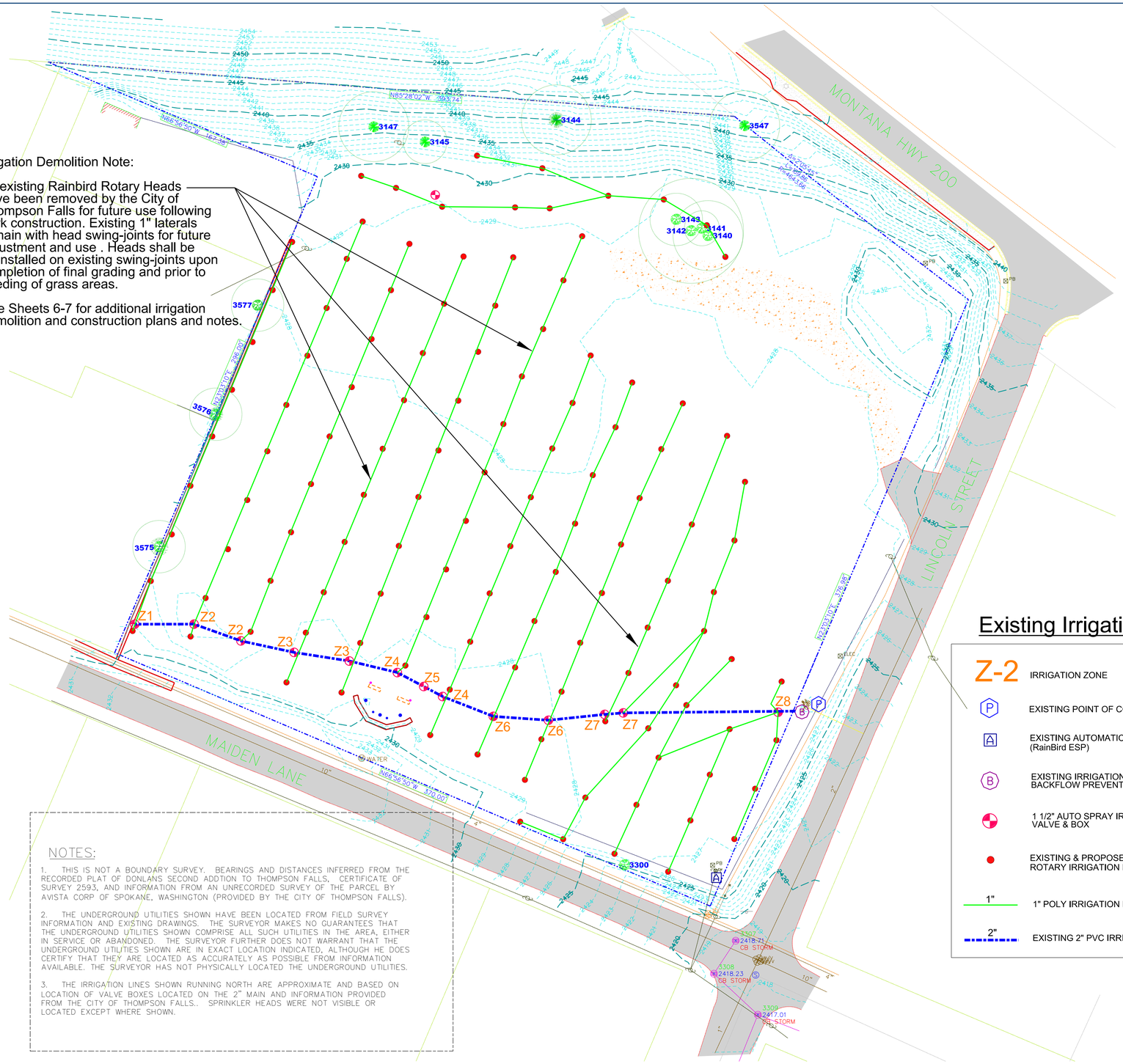

NOTES:

1. THIS IS NOT A BOUNDARY SURVEY. BEARINGS AND DISTANCES INFERRED FROM THE RECORDED PLAT OF DONLANS SECOND ADDTION TO THOMPSON FALLS, CERTIFICATE OF SURVEY 2593, AND INFORMATION FROM AN UNRECORDED SURVEY OF THE PARCEL BY AVISTA CORP OF SPOKANE, WASHINGTON (PROVIDED BY THE CITY OF THOMPSON FALLS).

2. THE UNDERGROUND UTILITIES SHOWN HAVE BEEN LOCATED FROM FIELD SURVEY INFORMATION AND EXISTING DRAWINGS. THE SURVEYOR MAKES NO GUARANTEES THAT THE UNDERGROUND UTILITIES SHOWN COMPRISE ALL SUCH UTILITIES IN THE AREA, EITHER IN SERVICE OR ABANDONED. THE SURVEYOR FURTHER DOES NOT WARRANT THAT THE UNDERGROUND UTILITIES SHOWN ARE IN EXACT LOCATION INDICATED, ALTHOUGH HE DOES CERTIFY THAT THEY ARE LOCATED AS ACCURATELY AS POSSIBLE FROM INFORMATION AVAILABLE. THE SURVEYOR HAS NOT PHYSICALLY LOCATED THE UNDERGROUND UTILITIES.

3. THE IRRIGATION LINES SHOWN RUNNING NORTH ARE APPROXIMATE AND BASED ON LOCATION OF VALVE BOXES LOCATED ON THE 2" MAIN AND INFORMATION PROVIDED FROM THE CITY OF THOMPSON FALLS.. SPRINKLER HEADS WERE NOT VISIBLE OR LOCATED EXCEPT WHERE SHOWN.

Existing Irrigation Key

Z-2	IRRIGATION ZONE
P	EXISTING POINT OF CONNECTION
A	EXISTING AUTOMATIC CONTROLLER (RainBird ESP)
B	EXISTING IRRIGATION BACKFLOW PREVENTER
	1 1/2" AUTO SPRAY IRRIGATION VALVE & BOX
	EXISTING & PROPOSED RAINBIRD 5004 ROTARY IRRIGATION HEADS
1"	1" POLY IRRIGATION LATERAL
2"	EXISTING 2" PVC IRRIGATION MAIN

LEGEND

- SUBJECT PROPERTY BOUNDARY
- RIGHT-OF-WAY LINE
- INTERIOR/ADJACENT LOT LINE
- CURB AND GUTTER
- SIDEWALK
- EXTERIOR BUILDING WALL
- WATER MAIN
- WATER SERVICE
- SANITARY SEWER MAIN
- AERIAL POWER LINE
- BURIED ELECTRIC LINE
- BURIED COMMUNICATION LINE
- FENCE
- CONTOUR (1 FOOT INTERVAL)
- WATER VALVE
- WATER SHUT-OFF
- SANITARY SEWER MANHOLE
- DRAINAGE SUMP
- UTILITY POLE
- GUY WIRE
- LIGHT POLE
- ELECTRIC PEDESTAL
- TELEPHONE PEDESTAL
- EVERGREEN TREE
- DECIDUOUS TREE
- SIGN
- FOUND 1/2 in. REBAR WITH YELLOW PLASTIC CAP (HAGEDORN 15069)
- Design of Record Location of IR Heads & Laterals

BASIS OF BEARINGS: GRID NORTH OF MONTANA STATE PLANE COORDINATE SYSTEM - NAD83(2011)(EPOCH 2010.0000)

HORIZONTAL DATUM AND COORDINATES: NAD83(2011)(EPOCH 2010.0000), MONTANA STATE PLANE COORDINATES AT GROUND

VERTICAL DATUM: NAVD88 FROM OPUS SOLUTION USING GEOID 12B

EXISTING TREE TABLE	
POINT#	DESCRIPTION
3140	TREE2 20" ELM 40' DRIP
3300	TREE2 10" MAPLE 25' DRIP
3141	TREE2 12" ASH 20' DRIP
3142	TREE2 14" ELM 40' DRIP
3143	TREE2 16" ELM 30' DRIP
3144	TREE1 38" PINE 40' DRIP
3145	TREE1 19" PINE 25' DRIP
3147	TREE1 29" PINE 40' DRIP
3547	TREE1 DBL 2@ 20" PINE 40' DRIP
3575	TREE2 MULTI STEM CHERRY 50' DRIP
3576	TREE2 24"MAPLE 40' DRIP
3577	TREE2 20"MAPLE 30' DRIP

GRID NORTH

30 0 30 60

SCALE – FEET

WGM GROUP
WWW.WGMGROUP.COM

SITE SURVEY PLAN
AINSWORTH PARK MASTER PLAN
THOMPSON FALLS, MONTANA

REVISIONS:

NO.	DESCRIPTION	DATE

PROJECT: 17-07-25
LAYOUT: D SIZE
SURVEYED: KLM/RG
DESIGN: –
DRAFT: KLM
APPROVE: –
DATE:

SEPT 6, 2019

SHEET 2 OF 21

FILE: W:\Projects\170725\CAD Data\Survey\170725 BASE E.dwg

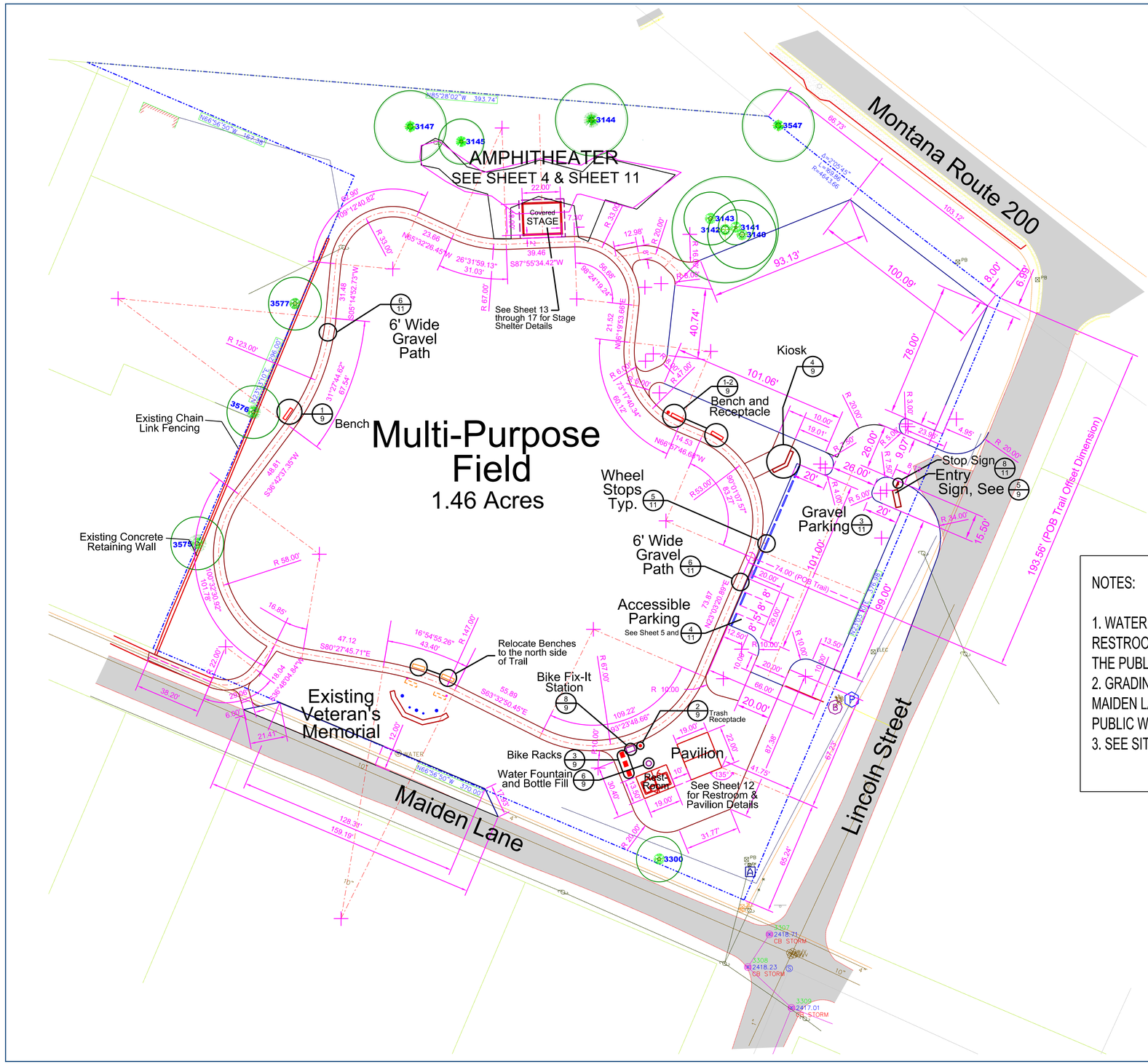

NOTES:

1. WATER AND SEWER SERVICES TO THE NEW RESTROOM STRUCTURE SHALL BE PROVIDED BY THE PUBLIC WORKS DEPARTMENT.
2. GRADING AND GRAVEL INSTALLATION FOR MAIDEN LANE SHALL BE PERFORMED BY THE PUBLIC WORKS DEPARTMENT (NIC)
3. SEE SITE CONSTRUCTION DETAILS ON SHEET 11.

WGM GROUP
WWW.WGMGROUP.COM

REGISTERED LANDSCAPE ARCHITECT
Bruce F. Lutz
Lic. No. 73
Signature
6-30-20
Exp. Date
State of Montana

SITE LAYOUT PLAN
AINSWORTH PARK MASTER PLAN
THOMPSON FALLS, MONTANA

REVISIONS:

NO.	DESCRIPTION	DATE

PROJECT: 17-07-25
LAYOUT: D SIZE
SURVEYED: KLM/RG
DESIGN: BFL
DRAFT: BFL
APPROVE: –
DATE:

SEPT 6, 2019

SHEET 3 OF 21

FILE: W:\Projects\17072525\CAD Data\Survey\170725 BASE E.dwg

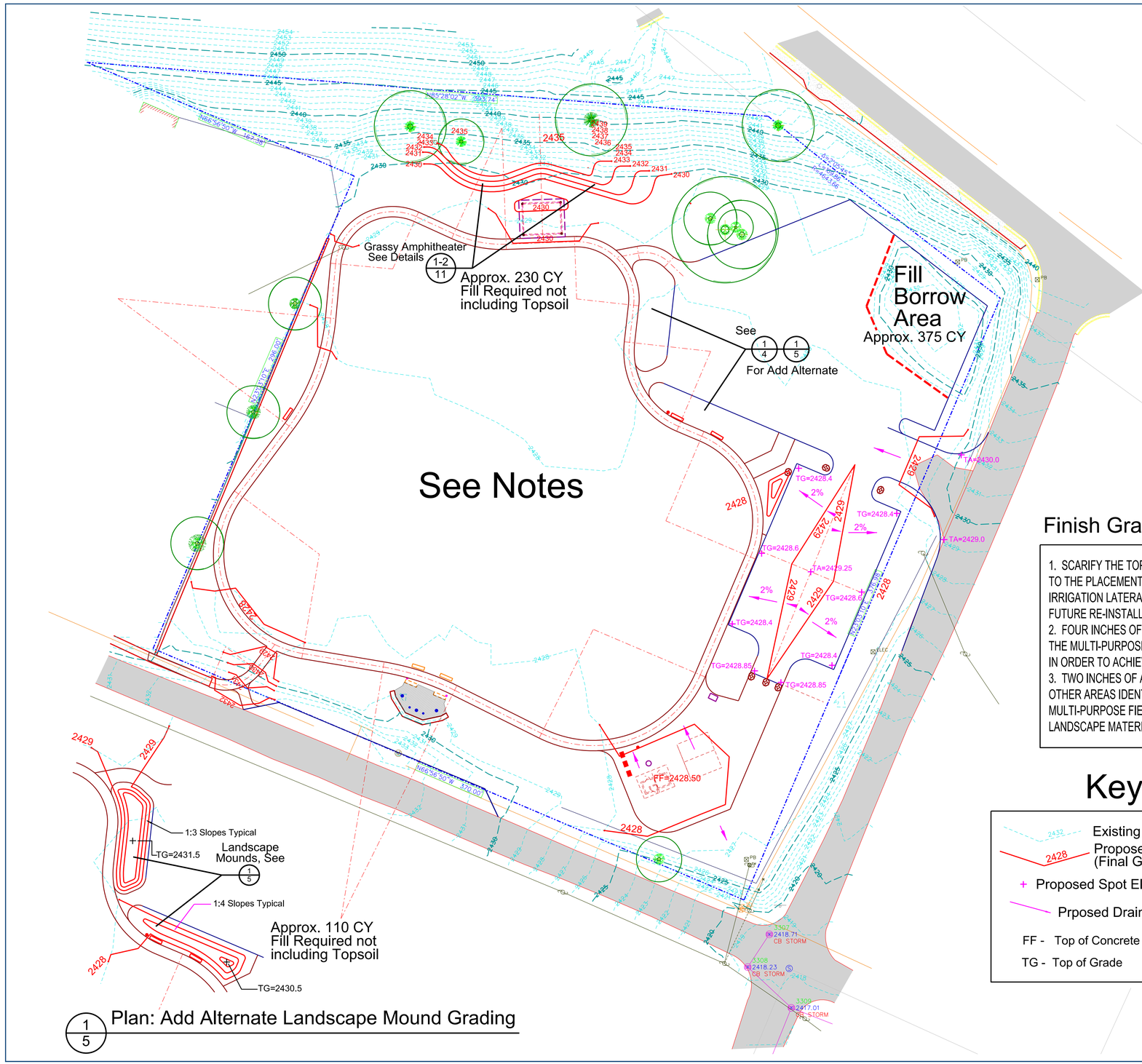

1/5 Plan: Add Alternate Landscape Mound Grading

Finish Grade and Topsoil Notes:

1. SCARIFY THE TOP SURFACE OF AREAS TO BE RE-SEEDED PRIOR TO THE PLACEMENT OF TOPSOIL TAKING CARE NOT TO DISTURB IRRIGATION LATERALS AND SWING-JOINTS THAT WILL REMAIN FOR FUTURE RE-INSTALLATION OF ROTARY IRRIGATION HEADS.
2. FOUR INCHES OF APPROVED TOPSOIL SHALL BE PLACED OVER THE MULTI-PURPOSE FIELD AREA AND AMPHITHEATER SEATING IN ORDER TO ACHIEVE FINAL FINISH GRADE PRIOR TO GRASS SEEDING
3. TWO INCHES OF APPROVED TOPSOIL SHALL BE PLACED ON ALL OTHER AREAS IDENTIFIED AS SEEDING AREAS OUTSIDE OF THE MULTI-PURPOSE FIELD. SEE SHEET 5 FOR IDENTIFICATION OF LANDSCAPE MATERIALS.

Key

- 2432 Existing Contour
- 2428 Proposed Contour (Final Grade)
- + Proposed Spot Elevation
- Prposed Drainage Direction
- FF - Top of Concrete Slab
- TG - Top of Grade

GRID NORTH

30 0 30 60

SCALE - FEET

WGM GROUP
WWW.WGMGROUP.COM

REGISTERED LANDSCAPE ARCHITECT
Bruce F. Lutz
Lic. No. 73
Signature
6-30-20
Exp. Date
State of Montana

GRADING PLAN
AINSWORTH PARK MASTER PLAN
THOMPSON FALLS, MONTANA

REVISIONS:

NO.	DESCRIPTION	DATE

PROJECT: 17-07-25
LAYOUT: D SIZE
SURVEYED: KLM/RG
DESIGN: BFL
DRAFT: BFL
APPROVE: -
DATE:

SEPT 6, 2019

SHEET 4 OF 21

FILE: W:\Projects\170725\CAD Data\Survey\170725 BASE E.dwg

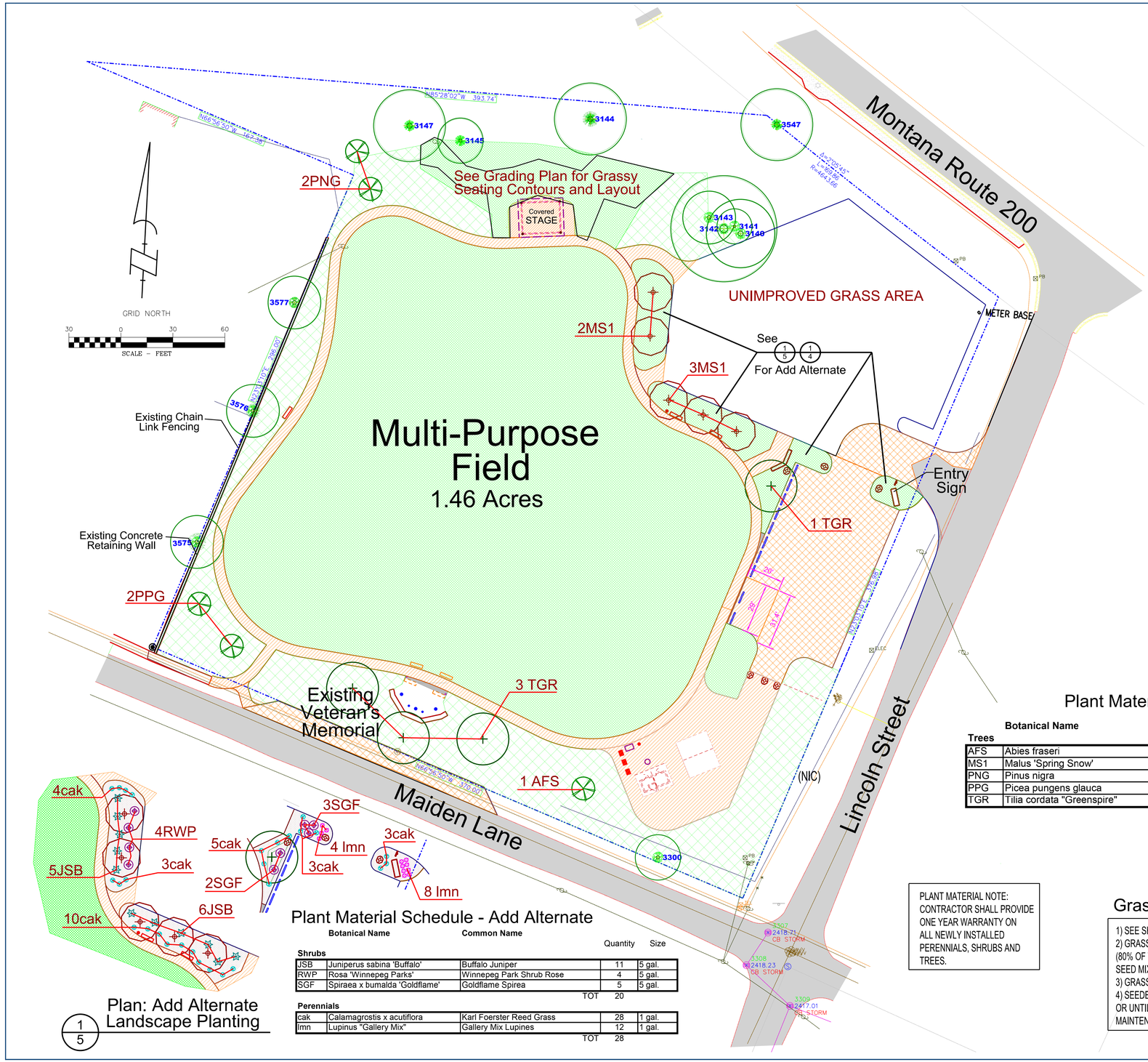

Plan: Add Alternate Landscape Planting

1/5

Plant Material Schedule - Add Alternate

	Botanical Name	Common Name	Quantity	Size
Shrubs				
JSB	Juniperus sabina 'Buffalo'	Buffalo Juniper	11	5 gal.
RWP	Rosa 'Winnepeg Parks'	Winnepeg Park Shrub Rose	4	5 gal.
SGF	Spiraea x bumalda 'Goldflame'	Goldflame Spirea	5	5 gal.
		TOT	20	
Perennials				
cak	Calamagrostis x acutiflora	Karl Foerster Reed Grass	28	1 gal.
lmn	Lupinus "Gallery Mix"	Gallery Mix Lupines	12	1 gal.
		TOT	28	

Landscape Materials Key

3PFP — Plant Type
Plant Quantity — Plant Symbol

- 69,938 SF — Drill Seeded Grass 4" Topsoil (See Note Below)
- 21,511 SF — Drill Seeded Grass 2" Topsoil (See Note Below)
- 3650 SF — Cedar Shredded Mulch w/ Weed Barrier Fabric SEE ADD ALTERNATE
- 8,230 SF — 3/4" Minus Gravel Parking Surface
- 12,687 SF — 3/8" Minus Gravel Walking Surface
- Deciduous Tree
- Coniferous Tree
- Small Flowering Tree
- Juniper
- Shrub
- Perennial Flower
- Ornamental Grass
- Aluminum Landscape Edging
- Landscape Boulder 3/4 to 1 Ton Typical (5 Total)

Plant Material Schedule

	Botanical Name	Common Name	Quantity	Size
Trees				
AFS	Abies fraseri	Fraser Fir	1	8' hgt
MS1	Malus 'Spring Snow'	Spring Snow Crabapple	5	2.25" cal.
PNG	Pinus nigra	Austrian Pine	2	7-8' hgt
PPG	Picea pungens glauca	Colorado Blue Spruce	2	7-8' hgt
TGR	Tilia cordata "Greenspire"	Greenspire Little-Leaf Linden	4	2.25 cal.
		TOT	14	

PLANT MATERIAL NOTE:
CONTRACTOR SHALL PROVIDE ONE YEAR WARRANTY ON ALL NEWLY INSTALLED PERENNIALS, SHRUBS AND TREES.

Grass Seeding Notes:

1) SEE SHEET 4 (GRADING) FOR TOPSOIL NOTES.
2) GRASS SEED MIX SHALL CONSIST OF THREE APPROVED KENTUCKY BLUE GRASSES (80% OF TOTAL SEED MIX) AND ONE VARIETY OF PERENNIAL RYEGRASS (20% OF TOTAL SEED MIX) AT A MINUMUM BROADCAST RATE OF 5 POUNDS PER 1000 SQUARE FEET.
3) GRASS SEED SHALL BE DRILLED INTO FINAL GRADE SURFACE.
4) SEEDED AREAS SHALL BE WATERED AND MAINTAINED THROUGH THE FIRST SEASON OR UNTIL THE CITY OF THOMPSON FALLS ACCEPTS THE FIELD AND TAKES OVER MAINTENANCE.

WGM GROUP
WWW.WGMGROUP.COM

REGISTERED LANDSCAPE ARCHITECT
Bruce F. Luiz
Lic. No. 73
Signature
6-30-20
Exp. Date
State of Montana

LANDSCAPE PLAN
AINSWORTH PARK MASTER PLAN
THOMPSON FALLS, MONTANA

REVISIONS:

NO.	DESCRIPTION	DATE

PROJECT: 17-07-25
LAYOUT: D SIZE
SURVEYED: KLM/RG
DESIGN: BFL
DRAFT: BFL
APPROVE: –
DATE:

SEPT 6, 2019

SHEET 5 OF 21

FILE: W:\Project\17072\5\CAD Data\Survey\170725 BASE E.dwg

Irrigation Demolition Notes:

All existing Rainbird Rotary Heads have been removed by the City of Thompson Falls for future use following park construction. Existing 1" laterals remain with head swing-joints for future adjustment and use . Heads shall be re-installed on existing swing-joints upon completion of final grading and prior to seeding of grass areas.

See Sheets 6-7 for additional irrigation demolition and construction plans and notes.

The City of Thompson Falls shall flag all existing irrigation head locations prior to the beginning of construction.
It is the contractor's responsibility to protect the head locations and flagging during the course of construction and until heads are re-installed.

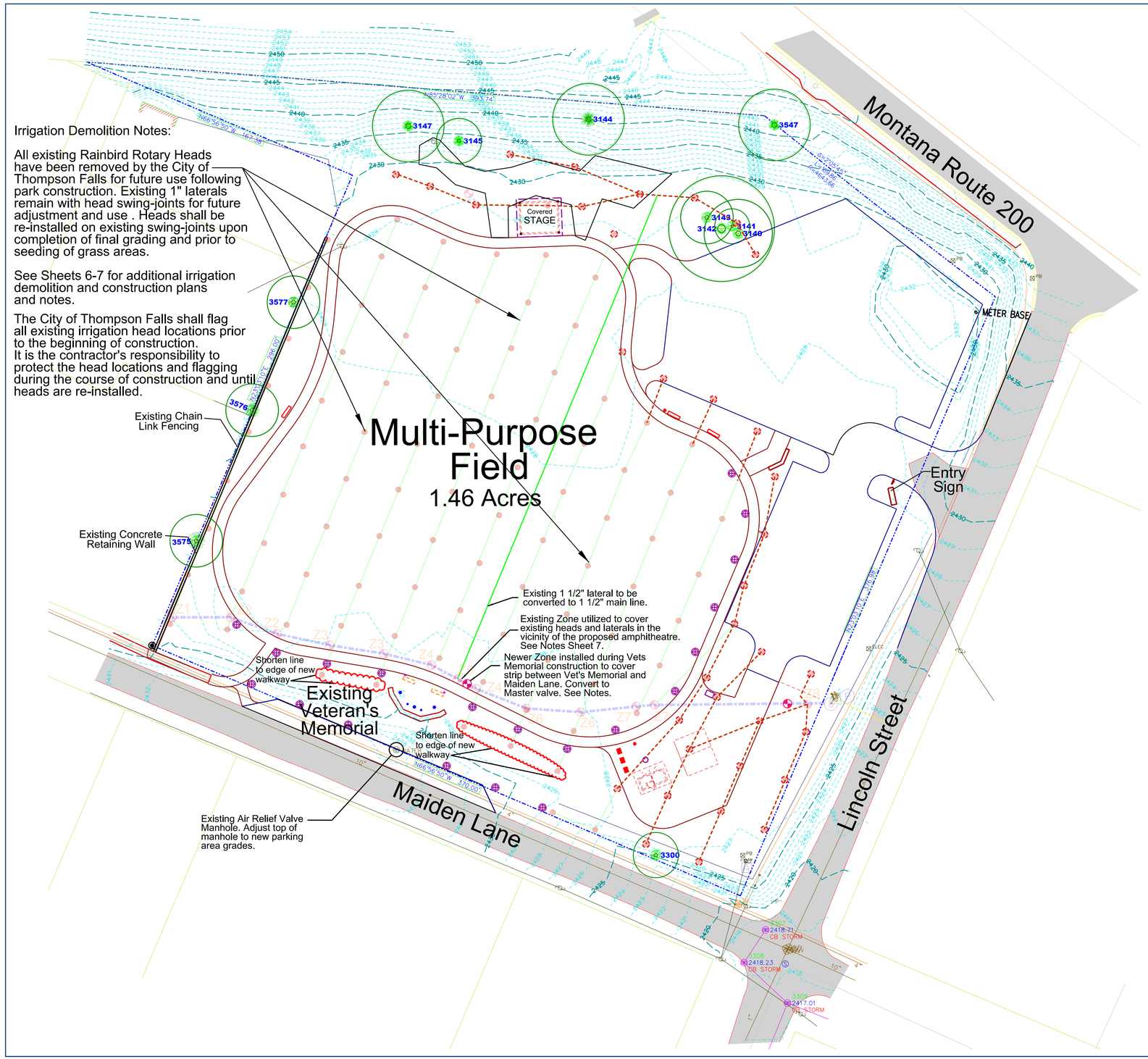

Irrigation Key

Z-2	IRRIGATION ZONE
P	POINT OF CONNECTION
A	EXISTING AUTOMATIC CONTROLLER
B	IRRIGATION BACKFLOW PREVENTER
	EXISTING 1" AUTO SPRAY IRRIGATION VALVE & BOX
C	QUICK COUPLER
	FORMER & FUTURE RE-INSTALL LOCATION FORROTARY SPRINKLER HEADS
	RE-LOCATED RAINBIRD 5004 ROTARY IRRIGATION HEADS (31 Available)
	ABANDON AND CAP EXISTING LATERAL IF PART OF ACTIVE ZONE

Irrigation Demolition Notes:

All existing Rainbird Rotary Heads have been removed by the City of Thompson Falls for future use following park construction. Existing 1" laterals remain with head swing-joints for future adjustment and use . Heads shall be re-installed on existing swing-joints upon completion of final grading and prior to seeding of grass areas.

See Sheets 6-7 for additional irrigation demolition and construction plans and notes.

The City of Thompson Falls shall flag all existing irrigation head locations prior to the beginning of construction.
It is the contractor's responsibility to protect the head locations and flagging during the course of construction and until heads are re-installed.

GRID NORTH

30 0 30 60
SCALE – FEET

WGM GROUP
WWW.WGMGROUP.COM

REGISTERED LANDSCAPE ARCHITECT
Bruce F. Lutz
Lic. No. 73
Signature
6-30-20
Exp. Date
State of Montana

IRRIGATION DEMOLITION PLAN
AINSWORTH PARK MASTER PLAN
THOMPSON FALLS, MONTANA

REVISIONS:

NO.	DESCRIPTION	DATE

PROJECT: 17-07-25
LAYOUT: D SIZE
SURVEYED: KLM/RG
DESIGN: BFL
DRAFT: BFL
APPROVE: –
DATE:

SEPT 6, 2019

FILE: W:\Projects\170725\CAD Data\Survey\170725 BASE E.dwg

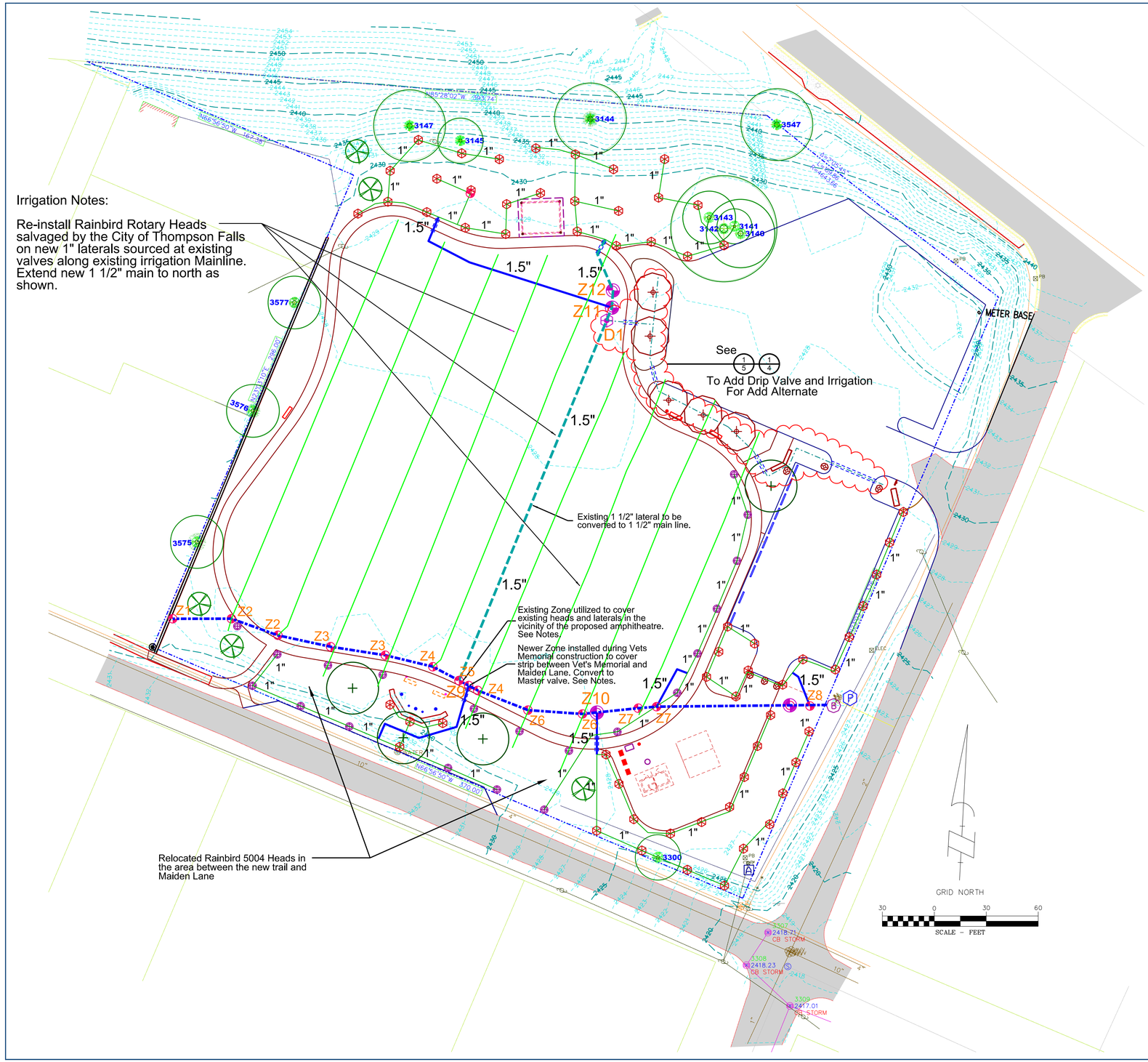

Irrigation Key

Z-2	ROTARY HEAD IRRIGATION ZONE
D-1	DRIP ZONE
P	EXISTING POINT OF CONNECTION
A	EXISTING AUTOMATIC CONTROLLER (RainBird ESP)
B	EXISTING IRRIGATION BACKFLOW PREVENTER
	EXISTING AUTO SPRAY IRRIGATION VALVE & BOX
	NEW 1.5" AUTO SPRAY IRRIGATION VALVE & BOX
	NEW 1" AUTO DRIP IRRIGATION VALVE & BOX
C	QUICK COUPLER
	EXISTING RAINBIRD 5004 ROTARY IRRIGATION HEADS REMOVED BY CITY
	RE-LOCATED RAINBIRD 5004 ROTARY IRRIGATION HEADS (31 Available)
	NEW RainBird R-Van 24 MATCHED PRECIPITATION ROTARY NOZZLE HEAD 17-24' R @45psi
2"	EXISTING 2" PVC IRRIGATION MAIN
1 1/2"	EXISTING 1 1/2" PVC IRRIGATION LATERAL TO BE CONVERTED TO FUTURE 1 1/2" MAIN
1 1/2"	NEW 1 1/2" PVC IRRIGATION LATERAL
1"	1" POLY IRRIGATION LATERAL TO BE USED FOR FUTURE IRRIGATION
1"	1" POLY IRRIGATION DRIP IRRIGATION SUPPLY
	DRIP IRRIGATED AREAS
	4" Sch. 40 IRRIGATION SLEEVING

Notes:

1) The original installation of the existing irrigation was constructed 4 years ago by Kohler Sprinklers. To the best of our knowledge, Zone 5 was sized as a 1 1/2" lateral (now as a proposed Main) to serve the north portion of the site.

2) Please note that all existing heads were installed with funny pipe swing joints in order to facilitate height adjustment for finish grade.
Contact Info for Dale Kohler, Kohler Sprinklers - ksprinks@hotmail.com

3) The City of Thompson Falls shall flag all existing irrigation head locations prior to the beginning of construction. It is the contractor's responsibility to protect the head locations and flagging during the course of construction and until heads are re-installed.

WGM GROUP
WWW.WGMGROUP.COM

REGISTERED LANDSCAPE ARCHITECT
Bruce F. Lutz
Lic. No. 73
Signature
6-30-20
Exp. Date
State of Montana

PROPOSED IRRIGATION PLAN
AINSWORTH PARK MASTER PLAN
THOMPSON FALLS, MONTANA

REVISIONS:

NO.	DESCRIPTION	DATE

PROJECT: 17-07-25
LAYOUT: D SIZE
SURVEYED: KLM/RG
DESIGN: BFL
DRAFT: BFL
APPROVE: -
DATE:
SEPT 6, 2019

SHEET 7 OF 21

FILE: W:\Projects\170725\CAD Data\Survey\170725 BASE E.dwg

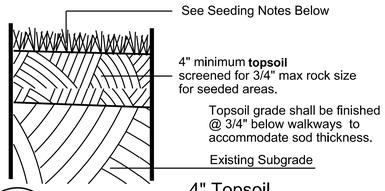

1A / 8 — 4" Topsoil Typical Section: Seeded Grass Areas

No Scale

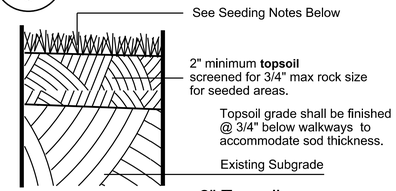

1B / 8 — 2" Topsoil Typical Section: Seeded Grass Areas

No Scale

GRASS SEEDING NOTES:
1) SEE SHEET 4 (GRADING) FOR TOPSOIL NOTES.
2) GRASS SEED MIX SHALL CONSIST OF THREE APPROVED KENTUCKY BLUE GRASSES (80% OF TOTAL SEED MIX) AND ONE VARIETY OF PERENNIAL RYEGRASS (20% OF TOTAL SEED MIX) AT A MINUMUM BROADCAST RATE OF 5 POUNDS PER 1000 SQUARE FEET.
3) GRASS SEED SHALL BE DRILLED INTO FINAL GRADE SURFACE.
4) SEEDED AREAS SHALL BE WATERED AND MAINTAINED THROUGH THE FIRST SEASON OR UNTIL THE CITY OF THOMPSON FALLS ACCEPTS THE FIELD AND TAKES OVER MAINTENANCE.

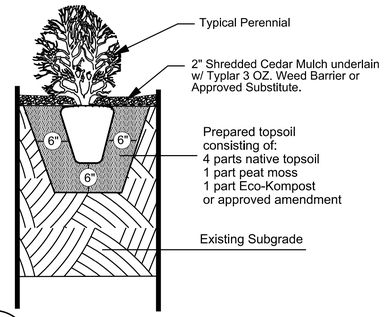

2 / 8 — Typical Section - Perennial Planters

No Scale

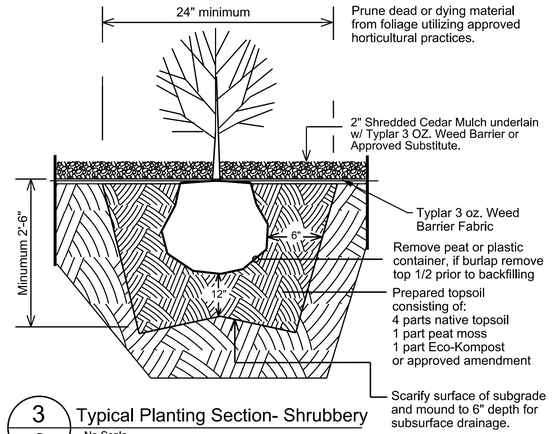

3 / 8 — Typical Planting Section- Shrubbery

No Scale

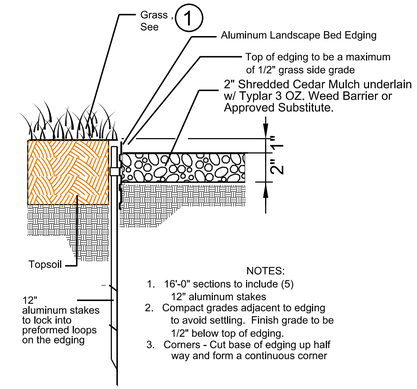

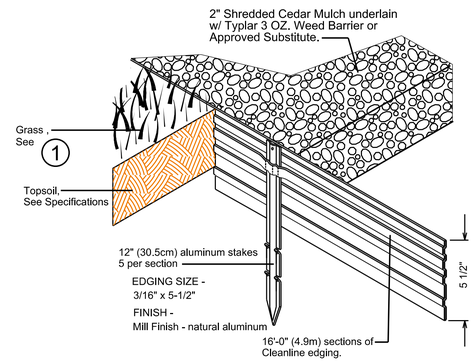

4 / 8 — Aluminum Landscape Edging

No Scale

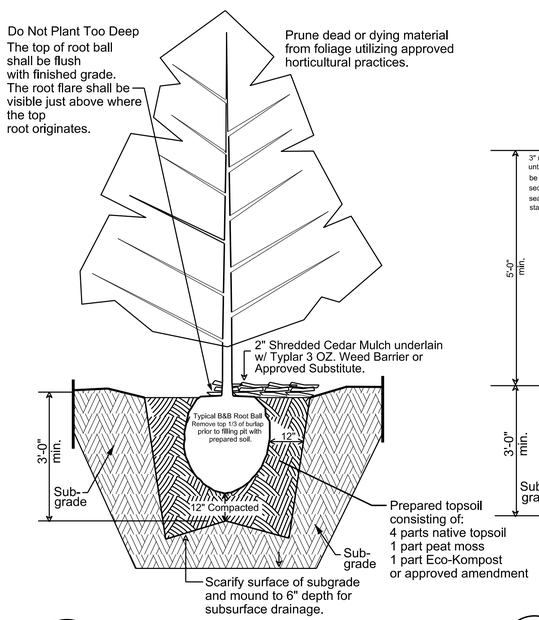

5 / 8 — Typical Planting Section: Coniferous Tree

No Scale

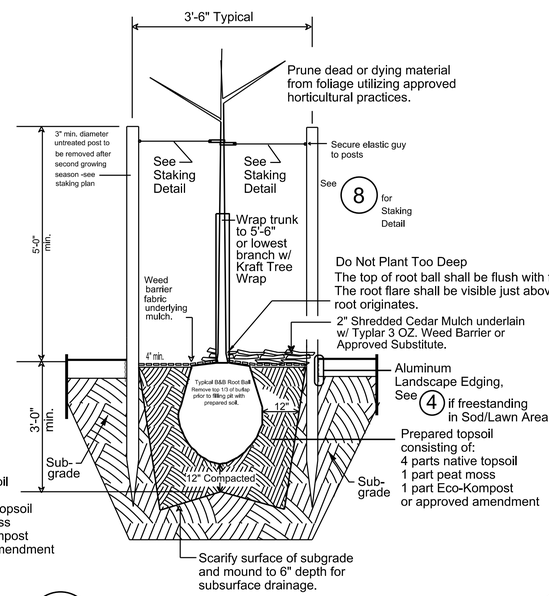

6 / 8 — Typical Planting Section: Deciduous Tree - Sod Area

No Scale

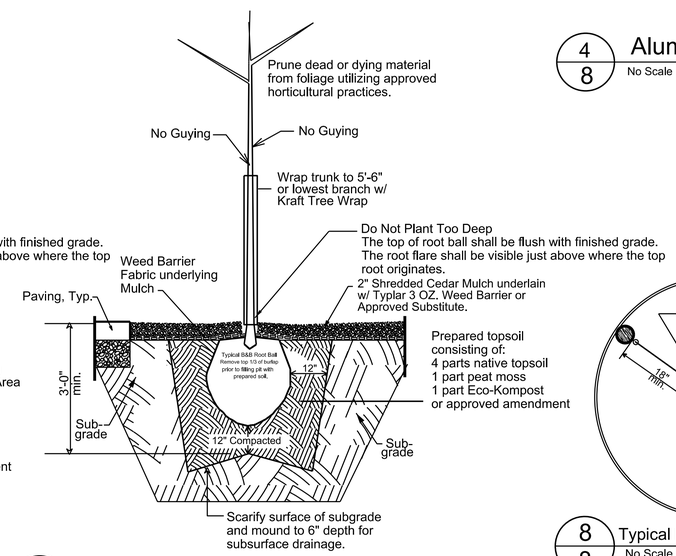

7 / 8 — Typical Planting Section: Deciduous Tree - Planting Beds

No Scale

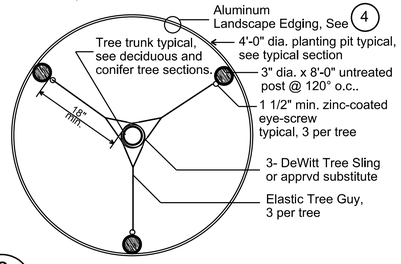

8 / 8 — Typical Plan: Tree Staking/Support

No Scale

WGM GROUP
WWW.WGMGROUP.COM

REGISTERED LANDSCAPE ARCHITECT
Bruce F. Luis
Lic. No. 73
Signature
6-30-20
Exp. Date
State of Montana

LANDSCAPE DETAILS 1
AINSWORTH PARK MASTER PLAN
THOMPSON FALLS, MONTANA

REVISIONS:

NO.	DESCRIPTION	DATE

PROJECT: 17-07-25
LAYOUT: D SIZE
SURVEYED: KLM/RG
DESIGN: BFL
DRAFT: BFL
APPROVE: –
DATE:

SEPT 6, 2019

SHEET 8 OF 21

FILE: W:\Projects\170725\CAD Data\Survey\170725 BASE E.dwg

Material and Color:
BENCH SURFACE PATTERN: SQUARE PERFORATION
BENCH COLOR: HUNTER GREEN
COLOR BENCH LEG: TEXTURED BLACK

WABASH VALLEY
505 EAST MAIN ST
SILVER LAKE, IN 46982
TOLL FREE: 1-800-253-8619
PHONE: (260) 352-2102

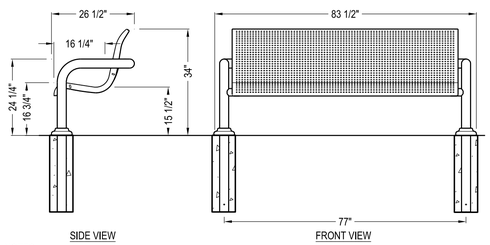

NOTES:
1. INSTALLATION TO BE COMPLETED IN ACCORDANCE WITH MANUFACTURER'S SPECIFICATIONS.
2. DO NOT SCALE DRAWING.
3. PROVIDE ITEM AS SHOWN OR APPROVED EQUAL.

1/9 URBANSCAPE POWDER COATED BENCH (WITH BACK)

CAMDEN 6' BENCH WITH BACK - INGROUND

WABASH VALLEY
505 EAST MAIN ST
SILVER LAKE, IN 46982
TOLL FREE: 1-800-253-8619
PHONE: (260) 352-2102

OR APPROVED EQUAL

Material and Color:
SURFACE PATTERN: SQUARE PERFORATION
RECEPTACLE COLOR: HUNTER GREEN
LID COLOR: TEXTURED BLACK
LID STYLE: DOME
RECEPTACLE MOUNTING: SURFACE

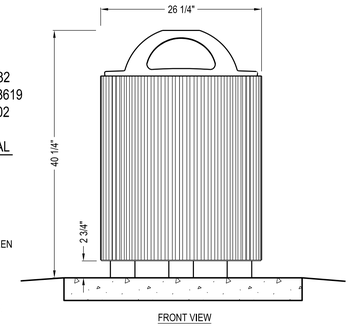

NOTES:
1. INSTALLATION TO BE COMPLETED IN ACCORDANCE WITH MANUFACTURER'S SPECIFICATIONS.
2. DO NOT SCALE DRAWING.
3. PROVIDE ITEM AS SHOWN OR APPROVED EQUAL.

2/9 URBANSCAPE POWDER COATED RECEPTACLE/ASH URNS

TRASH RECEPTACLE - SURFACE MOUNT

Material and Color:
BIKE LOOP COLOR: BLACK
MOUNTING: SURFACE

WABASH VALLEY
505 EAST MAIN ST
SILVER LAKE, IN 46982
TOLL FREE: 1-800-253-8619
PHONE: (260) 352-2102

OR APPROVED EQUAL

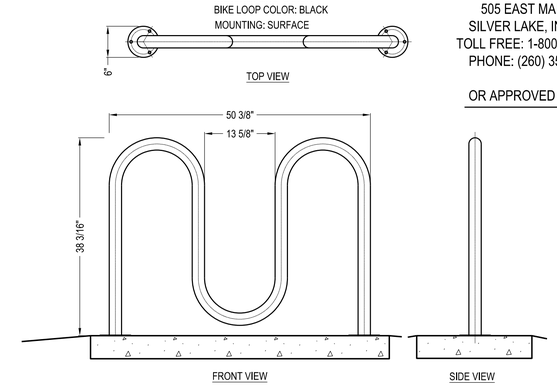

NOTES:
1. INSTALLATION TO BE COMPLETED IN ACCORDANCE WITH MANUFACTURER'S SPECIFICATIONS.
2. DO NOT SCALE DRAWING.
3. PROVIDE ITEM AS SHOWN OR APPROVED EQUAL.

3/9 URBANSCAPE POWDER COATED BIKE LOOPS/RACKS

BIKE RACK - SERPENTINE - SURFACE MOUNT

Note: Replicate Kiosk located at Wild Goose Landing at a future Date
12" concrete sonotube column bases shall be min. 36" deep from top of grade.

4/9 SCHEMATIC TYPICAL DETAIL: INFORMATION KIOSK

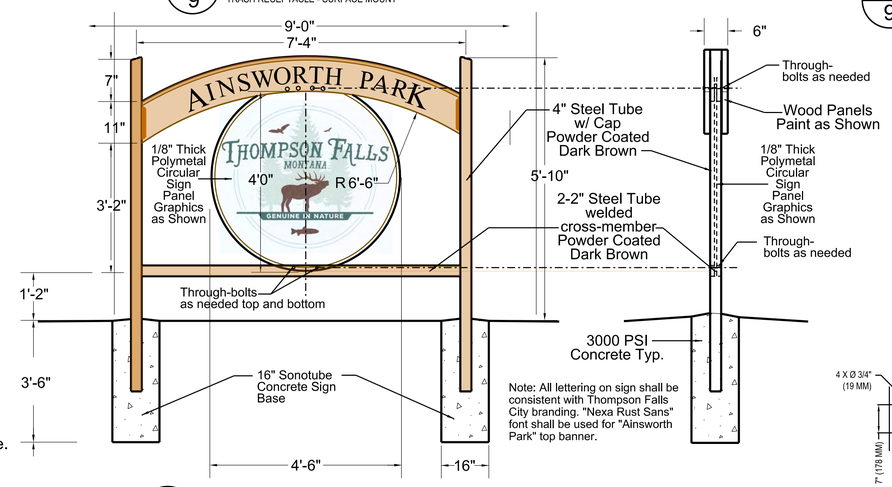

Note: All lettering on sign shall be consistent with Thompson Falls City branding. "Nexa Rust Sans" font shall be used for "Ainsworth Park" top banner.

5/9 TYPICAL ELEVATION-SECTION: PARK ENTRY SIGN

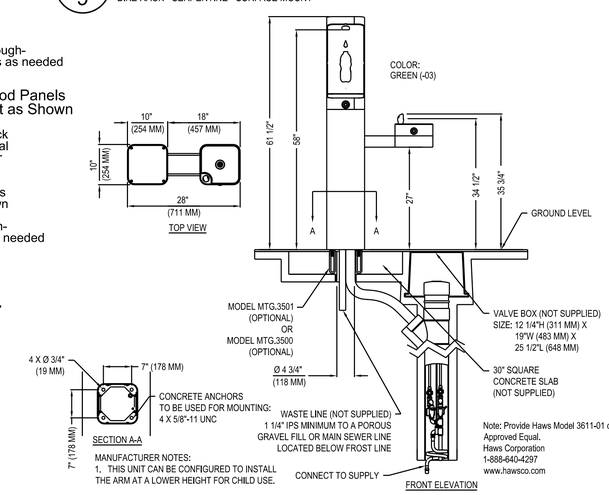

MANUFACTURER NOTES:
1. THIS UNIT CAN BE CONFIGURED TO INSTALL THE ARM AT A LOWER HEIGHT FOR CHILD USE.

Note: Provide Haws Model 3611-01 or Approved Equal.
Haws Corporation
1-888-640-4297
www.hawsco.com

6/9 TYPICAL DETAIL: DRINKING FOUNTAIN & BOTTLE FILL

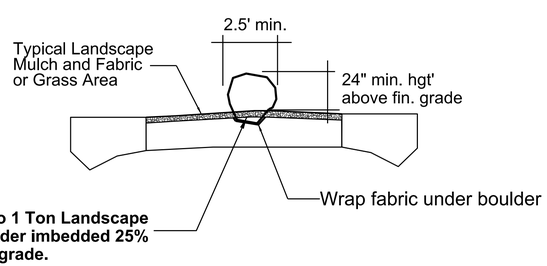

7/9 TYPICAL SECTION: LANDSCAPE BOULDER

Note: See Sheet 5 for boulder locations.

BIKE FIXATION
2647 37th AVE S, UNIT 1
MINNEAPOLIS, MN 55406
TOLL FREE: 1-800-783-7257

Material and Color (Bike Fix-it Station):
RED POWDER COATED STEEL

Material and Color (Air Pump and Gauge):
STAINLESS STEEL
OUTDOOR RATED
AIR PRESSURE GAUGE INCLUDED

NOTES:
1. INSTALLATION TO BE COMPLETED IN ACCORDANCE WITH MANUFACTURER SPECIFICATIONS.
2. INSTALL 36" x 36" x 4" CONCRETE SLAB ON 6" OF 3/4" MINUS BASE COURSE AND BOLT UNITS TO SLAB ACCORDING TO DIMENSIONS RECOMMENDED BY MANUFACTURER AND IN LOCATION SHOWN ON PLANS.
3. DO NOT SCALE DRAWING.
4. PROVIDE ITEM AS SHOWN OR APPROVED EQUAL.

8/9 TYPICAL DETAIL: BIKE FIX-IT STATION

NOTES:
1. MANUFACTURED BY DOG WASTE DEPOT OR EQUAL.
2. MATERIAL SHALL BE GREEN POWDER COATED ALUMINUM.
3. INCLUDES SIGN, POST, BAG DISPENSER, 400 ROLL BAGS, HARDWARE.
4. INSTALL IN THE LOCATION SHOWN ON THE PLANS IN ACCORDANCE WITH MANUFACTURER'S RECOMMENDATIONS.
5. PROVIDE DOG WASTE CAN WITH DOG WASTE STATION.

9/9 TYPICAL DETAIL: DOG WASTE STATION

WABASH VALLEY
505 EAST MAIN ST
SILVER LAKE, IN 46982
TOLL FREE: 1-800-253-8619
PHONE: (260) 352-2102

Material and Color:
SURFACE PATTERN: CROSS
PICNIC TABLE COLOR: HUNTER GREEN
RECEPTACLE MOUNTING: SURFACE

NOTES:
1. INSTALLATION TO BE COMPLETED IN ACCORDANCE WITH MANUFACTURER'S SPECIFICATIONS.
2. DO NOT SCALE DRAWING.
3. PROVIDE ITEM AS SHOWN OR APPROVED EQUAL.

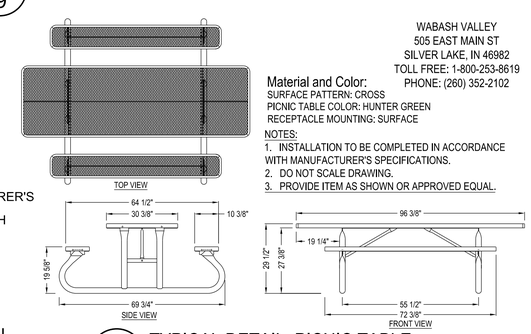

10/9 TYPICAL DETAIL: PICNIC TABLE

WABASH PLASTISOL COATED TABLE
SIGNATURE 6' ADA PICNIC TABLE - PORTABLE

WGM GROUP
WWW.WGMGROUP.COM

REGISTERED LANDSCAPE ARCHITECT
Bruce F. Luiz
Lic. No. 73
Signature
6-30-20
Exp. Date
State of Montana

LANDSCAPE DETAILS 2
AINSWORTH PARK MASTER PLAN
THOMPSON FALLS, MONTANA

REVISIONS:

NO.	DESCRIPTION	DATE

PROJECT: 17-07-25
LAYOUT: D SIZE
SURVEYED: KLM/RG
DESIGN: BFL
DRAFT: BFL
APPROVE: –
DATE:

SEPT 6, 2019

SHEET 9 OF 21

FILE: W:\Projects\170725\CAD Data\Survey\170725 BASE E.dwg

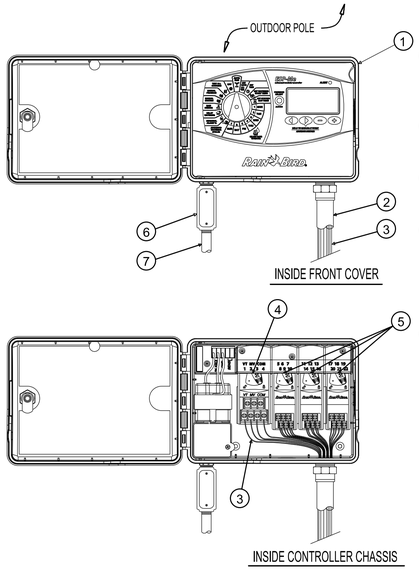

GENERAL NOTES:

1. MODULAR HYBRID CONTROLLER: RAIN BIRD ESP4ME OUTSIDE WALL MOUNT
2. 1-INCH PVC SCH 40 CONDUIT AND FITTINGS
3. WIRES TO REMOTE CONTROL VALVES
4. STANDARD MODULE FOR 4-STATION CONTROLLER
5. OPTIONAL MODULES FOR 22-STATION CONTROLLER
6. JUNCTION BOX
7. 1/2-INCH PVC SCH 40 CONDUIT TO POWER SUPPLY

1/10 Existing ESP-M Modular Hybrid Controller
OUTDOOR MODEL
No Scale

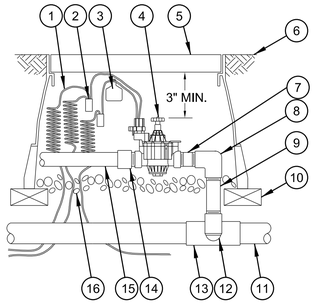

1. 30-INCH LINEAR LENGTH OF WIRE, COILED
2. WATERPROOF CONNECTION: RAIN BIRD SPLICE-1 (1 OF 2)
3. ID TAG: RAIN BIRD VID SERIES
4. REMOTE CONTROL VALVE: RAIN BIRD PGA
5. VALVE BOX WITH COVER: RAIN BIRD VB-STD
6. FINISH GRADE/TOP OF MULCH
7. PVC SCH 80 NIPPLE (CLOSE)
8. PVC SCH 40 ELL
9. PVC SCH 80 NIPPLE (LENGTH AS REQUIRED)
10. BRICK (1 OF 4)
11. PVC MAINLINE PIPE
12. SCH 80 NIPPLE (2-INCH LENGTH, HIDDEN) AND SCH 40 ELL
13. PVC SCH 40 TEE OR ELL
14. PVC SCH 40 MALE ADAPTER
15. PVC LATERAL PIPE
16. 3.0-INCH MINIMUM DEPTH OF 3/4-INCH WASHED GRAVEL

2/10 ELECTRIC REMOTE-CONTROL VALVE
PGA SERIES
No Scale

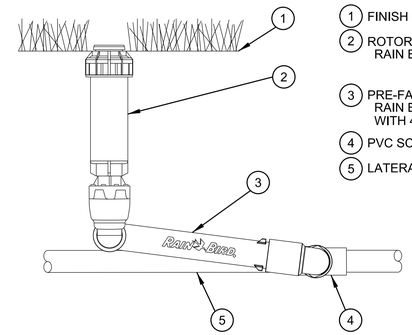

1. FINISH GRADE
2. ROTOR POP-UP SPRINKLER: RAIN BIRD 5004
3. PRE-FABRICATED SWING JOINT: RAIN BIRD TSJ-075-PRS WITH 45 PSI PRESSURE REGULATOR
4. PVC SCH 40 TEE OR ELL
5. LATERAL PIPE

5004
ROTOR POP-UP SPRINKLER

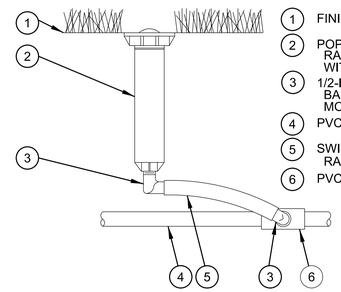

1. FINISH GRADE/TOP OF MULCH
2. POP-UP SPRAY SPRINKLER: RAIN BIRD 1804 WITH RAIN BIRD ROTARY NOZZLE
3. 1/2-INCH MALE NPT x .490 INCH BARB ELBOW: RAIN BIRD MODEL SBE-050
4. PVC LATERAL PIPE
5. SWING PIPE, 12-INCH LENGTH: RAIN BIRD MODEL SP-100
6. PVC SCH 40 TEE OR ELL

6/10 1804 POP-UP SPRAY SPRINKLER WITH ROTARY NOZZLE
No Scale

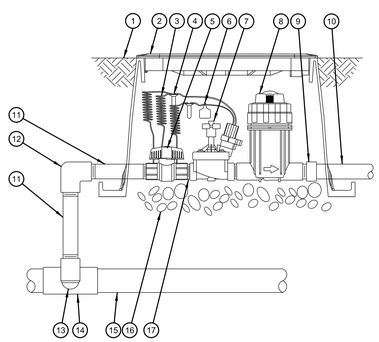

1. FINISH GRADE/TOP OF MULCH
2. VALVE BOX WITH COVER: RAIN BIRD VB-STD
3. 30-INCH LINEAR LENGTH OF WIRE, COILED
4. WATERPROOF CONNECTION: RAIN BIRD DB SERIES
5. 1-INCH BALL VALVE (INCLUDED IN XCZ-PRB-100-COM KIT)
6. ID TAG
7. REMOTE CONTROL VALVE: RAIN BIRD PESB (INCLUCED IN XCZ-PRB-100-COM KIT)
8. PRESSURE REGULATING QUICK CHECK BASKET FILTER: RAIN BIRD PRB-QKCHK-100 (INCLUDED IN XCZ-PRB-100-COM KIT)
9. PVC SCH 40 FEMALE ADAPTOR
10. LATERAL PIPE
11. PVC SCH 80 NIPPLE (LENGTH AS REQUIRED)
12. PVC SCH 40 ELL
13. PVC SCH 80 NIPPLE (2-INCH LENGTH, HIDDEN) AND PVC SCH 40 ELL
14. PVC SCH 40 TEE OR ELL
15. MAINLINE PIPE
16. 3-INCH MINIMUM DEPTH OF 3/4-INCH WASHED GRAVEL
17. PVC SCH 80 NIPPLE, CLOSE (INCLUDED IN XCZ-PRB-100-COM KIT)

4/10 Drip Zone
1" COMMERCIAL CONTROL ZONE KIT WITH BASKET FILTER
XCZ-100-PRB-COM

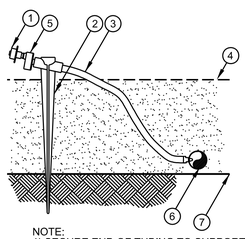

1. DIFFUSER BUG CAP & EMITTER
2. TUBING STAKE
3. 1/4" PE DRIP TUBING
4. TOP OF MULCH
5. SINGLE-OUTLET EMITTER
6. 1/2" PE PIPE DRIP TUBING TYPICAL
7. FINISH GRADE

NOTE:
1) SECURE END OF TUBING TO SUPPORT STAKE
2) USE HOLE PUNCH TO INSTALL EMITTER ON DRIP PE PIPE
3) PROVIDE 2-1 GPH FOR SHRUB, 1- 1 GPH FOR PEREN.,
2-2 GPH EMITTER FOR TREES.
4) PROVIDE HUNTER, AGRIFIM, RAINBIRD OR APPROVED EQUAL COMPONENTS.

5/10 Single Drip Emitter Detail
No Scale

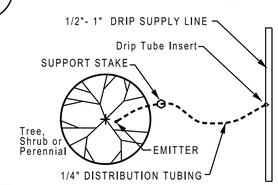

6/10 Typical Drip Emitter Plan
No Scale

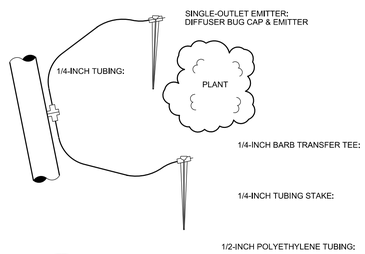

7/10 EMITTERS AROUND PLANT ON 1/4 INCH TUBING
SCALE: NOT TO SCALE

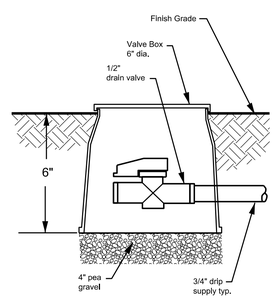

8/10 Drip Drain Valve Detail
No Scale

NOTE: PROVIDE DRAIN AT DEAD-END LOCATIONS ON ALL DRIP SUPPLY LINES. SEE PLANS

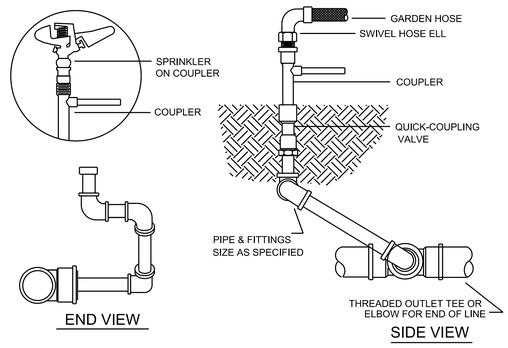

9/10 TYPICAL QUICK-COUPLING VALVE
No Scale

WGM GROUP
WWW.WGMGROUP.COM

REGISTERED LANDSCAPE ARCHITECT
Bruce F. Lutz
Lic. No. 73
Signature
6-30-20
Exp. Date
State of Montana

SITE CONSTRUCTION DETAILS 2
AINSWORTH PARK MASTER PLAN
THOMPSON FALLS, MONTANA

REVISIONS:

NO.	DESCRIPTION	DATE

PROJECT: 17-07-25
LAYOUT: D SIZE
SURVEYED: KLM/RG
DESIGN: BFL
DRAFT: BFL
APPROVE: –
DATE:
SEPT 3, 2019

SHEET 10 OF 21

FILE: W:\Projects\17072S\CAD Data\Survey\170725 BASE E.dwg

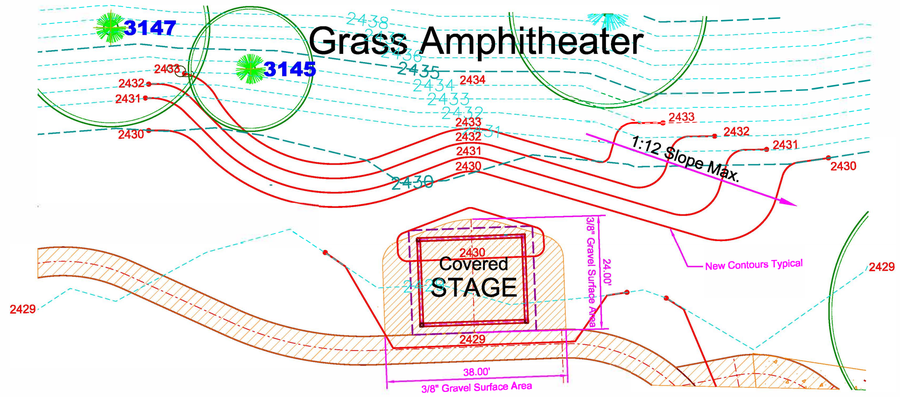

1/11 Typical Plan: Grassy Seating Slope

No Scale

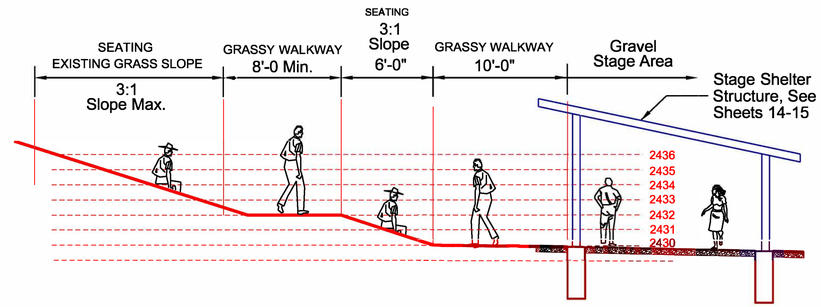

2/11 Typical Section: Grassy Seating Slope

No Scale

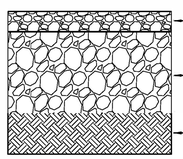

3" ¾"- MINUS GRAVEL SURFACING WITH PLASTICITY INDEX BETWEEN 4 & 12/ 95% COMPACTION PER ASTM D2041

6" of 1"- MINUS CRUSHED BASE / 95% COMPACTION PER AASHTO T-99

SCARIFY SUBGRADE TO A MINIMUM OF 6" DEPTH AND CURE WITH WATER TO BRING SUBGRADE'S MOSTURE CONTENT TO WITHIN 2% OF OPTIMUM. COMPACT TO A STANDARD RELATIVE COMPACTION OF AT LEAST 95% PER AASHTO T-99

SEE GEOTECHNICAL ENGINEERING REPORT FOR MATERIALS SPECIFICATIONS.

3/11 Typical Section: 3/4" Gravel Parking

No Scale

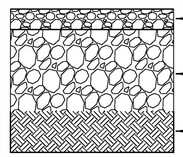

3" of 3/8"- MINUS GRAVEL SURFACING WITH PLASTICITY INDEX BETWEEN 4 & 12/ 95% COMPACTION PER ASTM D2041

6" of 1"- MINUS CRUSHED BASE / 95% COMPACTION PER AASHTO T-99

SCARIFY SUBGRADE TO A MINIMUM OF 6" DEPTH AND CURE WITH WATER TO BRING SUBGRADE'S MOSTURE CONTENT TO WITHIN 2% OF OPTIMUM. COMPACT TO A STANDARD RELATIVE COMPACTION OF AT LEAST 95% PER AASHTO T-99

SEE GEOTECHNICAL ENGINEERING REPORT FOR MATERIALS SPECIFICATIONS.

4/11 Typical Section: 3/8" Gravel Parking

No Scale

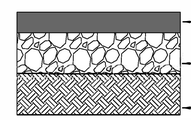

2.5" ASPHALT / PG 58-28 BINDER AND ¾" MINUS PLANT MIX MEETING MONTANA PUBLIC WORKS STANDARD SPECIFICATIONS. AVG. ASPHALT MAT DENSITY SHALL BE EQUAL TO OR GREATER THAN 93% OF MAXIMUM DENSITY AS DETERMINED BY ASTM D2041.

6" 1"-MINUS CRUSHED BASE / 95% COMPACTION PER AASHTO T-99

SCARIFY SUBGRADE TO A MINIMUM OF 6" DEPTH AND CURE WITH WATER TO BRING SUBGRADE'S MOSTURE CONTENT TO WITHIN 2% OF OPTIMUM. COMPACT TO A STANDARD RELATIVE COMPACTION OF AT LEAST 95% PER AASHTO T-99

SEE GEOTECHNICAL ENGINEERING REPORT FOR MATERIALS SPECIFICATIONS.

Add Alternate Section: Asphalt Parking

No Scale

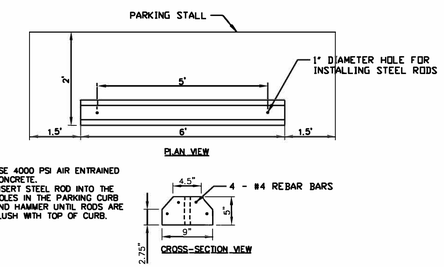

NOTE:
1. USE 4000 PSI AIR ENTRAINED CONCRETE.
2. INSERT STEEL ROD INTO THE HOLES IN THE PARKING CURB AND HAMMER UNTIL RODS ARE FLUSH WITH TOP OF CURB.

5/11 Typical Detail: Concrete Wheel Stop

No Scale

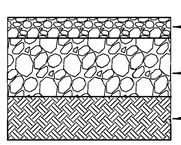

2" OF 3/8"- MINUS GRAVEL SURFACING 95% COMPACTION PER ASTM D2041

4" OF 3/4"- MINUS GRAVEL SURFACING WITH PLASTICITY INDEX BETWEEN 4 & 12/ 95% COMPACTION PER ASTM D2041

SCARIFY SUBGRADE TO A MINIMUM OF 6" DEPTH AND CURE WITH WATER TO BRING SUBGRADE'S MOSTURE CONTENT TO WITHIN 2% OF OPTIMUM. COMPACT TO A STANDARD RELATIVE COMPACTION OF AT LEAST 95% PER ASTM D2041

SEE GEOTECHNICAL ENGINEERING REPORT FOR MATERIALS SPECIFICATIONS.

6/11 Typical Section: 3/8" Gravel Path and Surfacing

No Scale

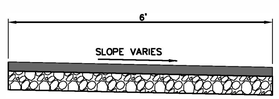

2.5" ASPHALT - PG 58-28 BINDER AND ¾" MINUS PLANT MIX MEETING MONTANA PUBLIC WORKS STANDARD SPECIFICATIONS. AVG. ASPHALT MAT DENSITY SHALL BE EQUAL TO OR GREATER THAN 93% OF MAXIMUM DENSITY AS DETERMINED BY ASTM D2041.

3" CRUSHED BASE COURSE - 1" MINUS, CRUSHED, 95% COMPACTION PER AASHTO T-99

6" SCARIFY SUBGRADE - CURE WITH WATER TO BRING SUBGRADE'S MOSTURE CONTENT TO WITHIN 2% OF OPTIMUM. COMPACT TO A STANDARD RELATIVE COMPACTION OF AT LEAST 95%

Add Alternate Section: Asphalt Path

No Scale

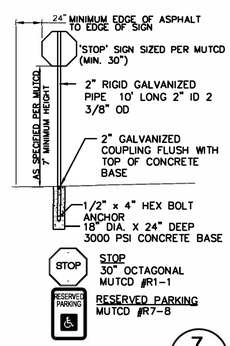

STOP
30" OCTAGONAL
MUTCD #R1-1

RESERVED PARKING
MUTCD #R7-8

ALL SIGN BLANKS SHALL BE 0.080 GAUGE FLAT ALUMINUM STOCK.

STREET NAME SIGN BLANKS SHALL BE 9" IN HEIGHT. LENGTH SHALL BE DETERMINED BY THE STREET NAME.

STOP SIGN FACES SHALL BE 3M HIGH INTENSITY GRADE REFLECTIVE SHEETING OR APPROVED EQUAL.

STREET SIGN SHALL BE WHITE ON GREEN PRISMATIC SHEETING, MINIMUM LEVEL IV, ACCORDING TO MUTCD. LETTERING SHALL BE 6" HIGH IN CAPITAL LETTERS, 4.5" LOWER CASE LETTERS, FOR >40 MPH.

STOP SIGNS SHALL BE ATTACHED TO THE SIGN POST WITH A U-BOLT STYLE SIGN MOUNTING CLAMP.

STREET NAME SIGNS SHALL BE ATTACHED TO THE TOP OF THE SIGN POST WITH A ROUND CAP SIGN HOLDER WITH A 12" LONG MOUNTING BRACKET. A 12" LONG 90° CROSSPIECE SHALL BE USED FOR DUAL SIGN APPLICATIONS.

7/11 Typical Detail: Street Signs

No Scale

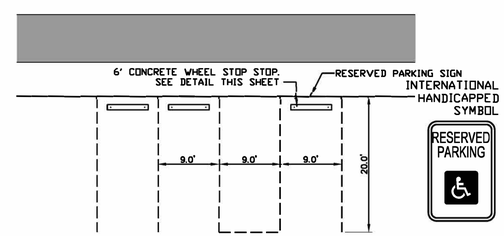

8/11 Typical Plan: Reserved Parking Stall

No Scale

IMPROVEMENTS SHALL BE CONSTRUCTED AND TESTED IN ACCORDANCE WITH THE LATEST EDITION OF STANDARDS FOR DESIGN AND CONSTRUCTION FOR THE CITY OF THOMPSON FALLS, MONTANA AND THE MONTANA PUBLIC WORKS STANDARD SPECIFICATIONS. THE CONSTRUCTION PLANS ARE INTENDED TO WORK IN CONJUNCTION WITH THE ABOVE STANDARDS.

WGM GROUP
WWW.WGMGROUP.COM

REGISTERED LANDSCAPE ARCHITECT
Bruce F. Lutz
Lic. No. 73
Signature
6-30-20
Exp. Date
State of Montana

SITE CONSTRUCTION DETAILS
AINSWORTH PARK MASTER PLAN
THOMPSON FALLS, MONTANA

REVISIONS:

NO.	DESCRIPTION	DATE

PROJECT: 17-07-25
LAYOUT: D SIZE
SURVEYED: KLM/RG
DESIGN: BFL
DRAFT: BFL
APPROVE: -
DATE:

SEPT 6, 2019

SHEET 11 OF 21

FILE: W:\Projects\170725\CAD Data\Survey\170725 BASE E.dwg

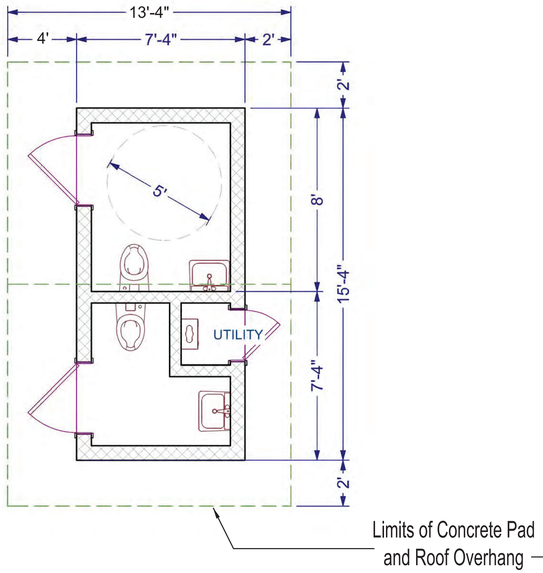

Typical Restroom Floor Plan

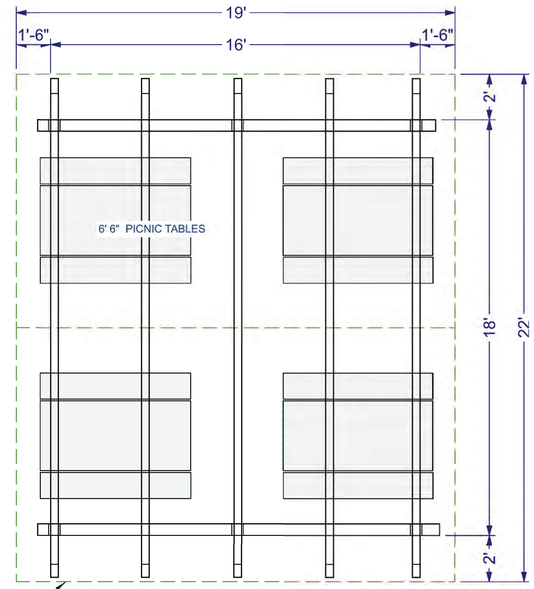

Typical Pavilion Floor Plan

Notes

BATHROOM:
Exterior walls to be decorative concrete block, coated inside and out with waterproof and scrubbable finish. Sinks and commodes to be commercial grade wall hung stainless units. Sinks to be Regency 17x15 or equivalent. Doors to be commercial grade insulated steel units with durable paint finish. Door hardware to be commercial grade Indicator Lever Lock 26D Satin Chrome C3FS or equivalent on the two bathroom doors. **A metal roof is required. City shall approve all colors. Concrete slab shall be standard gray color with broom finish (not stamped or colored).**

Floor to be poured concrete, including apron in front as shown. Utility room to contain water supply entry with shutoff valve. also electric demand type water heater Bosch Tronic 3000 T4 or equivalent. Includes stop and waste type underground water shutoff valve. Roof framing to be conventional wood trusses with applied plank truss on front gable as shown. This design would require draining water system for weather below about 25 degrees. **Refer to the electrical plans for additional requirements.**

PAVILION:
8X8 columns support 6x12 beams. All wood except roof boards to be rough sawn and stained, including roof trusses and curved braces as shown. Roof boards to be 2x8 pine T&G, unfinished. Slab floor is 4" concrete with 12" diameter x 36" deep sonotube bases at column locations. **A metal roof is required. The City shall approve all colors. Concrete slab shall be standard gray color with broom finish (not stamped or colored).**

GENERAL:
The drawings on this sheet were provided by Doug Ferrell of MOUNTAIN HOMES DESIGN BUILD (406-827-4341, ferrelldoug@gmail.com). The proposed restroom and pavilion shall be submitted as a supplier-designed package stamped by a registered MT sructural engineer prior to construction and to be reviewed and approved by the City of Thompson Falls. The structure shall be built in conformance with the latest addition of the Uniform Building Code. Refer to electrical sheets within this plan set for required electrical components.

Illustration: Restroom Perspective

Note: Picnic tables shown for illustrative purposes only.

Illustration: Pavilion Perspective

WGM GROUP
WWW.WGMGROUP.COM

RESTROOM AND PAVILION
AINSWORTH PARK MASTER PLAN
THOMPSON FALLS, MONTANA

REVISIONS:

NO.	DESCRIPTION	DATE

PROJECT: 17-07-25
LAYOUT: D SIZE
SURVEYED: KLM/RG
DESIGN: CXT-LB FOSTER
DRAFT: CXT-LB FOSTER
APPROVE: –
DATE:
SEPT 6, 2019

SHEET 12 OF 21

FILE: W:\Projects\170725\CAD Data\Survey\170725 BASE E.dwg

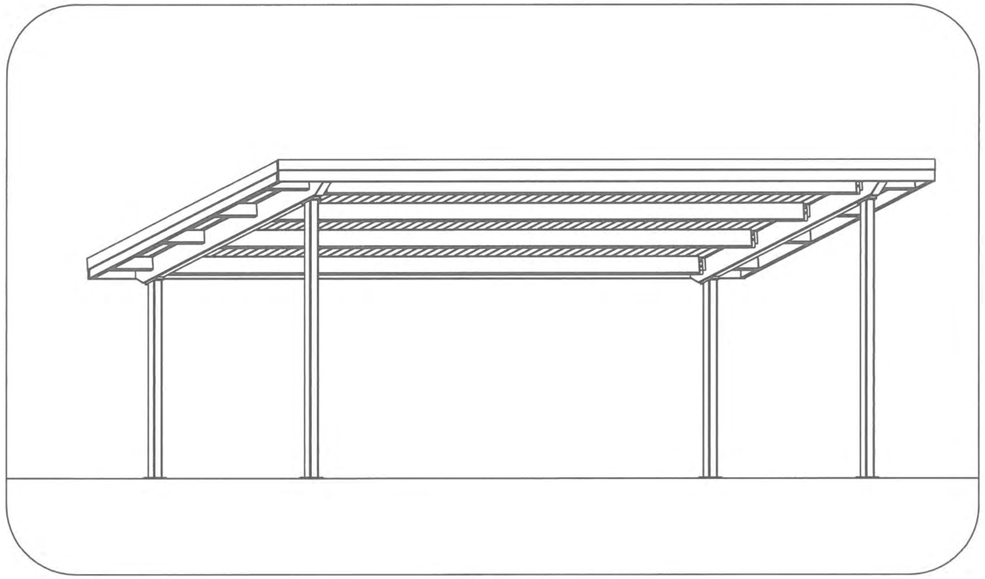

Note: Provide this product as shown or an approved equal

MODEL:	98-RM 22026 2T-SPSB ROCKY MOUNTAIN SERIES SHELTER
WIDTH OF SHELTER:	22'
LENGTH OF SHELTER:	26'
HEIGHT OF EAVE:	7' - 6"
OVERALL HEIGHT:	11' - 11-5/8"
ROOF TYPE	18" STANDING SEAM
ROOF DECK	2X6 NOM. FIR T&G
FASCIA	6 X 2 X .120 STEEL TUBE
ROOF PITCH	2/12

MINIMUM DESIGN CRITERIA:
- WIND LOAD 90 MPH
- SNOW LOAD 30 PSF
- BASIC SOIL BEARING 1500 PSF MIN.
- CONCRETE FOOTINGS: 2500 PSI MIN.

SHELTER SPECIFICATIONS:
- ROOF PITCH: 2/12
- ROOF STYLE: LEAN TO
- STEEL POSTS: 8 X 4 X 3/16 STEEL TUBE
- TRUSS BEAMS: 10 X 4 X 3/16 STEEL TUBE
- PURLINS: 8 X 4 X 3/16 STEEL TUBE
- FASCIA: 6 X 2 X .120 STEEL TUBE
- ROOF DECKING: 2 X 6 NOM. FIR T&G BOARD
- ROOFING: 24 GA 18" WIDE STANDING SEAM
- STEEL FINISH: POWDER COATED

POWDER COAT SPECIFICATIONS STANDARDS:
- FLEXIBILITY (ASTM D-1735)
- IMPACT (ASTM D-3359)
- ADHESION (ASTM D-3359)
- HARDNESS (ASTM D-3363)
- OVERBAKE RESISTANCE (ASTM D-2454)
- WEATHERABILITY (ASTM D-822)

SHELTER COLOR SELECTION:
- POWER COAT: LAZER COPPER
- ROOFING: FOREST GREEN
- ROOF TRIM: FOREST GREEN

MANUFACTURING SPECIFICATIONS STANDARDS:
- ALL WELDING IS DONE USING ELECTRIC ARC METHOD BY CERTIFIED WELDERS.
- ALL OF THE WELDING CONFORMS TO AWS-D1.1 & D1.2 CODE.

MATERIAL SPECIFICATIONS:
- POSTS CONFORM TO (A 500 GRADE B) STRUCTURAL TUBING.
- TOP PLATES, BASE PLATES, AND WING PLATES ALL CONFORM TO ASTM A36 STEEL PLATE.
- ANCHORS ARE 1"-UNC ZINC COATED ALL-THREAD TO PROVIDE DRILLING AND EPOXY PER FTG LAYOUT.

HARDWARE SPECIFICATIONS:
- HARDWARE IS ZINC COATED
- ALL BOLTS TO BE GRADE 2 OR BETTER.

FINISH SPECIFICATIONS:
- STEEL FRAMING IS WHEELABRATED TO SP 10 NEAR WHITE AND ELECTROSTATICALLY COATED WITH A POLYESTER POWDER COAT TO 6-8 MILS.
- ANY SCRATCHES OR DAMAGED PAINT TO BE TOUCHED UP AFTER FINAL ASSEMBLY.

ENGINEERING SPECIFICATIONS STANDARDS:
STRUCTURAL DESIGN CONFORMS TO:
- STRUCTURAL STEEL AISC SPECIFICATIONS.
- CONSTRUCTION SPECIFICATION CODES AND CONNECTIONS IN THE STEEL CONSTRUCTION MANUAL INCLUDING ASTM CODES.
- 2012 INTERNATIONAL BUILDING CODE AND LOCAL BUILDING CODE
- METAL BUILDING MANUFACTURERS ASSOC.

SPECIFICATIONS | 1

NOTE:
STRUCTURAL SHOP DRAWINGS SHALL BE PROVIDED BY THE CONTRACTOR AND STAMPED BY A PROFESSIONAL ENGINEER LICENSED IN THE STATE OF MONTANA.

Pre-approved equals can be provided by Romtec and Polygon

Natural Structures
PO Box 270
Baker City, OR 97814
Phone: (541) 523-0224
Fax (541) 523-0231

ROCKY MOUNTAIN SERIES SHELTER

DRAWN BY: TB
REVIEWED BY:
DATE: 03/17/2017
ANSI SHEET SIZE: B

REVISION / DATE

PAGE SCALE: NTS

PAGE: 1

WGM GROUP
WWW.WGMGROUP.COM

STAGE SHELTER DETAILS 1
AINSWORTH PARK MASTER PLAN
THOMPSON FALLS, MONTANA

REVISIONS:

NO.	DESCRIPTION	DATE

PROJECT: 17-07-25
LAYOUT: D SIZE
SURVEYED: KLM/RG
DESIGN: NATURAL STRUCTURES
DRAFT: NATURAL STRUCTURES
APPROVE: –
DATE:

SEPT 6, 2019

SHEET 13 OF 21

FILE: W:\Projects\170725\CAD Data\Survey\170725 BASE E.dwg

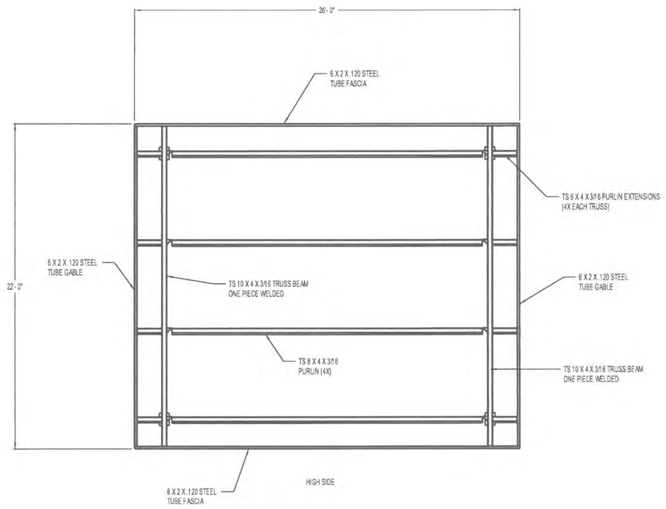

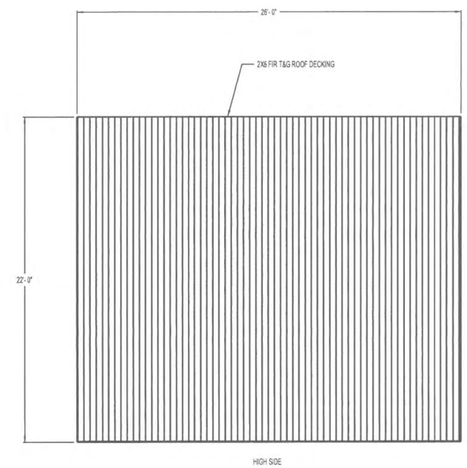

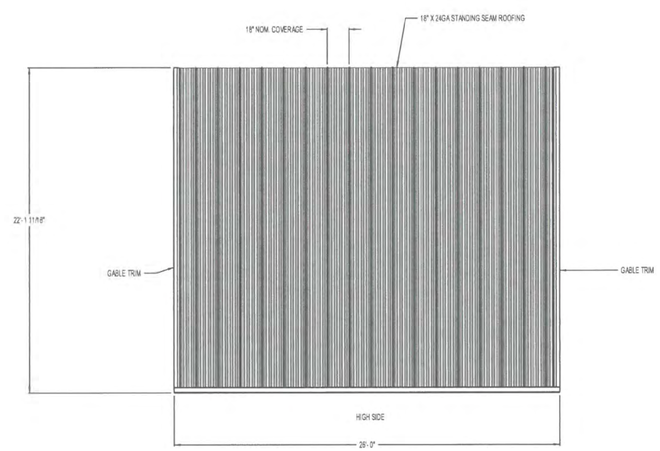

NOTE:
STRUCTURAL SHOP DRAWINGS SHALL BE PROVIDED BY THE CONTRACTOR AND STAMPED BY A PROFESSIONAL ENGINEER LICENSED IN THE STATE OF MONTANA.

Pre-approved equals can be provided by Romtec and Polygon

Natural Structures
PO Box 270
Baker City, OR 97814
Phone: (541) 523-0224
Fax (541) 523-0231

MODIFIED ROCKY MOUNTAIN SERIES
PLAN VIEW
22' X 26' 2/12 PITCH

DRAWN BY: TB
REVIEWED BY:
DATE: 03/17/2017
ANSI SHEET SIZE: B

REVISION / DATE

PAGE SCALE: 1/8" = 1'

PAGE: 2

WGM GROUP
WWW.WGMGROUP.COM

STAGE SHELTER DETAILS 2
AINSWORTH PARK MASTER PLAN
THOMPSON FALLS, MONTANA

REVISIONS:

NO.	DESCRIPTION	DATE

PROJECT: 17-07-25
LAYOUT: D SIZE
SURVEYED: KLM/RG
DESIGN: NATURAL STRUCTURES
DRAFT: NATURAL STRUCTURES
APPROVE: –
DATE:
SEPT 6, 2019

SHEET 14 OF 21

FILE: W:\Projects\170725\CAD Data\Survey\170725 BASE E.dwg

FRAMING VIEWS

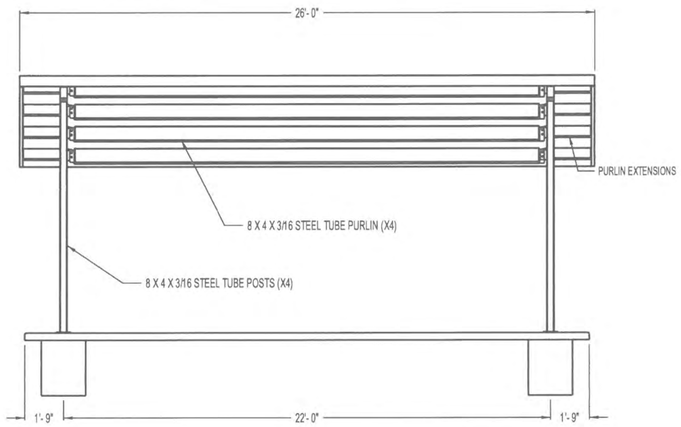

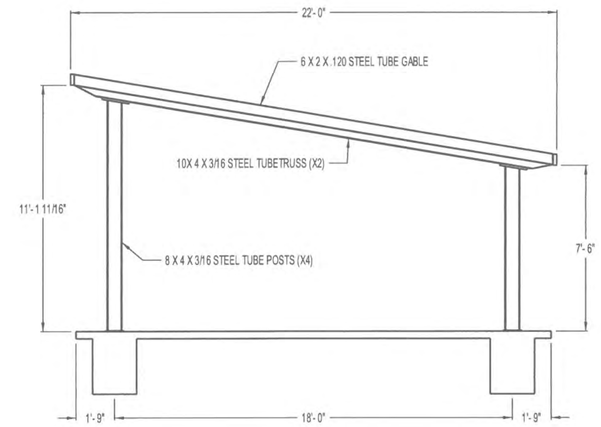

ROOF DECKING VIEWS

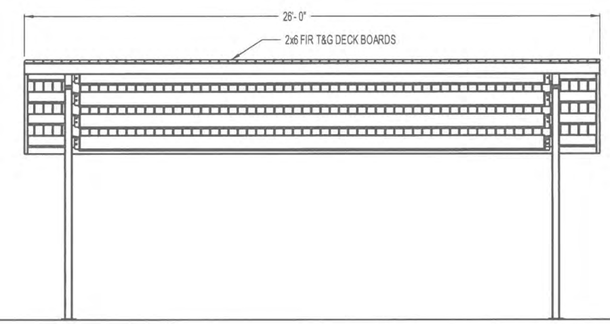

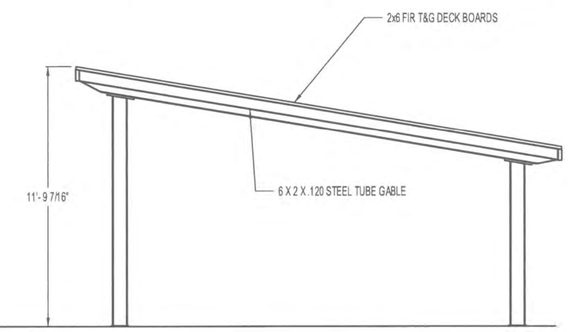

METAL ROOFING VIEWS

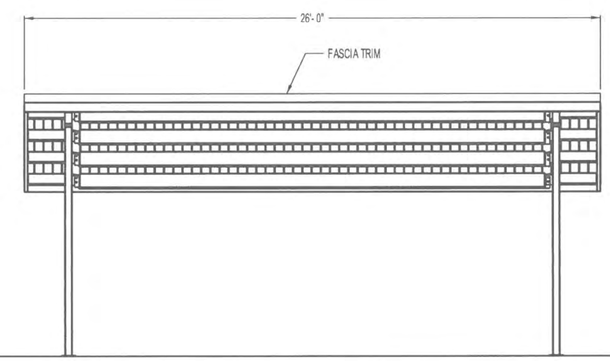

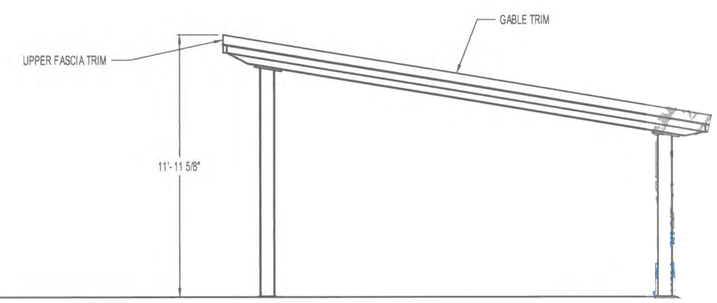

ELEVATION VIEWS

1

SCALE 4:1

Natural Structures
PO Box 270
Baker City, OR 97814
Phone: (541) 523-0224
Fax (541) 523-0231

ROCKY MOUNTAIN SERIES ELEVATION VIEWS
16' X 20' 4/12 PITCH

DRAWN BY: TB
REVIEWED BY:
DATE: 07/20/2016
ANSI SHEET SIZE: B

REVISION / DATE

PAGE SCALE: 3/16" = 1'

PAGE:

3

NOTE:
STRUCTURAL SHOP DRAWINGS SHALL BE PROVIDED BY THE CONTRACTOR AND STAMPED BY A PROFESSIONAL ENGINEER LICENSED IN THE STATE OF MONTANA.

Pre-approved equals can be provided by Romtec and Polygon

WGM GROUP
WWW.WGMGROUP.COM

STAGE SHELTER DETAILS 3
AINSWORTH PARK MASTER PLAN
THOMPSON FALLS, MONTANA

REVISIONS:

NO.	DESCRIPTION	DATE

PROJECT: 17-07-25
LAYOUT: D SIZE
SURVEYED: KLM/RG
DESIGN: NATURAL STRUCTURES
DRAFT: NATURAL STRUCTURES
APPROVE: –
DATE:

SEPT 6, 2019

SHEET 15 OF 21

FILE: W:\Projects\170725\CAD Data\Survey\170725 BASE E.dwg

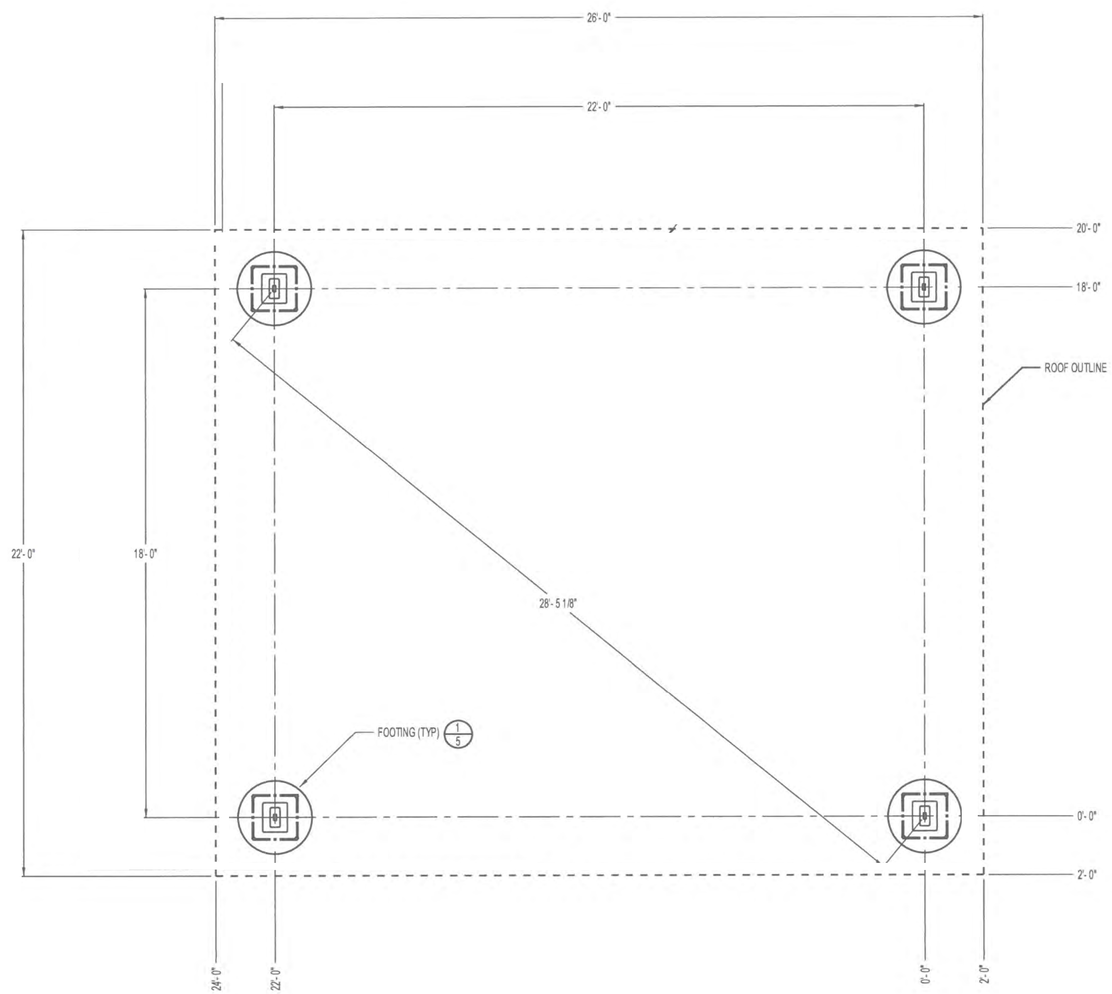

NOTE:
STRUCTURAL SHOP DRAWINGS SHALL BE PROVIDED BY THE CONTRACTOR AND STAMPED BY A PROFESSIONAL ENGINEER LICENSED IN THE STATE OF MONTANA.

Pre-approved equals can be provided by Romtec and Polygon

Natural Structures
PO Box 270
Baker City, OR 97814
Phone: (541) 523-0224
Fax (541) 523-0231

SINGLE SIDED ROCKY MOUNTAIN SERIES
FOOTING LAYOUT
22' X 26' 2/12 PITCH

DRAWN BY: TB
REVIEWED BY:
DATE: 03/17/2017
ANSI SHEET SIZE B

REVISION / DATE

PAGE SCALE: 1/4" = 1'

PAGE 4

WGM GROUP
WWW.WGMGROUP.COM

STAGE SHELTER DETAILS 4
AINSWORTH PARK MASTER PLAN
THOMPSON FALLS, MONTANA

REVISIONS:

NO.	DESCRIPTION	DATE

PROJECT: 17-07-25
LAYOUT: D SIZE
SURVEYED: KLM/RG
DESIGN: NATURAL STRUCTURES
DRAFT: NATURAL STRUCTURES
APPROVE: –
DATE:
SEPT 6, 2019

FILE: W:\Projects\170725\CAD Data\Survey\170725 BASE E.dwg

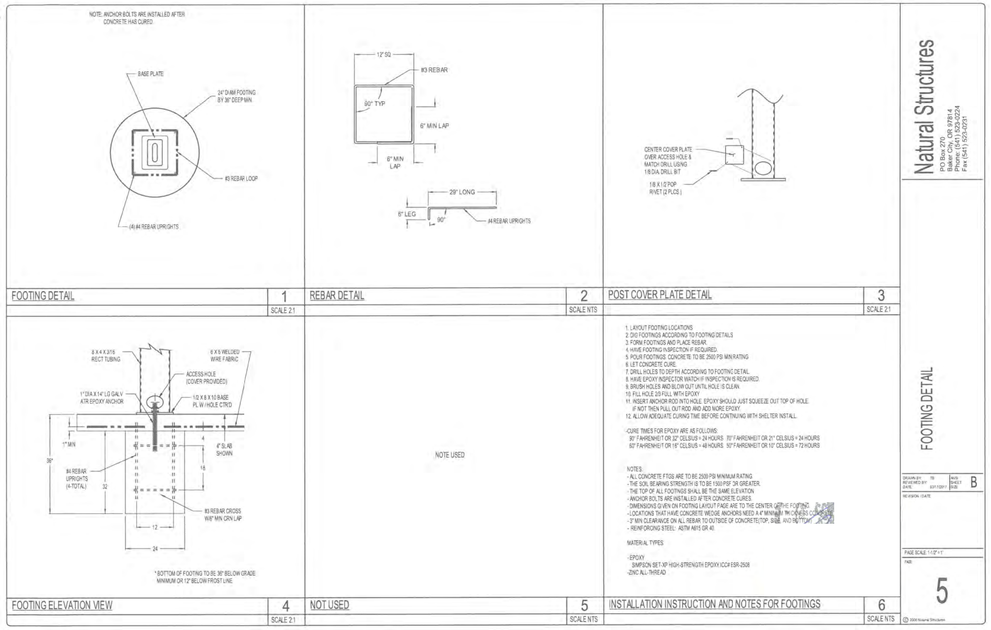

Note: Provide this product as shown or an approved equal

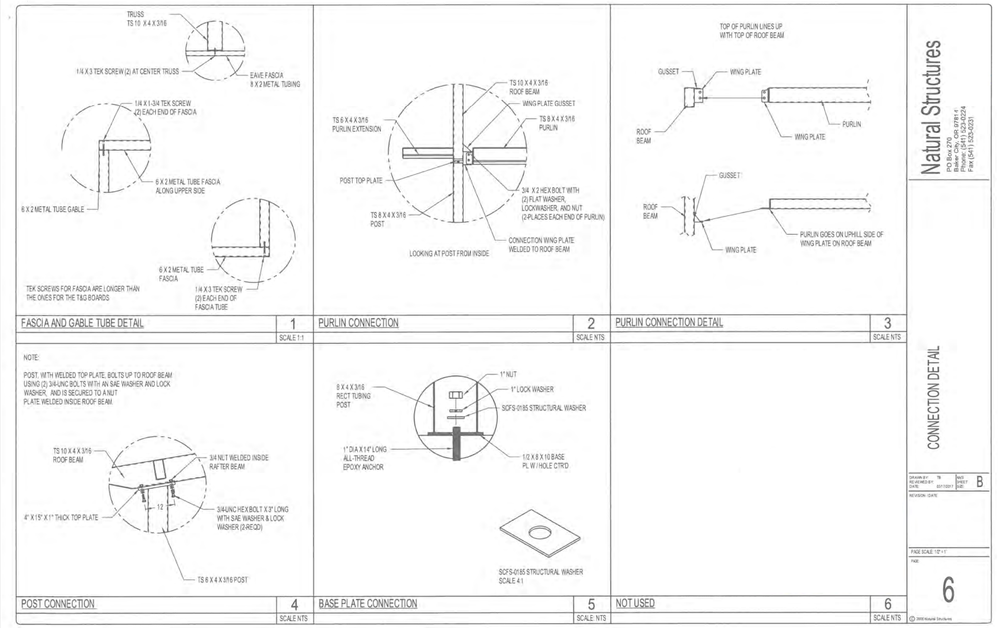

Note: Provide this product as shown or an approved equal

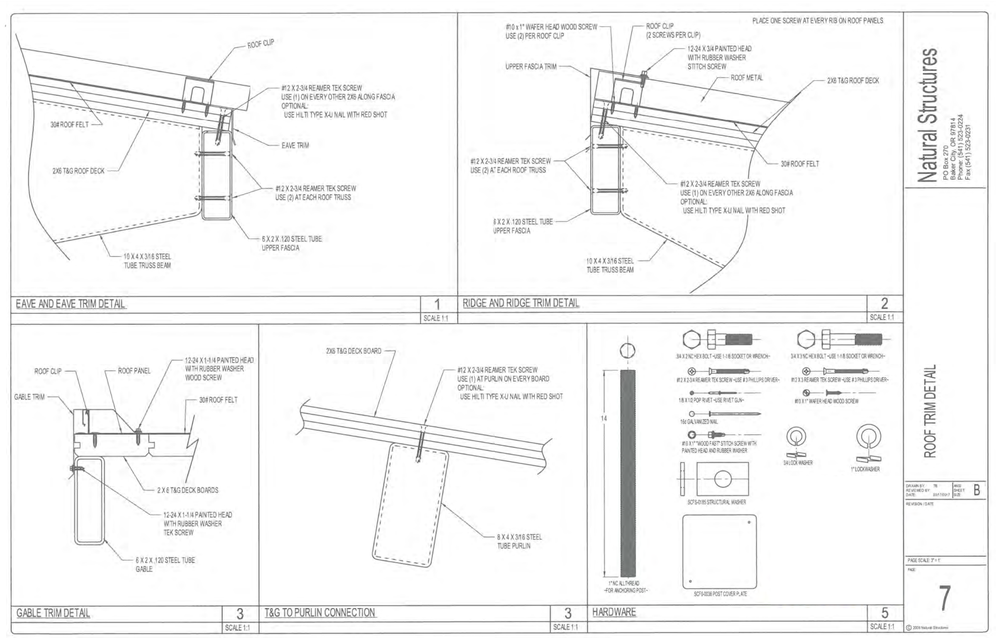

Note: Provide this product as shown or an approved equal

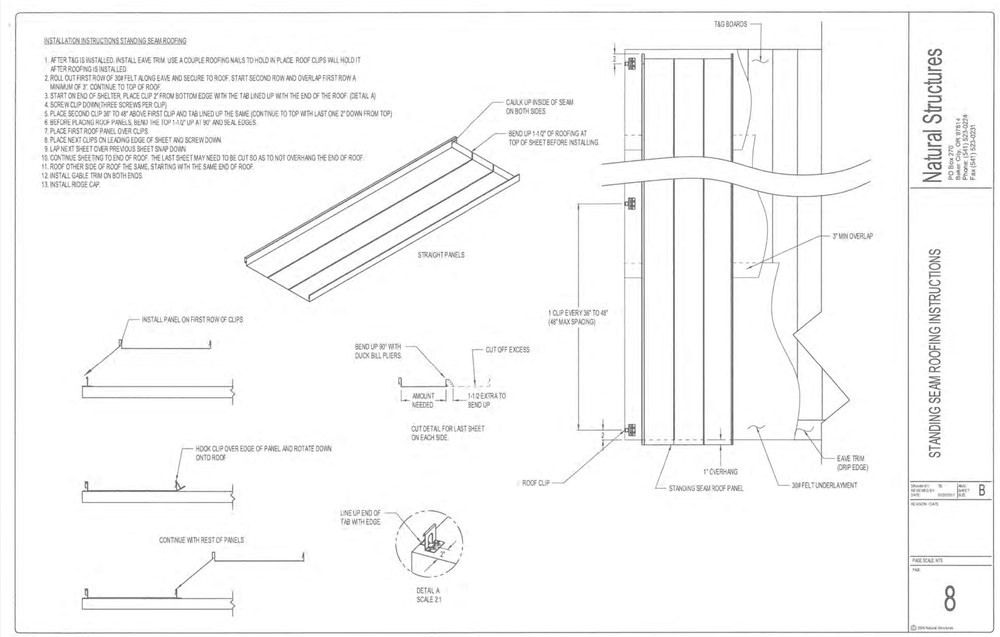

Pre-approved equals can be provided by Romtec and Polygon

WGM GROUP
WWW.WGMGROUP.COM

STAGE SHELTER DETAILS - 5-8
AINSWORTH PARK MASTER PLAN
THOMPSON FALLS, MONTANA

REVISIONS:

NO.	DESCRIPTION	DATE

PROJECT: 17-07-25
LAYOUT: D SIZE
SURVEYED: KLM/RG
DESIGN: NATURAL STRUCTURES
DRAFT: NATURAL STRUCTURES
APPROVE: –
DATE: SEPT 6, 2019

SHEET 17 OF 21

FILE: W:\Projects\170725\CAD Data\Survey\170725 BASE E.dwg

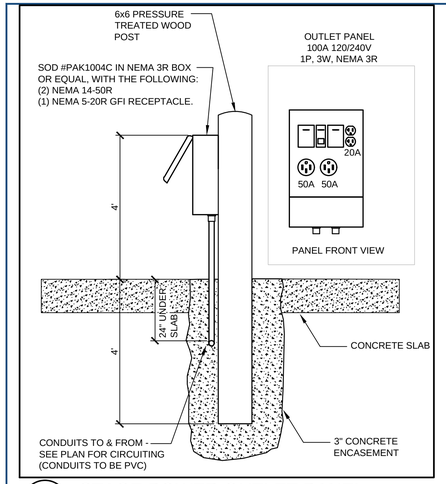

1 / E1 STAGE POWER OUTLET PANEL

NTS

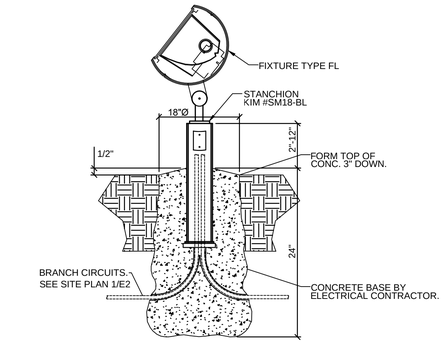

5 / E1 FLOOD LIGHT BASE DETAIL

NTS

ABBREVIATIONS AND MISCELLANEOUS

SYMBOL	DESCRIPTION
AC	ABOVE COUNTER, 4" BACK SPLASH
AFG	ABOVE FINISHED GRADE
AFF	ABOVE FINISHED FLOOR
C	CONDUIT
CU	COPPER
(E)	EXISTING
EC	ELECTRICAL CONTRACTOR
EF	EXHAUST FAN
GC	GENERAL CONTRACTOR
GND	GROUND
QTY	QUANTITY

SYMBOL	DESCRIPTION
TYP	TYPICAL
UG	UNDERGROUND
UON	UNLESS OTHERWISE NOTED
W/	WITH
WP	WEATHER PROOF
BN1L-2,4,6	CIRCUIT DESIGNATION, PANEL BN1L, CIRCUITS 2,4,6
1/E501	INDICATES DETAIL 1 ON SHEET E501
1	SHEET WORK NOTE
	HOME RUN TO PANEL
	CONDUIT CONCEALED IN CEILING OR WALL
	CONDUIT CONCEALED UNDER FLOOR
///	CIRCUIT, NUMBER OF HASH MARKS INDICATES NUMBER OF CONDUCTORS IN CABLE/RACEWAY. GROUND WIRE IS NOT SHOWN BUT SHALL BE INCLUDED. NO HASH MARKS INDICATES 2 CONDUCTORS PLUS GROUND.

LEGEND

LIGHTING

SYMBOL	DESCRIPTION
	WALL MOUNTED FIXTURE, SIZE ON PLANS
	PENDANT OR SURFACE MOUNTED FIXTURE, SIZE ON PLANS
	SURFACE MOUNTED FIXTURE
	WALL MOUNTED FIXTURE
	SQUARE POLE MOUNTED FIXTURE, EXTERIOR
	BOLLARD FIXTURE, EXTERIOR
	DIRECTIONAL INGROUND FIXTURE, EXTERIOR

DEVICES AND POWER

SYMBOL	DESCRIPTION
$	SWITCH - SPST
WP	WEATHERPROOF
OS	OCCUPANCY SENSOR (CEILING) - SUBSCRIPT IS TYPE
PC	PHOTOCELL
	RECEPTACLE - DUPLEX
	GFI RECEPTACLE - DUPLEX (GROUND FAULT INTERRUPT)
WP	WEATHERPROOF COVER & WEATHER RESISTANT RECEPTACLE
	SPECIAL PURPOSE CONNECTION - BOX INDICATES FLOOR MOUNTING - WORK AS NOTED
	PANELBOARD, SURFACE MOUNTED
	ELECTRIC METER

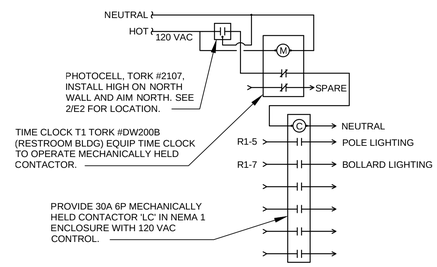

6 / E1 SITE LIGHTING CONTROL DETAIL

NTS

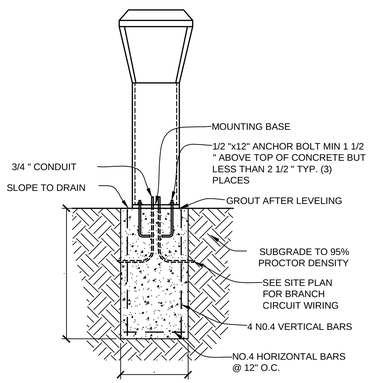

7 / E1 BOLLARD LIGHT BASE DETAIL

NTS

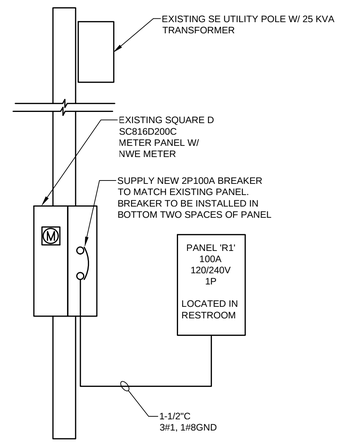

3 / E1 ONE-LINE DIAGRAM SE UTILITY LOCATION

NTS

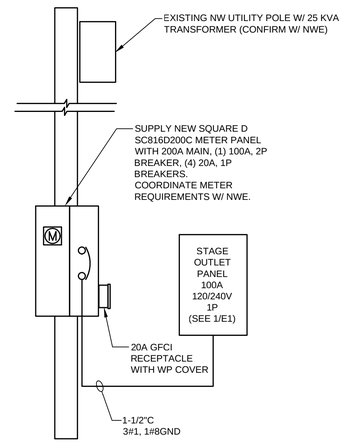

4 / E1 ONE-LINE DIAGRAM NW UTILITY LOCATION

NTS

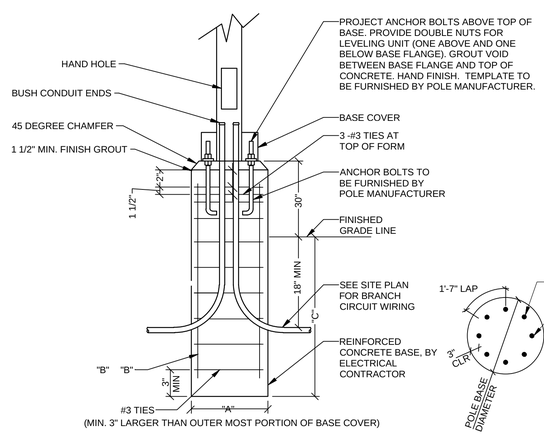

NOTE: PROVIDE 8' OF #6 AWG BARE COPPER WIRE WITHIN POLE BASE AND TIE TO VERTICAL/HORIZONTAL BARS AND BOND TO POLE AS REQUIRED.

POLE HEIGHT	POLE BASE DIAMETER	VERTICAL BARS	DEPTH BELOW GRADE RESTRAINED	DEPTH BELOW GRADE UNRESTRAINED
	"A"	"B"	"C"	"C1"
20' OR LESS	"20"	5-#5	4'-6"	6'-0"

2 / E1 SITE POLE BASE DETAIL

NTS

PANEL SCHEDULE — CTA ENGINEERS

LOCATION: SOURCE: AIC RATING: 10,000 AMPS, RMS, SYM. MOUNTING: SURFACE PANEL NAME: R1

REV. NO.	CKT NO.	DESCRIPTION	BREAKER AMP	BREAKER POLE	REF. NOTE	LTG.	REC'S	MOTOR	EQUIP.	HEATING	COOLING	VA	AMPS
	1	HAND DRYER	20	1					1,150			1,150	9.6
	3	HAND DRYER	20	1					1,150			1,150	9.6
	5	POLE LIGHTING	20	1		610						610	5.1
	7	BOLLARD LIGHTING	20	1		170						170	1.4
	9	SPARE	20	1								0	0.0
	11	SPARE	20	1								0	0.0
	13	SPACE										0	0.0
	15	SPACE										0	0.0
	17	SPACE										0	0.0
	2	RESTROOM LIGHTING	20	1		150						150	1.3
	4	RESTROOM RECEPTACLE	20	1			180					180	1.5
	6	PAVILION LIGHTING / POWER	20	1		84	180					264	2.2
	8	SPARE	20	1								0	0.0
	10	SPARE	20	1								0	0.0
	12	SPACE										0	0.0
	14	SPACE										0	0.0
	16	SPACE										0	0.0
	18	SPACE										0	0.0

REFERENCE NOTES:
1
2
3
4

PANEL DATA

AMPERAGE:	100
VOLTAGE:	120/240
PHASE:	1
WIRE:	3
MAINS	REF. NOTE
CKT. BKR.	100 AMP
LUGS ONLY	NO
GROUND BUSS	
EQUIPMENT:	YES
ISOLATED:	-
NEUTRAL BUSSING	
100%	YES
200%	-
BUSSING	
COPPER:	YES
ALUMINUM:	-
TOP FEED:	-
BOTTOM FEED:	-
FEED THRU LUGS:	-
SUB FEED LUGS:	-

CONNECTED TOTALS (INCLUDES FEED-THRU CONTRIBUTION)

LOAD	KVA	AMPS
LIGHTING:	1.0	2.4
RECEPTACLES:	0.4	0.9
MOTOR:	0.0	0.0
EQUIPMENT:	2.3	5.5
HEATING:	0.0	0.0
COOLING:	0.0	0.0
TOTALS	3.7	8.8

PHASE	KVA	AMPS
A:	1.5	12.3
B:	1.3	11.1
C:	0.9	7.3
TOTAL	3.7	

FEEDER DEMAND TOTALS

LOAD	KVA	AMPS
LIGHTING:	1.3	3.0
RECEPTACLES:	0.4	0.9
MOTOR:	0.0	0.0
EQUIPMENT:	2.3	5.5
HEAT/COOL:	0.0	0.0
LARGEST MOTOR:	0.2	0.5
TOTAL	4.1	9.9

DATE: 09/10/19

LIGHT FIXTURE AND CONTROL SCHEDULE

SYMBOL	TAG	DESCRIPTION	MODEL	LAMPS	INPUT WATTS
	P1	TYPE 3 POLE LIGHT	LEOTEK AR13-10M2-MV-WW3-BK-700-RPA	LED	80
	P2	TYPE 5 POLE LIGHT	LEOTEK EC3-12M2-120/277-WW-5-BK-700-RPB	LED	107
	P3	TYPE 3 POLE LIGHT	LEOTEK EC3-12M2-120/277-WW-3-BK-700-RPB	LED	83
	B1	BOLLARD	GARDCO PBL-36-14L-350-WY-G2-3-120-BK	LED	17
	FL	IN GROUND FLOOD LIGHT	GARDCO DFL7-ST-RM-16L-700-WW-G2-UNV-BK-BD	LED	38
	W1	LED WALL PACK (FIXTURE TO HAVE INTEGRAL PHOTO CELL)	CLW-304WP-10CLED-30-MV-BK-PC-DL	LED	12
	C1	CEILING VANDAL RESISTANT	LUMINAIRE ARV17-40W-3000K-CC-OP-BLK	LED	43
	POLE	POLE TYPE FOR P1, P2, P3	KW - RSP20-4.0-11-BLK-DM10-DC	-	-

WGM GROUP
WWW.WGMGROUP.COM
CTA
www.ctagroup.com
800.757.9522

MONTANA CARL J. MAEHL 10488 PE LICENSED PROFESSIONAL ENGINEER

ELECTRICAL LEGENDS AND SCHEDULES
AINSWORTH PARK MASTER PLAN
THOMPSON FALLS, MONTANA

REVISIONS:

NO.	DESCRIPTION	DATE

PROJECT: 17-07-25
LAYOUT: D SIZE
SURVEYED:
DESIGN: DL
DRAFT: MK
APPROVE: CM
DATE:
SEPTEMBER 6, 2019

FILE: W:\Projects\170725\CAD Data\Survey\170725 BASE E.dwg

SHEET 18 OF 21

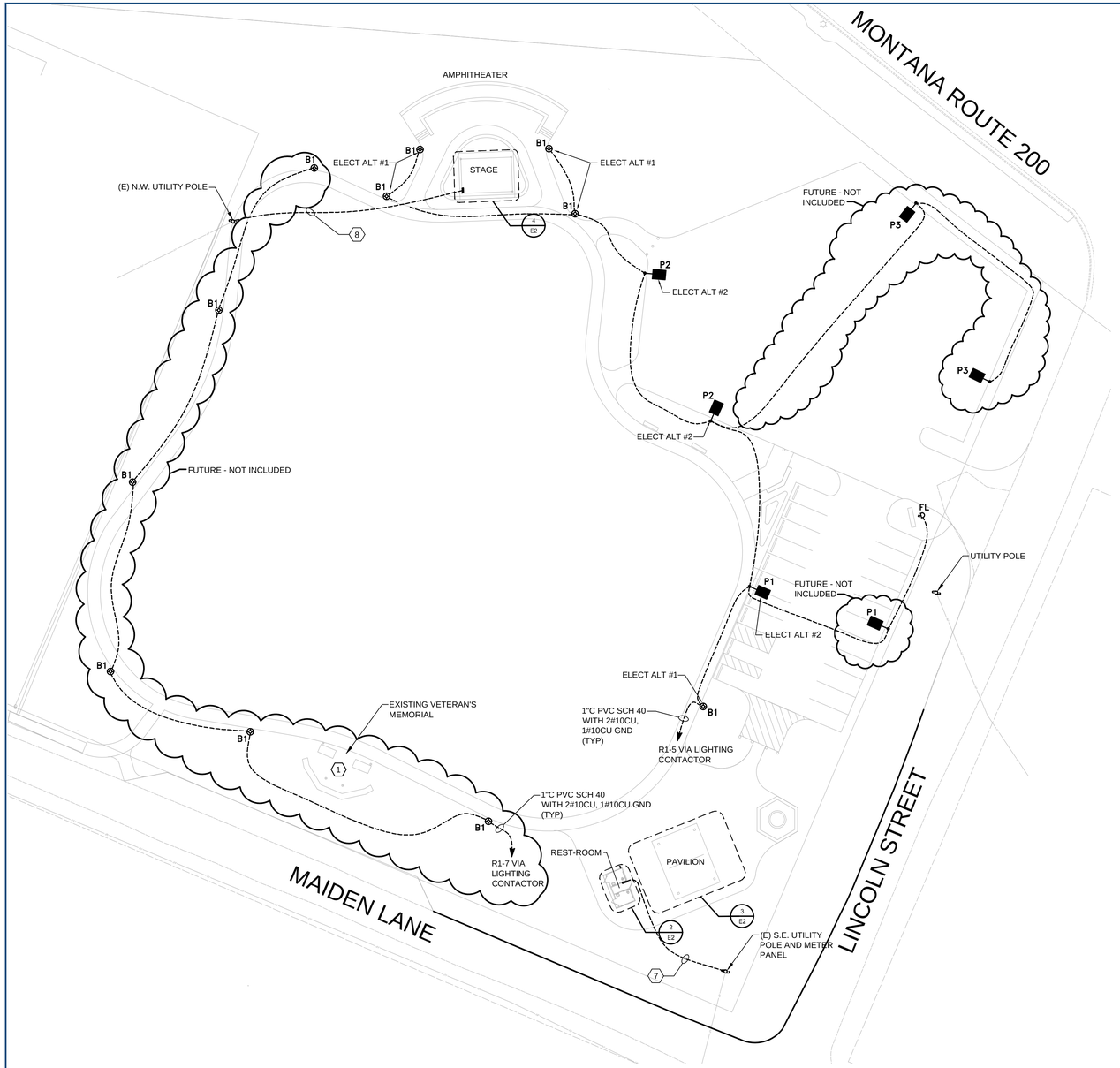

1 E2 ELECTRICAL SITE PLAN

1"=30'-0"

ALT NOTES:

SEE PROJECT SPECIFICATIONS FOR DESCRIPTION OF ELECTRICAL ALTERNATE REQUIREMENTS.

SHEET WORK NOTES

1. MAINTAIN EXISTING BOLLARD AND FLAG LIGHTING AT VETERAN'S MEMORIAL.
2. RESTROOM IS A DESIGN-BUILD PRODUCT. CONTRACTOR TO COORDINATE BLOCK OUT REQUIREMENTS FOR FEEDS TO AND FROM PANEL R1 WITH BUILDING ENGINEER PRIOR TO RELEASE OF RESTROOM.
3. SUPPLY LIGHT SWITCH IN LOCKABLE WEATHER PROOF COVER.
4. SANIFLOW 120V/9.58A HAND DRYER SUPPLIED AND INSTALLED BY ELECTRICAL CONTRACTOR.
5. BROAN 508 EXHAUST FAN SUPPLIED AND INSTALLED BY ELECTRICAL CONTRACTOR. EXHAUST FAN TO BE CONTROLLED BY OCCUPANCY SENSOR.
6. SUPPLY WATTSTOPPER #UT-355 (OR EQUAL) 120V ULTRASONIC CEILING SENSOR FOR CONTROL OF LIGHTING AND EXHAUST FAN. SET TO AUTO ON/ AUTO OFF WITH TIME DELAY OF 20 MINUTES. SET SENSITIVITY TO MAX.
7. SEE ONE-LINE DIAGRAM 3/E1 FOR FEEDER AND EQUIPMENT REQUIREMENTS.
8. SEE ONE-LINE DIAGRAM 4/E1 FOR FEEDER AND EQUIPMENT REQUIREMENTS.

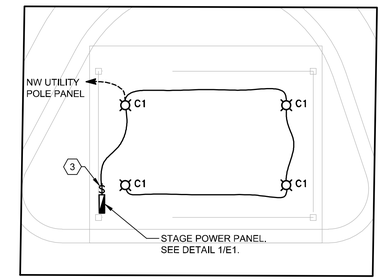

4 E2 ENLARGED STAGE ELECTRICAL PLAN

1/8"=1'-0"

TRUE NORTH

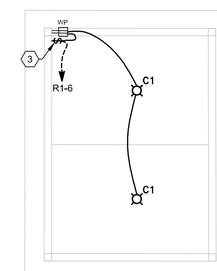

3 E2 ENLARGED PAVILION ELECTRICAL PLAN

NTS

TRUE NORTH

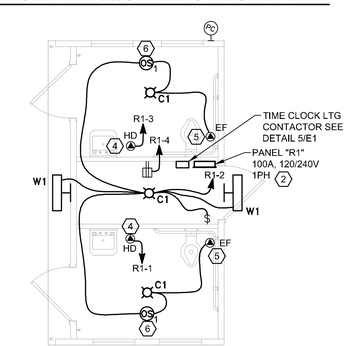

2 E2 ENLARGED RESTROOM ELECTRICAL PLAN

NTS

TRUE NORTH

WGM GROUP

WWW.WGMGROUP.COM

CTA

www.ctagroup.com
800.757.9522

MONTANA
CARL J. MAEHL
10488 PE
LICENSED PROFESSIONAL ENGINEER

SITE POWER AND LIGHTING PLAN
AINSWORTH PARK MASTER PLAN
THOMPSON FALLS, MONTANA

REVISIONS:

NO.	DESCRIPTION	DATE

PROJECT: 17-07-25
LAYOUT: D SIZE
SURVEYED:
DESIGN: DL
DRAFT: MK
APPROVE: CM
DATE:
SEPTEMBER 6, 2019

SHEET 19 OF 21

FILE: W:\Projects\170725\CAD Data\Survey\170725 BASE E.dwg

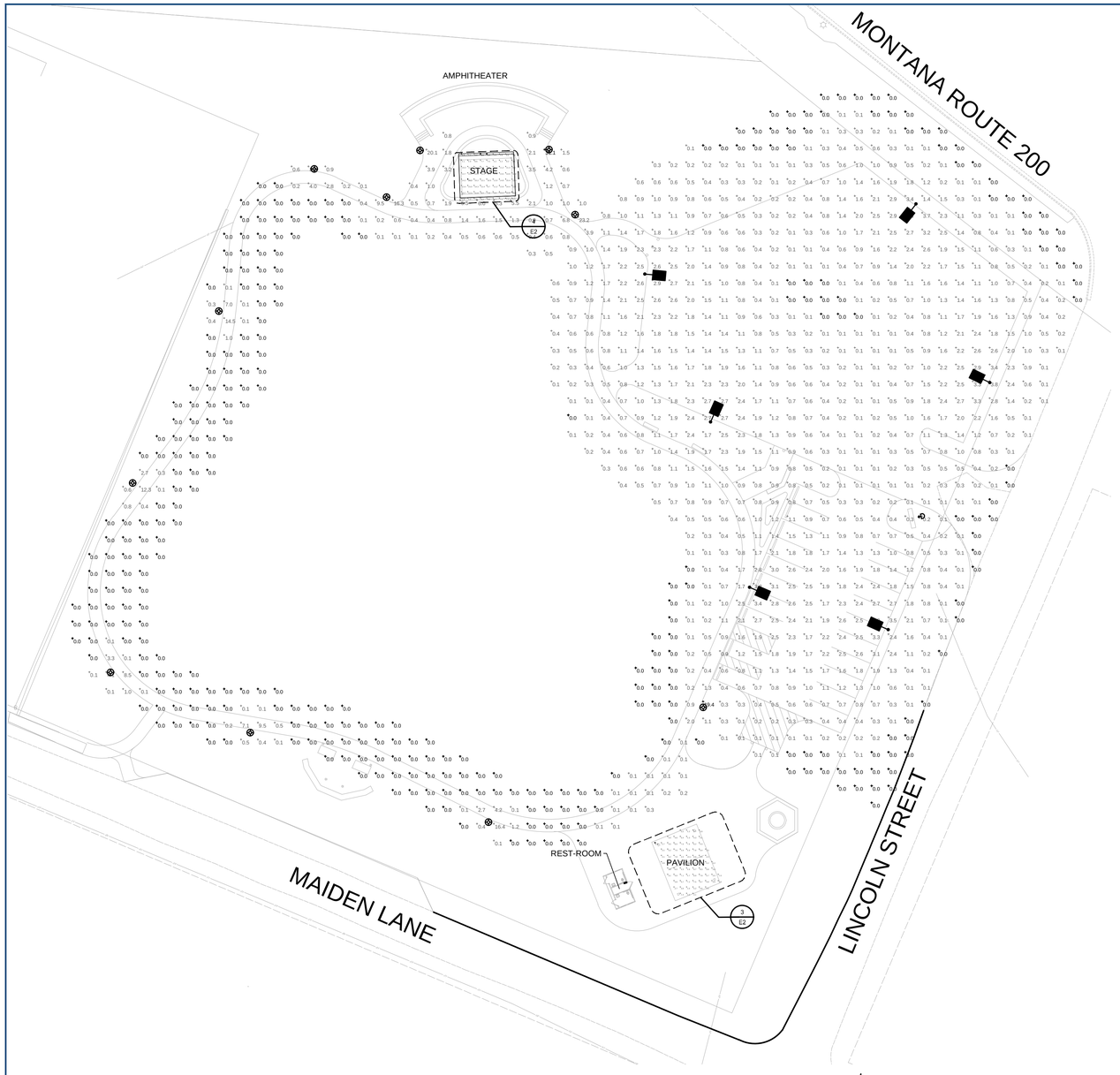

1 E3 SITE PHOTOMETRICS
1"=30'-0"

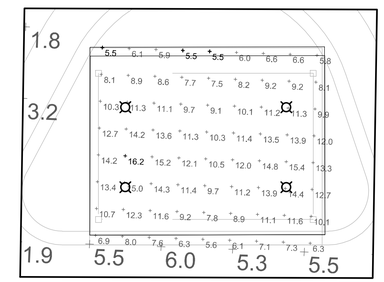

3 E3 STAGE PHOTOMETRICS
1/8"=1'-0"

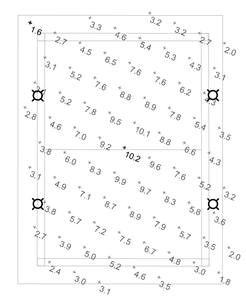

2 E3 PAVILION PHOTOMETRICS
1/8"=1'-0"

TRUE NORTH

WGM GROUP
WWW.WGMGROUP.COM

CTA
www.ctagroup.com
800.757.9522

MONTANA
CARL J. MAEHL
10488 PE
PROFESSIONAL ENGINEER

SITE PHOTOMETRICS
AINSWORTH PARK MASTER PLAN
THOMPSON FALLS, MONTANA

REVISIONS:

NO.	DESCRIPTION	DATE

PROJECT: 17-07-25
LAYOUT: D SIZE
SURVEYED:
DESIGN: DL
DRAFT: MK
APPROVE: CM
DATE:
SEPTEMBER 6, 2019

SHEET 20 OF 21

FILE: W:\Projects\170725\CAD Data\Survey\170725 BASE E.dwg

ELECTRICAL SPECIFICATIONS

DIVISION 26 - ELECTRICAL

SCOPE

This Work consists of, but is not necessarily limited to, the furnishing of all labor, equipment, appliances and materials and the performance of all operations in connection with the installation of all electrical work completed, in strict accordance with Specifications and/or Drawings, applicable codes, including incidental materials necessary and required for their completion.

260500 - COMMON WORK RESULTS

A. Intent of Drawings: Drawings are partly diagrammatic and do not show exact location of conduit unless specifically dimensioned.

B. Workmanship:

1. Work shall be accomplished by workmen skilled in particular trade, in conformance with best practices and accepted standards.

2. Work shall contribute to efficiency of operation, accessibility, maintenance and appearance. No part of installation shall interfere with operation of any other system or part of building.

3. Non-satisfactory work shall be corrected at no additional expense to Owner.

C. Responsibility:

1. The Electrical Contractor is responsible for installation of satisfactory and complete work in accordance with the intent of Drawings and Specifications. Provide, at no extra cost, incidental items required for completion of work even though not specifically mentioned or indicated in Specifications or on Drawings.

2. If, at any time, and in any case, change in location of conduit, outlets, fixtures, switches, panels, electrical equipment or associated components, etc., becomes necessary due to obstacles or installation of other trades, such required changes shall be made by Contractor at no extra cost.

3. Conflicts discovered during construction shall be immediately called to the attention of the Engineer for decision. Do not proceed with installation in area of question until conflict has been fully resolved.

4. Coordinate all electrical work with other trades to prevent unnecessary delays in the construction schedule.

5. Excavation and backfill required by electrical installations shall be accomplished by this Contractor. All backfill shall be properly compacted.

D. Provide temporary electrical power and lighting for all trades that require service during the course of this Project. Provide temporary service and distribution as required. Comply with the NFPA 70 and OSHA requirements.

E. Guarantee-Warranty: This Contractor shall and hereby does warrant and guarantee:

1. That all work executed under this Section will be free from defects of materials and workmanship for a period of one year from the date of final acceptance of this work.

2. The Contractor agrees to, at the Contractor's own expense, repair and replace all such defective materials and work and all other work damaged thereby which becomes defective during the term of warranty. Agreement does not include damages done by Owner.

E. Permits, Tests, Codes and Standards:

1. Electrical Contractor to pay for all permits and fees in connection with this work.

2. Work shall be in accordance with the most recent editions of adopted Local, State and National Codes and ordinances, the State Fire Marshal, and utility company regulations.

3. Electrical work shall conform to National Electrical Codes, latest editions, as a minimum requirement.

4. All material to conform with applicable standards.

F. Discrepancies: Prior to submitting Bid, Contractor shall refer any apparent discrepancies or omissions to engineer for clarification. The more stringent provisions shall take precedence where codes, Specifications and Drawings differ with one another. The Contractor shall Bid the more expensive requirement, unless discrepancy is addressed by Addendum prior to Bid.

G. Prior Approvals: All proposed substitutions shall be received by the Engineer 10 days prior to Bid. Priors received after 3 p.m. of the 10th day will be rejected. Supply technical data, photometrics and dimensional Drawings showing that substitutes are equal to product specified. Faxed prior approvals will not be accepted.

H. Shop Drawing Submittals:

1. In addition to distribution requirements for submittals specified in Division 1 Section "Submittals," submit Drawings for final and official approval through the General Contractor as listed below. If the Authority Having Jurisdiction requires Shop Drawings to have a Registered Engineers Stamp Affixed, this shall be the sole responsibility of the Contractor to acquire such stamp at Contactor's cost.

a. Engineer - 2 copies.

b. General Contractor - 2 copies.

c. Subcontractor - copies as required.

Additional copies may be required by individual Sections of these Specifications. Copies of price list sheets are not acceptable. Manufacturer's name and address must appear on each sheet. All copies shall be completely legible. Fax copies are unacceptable. All Shop Drawings shall be submitted in a 3-Ring binder.

2. Shop Drawings shall include a completed specification sheet of all equipment along with fabrication, installation drawings, setting diagrams, schedules, patterns, templates and similar Drawings. Installation drawings for fire alarm and clock/intercom shall be done with a computer cadd program and include no other system. A basic floor plan in electronic format can be obtained from the Project Engineer.

I. Project Close-Out Record Documents:

1. Provide three full size sets, unless more are called for under Division 1 (one for Engineer and one for Owner). In addition to requirements called for under Division 1, indicate the following installed conditions:

a. Actual location of all electrical service gear/feeders, panel/motor/special equipment feeders, all major underground or underslab conduits, all conduit stubs for future use, any change in branch circuitry from Drawings, key junction boxes and pull boxes not indicated on Drawings, any control locations or indicator lights not shown on Drawings.

b. Addendum items, change order items and all changes made to Drawings from Bidding phase through to Project completion.

c. Actual equipment and materials installed. Where manufacturer and catalog number are indicated on Drawings, generally or in fixture or equipment schedules, change to reflect actual products installed.

J. Change service panel and branch panel breaker locations and schedules to reflect actual installed conditions.

K. Supporting Equipment:

1. Unless otherwise indicated, fasten electrical items and their supporting hardware securely to the building structure, including conduits, raceways, cables, cabinets, panelboards, boxes, disconnect switches, and control components. Fasten by means of wood screws or screw-type nails on wood, toggle bolts on hollow masonry units, concrete inserts or expansion bolts on concrete or solid masonry, and machine screws, welded threaded studs, or spring-tension clamps on steel. Threaded studs driven by a power charge and provided with lock washers and nuts may be used instead of expansion bolts and machine or wood screws. Do not weld conduit, pipe straps, or items other than threaded studs to steel structures. In partitions of light steel construction, use sheet metal screws. All device boxes in sheetrock walls will be tight before, during and after installation of sheetrock.

2. Provide supports for electrical items in accordance with NFPA 70 and all other applicable codes.

3. Contractor responsible for providing watertight conduit penetrations at all watertight walls, floors roofs and membranes. Contractor also responsible to maintain fire rating of walls, floors, roofs and membranes penetrated.

H. Electrical Identification:

1. Apply circuit/control/item designation labels of engraved plastic laminate for disconnect switches, breakers, pushbuttons, pilot lights, panelboards and main control panel and similar systems.

2. Identify power junction and pull boxes with permanent marker, indicating voltage and contained circuits.

3. Identify underground exterior electrical circuits by installation of continuous underground plastic marker, 6 - 8 inches below grade.

260519 - CONDUCTORS AND CABLES

A. All conductors shall be provided and installed in accordance with NFPA 70, NEMA, UL NETA ATS-1995, and all other applicable codes. All conductors shall be copper and installed in conduit, unless otherwise noted. Aluminum conductors shall not be used.

B. Minimum conductor size for light and power shall be #12 AWG copper. Minimum conductor size for control wiring shall be #14 AWG copper unless noted otherwise on Drawings. #10 AWG and smaller shall be solid wire and #8 AWG and larger shall be stranded. Provide minimum #10 AWG for exterior lighting circuits.

C. AC cable and MC Cable are not allowed, unless otherwise noted.

D. Tighten electrical connectors and terminals, including screws and bolts, in accordance with manufacturer's published torque tightening valves or as specified in UL Codes.

E. Color code secondary service, feeder, and branch circuit conductors with factory applied color as follows:

120/240 Volts	Phase
Black	A
Red	B
White	Neutral
Green	Ground

260526 - GROUNDING AND BONDING

A. Install separate insulated equipment grounding conductors for feeder and branch circuits in compliance with NFPA 70 Article 250.

B. System Ground: Properly bond system neutral to system ground in the main service apparatus. All other neutral busses, bars, etc., must be isolated from ground. Establish the system ground as the grounding bus in main service apparatus by providing the proper ground bus in the main service apparatus and by providing the proper grounding conductor, installed in rigid steel conduit, bonded to the grounding bus and extended to the grounding point where the bond shall be made with the proper combination conduit/cable grounding clamp. Unless prohibited by Local Codes, the grounding point shall be established on the incoming water main, ufer ground and structural steel. Building metallic water piping system must be bonded, as required by codes, to the grounding bus in the main service apparatus. Carefully check the Drawings for additional grounding requirements and comply with NFPA 70 and all other applicable codes/standards.

260533 - RACEWAYS AND BOXES

A. Conduit Raceway:

1. Indoors, use the following, unless otherwise stated:

a. Concealed: EMT.

b. Exposed: EMT, IMC or RMC.

c. Connection to vibrating equipment: Flexible metal conduit.

2. Outdoors, use the following, unless otherwise stated:

a. Concealed: RMC or IMC.

b. Exposed: RMC or IMC.

c. Underground: Schedule 40 PVC with Schedule 80 PVC fittings.

d. Connection to Vibrating Equipment: Liquid tight flexible metal conduit.

3. ENT IS NOT ALLOWED.

4. Conceal conduit and cable, unless otherwise noted; conduit is permitted to be exposed in equipment rooms. All conduits shall have insulated ground wire installed. Do not install conduit embedded in slabs. EMT fittings shall be steel, compression or set screw type. All raceways shall be installed and supported in accordance with NFPA 70 and applicable codes.

B. Outlet Boxes:

1. Conform to UL 514A, "Metallic Boxes, Electrical," and UL 514B, "Fittings for Conduit and Outlet Boxes." Outlet boxes shall be metallic and installed flush in all areas, except mechanical rooms, above lay-in ceilings, or as otherwise indicated. Minimum size to be 4 inches square by 2-1/8 inches deep. Boxes shall be of type, shape, size and depth to suit each location and application. All fittings shall be steel.

C. Pull and Junction Boxes:

1. Comply with UL 50, "Electrical Cabinets and Boxes," for boxes over 100 cubic inches volume. Boxes shall have screwed or bolt-on covers, shall be suitable for the intended application and shall be labeled.

D. All materials shall be UL listed, appropriate for intended application. Entire raceway system shall be in accordance with NFPA 70, ANSI, NEMA, UL, and all other applicable codes.

262716 - SERVICE ENTRANCE

A. Provide meter socket in accordance with serving utility company's requirements. Meter shall be provided by serving utility.

B. Install service-entrance equipment as indicated, in accordance with equipment manufacturer's written instructions, and with recognized industry practices, to ensure that service-entrance equipment fulfills requirements. Comply with applicable installation requirements of NFPA 70, UL, ANSI, IEEE, and NEMA standards.

C. Tighten electrical connectors and terminals, including screws and bolts, in accordance with equipment manufacturer's published torque tightening values for equipment connectors. Where manufacturer's torquing requirements are not indicated, tighten connectors and terminals to comply with tightening torques specified in UL Standards 486A, and the NFPA 70.

262416 - PANELBOARDS

A. Manufacturer: Siemens, Square-D, GE or Cutler Hammer.

B. Load centers are acceptable for restroom panel.

C. Provide typed circuit schedules for existing panelboards where loads have changed and framed, typed circuit schedules for all new panelboards with identification of items controlled by each individual breaker. Indicate room numbers of items controlled or room name where appropriate for Owner's convenience.

262726 - WIRING DEVICES

A. Acceptable Manufacturers: Pass & Seymore, Bryant, GE, Hubbell, Leviton.

B. Devices:

1. General light switches shall be 20 amp, 120/277 volt AC rated and Industrial Grade.

2. General receptacles shall be self grounding 5-20R and Industrial Grade. GFCI receptacles shall be 20 amp feed through type with two utilization points. Do not connect downstream devices to load side of GFCI.

3. Dimmers shall be Lutron Nova Series, sized appropriately for load.

4. General device color shall be as selected by architect.

C. Device Plates:

1. Device plates shall have opening for device intended and shall be stainless steel.

2. Weatherproof receptacle covers shall be a corrosion resistant die cast metal, minimum 3 inch deep, flip cover with latch and with pad locking provisions.

265100 - LIGHTING

A. Manufacturer, model, style, color, size, etc., as scheduled. If no color has been selected, provide fixture with the standard finish as published by the manufacturer. All fixtures to be supplied as complete, housing, sockets, lamp holders, internal working, wire guards, lens guards, diffusing materials or lenses, pendants, hangers, canopies, aligners, end caps, ballasts and emergency battery packs, plaster frames, recessing boxes, hold down clips, anchor bolts, etc. Install plumb and true, free of light leaks, warps, dents and other irregularities.

B. Submit Shop Drawings in accordance with the "Common Work Results" section.

WGM GROUP
WWW.WGMGROUP.COM

CTA
www.ctagroup.com
800.757.9522

ELECTRICAL SPECIFICATIONS
AINSWORTH PARK MASTER PLAN
THOMPSON FALLS, MONTANA

REVISIONS:

NO.	DESCRIPTION	DATE

PROJECT: 17-07-25
LAYOUT: D SIZE
SURVEYED:
DESIGN: DL
DRAFT: MK
APPROVE: CM
DATE:
SEPTEMBER 6, 2019

FILE: W:\Projects\170725\CAD Data\Survey\170725 BASE E.dwg