KILEWS®

KILEWS WEST USA

Brushless Electric Screwdrivers & Accessories

www.kilewswest.com

TABLE OF CONTENTS

3	**Auto Shut-Off 12V Electric Screwdrivers** 0.01–0.34 Nm (0.07–3.08 in-lbs)
4–6	**Auto Shut-Off 32V Electric Screwdrivers** 0.02–2.94 Nm (0.2–26.0 in-lbs)
7	**Slow Start & I/O Control Modules**
8	**Counting Controllers**
9	**Torque Meters — KTM-15, KTM-150, KTM-250** 0.01–24.5 Nm (0.09–217 in-lbs)
10–11	**32V/40VDC Brushless Drivers with Internal Counters** 0.15–4.90 Nm (1.33–43.37 in-lbs)
12–15	**Auto Shut-Off 115V Electric Screwdrivers** 0.15–4.9 Nm (1.33–43.4 in-lbs)
16–17	**Screw Feeders For Manual Pickup & Automation**
18–19	**Tool Support — Torque Arms, Tool Stand, Spring Balancers**

BRUSHLESS AUTO SHUT-OFF 12V ELECTRIC SCREWDRIVERS

Torque Range:

0.01–0.34 Nm (0.07–3.08 in-lbs)

Features:

- Consistent Torque Output — Torque Accuracy ±5%*
- Clean, Brushless Motor Technology
- Dependable, Long Lifespan
- Requires 12VDC Power Supply (Model SKP-12HL)
- Two Speed Selections Available
- Lever Start, Push Button Reverse
- ESD Housing
- Includes 2 Meter Tool Cable, Driver Bits (PH), and Torque Fixing Ring
- Bit Holder Accepts 4mm Round Winged Bits (2 Included)

*Factory test values — actual torque results may vary depending on the specific application, operator input, and test equipment used.

SKP-12HL

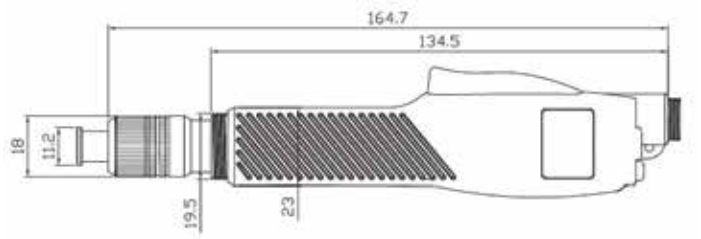

Dimensions (mm)

Model	Bits Included
SKD-B100L/LS4	PH#00, #0
SKD-B103L/LS4	PH#0, #1

Accessories

Model	Torque Fixing Ring	2m, 3-Pin Cable	Spring Balancer
SKD-B100 Series	KC-9S	AA50001-27N	KL-600

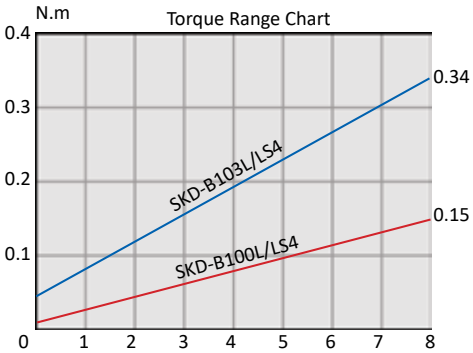

Specifications

Model (ESD Housing)	Torque (Nm)	Torque (in-lbs)	Speed (rpm)	Start Type	Power Consum.	Weight	Use with Power Supply
SKD-B100L-ESD	0.008–0.15	0.07–1.32	1000/700	Lever	15W	170g 0.4lbs	SKP-12HL
SKD-B100LS4-ESD	0.008–0.15	0.07–1.32	280/200				
SKD-B103L-ESD	0.05–0.34	0.44–3.08	1000/700				
SKD-B103LS4-ESD	0.05–0.34	0.44–3.08	280/200				

Ph. 772.293.0071
sales@kilewswest.com

BRUSHLESS AUTO SHUT-OFF 32V ELECTRIC SCREWDRIVERS

Torque Range:

0.02–2.94 Nm (0.2–26.0 in-lbs)

Features:

- Consistent Torque Output — Torque Accuracy ±3%*
- Clean, Brushless Motor Technology
- Dependable, Long Lifespan
- Requires 32VDC Power Supply
- Two Speed Selections Available
- Lever or Push Start Models
- Standard or ESD Housing Material
- Includes 2 Meter Tool Cable, Driver Bits (PH), and Torque Fixing Ring

*Factory test values — actual torque results may vary depending on the specific application, operator input, and test equipment used.

Model	Bits Included
SKD-B2	PH#00, #0, #1
SKD-B5	PH#1, #2
SKD-B7	PH#2 (x2)

1/4" HEX BIT HOLDER

Model (Standard Housing)	Model (w/ESD Housing)	Torque Range Nm	Torque Range in-lbs	Speed (rpm)	Start Type	Power Consum.	Weight
SKD-BN2003L	SKD-BN2003L-ESD	0.02–0.34	0.2–3.0	1000/700	Lever	25W	385 g 0.8 lbs
SKD-BN2003LS5	SKD-BN2003LS5-ESD			500/350			
SKD-BN2007L	SKD-BN2007L-ESD	0.05–0.69	0.5–6.1	1000/700			
SKD-BN2010L	SKD-BN2010L-ESD	0.10–0.98	0.9–8.7	1000/700			
SKD-BN5012L	SKD-BN5012L-ESD	0.15–1.18	1.3–10.4	1000/700		55W	520 g 1.1 lbs
SKD-BN5012LF	SKD-BN5012LF-ESD			2000			
SKD-BN5012P	SKD-BN5012P-ESD	0.20–1.18	1.8–10.4	1000/700	Push		
SKD-BN5012PF	SKD-BN5012PF-ESD			2000			
SKD-BN5017LF	SKD-BN5017LF-ESD	0.29–1.67	2.6–14.8	2000	Lever		
SKD-BN5017PF	SKD-BN5017PF-ESD				Push		
SKD-BN5019L	SKD-BN5019L-ESD	0.29–1.86	2.6–16.5	1000/700	Lever		
SKD-BN5019P	SKD-BN5019P-ESD				Push		
SKD-BN7022LF	SKD-BN7022LF-ESD	0.49–2.16	4.3–19.1	2000	Lever	55W	800 g 1.8 lbs
SKD-BN7022PF	SKD-BN7022PF-ESD				Push		
SKD-BN7030L	SKD-BN7030L-ESD	0.98–2.94	8.7–26.0	1200/900	Lever		
SKD-BN7030P	SKD-BN7030P-ESD				Push		

Power Supply	SKP-32BC-60W	SKP-BE32HL
Use with driver models	SKD-BN2_L SKD-BN5_L/P	SKD-BN5_LF/PF SKD-BN7_L(F)/P(F)
Input	100–240VAC 50/60Hz	
Output	24/32VDC	
Dimensions	145 x 60 x 35 mm	195 x 76 x 56 mm
Weight	250g / 0.6lbs	450g / 1lbs

POWER SUPPLY CONVERTS AC INPUT TO 32VDC REQ'D TO PROPERLY POWER TOOL (cETLus LISTED)

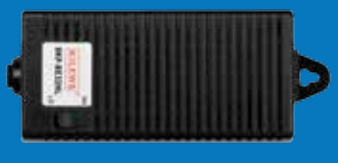

Ph. 772.293.0071
sales@kilewswest.com

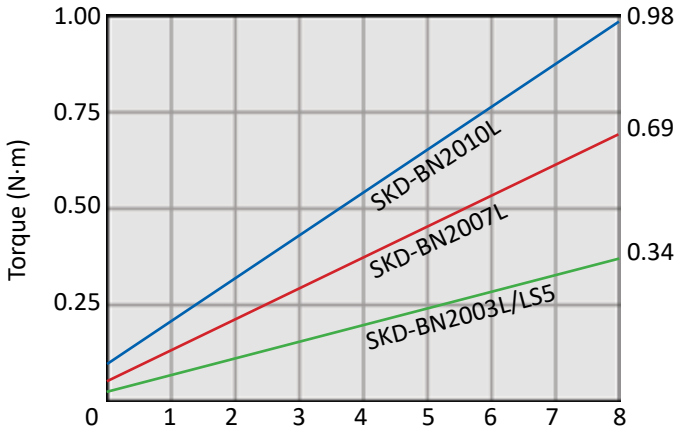

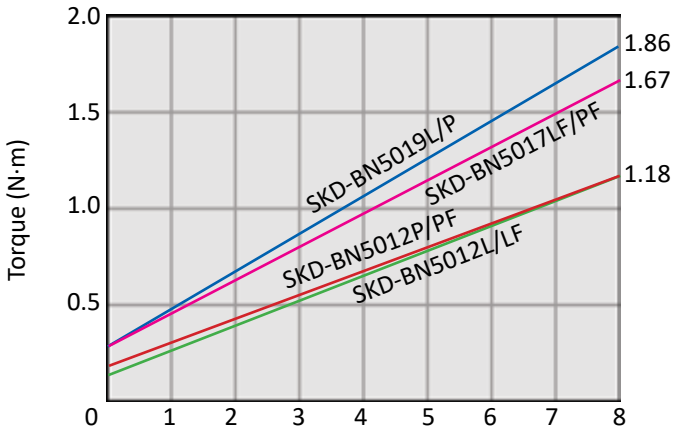

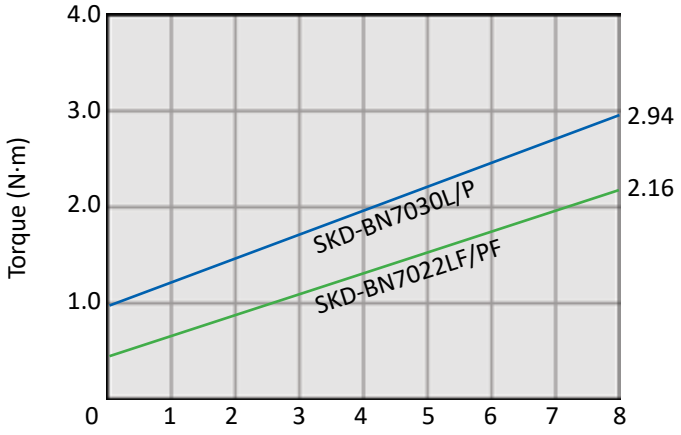

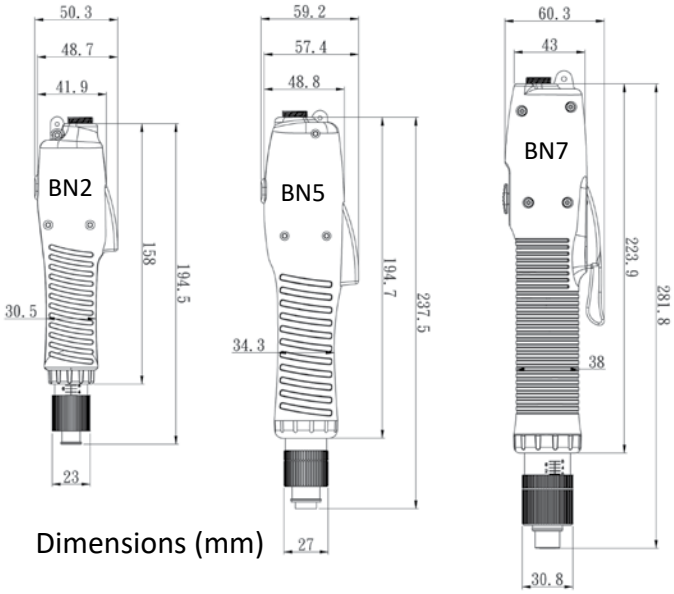

Dimensions (mm)

Accessories

Model	Torque Fixing Ring	Torque Adjust Tool	Suspension Rack	Spring Balancer
SKD-BN20__L	KC-13C	KW-4	KH-5	KL-600
SKD-BN20__L-ESD	KC-13S			
SKD-BN50__L(F)	KC-6C	KW-3	KH-4 (KH-2 when using torque fixing ring)	KL-1200
SKD-BN50__L(F)-ESD	KC-6S			
SKD-BN50__P(F)	KC-6C			
SKD-BN50__P(F)-ESD	KC-6S			
SKD-BN70__L(F)	KC-2	KW-1	KH-2	
SKD-BN70__L(F)-ESD	KC-2S			
SKD-BN70__P(F)	KC-2			
SKD-BN70__P(F)-ESD	KC-2S			

REPLACEMENT TOOL CABLES (2M CABLE INCLUDED W/ DRIVER)

2m	3m	3m coiled	6m
AA50001-56	AA50001-44	AA50001-105	AA50001-45

-RA RIGHT ANGLE LEVER START DRIVERS

Model (Standard Housing)	Model (w/ESD Housing)	Torque Range		Speed (rpm)	Angle Head Part #	Power Consum.	Weight
		Nm	in-lbs				
SKD-BN5012L-RA	SKD-BN5012L-ESD-RA	0.11–0.83	0.9–7.3	1000/700	KL-2	55W	770 g 1.7 lbs
SKD-BN5012LF-RA	SKD-BN5012LF-ESD-RA			2000			
SKD-BN5017LF-RA	SKD-BN5017LF-ESD-RA	0.20–1.17	1.8–10.4	2000			
SKD-BN5019L-RA	SKD-BN5019L-ESD-RA	0.20–1.30	1.8–11.6	1000/700			
SKD-BN7022LF-RA	SKD-BN7022LF-ESD-RA	0.34–1.51	3.0–13.4	2000	KL-1		1050 g 2.3 lbs
SKD-BN7030L-RA	SKD-BN7030L-ESD-RA	0.68–2.06	6.1–18.2	1000/700			

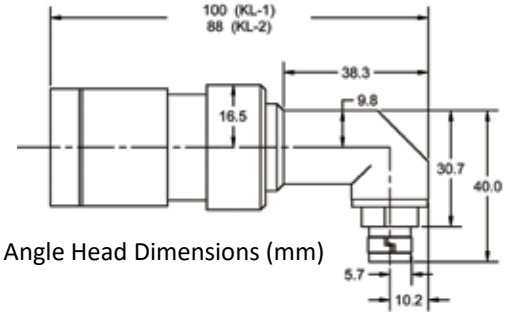

Angle Head Dimensions (mm)

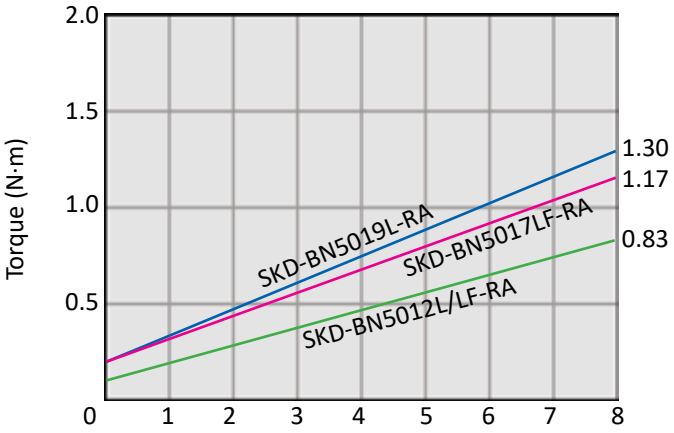

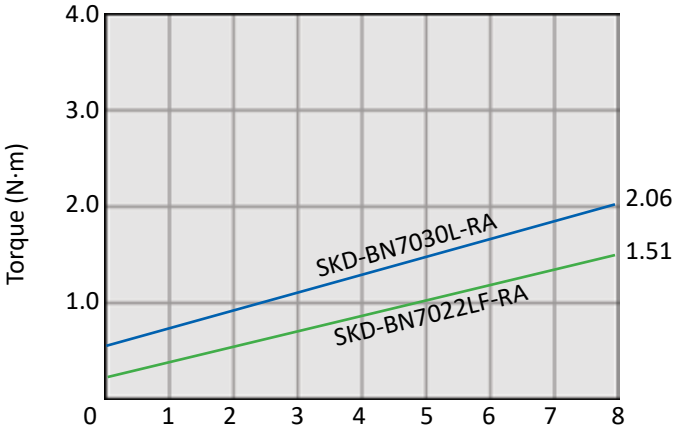

Ph. 772.293.0071
sales@kilewswest.com

SLOW START & I/O CONTROL MODULES

Features:

- Adjustable slow start speed, which can be set to one of ten values (L0–L9) from 30% to 100% of full speed
- Slow start time can be set up to 9.9 seconds
- Provides three available outputs: tool running, clutch activated and tool in reverse (MOS relay switches)
- Installs in-line between a Kilews SKD-BN series 32VDC screwdriver and a BN series power controller
- Automatic bypass of slow start function when tool is in reverse
- Manual bypass switch will disable slow start function if required
- KL-SCBSN includes a 3M long shielded tool cable to use in place of the unshielded cable included with the screwdriver

KL-SSBN

KL-SCBSN

Specifications		
Model	**KL-SSBN**	**KL-SCBSN**
Dimensions (L x W x H)	58 x 95 x 35 mm 2.3 x 3.7 x 1.4 in	103 x 100 x 32 mm 4.1 x 3.9 x 1.3 in
Weight	130 g / 0.3 lbs	180 g / 0.4 lbs
Compatible Tools	SKD-BN Series Screwdrivers	
Available Inputs	—	Remote Start, Remote Reverse, Remote Enable / Disable
Available Relay Outputs	Tool Running, Clutch Activated, Tool in Reverse	
Slow Start Time	0.1–9.9 s	0.0–9.9 s
Slow Start Speed	30%–100%	

SKD-BN Series 32V Screwdriver

+

Slow Start Module

+

BN Series Power Controller

Ph. 772.293.0071
sales@kilewswest.com

SKP-BC32HL-100 COUNTING CONTROLLER

Features:

- Compatible with SKD-BN2, -BN5, and -BN7 series tools
- Selectable slow start speed and time
- Large LED display shows screw count values
- Externally accessible I/O connections
- Programmable batch counting with audible buzzer indicating batch complete
- Programmable time window for comparison with actual fastening cycle time — LEDs indicate OK/NG rundown cycle
- Optional timed auto-reverse for applications requiring back-out after fastening
- Locks to limit access to program modifications
- CE / RoHS / ETL compliant
- Includes a 3M long shielded tool cable to use in place of the unshielded cable included with the screwdriver

Parameters are set up on the SKP-BC32HL-100 using the four button keypad and LED display panel. A simple program loop provides access to settings for slow start speed and time, batch count quantity, and min/max allowable rundown times. During normal operation, the large two-digit display shows the current screw count value and also provides LED indication of whether the rundown was good (OK) or no good (NG) based on the time window parameters that have been programmed into the controller.

Specifications	
Model	**SKP-BC32HL-100**
Compatible Models	SKD-BN2, SKD-BN5, SKD-BN7
Dimensions (L x W x H)	200 x 130 x 100 mm 7.9 x 5.1 x 3.9 in
Weight	1.6 kg / 3.5 lbs
Input Voltage	100–240VAC, 50/60Hz, 1.2A
Output Voltage	32/24VDC, 60W
Outlets	1
Count (per batch)	1–99 fasteners
Speeds	Hi / Lo
External Inputs	Remote Start / Reverse / Disable / Confirm / Enable / Clear
External Outputs	OK / NG / OK ALL
Slow Start Time	0.0–9.9 s
Slow Start Speed	30%–100%
Approvals	CE / RoHS / ETL

TORQUE METERS: KTM-15, KTM-150, KTM-250

KTM-150

Features:

- Ideal for electric screwdrivers
- Easy to set-up and use
- Comes with a certificate of calibration
- Data export via USB 1.0 (cable not included)
- Stores up to 800 readings
- Selectable measuring units: Lbf.In, Kgf.cm, Nm
- Portable — Rechargeable battery — Long life
- Auto zero feature
- Program high and low torque limits
- Display readings/statistics — Minimum, Maximum and Average Torque for a group of rundowns
- Select between peak, real time, and peak down (initial peak) measuring modes
- Measures both clockwise and counterclockwise torque
- Includes an AC charger and rundown joints, all in a protective carrying case

Specifications				
Model		**KTM-15**	**KTM-150**	**KTM-250**
Measuring Ranges	kgf.cm	0.1–15.0	1.5–150.0	3.0–250.0
	lbf.in	0.09–13.02	1.3–130.02	2.6–217.0
	N.m	0.01–1.47	0.15–14.7	0.29–24.5
Accuracy		±0.5% (or ±1 digit)		
Power Supply		4 x 1.2V Battery		
Charging Time		Within 3 hours		
Continuous Operation At Full Charge		Approx. 12 hours		
Battery		Rechargeable ~300 times, depending on conditions		
Dimensions (L x W x H)		230 x 125 x 65 mm	230 x 125 x 65 mm	210 x 160 x 45 mm
Weight		1.8 kg / 4 lbs	1.8 kg / 4 lbs	2.0 kg / 4.4 lbs
Special Charger		Input AC100–240V, 50/60Hz Output DC12V 400mA		
Included Test Joints		AJ-3 AJ-15	AJ-15K AJ-50K AJ-150	AJ-250

Ph. 772.293.0071
sales@kilewswest.com

BRUSHLESS DRIVERS WITH INTERNAL COUNTERS

The Kilews SKD-BE Series tools integrate the performance of a DC Shut-Off Clutch Brushless Screwdriver with a programmable, handle-mounted Batch Counter. Each tool includes driver bits (PH), a torque fixing ring, and a 2m cable to connect to a 32V or 40VDC Power Supply (sold separately).

SKD-BE850-ESD

Features:

- Batch count value can be set from 0–99 screws/batch. Screwdriver will count down by one each time a good fastener rundown is completed.
- LED display shows the current screw count value
- Programming mode may be used to set up parameters for assembly or locked to prevent tampering
- User-configurable time window for fastener installation: Only fastener rundowns which occur within the specified window will be accepted as good (OK) and cause the count to increment. Rundowns completed outside the time window will be considered no good (NG), as might occur if the screw was cross-threaded (time too short) or stripped (time too long).
- Visual and audible indicators are available to let the operator know if the rundown was OK or NG, and when the batch has been completed
- Can be hard-wired with additional output signal cable (included) to output rundown status to a PLC (consult Kilews West or a distributor for further details on connecting output signals)

Model	Bits Included
SKD-BE5	PH#1, #2
SKD-BE8	PH#2 (x2)

Specifications

Model (w/ESD Housing)	Torque Range		Speed (rpm)	Start Type	Power Consum.	Weight	Use with Power Supply
	Nm	in-lbs					
SKD-BE203LS5-ESD	0.02–0.34	0.18–3.01	500	Lever	25W	330 g 0.73 lbs	SKP-32BC-60W
SKD-BE207L-ESD	0.05–0.69	0.44–6.10	1000				
SKD-BE210L-ESD	0.10–0.98	0.89–8.67	1000				
SKD-BE210P-ESD	0.2–0.98	1.77–8.67	1000	Push			
SKD-BE512L-ESD	0.15–1.18	1.33–10.44	1000	Lever	55W	580 g 1.3 lbs	SKP-32BC-60W or SKP-BE32HL ('F' fast tools)
SKD-BE512LF-ESD	0.15–1.18	1.33–10.44	2000				
SKD-BE517LF-ESD	0.29–1.67	2.57–14.78	2000				
SKD-BE519L-ESD	0.29–1.86	2.57–16.46	1000				
SKD-BE512P-ESD	0.2–1.18	1.77–10.44	1000	Push			
SKD-BE512PF-ESD	0.2–1.18	1.77–10.44	2000				
SKD-BE517PF-ESD	0.29–1.67	2.57–14.78	2000				
SKD-BE519P-ESD	0.29–1.86	2.57–16.46	1000				
SKD-BE830L-ESD	0.98–2.94	8.67–26.02	1000	Lever	90W	820 g 1.8 lbs	SKP-40BHL
SKD-BE830LF-ESD	0.98–2.94	8.67–26.02	2000				
SKD-BE850L-ESD	1.96–4.90	17.35–43.37	1000		120W		
SKD-BE830P-ESD	0.98–2.94	8.67–26.02	1000	Push	90W		
SKD-BE830PF-ESD	0.98–2.94	8.67–26.02	2000				
SKD-BE850P-ESD	1.96–4.90	17.35–43.37	1000		120W		

COMING SOON

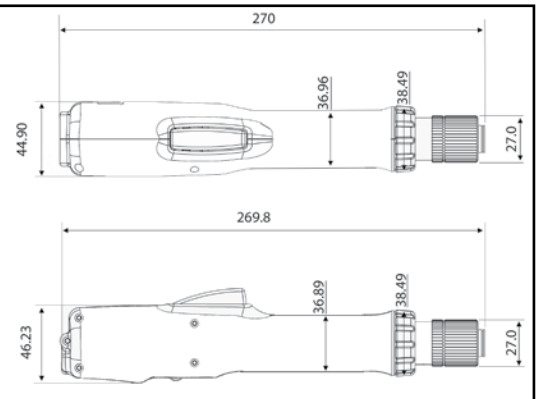

Dimensions (mm) for SKD-BE5 Series

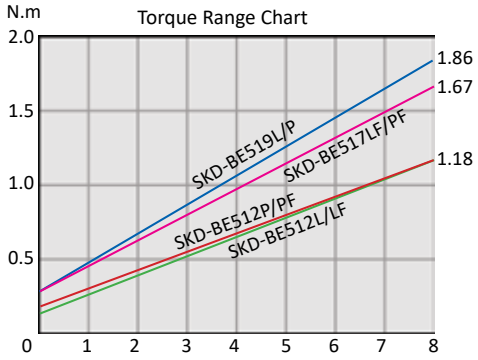

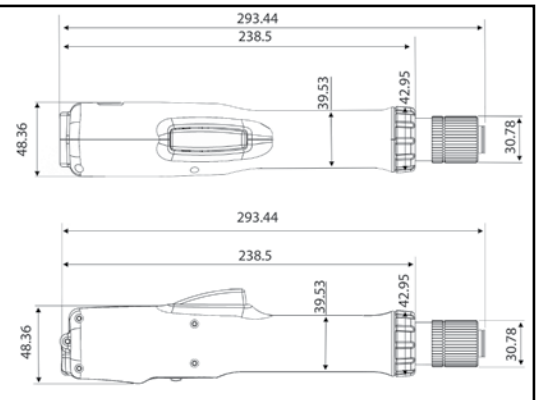

Dimensions (mm) for SKD-BE8 Series

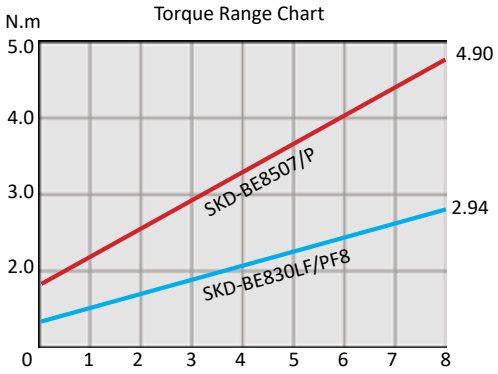

Accessories

Model	Torque Fixing Ring	Torque Adjust Tool	Suspension Rack	Spring Balancer
SKD-BE5	KC-6S	KW-3	KH-4	KL-1200
SKD-BE8	KC-7S	KW-1	KH-2	

Ph. 772.293.0071
sales@kilewswest.com

SK-B5 SERIES AUTO SHUT-OFF 115VAC SCREWDRIVERS

Torque Range:

0.15–2.16 Nm (1.33–19.12 in-lbs)

Features:

- Consistent Torque Output — Torque Accuracy ±3%*
- Clean, Brushless Motor Technology
- Dependable, Long Lifespan
- Outperforms Brush-type Drivers
- Plugs Directly into 115VAC Receptacle
- Input 110–120VAC, 50/60Hz, 48W
- Integral 3m Power Cord w/ US Plug
- Approval — ETL Listed (cETLus)
- Lever or Push Start Models
- Right Angle Version Available

*Factory test values — actual torque results may vary depending on the specific application, operator input, and test equipment used.

Each Screwdriver Includes:

2x Driver Bits (PH #2)

Torque Fixing Ring

Suspension Bail

Model	Torque Range			Speed (rpm)	Start Type	Screw Diameter (mm)		Length (mm)	Weight
	Nm	kgf-cm	in-lbs			Machine	Tapping		
SK-B5112L	0.15–1.18	1.5–12	1.33–10.44	1200	Lever	1.6–3.0	1.6–2.6	245	470 g 1.0 lbs
SK-B5112LF				2000					
SK-B5112P	0.2–1.18	2–12	1.77–10.44	1200	Push				
SK-B5112PF				2000					
SK-B5117LF	0.29–1.67	3–17	2.57–14.78	2000	Lever	1.6–3.5	1.6–3.0		
SK-B5117PF					Push				
SK-B5122L	0.39–2.16	4–22	3.47–19.12	1200	Lever	2.3–4.0	2.3–3.5		
SK-B5122P					Push				

Ph. 772.293.0071
sales@kilewswest.com

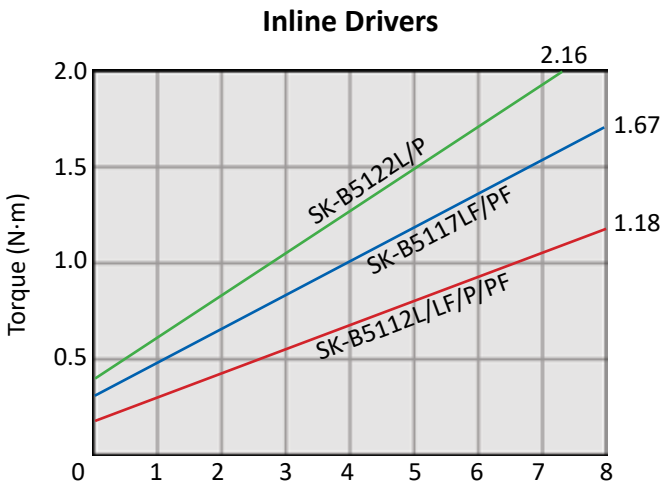

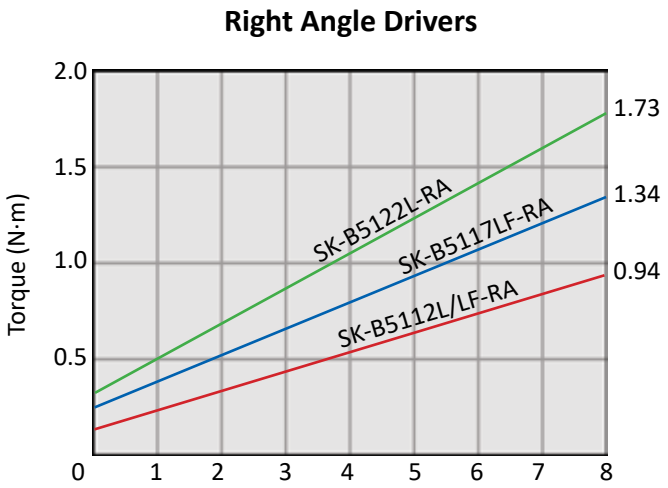

-RA RIGHT ANGLE LEVER START DRIVERS

Model	Torque Range			Speed (rpm)	Screw Diameter (mm)		No-Load Current	Angle Head Part	Weight
	Nm	kgf-cm	in-lbs		Machine	Tapping			
SK-B5112L-RA	0.12–0.94	1.2–9.6	1.06–8.35	1200	1.6–3.0	1.6–2.6	0.4A	KL-2	720 g 1.6 lbs
SK-B5112LF-RA				2000					
SK-B5117LF-RA	0.23–1.34	2.4–13.6	2.06–11.82	2000	1.6–3.5	1.6–3.0			
SK-B5122L-RA	0.31–1.73	3.2–17.6	2.77–15.296	1200	2.3–4.0	2.3–3.5			

Accessories

Torque Fixing Ring	Suspension Rack	Spring Balancer
KC-6C	KH-4 (For Inline Tools Only)	KL-1200

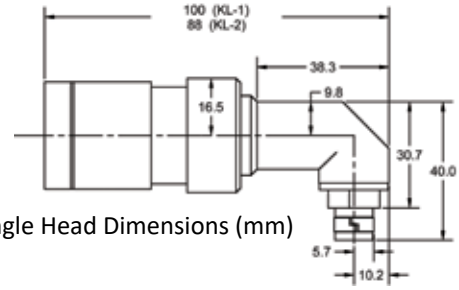

Angle Head Dimensions (mm)

Ph. 772.293.0071
sales@kilewswest.com

SK-B6 SERIES AUTO SHUT-OFF 115VAC SCREWDRIVERS

Torque Range:
0.49–4.9 Nm (4.34–43.4 in-lbs)

Features:

- Consistent Torque Output — Torque Accuracy ±3%*
- Clean, Brushless Motor Technology
- Dependable, Long Lifespan
- Outperforms Brush-type Drivers
- Plugs Directly into 115VAC Receptacle
- Input 110–120VAC, 50/60Hz, 48W
- Integral 3m Power Cord w/ US Plug
- Approval — ETL Listed (cETLus)
- Lever or Push Start Models
- Right Angle Version Available

*Factory test values — actual torque results may vary depending on the specific application, operator input, and test equipment used.

Each Screwdriver Includes:

2x Driver Bits (PH #2)

Torque Fixing Ring

Suspension Bail

Model	Torque Range			Speed (rpm)	Start Type	Screw Diameter (mm)		Length (mm)	Weight
	Nm	kgf-cm	in-lbs			Machine	Tapping		
SK-B6125L	0.49–2.45	5–25	4.34–21.7	1000	Lever	2.6–4.0	2.6–3.5	280	740 g 1.6 lbs
SK-B6125LF				2000					
SK-B6125P				1000	Push				
SK-B6125PF				2000					
SK-B6150L	1.96–4.9	20–50	17.4–43.4	1000	Lever	4.0–5.0	≤4.0		
SK-B6150P					Push				

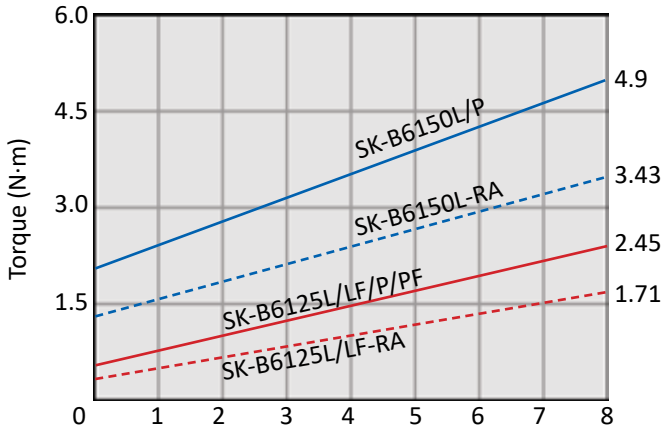

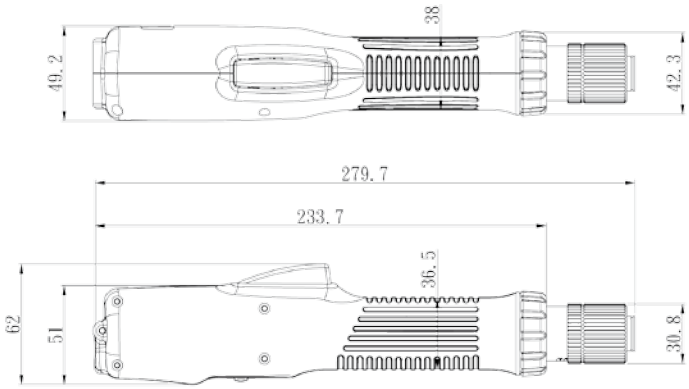

Tool Dimensions (mm)

-RA RIGHT ANGLE LEVER START DRIVERS

Model	Torque Range			Speed (rpm)	Screw Diameter (mm)		No-Load Current	Angle Head Part	Weight
	Nm	kgf-cm	in-lbs		Machine	Tapping			
SK-B6125L-RA	0.34–1.71	3.5–17.5	3.0–15.2	1000	2.6–4.0	2.6–3.5	90W	KL-1	990 g 2.2 lbs
SK-B6125LF-RA				2000					
SK-B6150L-RA	1.37–3.43	14–35	12.2–30.4	1000	4.0–5.0	≤4.0	120W		

Accessories

Torque Fixing Ring	Suspension Rack	Spring Balancer
KC-7C	KH-2L (For Inline Tools Only)	KL-1200

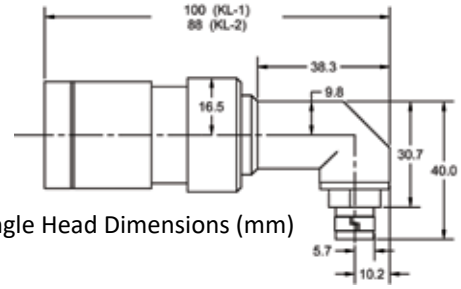

Angle Head Dimensions (mm)

Ph. 772.293.0071
sales@kilewswest.com

SCREW FEEDERS FOR MANUAL PICKUP

Features:

- Improve productivity — screw dispensed for easy pick-up
- Magnetic pick-up of ferrous screws
- Precise vibration control allows feeding of many different screw types and sizes
- Individual driver motors for vibration and feeding
- Auto shut-off of vibration/feed when not in use
- Quiet operation — simple service and set-up
- Great value — very cost effective way to increase productivity
- Small size — does not clutter work space
- Includes AC adapter, set-up tools and shims

KFR-1050

KFA-0820H

Specifications			
Model	**KFR-1050**	**KFA-0850H**	**KFA-0820H**
Dimensions (L x W x H)	182 x 126 x 147 mm	182 x 124 x 150 mm	160 x 82 x 112 mm
Weight (w/o adapter)	2.49kg / 5.5lbs	3.1kg / 6.8lbs	1.53kg / 3.3lbs
Power Source	100–240VAC	100–240VAC	100–240VAC
AC Adapter	15VDC	12VDC	12VDC
Applicable Screw	M1.0–M5.0 (Adjustable)	M1.2 / M1.4 / M1.7 / M2.0 / M2.3 / M2.6 / M3.0 / M3.5 (Specify size when ordering)	M0.8 / M1.0 / M1.2 / M1.4 / M1.7 / M2.0 (Specify size when ordering)
Applicable Screw Thread Length	≤19 mm	≤12 mm	≤5 mm

COMING SOON

To order KFA-0820H, add screw size to model number as a suffix (eg.- for M1.4 screws specify ‘KFA-0820H-1.4’)

Features:

- Ideal for robotic applications — magnetic or vacuum pick-up
- Signal output when screw is ready for pick-up
- Brushless driver motors for vibration and feeding
- Quiet operation — simple service and set-up
- Integrated screw counter with LED displays for assembly process feedback
- Small size — does not clutter work space
- Includes AC adapter, set-up tools and shims

KFA-0830

KFA-0820A

Specifications			
Model	**KFA-0850A**	**KFA-0830**	**KFA-0820A**
Dimensions (L x W x H)	182 x 124 x 150 mm	182 x 124 x 146 mm	160 x 82 x 112 mm
Weight (w/o adapter)	3.1kg / 6.8lbs	3.0kg / 6.6lbs	1.46kg / 3.2lbs
Power Source	100–240VAC	100–240VAC	
AC Adapter	12VDC	12VDC	
Applicable Screw	M1.2 / M1.4 / M1.7 / M2.0 / M2.3 / M2.6 / M3.0 / M3.5 (Specify size when ordering)	M0.8 / M1.0 / M1.2 / M1.4 / M1.7 / M2.0 / M2.3 / M2.6 / M3.0 (Specify size when ordering)	M0.8 / M1.0 / M1.2 / M1.4 / M1.7 / M2.0 (Specify size when ordering)
Applicable Screw Thread Length	≤12 mm	≤15 mm	≤5 mm

COMING SOON

To order the above models, add screw size to the model number as a suffix (eg.- for a KFA-0820A with M1.4 screws specify 'KFA-0820A-1.4')

Ph. 772.293.0071
sales@kilewswest.com

TORQUE ARMS

KP-AUX5

- Torque reaction arm complete with work platform
- Painted steel work platform is 450 x 320 mm
- Ball bushing provides smooth vertical travel
- Includes tool balancer to support weight of the screwdriver
- Smooth, fluid motion of arm is ideal for precise positioning of lower torque tools
- Special tool holder is designed to hold SKD-BN5 series screwdrivers

KP-AUX5

KP-AUX-1T

- Parallel arm design, keeps screwdriver perpendicular to work surface
- Nitrogen gas shock supports the weight of the tool
- Optional KP-VA1 adapter is available to allow tool to be positioned at different angles

Specifications		
Model	**KP-AUX-1T**	**KP-AUX5**
Description	Suspension Arm	Suspension Station
Working Range (mm)	50-830	50-340
Compatible with	SKD-BE8 Series (Consult factory for adapters for use with other models)	SKD-BN500 Series SKD-BE500 Series SKD-5000 Series
Optional Accessory	KP-VA1 Adjustable Tool Holder	KL-1200 Spring Balancer

KP-AUX-1T

TELESCOPIC TORQUE ARMS

- Telescoping torque reaction arm with a wall mount bracket
- Smooth linear motion and wide range of travel
- Constructed from light weight aluminum alloy
- Tool holder accommodates a range of tool diameters

Specifications		
Model	**KP-AUX-B50-1000**	**KP-AUX-B50-1200**
Max Torque (Nm)	50	
Working Range (mm)	430–1000	500–1200
Tool Diameter (mm)	38.5–52	
Type	Wall-Mounted	
Compatible with	All Kilews West Drivers	

KW-TOOL STAND

- Supports up to 2.3kg (5lbs)
- Aluminum construction
- Adjustable height up to 110cm (44 in)
- 60cm (24 in) reach with slide hanger for horizontal motion
- Arm pivots 180 degrees

KW-TOOL STAND	Tool Stand — 110cm height, 60cm reach, 2.3kg max load
KW-ARMKIT	Extra Arm Kit — Add another arm to the tool stand, 60cm reach, includes slider and hanging clip
KW-CLAMP	Bench Clamp — Fastens stand to edge of workbench without drilling

SPRING BALANCERS

- Suspends driver over work area for easy access
- Adjustable spring tension
- Travel distance of up to 1.8m

Specifications		
Model	**KL-600**	**KL-1200**
Weight Range	0.3–0.6kg / 0.7–1.3lbs	0.6–1.5kg / 1.3–3.3lbs
Travel Distance	1.8m	

Ph. 772.293.0071
sales@kilewswest.com

KILEWS®
KILEWS WEST USA

Screwdrivers assembled in USA
by Kilews West USA Inc

6945 LTC Parkway, Port St. Lucie, FL 34986

Ph. 772-293-0071
Fx. 772-465-4368

sales@kilewswest.com
www.kilewswest.com

Cat# KW0916