JL EZ WINDOW.NET

2DOOR ASSEMBLY MANUAL

LOT#:

Customer Service

If you have a question or concern

Email: service@neopmail.net

or call 203-591-9060

Monday-Friday 8:30am-4:30pm EST

PDF manual on www.EZTRUNK.com

DO NOT RETURN TO THE STORE!

Please read instructions fully before beginning assembly

NO	Illustration	Description	Part #	QTY.
1		Clamp_H	25643-2B* 25643-2R*	2
2	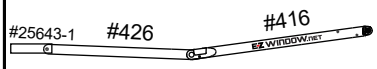	Support bar_Drive	53416B* 53416R*	1
3	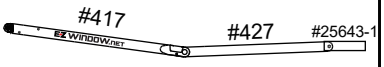	Support bar_Passenger	53417B* 53417R*	1
4	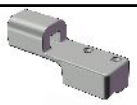	Plastic holder_Drive	189004	1
5		Plastic holder_Passenger	189003	1
6		Metal plate	15900	2
7		Bolt M5x30	55301	4
8		Self-drill screw s	4122	2
9	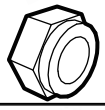	Lock Nut M6	10062	3**
10		Pin	25641	2
11		Velcro strip	251802	2
12		Round head screw	66041	3**
13	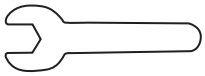	Wrench #10	#10	1
14		Corrugated Pin	24811	3**
15		Bungee w ith hook	5001	2

* Two different colors. B for black and R for red
** 1 extra piece

Customer Service:
service@neopmail.net or call 203-591-9060

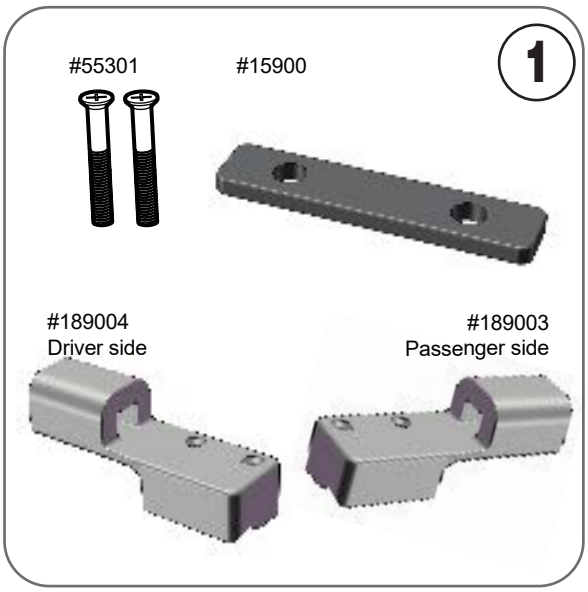

Repeat steps 1~4 for passenger side

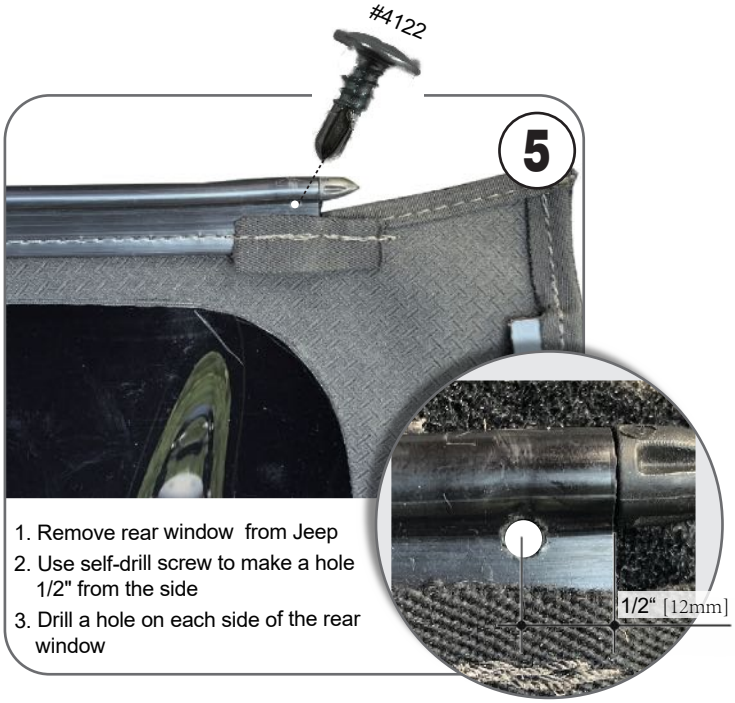

1. Remove rear window from Jeep
2. Use self-drill screw to make a hole 1/2" from the side
3. Drill a hole on each side of the rear window

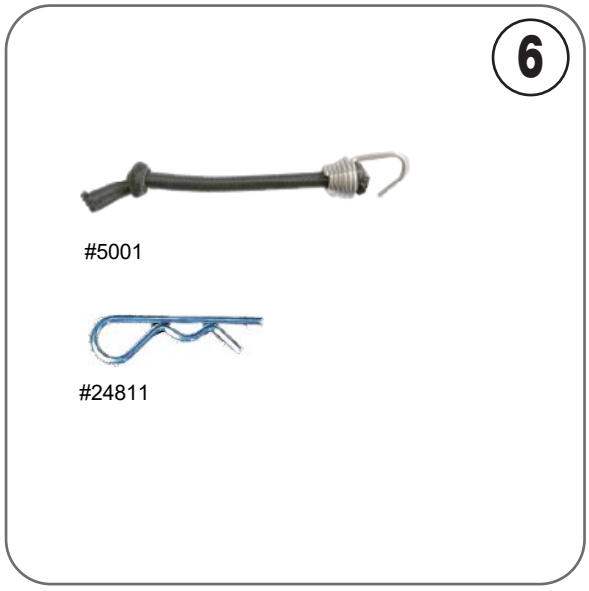

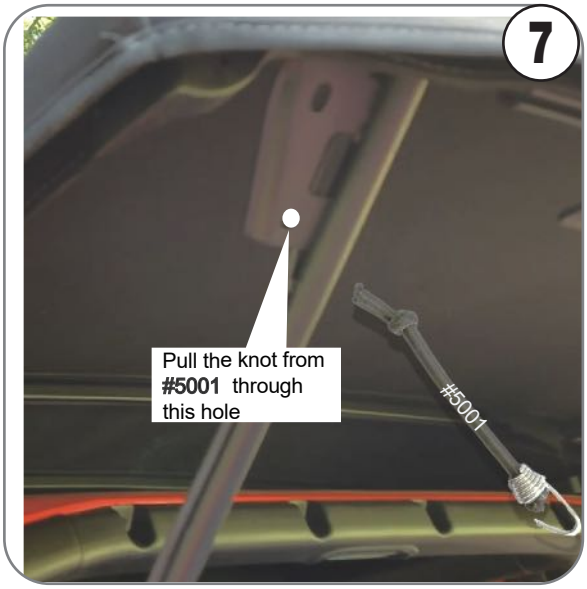

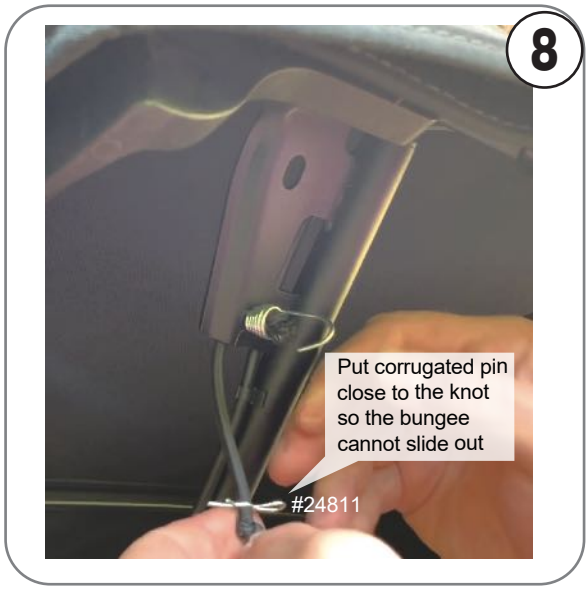

Driver side
#53416

11

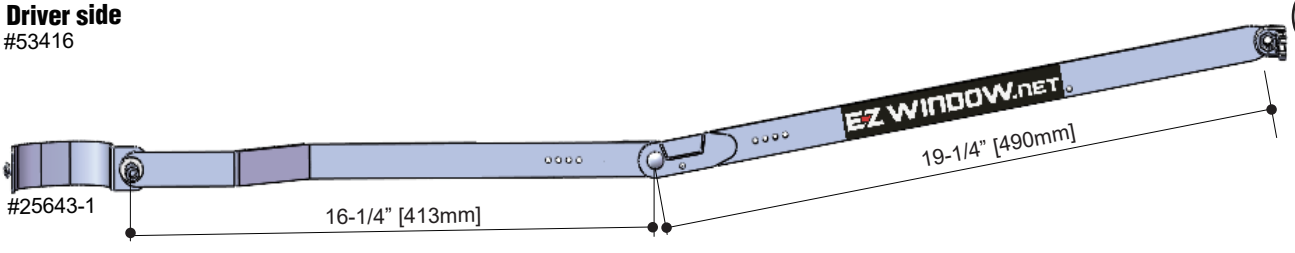

#25643-2

#10062

#25641

12

Driver side

13

14

Use the Screw **#66041** to bolt
#25653-2 to clamp **#25653-1**

15

1. Hand press clamp and tightening a lock nut to clamp.
2. Clamp high 2 inch.

Repeat step 13~15 for the other side

16

1. Install rear aluminium bar to soft windows.

17

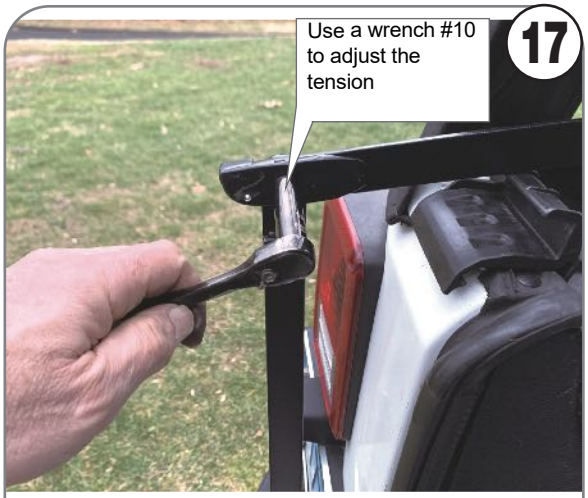

Driver side

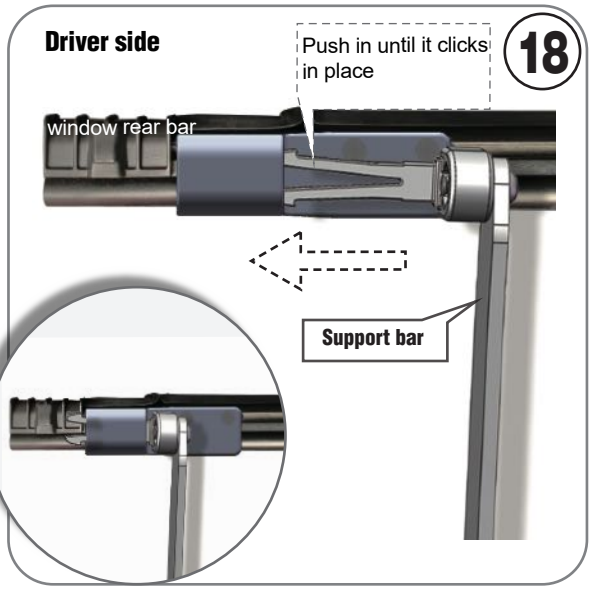

Passenger side

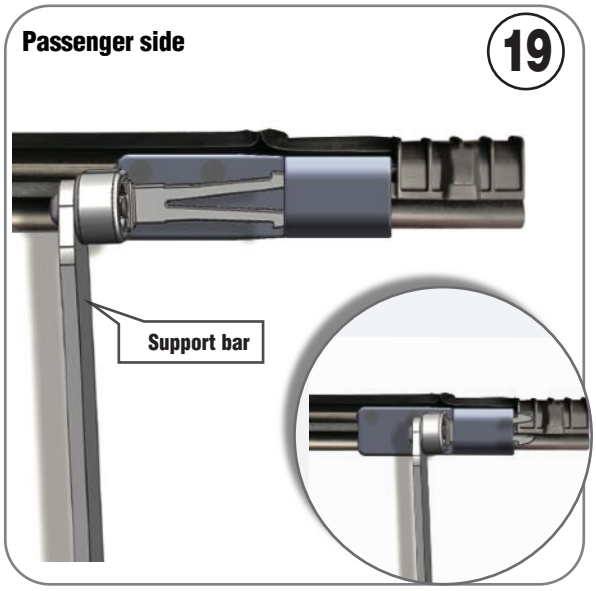

How to use EZWINDOW

With EZTRUNK version

1. Fold the side of the window with one hand
2. Pull the EZWINDOW with the other hand

Without EZTRUNK version

1. Open the back door
2. Pull up the rear window with both hands

Once inserted, secure the **pin** with the bungee

How to Storage EZWIDOW

23

1.Put velcro on both side of the roll bar
2. Velcro high 4 inch, Ensure support bar don not hit roll bar

24

25

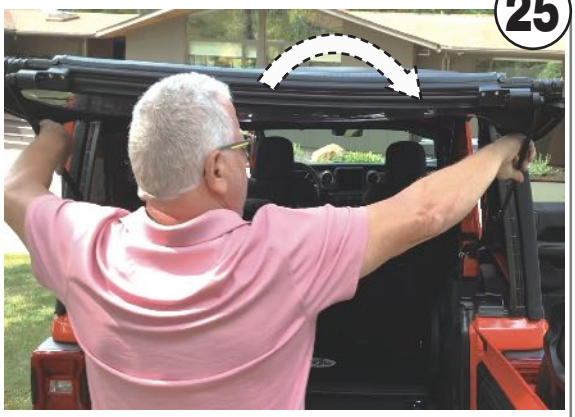

Fold the support bars to lower the window

26

Press the end and pull the Support bar out

27A

Use the velcro to secure the EZWINDOW

27B

Customer Service:
service@neopmail.net or call 203-591-9060

JL-19180044_ver. A
20192D

Customer Service

If you have a question or concern

Email: service@neopmail.net

or call 203-591-9060

Monday-Friday 8:30am-4:30pm EST

PDF manual on www.EZTRUNK.com

DO NOT RETURN TO THE STORE!