Cascadia®

SAM PIN LAYOUT

EPA 2010 Vehicles
SAM 6.0 Hardware

SAM CAB

GND to MGJB | BAT from PNDB

IGNITION CONTROLLED OUTPUTS

Cabin HVAC Controller, ACC – X1/10
Sleeper HVAC Controller, ACC – X1/15
VCU/CPC, IGN – X2/4
*Advertising Light, ACC – X3/4
*Body Builder Connector: IGN – X9/11
Tire Pressure Monitoring, IGN – X10/1
Mirror Adjust Switch, ACC – X10/2
Service Brake Pressure Switch, Supply – X10/7
Pwr Feed Sipr Thermostat Oil, IGN – X10/10
Radio, ACC – X10/18
*Rain/Light Sensor, BAT – X11/21
Rear Baggage Compartment Lights – X12/12
Ignition Switch - BAT – X13/7
Park Brake Switch Supply – X13/9
Low Air Pressure Switch Supply – X13/11
*Lane Guidance, IGN – X16/2
*Auxiliary Circulation Fan-Windshield, ACC – X16/5
*Air Intake Warmer/Grid Heater, IGN – X19/11
Air Filter Restriction Restriction Sensor, Supply – X19/13
HVAC Pressure Transducer, Supply – X19/17
Engine ECU, IGN – X19/18
Ether Start Power, IGN – X19/20
Temp Sensor Outside Air Gauge, IGN – X20/13
*Distance Sensor, IGN – X20/19

LOGIC CONTROLLED OUTPUTS

Hard Wired ISS, CAB – X2/10
Utility Light – X3/7
Door Open Status – X8/5
Door Sill Lamp Driver – X8/9
*Body Builder Connector, RPM – X9/1
*Body Builder Connector, Vehicle Speed – X9/2
Function Pin 1 – X9/3
*Body Builder Connector, Park Brake – X9/4
Function Pin 2 – X9/5
Function Pin 4 – X9/6
Function Pin 3 – X9/7
*Body Builder Connector, Backup Lamp – X9/8
*Body Builder Connector, Marker Lights – X9/10
*Body Builder Connector, Tail Lights – X9/12
*Body Builder Connector, Right Turn – X9/13
*Body Builder Connector, Left Turn – X9/14
*Body Builder Connector, Stop Lights – X9/15
Panel Lamps, PWM – X10/13
Wake Up Instrument Cluster – X10/17
*Diff Lock ICU Indicator, RA2 – X11/1
Washer Level, ICU Indicator – X11/2
Electrical Global Fault Indicator – X11/3
*Fuel Water Separator ICU Indicator – X11/4
Diff Lock ICU Indicator, RA1 – X11/5
Low Air Pressure ICU Indicator – X11/6
LVD ChimeLights "ON" Buzzer – X11/7
Engine Brakes-Retarder Enable, ICU Indicator – X11/8
High Beam ICU Indicator – X11/9
Turn Signal Left ICU Indicator – X11/11
Alternator Nd Charge ICU Indicator – X11/12
Turn Signal Right ICU Indicator – X11/13
Park Brake Switch ICU Indicator – X11/14
Footwell Lamp, Zone 2, PWM – X12/3
Reading Lamp 1, Zone 9, PWM – X12/6
Mid Dome Lamp, Zone 4A, PWM – X12/7
Sleeper Dome Lamp, Zone 4B, PWM – X12/9
Sleeper Footwell Lamp, Zone 10, PWM – X12/13
Turn Left Front Side – X12/15
Reading Lamp 2, Zone 5, PWM – X12/16
Sleeper Dome Lamp, Zone 4C, PWM – X12/17
Turn Right Front Side – X12/18
Clearance/ID Lamps Front II – X16/4
Clearance Lamps Front I – X16/8
Dome Lamp, Fwd Overhead Zone 1, PWM – X16/11
Dome Lamp, Fwd Overhead Zone 1, PWM – X16/14
Door Sill Lamp Passenger – X17/3
Low Beam, Left – X18/5
High Beam, Left – X18/6
Marker Lamps, Corner Front Right – X18/8
Turn Right Front Corner – X18/9
Marker Lamps, Front Left – X18/12
Marker Lamps, Front Left – X18/14
DRL (Daytime Running Lights), Right – X18/15
Marker Lamps, Corner Front Left – X18/16
High Beam, Right – X18/17
DRL (Daytime Running Lights), Left – X18/18
Turn Left Front Corner – X18/19
Low Beam, Right – X18/20
Horn (Electric), Comfort – X18/21
Starter Relay – X19/3
A/C Compressor Clutch – X19/6
*Activate PTO Solenoid – X19/5
Hood Tilt Switch Signal Supply – X19/14
Hood Tilt & Neutral & Park Brake Oil Supply – X19/16
*PTO Solenoid Activated – X19/21
Fog Lamp, Front Left – X20/8
*High Beam Auxiliary, Left – X20/10
Low Beam Auxiliary, Left – X20/11
*High Beam Auxiliary, Right – X20/12
Low Beam Auxiliary, Right – X20/14
Turn Right Front Side – X20/15
Fog Lamp, Front Right – X20/17
Washer Pump, Comfort – X20/20
*Horn Pneumatic, Comfort – X21/10
Turn Left Front Side – X21/11
Wiper Low – X21/12
Wiper High – X21/15
*Hands Free Phone, GND - X1/2
*Heated Seats, GND - X1/5
*Auxiliary Circulation Fan, Sleeper, GND - X1/8
Sleeper HVAC Controller, GND - X1/11
Cabin HVAC Controller, GND - X1/14
MSF, GND - X2/2
Area Lighting, Sleeper, GND - X2/5
Diagnostic Connector, GND1 - X2/8
Diagnostic Connector, GND2 - X2/11
*Collision Avoidance System, GND - X2/16
*Auxiliary, Coolant Heater, GND - X2/17
Spare Pin A, GND - X3/8
Auxiliary Cab Heater, GND - X3/13
*SRS Airbags, GND - X3/14
CGW, GND - X3/16
*Amplifier Power, GND - X3/17
Radio, GND - X3/19
*Antitheft Warning System, GND - X3/20
Utility Light, GND - X3/21
Power Feed Spare Output 1, GND - X4/3
*Power Feed Spare Output 3, GND - X4/4
Power Feed Spare Output 2, GND - X5/3
*Power Feed Spare Output 4, GND - X5/4
CB Radio, GND - X6/1
Instrument Cluster, GND - X6/4
Fleet Management System, GND - X6/7
Sleeper HVAC Fan Motor, GND - X7/1
Cabin HVAC Fan Motor, GND - X7/2
Mirror Heating, Driver, GND - X8/2
Door Control Driver, GND - X8/3
*Body Builder Connector: GND1 - X9/8
Panel Lamps, GND - X10/4
Tire Pressure Monitoring, GND - X10/5
Power Feed Sleeper Thermostat Oil - X10/8
Spare Pin P, GND - X10/11
Inside Air Temperature Sensor, GND - X10/14
*Rain/Light Sensor, GND - X11/10
Clutch Switches Return, GND - X11/16
*Auxiliary Telematic Unit, GND - X11/18
Dome Lamps, Sleeper, GND - X12/4
Reading Lamps 1&2, GND - X12/8
Footwell Lamp, GND - X12/10
Sleeper Dome Lamp, Zone 4B, GND - X12/11
Rear Baggage Compartment Lights, GND - X12/14
12V Power Receptacles 3&4, GND - X14/2
12V Power Receptacle 5&6, GND - X14/4
*Power Feed Spare Output 5&6, GND - X15/3
12V Power Receptacle 1&2, GND - X15/4
*Lane Guidance, GND - X16/3
*CD Player, GND - X16/6
Clearance Lamps Front I, GND - X16/9
Reading Lamps 3&4, GND - X16/12
Dome Lamps, Forward, GND - X16/15
Auxiliary Mirror Heating (Mirror On Hood), GND - X17/18
*Keyless Go/Keyless Entry, GND - X17/6
Heated Mirror, Passenger, GND - X17/8
Door Control Passenger, GND - X17/9
Marker Lamps, Front Left, GND - X18/1
Headlamp, Turn Lamp Corner, Right, GND - X18/2
Horn (Electric), GND - X18/3
Marker Lamps, Corner Front Right, GND - X18/4
Headlamp, Turn Lamp Corner, Left, GND - X18/7
Marker Lamps, Front Right, GND - X18/10
Marker Lamps, Corner Front Left, GND - X18/13
*Activate PTO Solenoid, GND - X19/1
Starter Relay, GND - X19/2
HVAC Pressure Transducer, GND - X19/12
Fog Lamp, Front Right, GND - X20/1
*Distance Sensor, GND - X20/2
Fog Lamp, Front Left, GND - X20/3
High/Low Beam Auxiliary, Right, GND - X20/4
High/Low Beam Auxiliary, Left, GND - X20/5
Washer Pump, GND - X20/7
Temp Sensor Outside Air, GND - X20/18
*Horn Pneumatic, GND - X21/1
Wiper, GND - X21/3
Spare, GND - X21/5
LVD Sense, GND - X21/6

GROUND RETURN PINS

INTERNAL SAM PC BOARD

F29 (3A)
BR21 (Note: BR) — F1 (30A): X4/1 – *Power Feed Spare Output 1, BAT; X4/2 – *Power Feed Spare Output 3, BAT
F6 (15A): X6/15 – 12V Power Receptacle 1 (Dash, Cigar), BAT
BR22 (Note: BR) — F3 (30A): X5/1 – Power Feed Spare Output 2, BAT; X5/2 – *Power Feed Spare Output 4, BAT
F15 (20A): X3/15 – 12V Power Receptacle 3 (Sleeper, Cigar), BAT
R3 N.O. — F19 (20A): X1/12 – *Heated Seats, IGN
BR23 (Note: BR) — F7 (15A): X6/9 – 12V Power Receptacle 2 (Dash, Phone), BAT
F14 (25A): X6/2 – Fleet Management System, BAT; X6/3 – CB Radio, BAT
F14 (25A): X6/2 – Alt; X6/3 – Alt
NOTE: Alternate fuse position for no LVD
F16A (3A): X2/18 – Auxiliary Cab Heater, Enable
R7 N.O. — F23 (15A): X6/5 – *GPS, IGN; X6/6 – *Power Feed Driver Information System, IGN; X6/6 – Fleet Management System, IGN; X6/8 – *Power Feed Gauge Pyrometer, IGN; X6/10 – Power Feed Gauge Axle Temp, IGN; X6/11 – Power Feed Gauge Engine Oil Temp, IGN
R8 N.O. — F24 (7.5A): X2/9 – Diagnostic Connector, IGN; X6/16 – Instrument Cluster, IGN
F25 (10A): X1/1 – *Transmission Temp Gauge & Shift Selector, IGN; X1/4 – *Hands free phone/Dash Splice, IGN; X2/14 – *Collision Avoidance System, IGN
R9 N.O. — F26 (5A): X3/6 – *SRS Airbag, IGN
F9 (20A): X3/9 – *Amplifier Power, ACC
R10 N.O. — F27 (10A): X8/8 – Mirror Heating, Driver
F28 (10A): X17/2 – Mirror Heating Passenger
F41 (10A): X16/10 – Auxiliary Mirror Heating (Hood Mtd)
BR24 (Note: BR) — F30 (20A): X14/2 – 12V Power Receptacle 6, BAT
F21 (15A): X2/15 – Area Lighting (Lwr Bunk & Slpr Wrk Srfc), BAT
F34 (3A): X16/17 – Baggage Compartment Light Switch supply, BAT
F35 (15A): X16/7 – Dome Lamp Cab, BAT
BR25 (Note: BR) — F31 (20A): X14/1 – 12V Power Receptacle 5, BAT
F17 (20A): X3/3 – 12V Power Receptacle 4 (Sleeper, Cigar), BAT
F36 (15A): X1/13 – *Auxiliary Circulation Fan, Sleeper, BAT; X16/13 – Reading Lamp, (Switched Locally) 4, BAT
R15 N.O. — F39 (15A): X17/1 – Power window Pass, ACC
F40 (15A): X8/7 – Power Window Driver, ACC

LOGIC CONTROLLED, RELAYED, FUSED OUTPUTS

FUSED PASSTHROUGHS

F2 (15A): X1/3 – Cabin HVAC Controller, BAT; X1/6 – Sleeper HVAC Controller, BAT; X1/9 – Transmission Shift Control Panel, BAT
F4 (15A): X2/12 – MSF, BAT
F5 (10A): X2/3 – OBD J1939, BAT; X2/6 – OBD DCDI, BAT
F8 (15A): X1/7 – *Hands Free Phone, BAT; X3/11 – Radio, BAT
F10 (30A): X7/4 – Cabin HVAC Fan Motor, BAT
F11 (30A): X7/3 – Sleeper HVAC Fan Motor, BAT
F12 (20A): X8/4 – Door Control Driver, BAT
F13 (20A): X2/13 – *Collision Avoidance System, BAT; X8/6 – Door Lock, BAT
F16B (20A): X2/18 – Auxiliary Coolant Heater, Bat; X2/5 – Auxiliary Cab Heater, Bat; X13/1 – Auxiliary Coolant Heater, Enable
F18 (15A): X3/1 – *GPS, BAT; X3/2 – *Antitheft Warning System, BAT; X10/16 – *Tire Pressure Monitoring, BAT; X11/19 – *Auxiliary Telematic Unit, BAT
F20 (2A): X3/18 – CGW, BAT
F22 (15A): X6/18 – Instrument Cluster, Horn Switch Supply, BAT
F32 (25A): X15/1 – *Power Feed Spare Output 5, BAT; X15/2 – *Power Feed Spare Output 6, BAT
F33 (20A): X16/16 – Spot Light, BAT
F37 (15A): X6/12 – Power Feed Clock Cab, BAT; X6/13 – *Power Feed Driver Information System, BAT; X6/14 – Power Feed Clock Sleeper, BAT; X16/1 – *CD Player, BAT; X17/7 – *Keyless Go/Keyless Entry, BAT
F38 (20A): X17/4 – Door Control Passenger, BAT

SAM CAB INPUTS

X2/7 – PTO, Hardwired Interlock
X8/1 – Door Open Switch, Driver Side Return
X10/3 – Belt Buckle Contact Signal
X10/6 – Vehicle Power Shut Down Signal – OI
X10/9 – Inside Temperature Sensor, Feedback
X10/12 – A/C Compressor Clutch Request
X10/15 – *Belt Buckle Contacts GND
X11/15 – *Rain/Light Sensor, LIN
X11/17 – Top of Clutch, Cruise Control Disable
X11/20 – Bottom of Clutch, Starter Control
X12/1 – Rear Baggage Comp Light Switch Center
X12/2 – Rear Baggage Comp Light Switch Left
X12/5 – Rear Baggage Comp Light Switch Right
X13/2 – SAM Cab CAN_L, CABIN
X13/3 – SAM Cab CAN_H, CABIN
X13/4 – *Ignition Switch - OFF
X13/5 – Ignition Switch - ACC
X13/6 – Ignition Switch - ON (Ignition)
X13/8 – *Park Brake Switch Return
X13/10 – Low Air Pressure Switch Return
X13/12 – Service Brake Pressure Switch Return
X13/13 – Horn Switch UC Bypass
X13/14 – *Start Enable - Crank Interlock
X13/15 – Ignition Switch – CRANK
X17/5 – Door Open Passenger Side, Return
X18/11 – Hood Tilt Switch Signal Return
X19/10 – HVAC Pressure Transducer, Feedback
X19/15 – Air Filter Restriction Restriction Sensor, Return
X19/19 – *PTO Response (Feedback)
X20/16 – Temp Sensor Outside Air, Feedback
X20/21 – Washer Fluid Lever, Feedback
X21/8 – Alternator Charging
X21/9 – Wiper Parked
X21/13 – LVD Sense, Bat/Emergency Supply

SAM CAB KEY:
X(connector)/(cavity) – Pin description
* indicates Highline only function

NOTE BR: Bistable relays magnetically latch in either the open or closed state with a pulse from the SAM as battery charge levels are reached. SAM will check the state of the relay on ignition transition. The ignition switch should be cycled after replacing a bistable relay.

Fuse Legend
- 2A
- 3A
- 5A
- 7.5A
- 10A
- 15A
- 20A
- 25A
- 30A

SAM CHASSIS

GND to MGJB | BAT from PNDB

FUSED PASS-THROUGHS

*Power Feed EAPU (Air Processing Unit), BAT - X57/13
Power Feed 1 ABS/BS, BAT - X52/7
Power Feed 2 ABS/BS, BAT - X52/4

IGNITION CONTROLLED OUTPUTS

Emergency BAT, Chas - X51/5
Air Dryer (Pneumatic, Electrically Heated), ACC - X57/4
IGN Supply, Not Connected - X58/2

LOGIC CONTROLLED OUTPUTS

Hard Wired ISS, Chas - X51/3
Marker Lamp, Side Right - X52/1
Marker Lamp, Corner Rear Right - X52/3
Marker Lamp, Side Left - X53/1
Marker Lamp, Corner Rear Left - X53/2
*End of Frame Primary Trailer Power - X56/3
*End of Frame Primary Trailer Turn Lamps Right - X56/7
*Diff Lock Feedback Switch Supply, FA2 - X56/8
End of Frame Supplemental Trailer Power/Backup - X56/9
*End of Frame Primary Trailer Turn Lamps Left - X56/10
*Diff Lock Feedback Switch Supply, FA1 - X56/11
*Diff Lock Solenoid Driver, FA1 and FA2 - X56/12
*End of Frame Primary Trailer Tail Lamps - X56/13
*End of Frame Primary Trailer Stop Lamps - X56/14
*End of Frame Primary Trailer Marker Lamps - X56/15
Turn Right Rear, Lower - X58/1
Tail Lamp, Right - X58/3
Turn Left, Rear, Lower - X58/10
License Plate Lamp (First) - X58/12
Marker Lamp, Side Right - X58/13
Marker Lamp, Side Left - X58/16
Tail Lamp, Left - X58/18
Backup Lamp 1 - X58/19
Stop Lamp, Rear Right Lower - X58/20
Stop Lamp, Rear Left Lower - X58/21
Backup Switch, Supply - X59/1
Transmission Neutral Switch, Supply - X59/2
Diff Lock Solenoid Driver, RA1 and RA2 - X59/11
Diff Lock Feedback Switch Supply, RA1 - X59/19
*Diff Lock Feedback Switch Supply, RA2 - X59/20

GROUND RETURN PINS

Marker Lamp, Side Right, GND - X52/2
Marker Lamp, Corner Rear Right, GND - X52/5
Power Feed 1 ABS/BS, GND - X52/8
Power Feed 2 ABS/BS, GND - X52/9
Marker Lamps, Corner Rear Left, GND - X53/4
Rear View Camera, GND - X53/6
Marker Lamps, Side Left, GND - X53/8
Trailer ABS Connector (7), GND1 - X54/3
*Trailer, GND2 - X56/1
*Power Feed EAPU (Air Processing Unit), GND - X57/2
Air Dryer (Pneumatic, Electrically Heated), GND - X57/3
Fuel Water Separator Heater Element, GND - X57/5
Marker Lamps, Side Left, GND - X58/4
Tail Lamp, Right, GND - X58/5
Tail Lamps, Left, GND - X58/8
Marker Lamp, Side Right, GND - X58/14
Fuel Level Sensor, GND - X58/15
Temp Sensor Rear Axle 2, GND - X59/14
Temp Sensor Rear Axle 1, GND - X59/17

INTERNAL SAM PC BOARD

F1 (20A)
F3 (20A)
F4 (10A)
F10 (5A)
R1 N.O. (Note: R1) — F2 (20A): X57/15 - Fuel Water Separator Heater Element, IGN
R2 N.O. — F5 (20A): X53/9 - Trailer Turn Lamp Left
R3 N.O. (Note: R3) — F6 (15A): X52/6 - Power Feed ABS/BS, IGN; F7 (10A): X53/3 - *Rear View Camera, IGN; X57/1 - *Power Feed EAPU/WIF Module, IGN
R4 N.O. — F8 (20A): X53/7 - Trailer Turn Lamp Right
R5 N.O. — F9 (30A): X55/2 - Trailer Marker Lamps
R6 N.O. — F11 (30A): X54/1 - Trailer ABS Connector (7), IGN
R7 N.O. — F12 (30A): X55/4 - Trailer Stop Lamps
R8 N.O. (Note: R8) — F14 (30A): X55/1 - Trailer Power, BAT or IGN
R9 N.O. (Note: R9) — F13 (20A): X55/3 - Trailer Tail Lamps

LOGIC CONTROLLED RELAYED, FUSED OUTPUTS

SAM CHAS INPUTS

X51/1 - SAM_Chas CAN_L - Cabin
X51/2 - SAM_Chas CAN_H - Cabin
X51/3 - Hard wired ISS, Chas
X53/5 - Trailer ABS Connector (7), ABS Detection
X56/4 - Diff Lock Solenoid Return, FA1 and FA2
X56/5 - Diff Lock Feedback Switch Return, FA1
X56/6 - Diff Lock Feedback Switch Return, FA2
X58/7 - Fuel Level Sensor, Feedback
X59/3 - Backup Switch, Return
X59/9 - Fuel Water Separator Sensor, Feedback
X59/10 - Temperature Sensor Rear Axle 1, Feedback
X59/13 - Temperature Sensor Rear Axle 2, Feedback
X59/15 - Diff Lock Feedback Switch Return, RA1
X59/16 - Diff Lock Solenoid Return, RA1 and RA2
X59/18 - Transmission Neutral Switch, Return
X59/21 - Diff Lock Feedback Switch Return, RA2

SAM CHASSIS KEY:
X(connector)/(cavity) – Pin description
* indicates Midline or Highline function
* indicates Highline only function

NOTE R1:
This relay has +12v at pin 86 and is grounded to the SAM CHAS at pin 85. All other relays except for SAM CHAS R3 are powered through pin 85 and grounded at pin 86.

NOTE R3:
This relay has +12v at pin 86 and is grounded to the SAM CHAS at pin 85. All other relays except for SAM CHAS R1 are powered through pin 85 and grounded at pin 86.

NOTE: R8
R8 is a single throw relay, it will only have 4 prongs. Either pin 87 or pin 87a will be missing, depending on the intended functionality of the circuit.
If prong 87a is missing the circuit will be normally open, the trailer power circuit is enabled only if the key is in IGN position or enabled through a switch (depending on SAM parameterization)
If prong 87 is missing, the circuit is normally closed (BAT).
If a 5 prong relay is used, the trailer power will be always on.

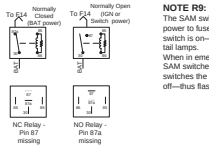

NOTE R9:
The SAM switches relay 9 on supplying power to fuse 13 when the headlight switch is on—thus turning on the trailer tail lamps.
When in emergency power mode, the SAM switches relay 9 on and off, which switches the power to fuse 13 on and off—thus flashing the trailer tail lamps.

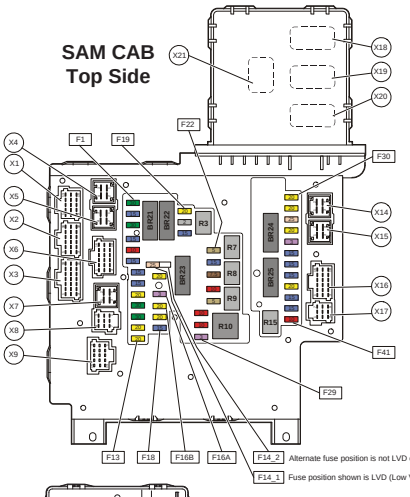

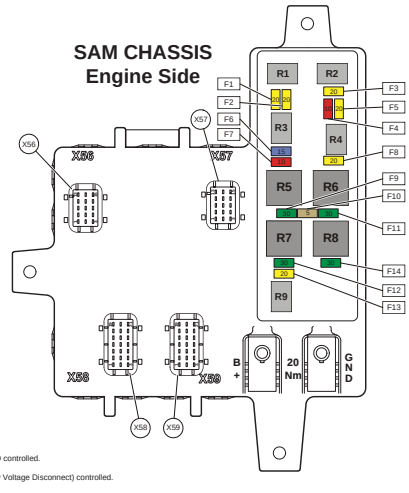

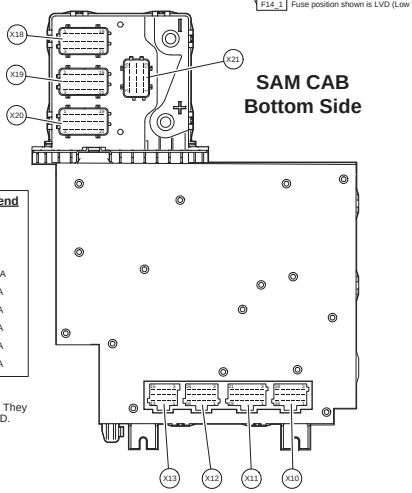

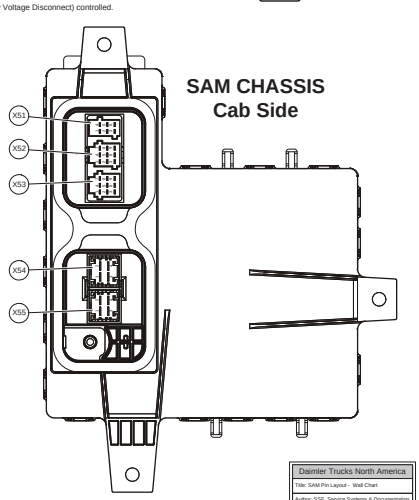

- **Ignition Controlled Pins** – Turned on by FETs depending on ignition switch status, with three types, BAT, ACC, or IGN
- **Logic Controlled Outputs** – Turned on and off by FETs depending on SAM inputs (from CAN and other input pins), interlocks and parameter settings. They are unfused, but will turn off in the case of an over current. Not all are powered pins, some pins are turned on and off to a ground, and are noted by GND.
- **Ground Return Pins** – Dedicated ground pins connected internally to the SAM GND.
- **Logic Controlled, Relayed, Fused Outputs** – Fused and controlled by a relay depending on either ignition switch status or by inputs to the SAM. The control side of all the relays are fused through one fuse on each SAM.
- **Fused Passthoughs** – Constant BAT power through a fuse
- **SAM Inputs** – All the inputs, either CAN inputs or sensor feedback. Many of these inputs are chopped signals.
- **Logic Controlled, Fused Output** – Turned on and off by FETs depending on SAM inputs. Same as logic controlled outputs but fuse protected.
- **SAM 6.0 Hardware** – Start of production August 2, 2010.

Daimler Trucks North America
Title: SAM Pin Layout - Wall Chart
Author: SSE, Service Systems & Documentation
Original Date: Sept. 9, 2007
Last Update: May 4, 2011

Daimler Trucks North America LLC, 4747 N. Channel Ave, Portland, OR, www.daimlertrucksnorthamerica.com
Copyright 2008-2011, Daimler Trucks North America LLC. All rights reserved. Daimler Trucks North America LLC is a Daimler AG company.