INSTALLATION AND OWNER'S MANUAL

MODEL WMG
Watertight Gearhead Operator

UL 325 and UL 991 Listed

Serial #:	
Date Installed:	
Your Dealer:	

READ THIS MANUAL CAREFULLY BEFORE INSTALLATION OR USE. SAVE THESE INSTRUCTIONS.

As of date of manufacture, meets all ANSI/UL 325 Safety Requirements for Vehicular door operators.

Table of Contents
Model WMG - Watertight Gear Reduced Hoist Operator

Product Features 3

Preparation 4

Component Identification Pictorial & Listing 5

Important Installation Notes (Things to do Before & During Installation) 6

Door Types & Mounting Positions 7

Installation Instructions 8-13

Chain Hoist Installation 10

Setting the Limits 11

Electrical Wiring Instructions 12

Testing 14

Important Safety Instructions for Owner 15

Wiring Terms 15

Maintenance 16

Trouble Shooting Chart 17

Warranty Information 19

READ THESE STATEMENTS CAREFULLY AND FOLLOW THE INSTRUCTIONS CLOSELY

The Warning and Caution boxes throughout this manual are there to protect you and your equipment. Pay close attention to these boxes as you follow the manual.

WARNING	CAUTION	WARNING	CAUTION
Indicates a MECHANICAL hazard of injury or death. Gives instructions to avoid the hazard.	Indicates a MECHANICAL hazard of damage to your operator or equipment. Gives instructions to avoid the hazard.	Indicates an ELECTRICAL hazard of injury or death. Gives instructions to avoid the hazard.	Indicates an ELECTRICAL hazard of damage to your operator or equipment. Gives instructions to avoid the hazard.

PRODUCT FEATURES

The purpose of this booklet is to provide assembly, installation, and operation information concerning PowerMaster Model WMG Commercial Vehicular Garage Door Operators and related Accessory Products.

NOTE: IT IS IMPORTANT THAT THIS INSTRUCTION MANUAL BE READ AND UNDERSTOOD COMPLETELY BEFORE INSTALLATION OR OPERATION IS ATTEMPTED. IT IS INTENDED THAT THE INSTALLATION OF THIS UNIT WILL BE DONE ONLY BY PERSONS TRAINED AND QUALIFIED IN THE INSTALLATION, ADJUSTMENT, AND SERVICE OF COMMERCIAL OVERHEAD DOORS AND DOOR OPERATORS, AND BY QUALIFIED ELECTRICIANS.

The important safeguards and instructions in this manual cannot cover all possible conditions and situations which may occur during its use. It must be understood that common sense and caution be exercised by the person(s) installing, maintaining, and operating the equipment described herein.

Do not use this equipment for any purpose other than its intended use: the operation of an overhead commercial vehicular garage door.

STANDARD FEATURES

Limit Switches: Rotary limit switches, easily adjusted over a wide range. The motor may be removed without affecting the limit switch adjustments.

Manual Release: Permits manual operation of the door in the event of a power failure. The Model WMG operator is equipped with a chain hoist to aid in manual operation. Use of this feature will not affect the limit settings.

Control circuit: 24 Volts AC. Standard 3-button open, close, and stop supplied. Will accept all standard control devices.

Connections for Auxiliary Entrapment Protection Devices: Use with reversing door edge components or a photo-electric beam device across the opening.

Momentary Contact to Close: Feature can be activated by simply moving a wire on the terminal strip.

Constant Pressure to Close: Standard Operation

MODEL WMG OPERATOR APPLICATIONS

WMG operators are intended for commercial and industrial use to raise or lower rolling steel or sectional overhead doors by chain coupling to the door shaft. WMG operators are suitable where all or part of the door remains in a vertical position when fully open, such as doors with at least 18 inches of lift clearance or full vertical lift doors. WMG operators may also be used with roll-up service doors and grilles when specified on order from factory.

A WMG operator DOES NOT LOCK THE DOOR IN ITS CLOSED POSITION. However, because the cross-header shaft is prevented from turning by the operator, the torsion springs provide no assistance in lifting the door should an attempt be made to raise it manually.

WMG operators are used in the following applications:

- Continuous Duty, Medium and Heavy Duty Cycle Commercial installations
- Indoor use only
- Doors with a maximum area of 840 square feet (3HP). Maximum area slightly higher for lighter doors (Consult factory).

OPTIONAL FEATURES

Digital Radio Controls: Open, Close and Stop operation. Radio units are available to control multiple doors.

Digital Timer to Close: Adjustable from 0 to 17 minutes in one second intervals.

Keyless Entry System: Connection terminals provided for hard wired keyless entry systems. Optional radio receiver will allow operation of a wireless, keyless system.

PREPARATION

WARNING

ELECTRIC DOOR OPERATORS ARE DESIGNED FOR DOORS IN GOOD WORKING CONDITION: PROPERLY OPERATING, PROPERLY COUNTERBALANCED, AND PROPERLY ADJUSTED IN ACCORDANCE WITH THE DOOR MANUFACTURER'S INSTALLATION INSTRUCTIONS.

Before starting the installation of the operator, the door must be in good working condition, properly operating, and be properly counterbalanced. Inspect the door and door guides for loose or missing hardware. Test the door manually for balance and ease of operation. Lubricate door hinges and rollers. If necessary, employ a qualified technician to adjust the springs for proper counterbalance of the door.

Stops should be installed at the top end of each track to prevent the possibility of door rollers moving beyond the ends of the track. If the cross header shaft is made from hollow tubing rather than solid rod, it is recommended that it be plugged with a short length of solid bar for more secure installation of the shaft sprocket or flange coupler.

WARNING

ROPE OFF THE AREA TO KEEP PERSONNEL AND VEHICLES CLEAR OF THE DOOR AND FLOOR SPACE IN THE VICINITY OF THE OPERATOR DURING THE INSTALLATION.

WARNING

SPRINGS ARE SUBJECT TO VERY HIGH FORCES AT ALL TIMES. ADJUSTMENTS ARE TO BE MADE BY A QUALIFIED PROFESSIONAL DOOR INSTALLER ONLY.

WARNING

REMOVE OR DISABLE ANY LOCKING DEVICES FROM DOOR. REMOVE ALL ROPES.

Before removing the operator powerhead from the shipping carton, inspect the nameplate on the cover of the operator control box to verify that it is the correct model for the intended application, and that the voltage and phase are in accordance with electrical power provided at the job site.

COMPONENT IDENTIFICATION

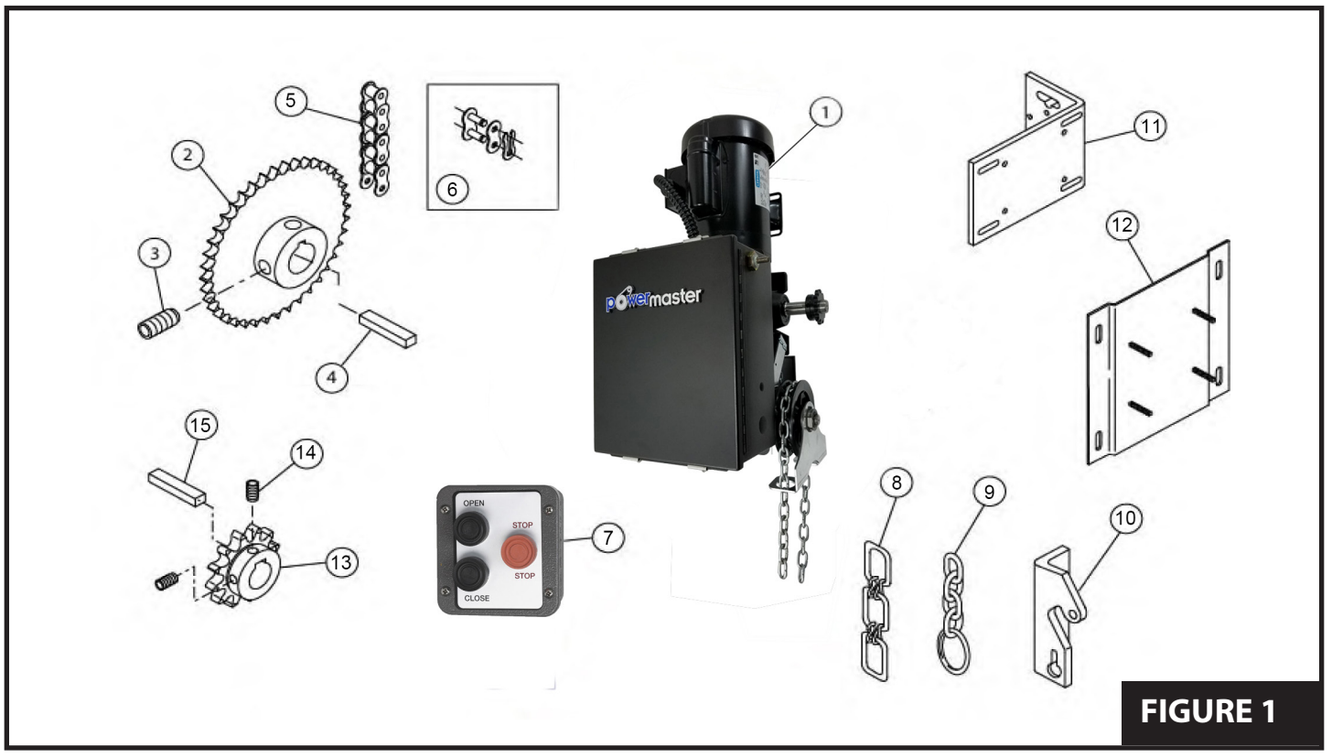

FIGURE 1

COMPONENT IDENTIFICATION LISTING

Item#	Description	Quantity
1	Operator Powerhead	1
2	Driven Sprocket on Door Shaft	1
3	Set Screw, 5/16-18 x 1	2
4	Steel Square Key	1
5	Drive Chain	1
6	Master Link	1
7	3-Button Station	1
8	Hand Chain, Pre-cut	1
9	Sash Chain, Pre-cut	1
10	Chain Lock Bracket	1
11	Mounting Bracket (optional)	
12	Wall Mtg Plate (optional)	
13	Drive Sprocket	1
14	Set Screw, 5/16-18 x 5/16	2
15	Key, 1/4 x 1/4 x 1	1

IMPORTANT INSTALLATION NOTES

WARNING	**TO REDUCE THE RISK OF SEVERE INJURY OR DEATH, READ & FOLLOW ALL INSTALLATION INSTRUCTIONS!**

- Install only on a properly operating, properly balance garage door. An improperly operating or improperly balanced door could cause severe injury. Have a qualified service person make repairs to cables, spring assemblies, and other items before attempting to install the door operator.
- Remove all ropes and remove or disable all locks (unless mechanically and/or electrically interlocked to the power unit) that are connected to the garage door before installing the operator.
- Lightweight doors (such as fiberglass, aluminum, etc) must be reinforced to avoid door damage. Check the door manufacturer's instruction manual for a bracing procedure, or for a reinforcement kit.
- The MG Series Operator is a commercial vehicular door operator, and as such, is not intended for pedestrian traffic. Where applications occur in areas known to have pedestrian traffic, a pedestrian door MUST be available to enter/exit the building. You must also install an AUXILIARY ENTRAPMENT PROTECTION device that is UL recognized and has been tested for use with this unit (such as a photoelectric beam device and/or reversing sensing door edge) as part of the complete system.
- The connection of an auxiliary entrapment protection device is REQUIRED on all applications when the 3-button station is out of sight of the door, or when any other automatic or manual control is used.
- Install the operator **AT LEAST 8 feet** above the floor.
- Do not connect the operator to the power source until instructed to do so.
- Mount the control station as follows:
    - Within sight of the door;
    - At a minimum height of 5 feet above the floor so small children cannot reach it; ***and***
    - Away from the door, so the user is prevented from coming in contact with the door while operating the controls.
- Do not over tighten clutch adjustment to compensate for a poorly working door.
- Securely attach entrapment warning placard adjacent to the control station in a prominent location.
- After installing the operator, test all safety features for proper operation (See ***TESTING*** section)

DOOR TYPES AND MOUNTING POSITIONS

1. Vertical Front of Coil, Right Hand
2. Horizontal Top of Coil, Right Hand
3. Vertical Wall Mount, Right Hand
4. Horizontal Side of Coil, Right Hand
5. Horizontal Front of Coil, Right Hand
6. Vertical Front of Coil, Left Hand
7. Horizontal Top of Coil, Left Hand
8. Vertical Wall Mount, Left Hand
9. Horizontal Side of Coil, Left Hand
10. Horizontal Front of Coil, Left Hand

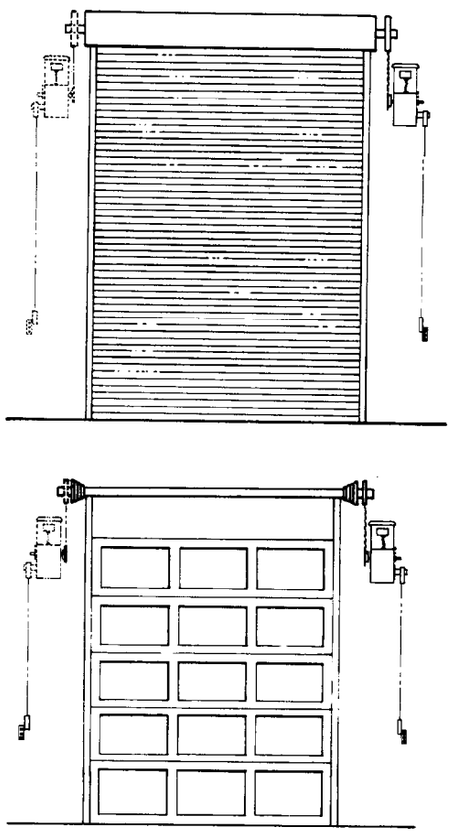

FIGURE 2

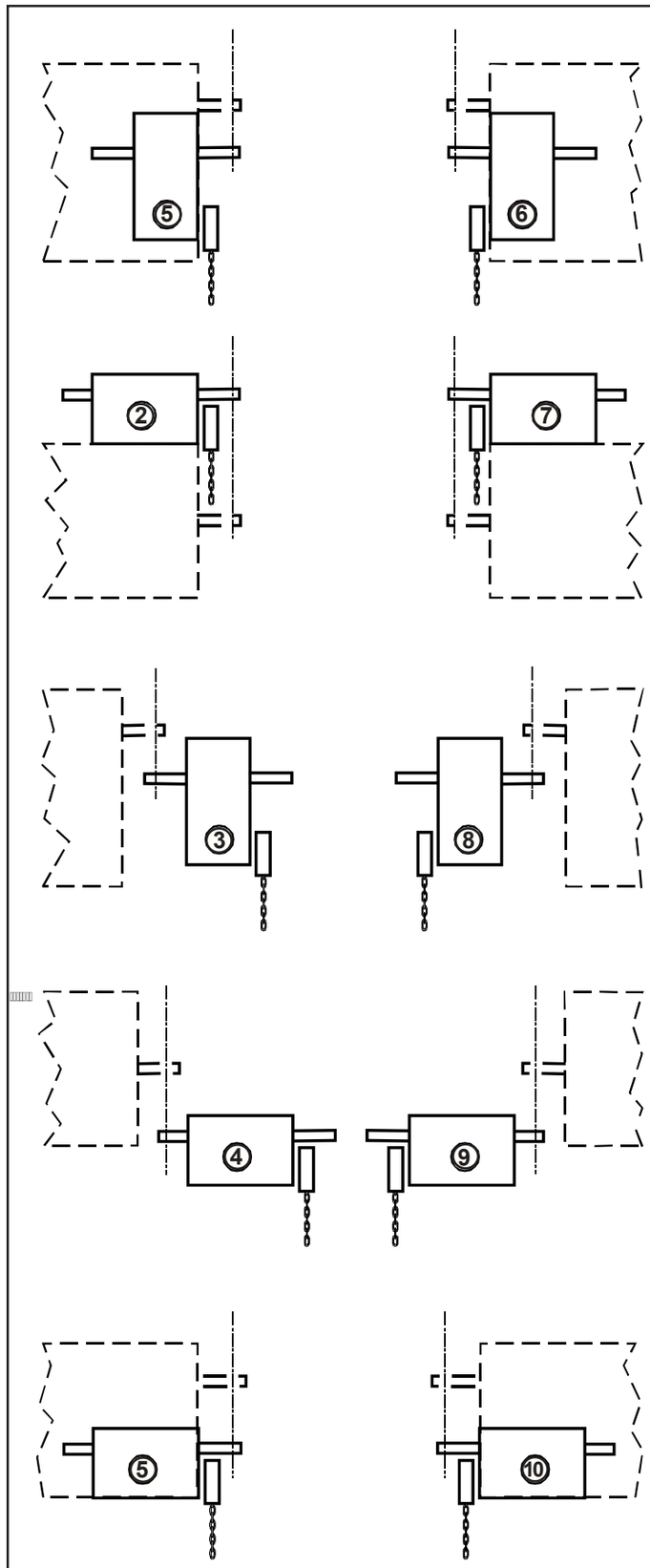

FIGURE 3

WARNING

SPRINGS, PULLEYS, CABLES AND MOUNTING HARDWARE USED TO BALANCE YOUR GARAGE DOOR ARE UNDER EXTREME TENSION AT ALL TIMES AND CAN CAUSE SEVERE INJURY OR DEATH IF DISTURBED. DO NOT ATTEMPT ADJUSTMENT.

MOUNTING THE OPERATOR:

WHEN PREPARING THE MOUNTING SURFACE, ENSURE THE OPERATOR WILL BE RIGID AND SECURE WHEN INSTALLED, THE MOUNTING SURFACE WILL PROVIDE A LEVEL BASE, AND THE OPERATOR'S DRIVE SHAFT WILL BE PARALLEL WITH THE DOOR SHAFT. FAILURE TO MEET THESE CONDITIONS WILL RESULT IN AN OVERALL UNSAFE DOOR OPERATION AND PREMATURE FAILURE OF THE DOOR AND DOOR OPERATOR.

1. **Figures 2 and 3** illustrates several positions suitable for mounting the operator: Right Hand or Left Hand Wall Mount or Horizontal (shelf) Mount to the torsion shaft. For sectional doors, the MG operator must be wall mounted. For rolling steel doors, the operator must be wall mounted or hood mounted by using an optional hood mounting bracket [**Item 11**]. A wall mounting plate [**Item 12**] is also available from the factory (see **Figure 1)**. The mounting plate/bracket provides for chain tension adjustment as well as aiding installation.

   NOTE: THE OPERATOR DRIVE SPROCKET MAY BE INSTALLED ON EITHER SIDE OF THE GEAR REDUCER. SELECTION DEPENDS ON WHICH SIDE OF THE DOOR THE OPERATOR IS MOUNTED ON.

2. Determine which side of the door the operator will be located on. Fasten sprockets [**Item 2**] and [**Item 13**] and the keys [**Items 4 and 15**] on the chosen side of the torsion shaft of the door and on the corresponding end of the output shaft of the operator. Tighten the set screws enough to prevent the sprockets from sliding off the shaft. If the door shaft lacks a keyway, you will need to drill and pin the sprocket in accordance with **Step 6** (Tightening the set screws is sufficient for this step). The sprockets should be kept as close as possible to the bearings. Fasten the wall mounting plate or the mounting bracket (as applicable and if available) to the operator gear box flange. Temporarily suspend the operator in its mounting position so that the distance between the door shaft and the operator's output shaft is between 12" and 15" (See **Figure 5** for wall mount and **Figure 6** for bracket plate mount illustration). The distance between the shafts may be greater if the mounting conditions prohibit installation as suggested.

3. Connect the two drive sprockets [**Item 2 and Item 13**] with the drive chain [**Item 5**] and connecting link [**Item 6**], shortening the chain to the proper length if necessary. To shorten the chain, use a chain break tool or drive out the appropriate rivets with a punch.

4. With the chain tight and straight and the operator's output shaft parallel with the door's torsion shaft, trace the mounting slots (holes) on the mounting surface, then lower the operator to the floor. The MG operator gear box mounting hole pattern is shown in **Figure 4**.

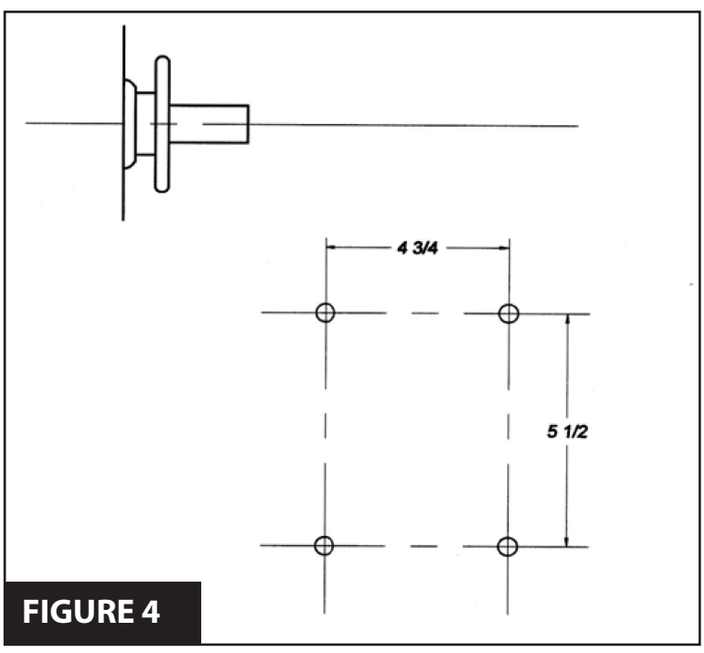

FIGURE 4

5. The operator should be installed using 3/8″ bolts through the wall. If the building's construction will not allow the usage of through bolts, then use lag bolts and shields (or the equivalent type of fasteners). Mount the operator, slipping the drive chain on before bolting the operator to the mounting surface, but do not completely tighten the bolts at this time.

6. Re-align the door shaft and operator drive shaft sprockets and connecting drive chain. Secure the sprockets in place with their set screws. If no keyway exists in the door shaft, drill a 3/8″ diameter hole through the door sprocket and door shaft with the sprocket in its aligned position. Insert a 3/8″ diameter hole through the door sprocket and door shaft with the sprocket in its aligned position. Insert a 3/8″ diameter bolt (not provided) through the sprocket hub and shaft. Secure with a lock washer and hex nut. See **Figure 7**.

7. Adjust the drive chain tension such that there is no more than 1/4″ slack when the chain is depressed between the sprockets (See **Figure 8)**. The preferred mounting is with the motor end up and the operator below the door shaft. This results in better clearance for the hand chain and disconnect chain.

FIGURE 5

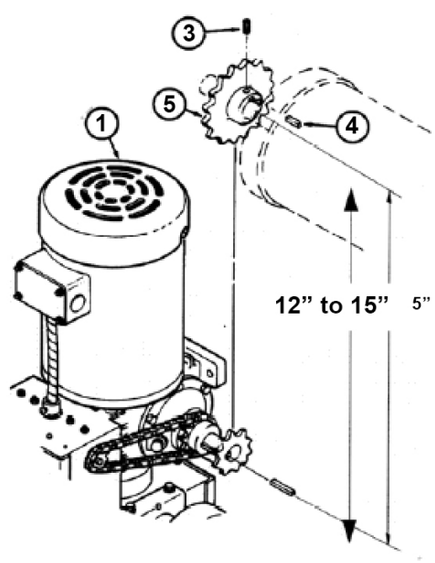

FIGURE 6

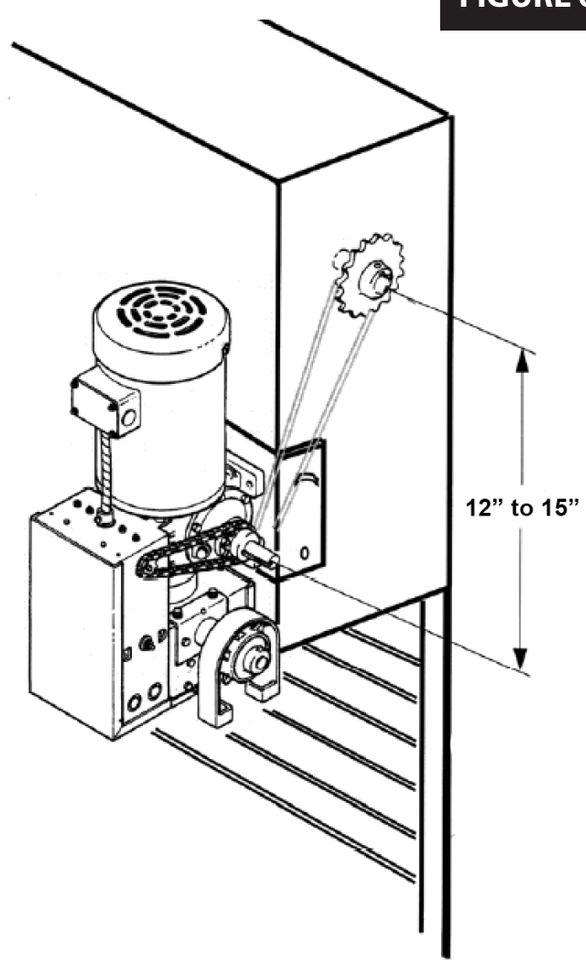

FIGURE 7

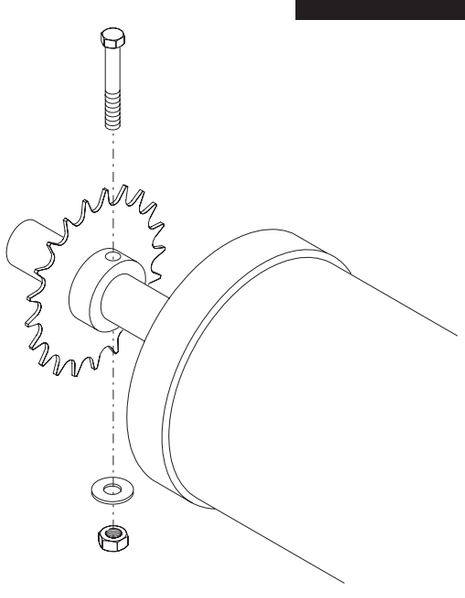

CHAIN HOIST INSTALLATION

1. Refer to **Figure 10** to install the chain hoist. Pass the hand chain [**Item 8**] over the chain pocket wheel and through the guide holes in the chain guard. Fasten the ends of the chain together (to make one continuous loop) by opening and re-closing one link using two pairs of pliers. If the chain is too long, shorten it to the desired length by removing links.
2. Remove the sash chain from the shipping bag and let hang from the disconnect lever. Pull the sash chain to engage the hand chain. This will actuate the interlock switch and disengage the solenoid brake.
3. Use lag screws to attach the chain lock bracket [**Item 10**] to the wall, vertically in line with the sash chain about four feet off the floor. See **Figure 11**.

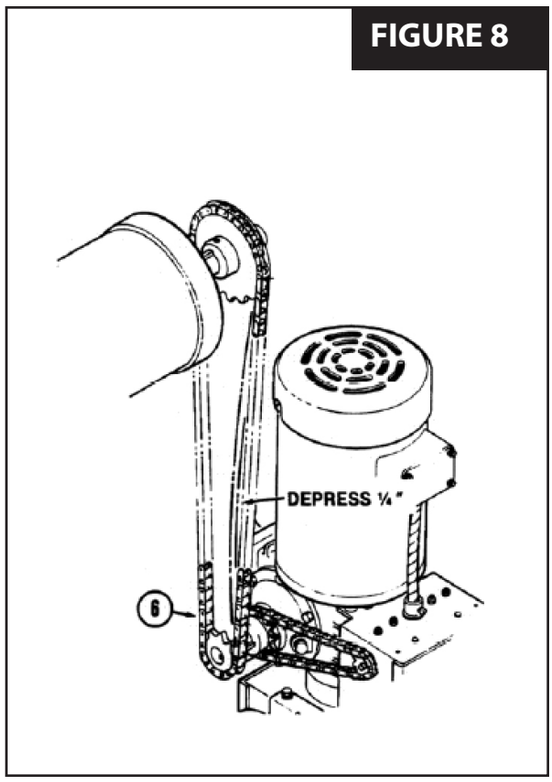

FIGURE 8

BEFORE PROCEEDING WITH THE OPERATOR INSTALLATION AND SETTINGS, MAKE A FINAL CHECK FOR TIGHTNESS OF ALL MOUNTING HARDWARE AND SET SCREWS.

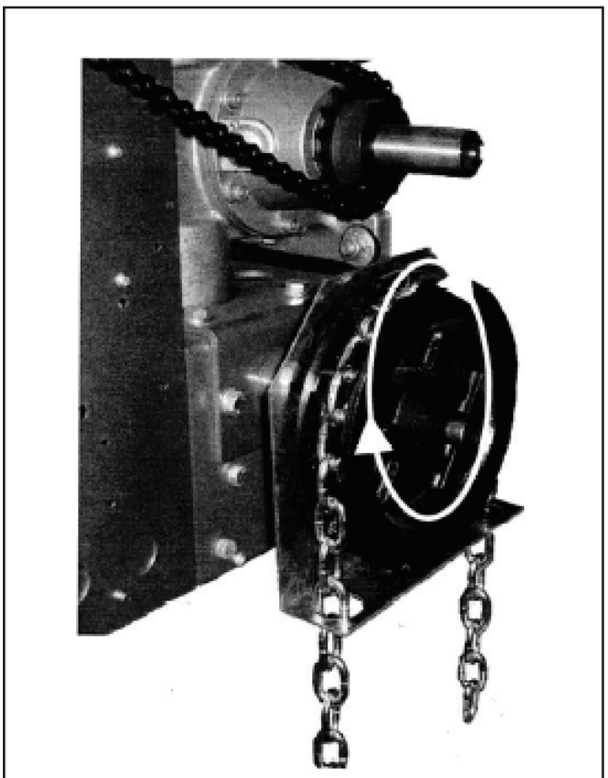
FIGURE 10

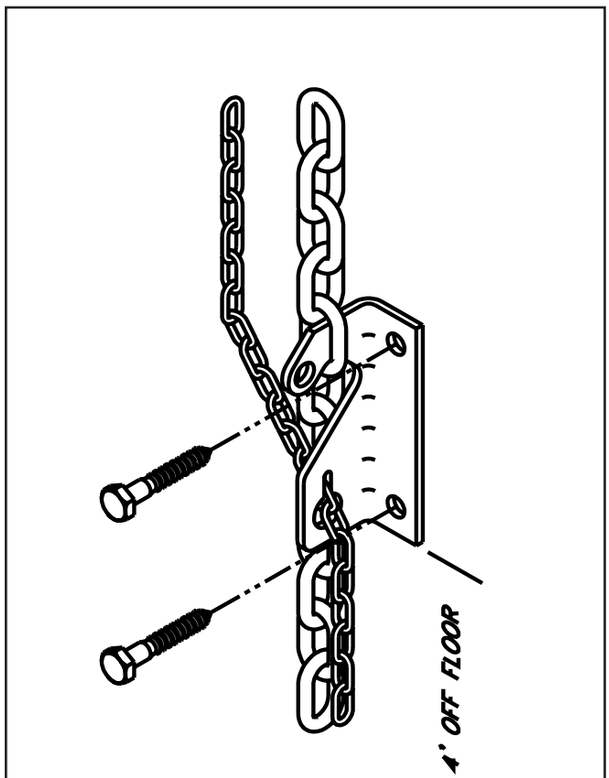

FIGURE 11

SETTING THE LIMIT SWITCHES

WARNING	TO AVOID RISK OF ENTRAPMENT AND POSSIBLE DAMAGE TO THE DOOR AND OPERATOR, THE LIMITS MUST BE ADJUSTED BEFORE APPLYING POWER TO THE OPERATOR.

1. Open the cover on the electrical enclosure. There are two limit nuts on the threaded shaft that move laterally along the shaft as the operator opens and closes the door. When a limit nut nears the end of the shaft, it activates a set of switches. The ***OPEN*** limit switch is on the LEFT, and the ***CLOSE*** limit switch is on the RIGHT. Auxiliary switches may also be present to control other function. These are mounted to a separate bracket and should not be confused with the the ***OPEN*** and ***CLOSE*** limit switches that are mounted to the back of the electrical enclosure box and are somewhat hidden from view.

2. Manually raise the door to a nearly open position.

3. Depress the limit nut retaining bracket away from the slots in the limit nuts. Turn the ***OPEN*** limit nut on the shaft until it engages the ***OPEN*** limit switch. The switch will sound an audible *click* when engaged. If the Open Limit is a DPDT switch (a total of 6 connecting terminals protruding from the switch body; an SPDT switch has only three terminals), you will need to listen for two audible clicks. Release the retaining bracket and be certain that it engages in slots of both limit nuts.

4. Manually lower the door to a nearly closed position, and repeat **Step #3** using the ***CLOSE*** limit nut and switch.

5. If auxiliary switches are present, the limit nut will actuate them just prior to activating the ***OPEN*** or ***CLOSE*** limit switch (This is pre-set at the factory).

6. Manually move the door to a half-open position to avoid door damage due to incorrect power supply phasing. On three-phase units, the door may initially run in the wrong direction when power is first applied (If it does, switch L1 and L2). With the door in mid-position, there will be time to stop the door before damage can happen if incorrect phasing occurs.

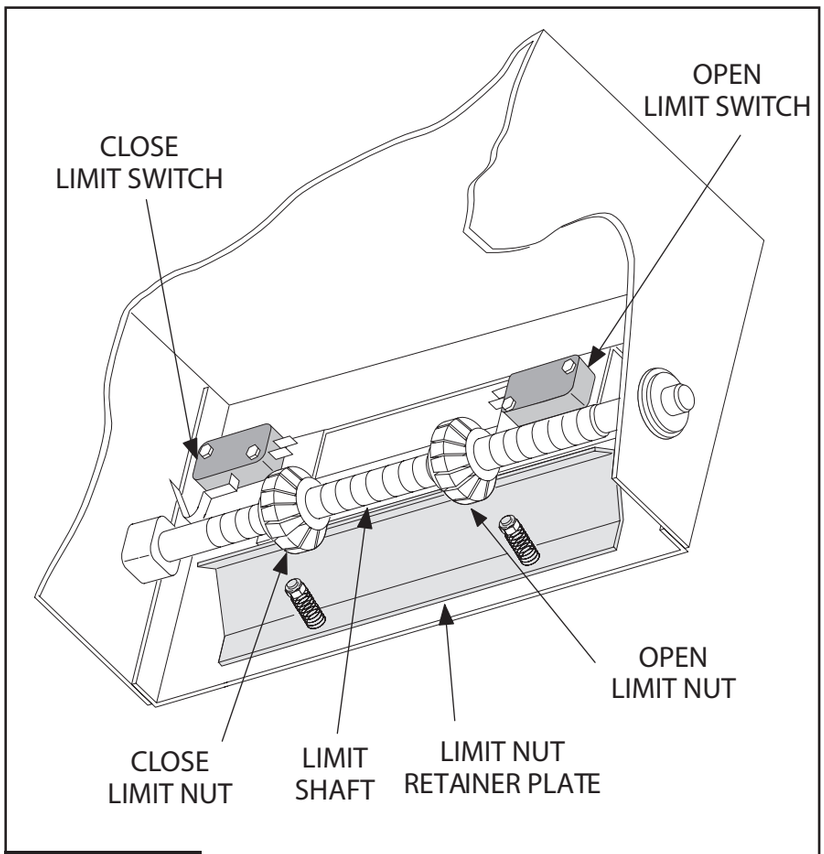

FIGURE 12

7. A final limit adjustment will be necessary after the connection of the power supply in order to ensure the door stops in the proper open and close positions.

ELECTRICAL WIRING INSTRUCTIONS

WARNING

TO PREVENT THE RISK OF PERSONAL INJURY OR DEATH:

- **DISCONNECT POWER AT THE FUSE BOX BEFORE PROCEEDING**
- **ELECTRICAL CONNECTIONS MUST BE MADE BY A QUALIFIED INDIVIDUAL**
- **OBSERVE LOCAL ELECTRICAL CODES WHEN WIRING THE OPERATOR**

NOTE: WMG operators are designed and constructed for use with voltages from 115VAC to 460VAC in single or three phase configurations. Check the operator nameplate label on the control box cover for the proper voltage and phase. The application of an improper input voltage or phase will result in catastrophic failure to the internal electrical components. Observe local electrical codes when wiring the operator.

When hard wiring, observe state and local electrical codes. A wiring diagram is attached to the inside of the control box cover. Connect the appropriate voltage and phase power leads to the appropriate terminals as per the wiring diagram, and connect a ground wire to the grounding screw. On three phase units, incorrect phasing of the power supply will cause the motor to rotate in the wrong direction (to open when ***CLOSE*** button is pushed, and vice-versa). To correct this, interchange any two of the incoming three-phase conductors.

The wiring diagram attached inside the cover of the control box details the field wiring terminal connections for the operator. Always connect the wires to the push-button controls and auxiliary devices exactly as shown.

WARNING

TO PREVENT THE RISK OF PERSONAL INJURY AND/OR DAMAGE TO DOOR OR PROPERTY, ONLY OPERATE DOOR CONTROL WHEN DOOR IS IN CLEAR VIEW. IF CONTROL STATION CANNOT BE LOCATED WHERE THE DOOR IS VISIBLE, OR IF ANY OTHER DEVICE IS USED TO CONTROL THE DOOR, AN AUXILIARY ENTRAPMENT DEVICE (DOOR EDGE OR PHOTOELECTRIC) MUST BE CONNECTED TO THE UNIT.

WARNING: Control voltage of the operator is 24VAC, Class 2. Do not run the power leads and the control circuit wiring in the same electrical conduit.

NOTE: MG Series Operators are pre-wired to accept reversing edge components. To comply with UL requirements, one of these systems must be installed and wired to the operator. Refer to wiring diagram.

For operator models not installed with reversing edge components or photoelectric device, ONLY ONE THREE-BUTTON STATION OR A CONTROL WIRED FOR CONSTANT PRESSURE TO CLOSE MAY BE USED TO CONTROL THE OPERATOR. THIS IS TO COMPLY WITH UL SAFETY REQUIREMENTS. Additionally, the control station must be located within clear sight of the door. Adjacent to the control station, the warning placard (included with the operator) must be installed (**Figure 13**).

WARNING: TO PREVENT ENTRAPMENT, DO NOT START DOOR DOWNWARD TRAVEL UNLESS DOORWAY IS CLEAR

FIGURE 13

WARNING	RISK OF ENTRAPMENT THAT MAY RESULT IN SERIOUS PERSONAL INJURY OR DEATH. DISCONNECT POWER TO THE OPENER BEFORE AND DURING INSTALLATION OF AN ACCESSORY, REVERSING DOOR EDGE OR PHOTOELECTRIC DEVICE. DO NOT RECONNECT POWER TO OPENER UNTIL INSTRUCTED TO DO SO. ENSURE DOORWAY IS CLEAR BEFORE STARTING TESTING OF UNIT.

Number 18 gauge wire or heavier must be used for wiring the control stations and auxiliary control devices to the operator. Smaller gauge wire will cause operational problems, especially when multiple push-button stations are used or during summer months.

ACCEPTED SAFETY EQUIPMENT

CAUTION

TO AVOID DAMAGE TO DOOR AND OPERATOR, ENSURE ALL DOOR LOCKS ARE DISABLED. USE AN INTERLOCK SWITCH IF A LOCK IS REQUIRED TO RETAIN FUNCTIONALITY.

Operators equipped with one of the following safety systems may have one or more additional means of control which should be wired in accordance with the diagram supplied in the operator.

- Door Edge Sensor and Interface Module manufactured by Miller Edge model series designated ME, MT, MU and CPT223 with suffix T2 provided with interface module model Signature Module model SM-102.
- Optical Door Edge Sensor and Photo Eye manufactured by Fraba Inc. Models OPTOEDGE, OPTOEYE; Part Nos. OSE-T, OSE-R, OSE-P, OPE.

SEE MANUFACTURER'S INSTRUCTIONS FOR INSTALLATION OF THIS SAFETY EQUIPMENT.

TESTING

WARNING

ALWAYS DISCONNECT POWER TO THE OPERATOR BEFORE SERVICING, CONNECTING ACCESSORY DEVICES OR MAKING ADJUSTMENTS.

WARNING

DO NOT STAND UNDER DOOR TO TEST REVERSING EDGE. USE A CORRUGATED BOX OR SIMILAR OBJECT.

Following installation, the operator MUST be tested and respond correctly to all controls as specified on the wiring diagram. Keep personnel and equipment clear of the area around the door when performing the tests. When testing the 3-button wall station, first observe that each button operates the door in the direction indicated and that the ***STOP*** button performs that function. With the door stopped at its full open position, the ***OPEN*** button should be inoperative. This should be verified and, likewise, the ***CLOSE*** button should be inoperative with the door fully closed.

Certain operator control circuits use only a single-button or a 2-button control station, and may be designed to function differently than the more common 3-button circuit described above. Test the controls in accordance with the proper response for your installation.

Observe the door when traveling in each direction for smoothness of operation. Test the setting of the clutch (if equipped) by restraining the door by hand. The clutch should slip. Re-check the limit settings. The door should close tightly at the floor without excessive impact. Likewise, it should fully clear the door opening without the carrier striking the stops on the rail.

MG Series Operators are equipped with a reversing edge circuit for use with foam edge door components. To test it for proper reversal, place an object beneath the leading edge of the door. The door should instantly reverse when it comes into contact with the object provided the height of the object exceeds the cut out point built into the Close Limit Switch (approximately four inches).

If the operator is equipped with other means of control, such as additional 3-button stations or radio controls, each of these should be tested separately for proper operation.

To test the manual disconnect, first move the door to the fully closed position. Disconnect the power to the operator. *Manual Door Operation* mode should engage when the release chain is pulled. The door can then be manually opened or closed by physically moving the door or using the hoist chain. If it is difficult to engage and/or the jackshaft to doorshaft chain appears to be under compression, reset the ***CLOSE*** limit slightly to reduce the door travel in the close direction.

IMPORTANT SAFETY INSTRUCTIONS FOR OWNER

WARNING

TO REDUCE THE RISK OF SEVERE INJURY OR DEATH: READ AND FOLLOW ALL INSTRUCTIONS!

- NEVER let children operate or play with door controls. Keep remote control away from children.
- ALWAYS keep a moving door in sight and keep people and objects away from the door area until the door is completely closed. NO ONE SHOULD CROSS THE PATH OF A MOVING DOOR.
- TEST THE DOOR OPENER'S REVERSING FEATURE (where applicable) MONTHLY. The door MUST reverse upon contact with a 4" high object on the floor.
- After adjusting the force setting, if equipped with a clutch, or the limit of travel, ALWAYS RETEST THE OPENER. Failure to adjust the opener properly may result in serious injury or death.
- DO NOT over adjust the force setting (clutch) to compensate for a poorly working door.
- KEEP THE GARAGE DOOR PROPERLY BALANCED (See the door owner's manual).
- AN IMPROPERLY BALANCED DOOR MAY CAUSE SEVERE INJURY OR DEATH.
- Have a qualified service person make repairs to cables, spring assemblies and other hardware.
- **SAVE THIS INSTRUCTION MANUAL AND GIVE IT TO THE END USER.**

NOTE: It is now necessary to turn on the power in order to run the Opener to check for proper operation and limit settings. Before doing so, ensure that all mounting hardware are installed and properly tightened, that all electrical connections are per local code requirements, and that proper wiring practices have been followed. Also, double-check that all ropes have been removed from the door and that the doorway is clear.

WARNING

FAILURE TO TEST REVERSING SYSTEM COULD RESULT IN DEATH OR SERIOUS INJURY. TEST THIS SYSTEM ONCE A MONTH.

WARNING

AVOID ELECTROCUTION: DO NOT ROUTE LOW VOLTAGE WIRES IN SAME CONDUIT AS HIGH VOLTAGE WIRES. FOLLOW ALL LOCAL ELECTRICAL CODES OR THE NATIONAL ELECTRICAL CODE (NEC).

WIRING TERMS

MOMENTARY CONTACT: Button can be pushed and then released and door will keep moving or stop without maintaining pressure on the button.

CONSTANT PRESSURE: Constant pressure is required on the button in order for continued door movement. When the button is released, the door will stop and possibly reverse to full open depending on wiring type.

DOOR EDGE/ PHOTOELECTRIC INPUT: The operator wiring provides for input from an optional electric door bottom edge, or photoelectric device that will cause a closing door to stop and may reverse it to open depending on the wiring type.

MAINTENANCE SUGGESTIONS

WARNING

DO NOT STAND UNDER DOOR TO TEST REVERSING EDGE. USE A CORRUGATED BOX OR SIMILAR OBJECT.

Normally, very little maintenance is required. A monthly visual inspection must be made for loose or missing hardware and for excessive slack in the jackshaft chain. The brake is adjusted at the factory and will need periodic adjustment for wear.

Test the reversing edge circuit or components (where applicable) at least once a month by permitting the door to contact an obstruction while closing. Periodic inspection of gear box oil level should be made by removing oil level plug. If oil level is below this plug, add Mobil 1 Gear Oil or equivalent to bring to proper level.

Lubrication of the operator is not required. It is important - for trouble-free service from the operator - that the door be kept free from binding, is properly counter-balanced and periodically lubricated. **An annual inspection of the door BY A QUALIFIED SERVICE TECHNICIAN IS RECOMMENDED.***

**The door must be in good operating condition. An electrical door operator cannot move a garage door that is in poor condition. The door must operate freely in the track, with no binding or obstructions, and must be well-balanced. Check the spring balance of your door by bringing the door to a half-open position and leaving it there. If the door stays in that position, it is well balanced. If it moves more than a few inches, the springs possibly need adjustment. CALL A QUALIFIED SERVICE TECHNICIAN.*

WARNING: Repairs and adjustments to the door and the door operator should be performed only by someone qualified to service commercial overhead doors and operators.

We constantly strive to maintain and improve qualify of our products. Therefore, the components shown in the illustrations were accurate at time of printing but are subject to change without notice as quality improvements are made.

TROUBLE SHOOTING CHART

SYMPTOM	POSSIBLE CAUSE	SOLUTION
Motor runs but door does not move.	Door jammed or obstructed.	Check manual operation of door.
	Sprocket key missing or drive chain broken.	Check drive chain for operation.
Limit switches do not hold setting.	Drive chain too loose; permits chain to jump teeth on sprocket.	Adjust chain to proper tension.
	Limit nuts binding on screw, causing them to jump position on retaining bracket.	Check for free rotation on limit screw. Lubricate screw or replace nuts if threads are defective.
	Limit nut retaining bracket not engaging notches in nuts.	Set nuts and be sure bracket is in notch on each nut.
Door drifts when operator shuts off.	Inoperative or improperly adjusted brake.	Adjust brake.
	Door tension incorrect.	Disconnect operator and check operation of door.
Motor hums - does not run.	Dead phase (on 3-phase).	Check power supply.
	Brake does not release.	Check wires to brake solenoid. Check adjustment.
	Door locked or jammed.	Check door. Try manual operation.
Motor does not run when open or close wall button is pressed.	Building fuse blown or circuit breaker tripped.	Check power supply fuses, circuit breakers, disconnect switch for cause.
	Overload protector tripped.	Reset and check for cause.
	NOTE: To isolate cause, operate contactor solenoid plunger manually. If motor runs, cause is in pushbutton circuit.	Check pushbutton circuits for voltage against voltage indicated on wiring diagram. Check pushbutton wiring. Check interlock switch wiring.
	Interlock switch broken or inoperative.	Check that brake release pin is making contact with interlock switch located inside chassis box. Check wiring to switch and switch function. Normally closed for operation electrically and normally open for hand chain operation.
Operator closes door when ***OPEN*** button is pressed, and limit switches do not function properly.	On 3-phase operators, power supply is connected out of phase.	Interchange connections of any two power supply leads (See wiring diagram).
	Operator not installed correctly.	Re-mount operator so that motor is “up” or toward door wall. Contact factory as to wiring changes required.
Operator fails to shut off at fully open or fully closed position	On 3-phase operators, power supply is connected out of phase.	Check phase as above.
	Limit nuts not adjusted properly.	See ***Limit Adjustments*** section
	Defective limit switch.	Operate limit switch manually while door is moving to determine if switch is operative.
	Single phase operator (without instant reverse motor). Stuck pushbutton or short in control wiring.	If door overrides ***UP*** limit, check limit.
	Limit drive chain broken or inoperative.	Replace chain. Check limit screw for rotating.

Notes

PowerMaster

Limited 2-Year Warranty

MECHANICAL PARTS:
PowerMaster warrants all DOOR OPERATORS (MG, H, J, T categories) to be free of defects in materials and workmanship for a period of two (2) years from date of manufacture, provided that product has been registered. A one year warranty applies if product has not been registered.

ELECTRICAL PARTS (including boards, switches, relays, etc):
PowerMaster warrants electrical parts for a two (2) year period, provided that product has been registered. A one year warranty applies if product has not been registered.

If any part is found to be defective during this period, new parts will be furnished free of charge. Failure of this product due to misuse, improper installation, alterations, vandalism, acts of God, or lack of maintenance is ***not*** covered under this warranty, and voids any other implied warranties herein.

PowerMaster is ***not responsible*** for any labor charges incurred in connection with the installation of warranted parts.

In order to activate this warranty, the registration form found with your operator **MUST BE COMPLETED AND RETURNED WITHIN THIRTY CALENDAR DAYS FROM DATE OF PURCHASE.** Send completed forms to PowerMaster Registrations, 140 Emjay Blvd, Brentwood NY 11717

You can also register via email to Office@PowerMasterNY.com.

If registration is not activated, a **ONE YEAR** warranty from date of manufacture will apply for all claims.

REGISTRATION INFORMATION

Operator Information

Model WMG

Serial # _____

Date Installed _____

Location Installed

Address _____

Address _____

Address _____

Installer's Information

Company Name _____

Address _____

Address 2 _____

City, State, Zip _____

Telephone # _____

Contact Name _____

Need Technical Support?

Visit: www.PowerMasterNY.com

Call us toll free @ 1-800-243-4476

Email us: technical@PowerMasterNY.com

www.facebook.com/PowerMasterOperators

Scan **QR Code** with your Smart phone to **find us** on the web!

www.PowerMasterNY.com

powermaster

MANUFACTURED BY V.E. POWER DOOR CO,INC.

REV 2018-0330