Five Innovative Radiation-Tolerant Semiconductor Device Patents Created For Avionics, Space, Military, Automotive and Consumer Applications

Inventor: Jeffrey Titus

Assignment: United States of America as represented by the Secretary of the Navy

NAVSEA
WARFARE CENTERS
CRANE

Explore

SEMICONDUCTORS

Integrated Lateral MOSFET & JFET Device: 9,425,187

Lateral field effect structure integrates a MOS and JFET gate, to modulate current/voltage responses by using multiple semi-conductive channel regions. Structure mitigates electromagnetic/radiation damage. page 5

Integrated Vertical MOSFET & JFET Device: 9,425,303

Vertical field effect structure integrates a MOS and JFET gate, to modulate current/voltage responses by using multiple semi-conductive channel regions. Structure mitigates electromagnetic/radiation damage. page 6

Integrated Lateral MOSFET & MESFET Device: 9,455,701

Lateral field effect structure integrates a MOS and MES gate, to modulate current/voltage responses by using multiple semi-conductive channel regions. Structure mitigates electromagnetic/radiation damage. page 7

Integrated Lateral MOSFET & Buried JFET Device: 9,595,519

Lateral field effect structure integrates a MOS and buried JFET gate, to modulate current/voltage responses by using multiple semi-conductive channel regions. Structure mitigates electromagnetic/radiation damage. page 8

Integrated Vertical MOSFET & MESFET Device: 9,735,769

Vertical field effect structure integrates a MOS gate and MES gate, to modulate current/voltage responses by using multiple semi-conductive channel regions. Structure mitigates electromagnetic/radiation damage. page 9

+1 812-381-5233
CRAN_T2@Navy.mil
Naval Surface Warfare Center,
Crane Division

OUR TECHNOLOGY

NAVSEA WARFARE CENTERS CRANE

Our patented products can be manufactured as either n- or p-channel devices (or both). Our products are normally planar and self-aligned (although other variations are possible). They can be manufactured using different semiconductor base materials such as silicon (Si), silicon carbide (SiC), gallium arsenide (GaAs), and others. By adjusting the product's doping profile, thickness and layout, our product can produce a range of blocking voltages from a few volts to several thousand volts. For example, using silicon as a base material, blocking voltages can range from a few volts to over 1000V; and, using silicon carbide as a base material, blocking voltages can range from a few volts to over 4800V.

Our products' current-handling capabilities are determined from the device's active area. The area is easily modified by changing the number of replicated cells that are placed in parallel. Larger areas (i.e., more cells) produce higher current-handling capabilities.

By incorporating variations to produce unique blocking voltages and current-handling capabilities, families of devices with different electrical capabilities and performance can be manufactured and marketed.
Our patented products are compatible with existing semiconductor manufacturing processes. Products can be manufactured as discrete power devices or manufactured into more complex integrated devices such as linear or analog power circuit designs.

Naval Surface Warfare Center (NSWC) Crane performed limited simulations using SILVACO to verify our product layouts exhibited suitable electrical performance. Simulations indicated that electrical performance of patented products were comparable to equivalent commercial MOS device responses (using similar base materials, doping profiles, and layout).

This booklet contains a summary of five of our semiconductor patents; and information on how to connect with NSWC Crane, if you are interested in collaborative research or patent licensing.

Manufacturing Details:

Manufacturing process is compatible with standard commercial foundry processing steps.

Patented products integrate two independent gates (some designs/layouts may require two levels of metal or polysilicon to access our dual gates).

Topology is compatible with stripe, rectangle, hexagonal, square, and other cell layouts.

Patented products are compatible with different semiconductor base materials such as silicon (Si), silicon carbide (SiC), and gallium arsenide (GaAs).

Limited simulations (using SILVACO) were performed to compare electrical performance of conventional MOSFET to electrical performance of patented embodiments. Those simulations results indicated similar electrical performance. Simulation results of their radiation performance indicated that the patented products were more radiation tolerant.

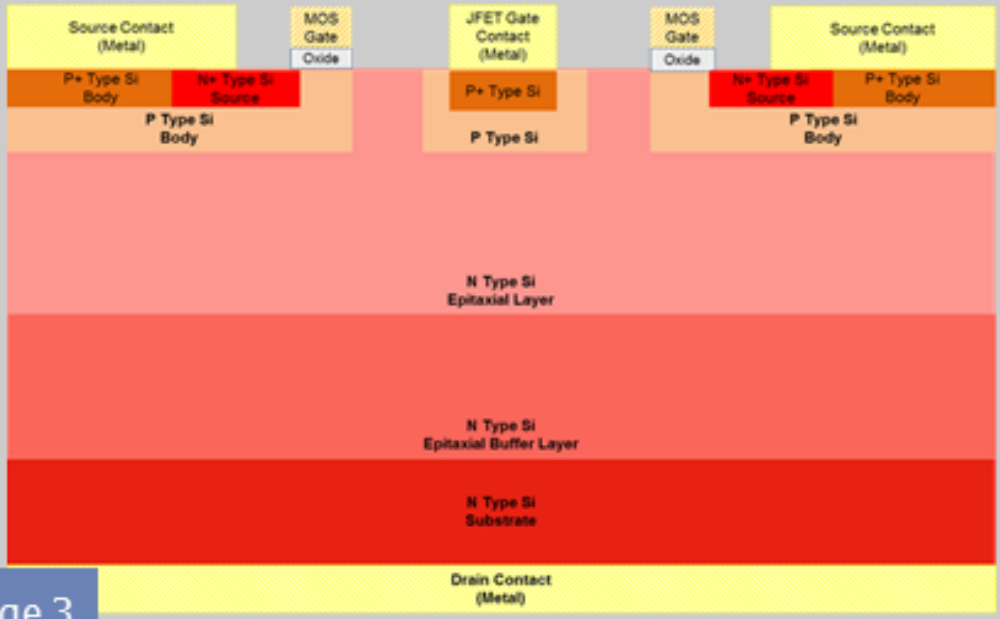

Compatibility & Operation

Our patented products incorporate radiation-hardened by design (RHBD) layouts offering higher immunity to degradation caused by electromagnetic/radiation effects. Commercially available lateral and vertical MOSFET constructs are susceptible to degradation caused by electromagnetic/radiation effects, but in our products, that degradation is mitigated by using a second RHBD gate construct. Additional radiation performance can be achieved by manufacturing patented products by using proven radiation-hardened processing techniques (e.g., dual epitaxial layer).

Our technology allows state-of-the-art signal modulation (integrated, smaller, and more efficient) compared to conventional designs where two discrete transistors are used to perform signal modulation as well as providing higher tolerances to electromagnetic/radiation effects.

SILVACO Simulations:

Using limited device simulations, key electrical responses of patented structures were compared to conventional MOSFET structures:

- R_{DSON} Slight Increase
- I_{DSON} Slight Decrease
- V_{TH} Similar
- I_{DSS} Similar
- I_{GSS} Similar but added a 2nd Gate Current
- BV_{DSS} Similar

Using limited device simulations, the effectiveness of the second gate was investigated:

- Excellent AC Modulation of IDS
- Excellent Control of IDC (Pre- and Post-TID Oxide Damage Injected)

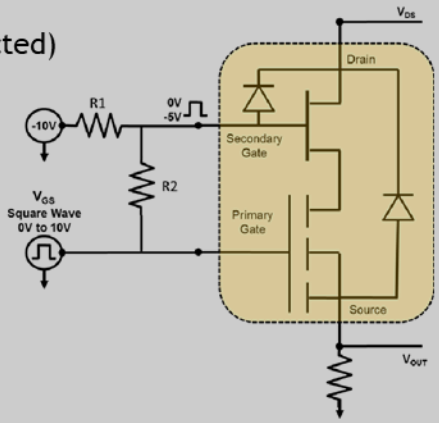

SINGLE-GATE CONTROL CONFIGURATION

Our patented products can be operated under a single gate, control configuration. Under this configuration, its electrical and switching characteristics are comparable to a commercially equivalent MOSFET. Limited simulation results indicated negligible differences in overall performance parameters.

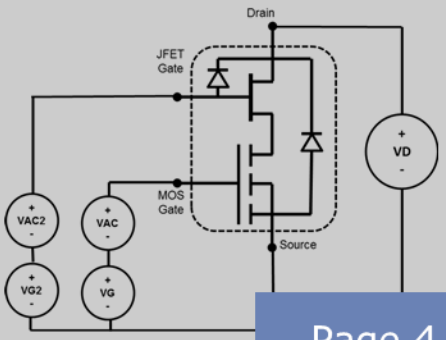

DUAL-GATE CONTROL CONFIGURATION

Our patented products can be operated under a dual gate, control configuration. Under this configuration, its switching characteristics are comparable to placing two commercially equivalent MOSFETs in series. However, our patented products would be a smaller footprint and would be matched for higher performance.

Integrated Lateral MOSFET & JFET Device: 9,425,187

Our dual gated lateral FET can be formed and operable for modulating current and/or voltage responses as well as mitigating damaging electromagnetic/radiation effects by controlling the FET's semi-conductive channel region (SCR) using a JFET structure disposed in proximity to the lateral MOSFET SCR and designed to independently control the lateral MOSFET's SCR. Methods of operation for a variety of modes are provided.

Our products can be manufactured using different semiconductor base materials (e.g., Si, SiC, and GaAs). Products manufactured in silicon can produce blocking voltages from a few volts to over 150V depending upon the materials doping profiles, layer thicknesses, and layout. Products can be doped to produce either n- or p-channel devices.

Our lateral dual-gate embodiments can be manufactured using existing semiconductor foundry processes with minimal effort and costs. The lateral MOS gate can degrade from electromagnetic/radiation effects, but that degradation is, in turn, compensated by the buried JFET gate.

Our manufactured products can be externally configured (in circuit) using either single- or dual-gate control. Dual-gate control configurations allow signal modulation and other RF applications.

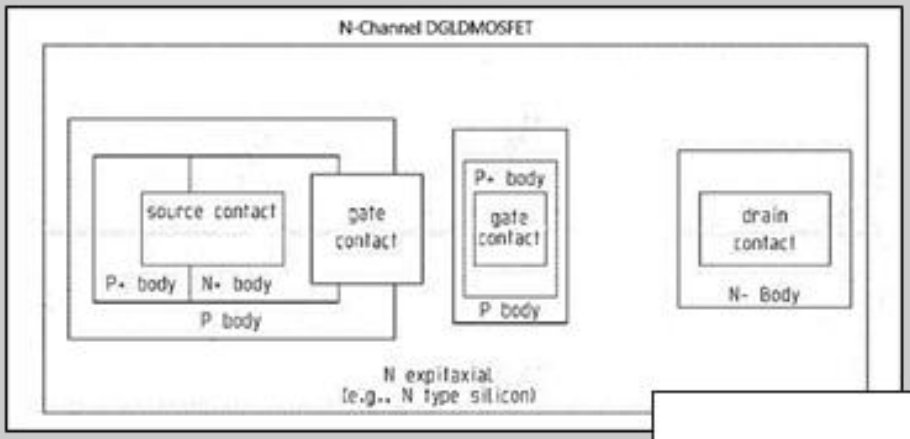

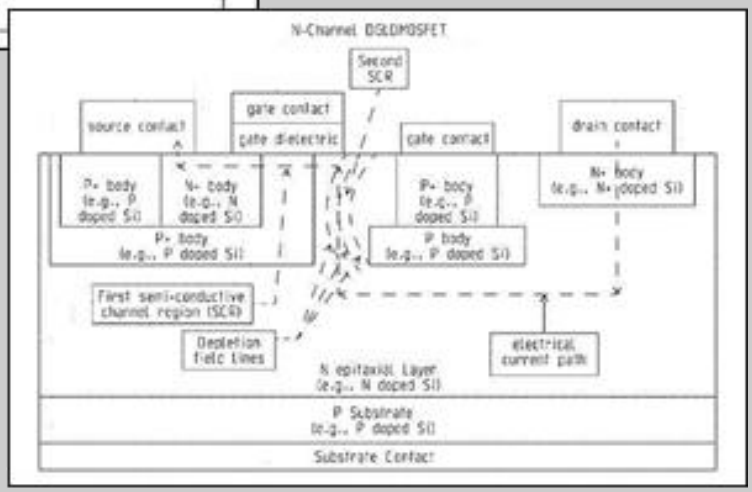

Expected Radiation Enhancements

Total Ionizing Dose (TID)
- Reduce Drain Leakage (Idss)
- Reduce Channel Inversion (Vth)

Heavy Ions
- Reduce Burnout
- Reduce Gate Rupture

Prompt Dose
- Reduce Burnout
- Reduce Channel Inversion (Vth)

Integrated Vertical MOSFET & JFET Device: 9,425,303

Our integrated MOS and JFET vertical FET is formed and operable for modulating current and/or voltage responses as well as mitigating damaging electromagnetic/radiation effects by controlling the FET's semi-conductive channel region (SCR) using a JFET structure disposed in proximity to the vertical FET's SCR and designed to independently control the vertical FET's SCR. This allows the JFET structure to modulate and control the current/voltage response, which, otherwise, would be controlled by the MOS structure.

We provide control system operations to include automated and manual systems. Automated systems can include radiation sensors as well as other control systems such as high voltage radio frequency transmitter or receiver systems. Methods of operation for a variety of modes are provided.

Our product can be manufactured using different semiconductor base materials (e.g., Si, SiC, and GaAs). Products manufactured in silicon can produce blocking voltages from a few volts to over 1000V. Products manufactured in silicon carbide can produce blocking voltages from a few volts to over 4800V. Products can be selectively doped to produce either n- or p-channel devices (or both).

Our vertical dual-gate product can be manufactured using existing semiconductor foundry processes. The vertical MOS operation can degrade from electromagnetic/radiation effects, but that degradation can, in turn, be compensated by the JFET.

Once manufactured, products can be externally configured (in circuit) using either single- or dual-gate control. Dual-gate control configurations allow signal modulation for RF applications.

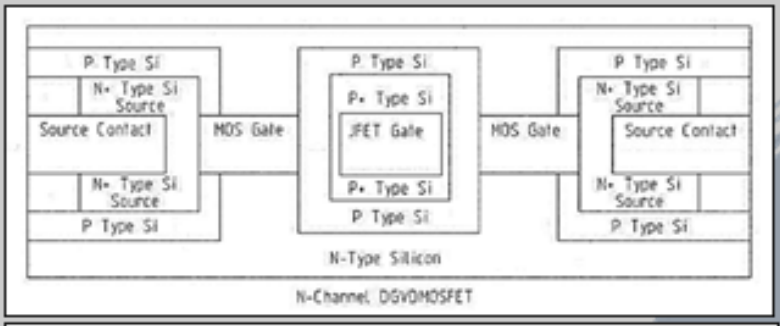

N-Channel DGVDMOSFET

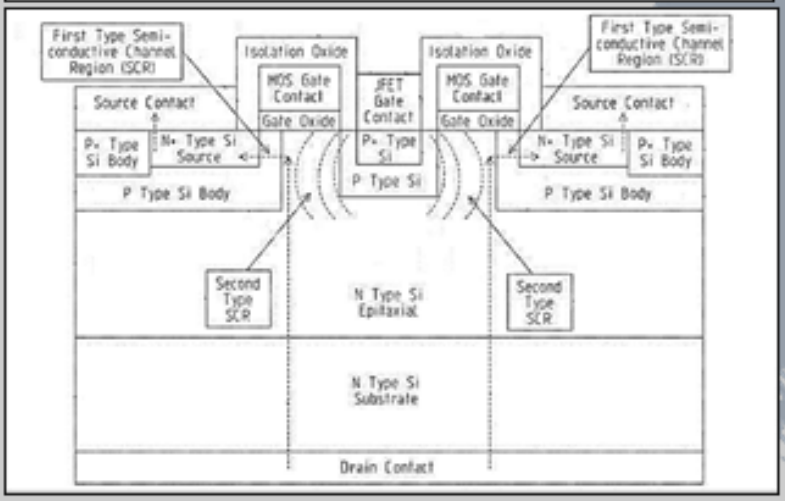

Expected Radiation Enhancements

Total Ionizing Dose (TID)

- Reduce Drain Leakage (Idss)
- Reduce Channel Inversion (Vth)

Heavy Ions

- Reduce Burnout
- Reduce Gate Rupture

Prompt Dose

- Reduce Burnout
- Reduce Channel Inversion (Vth)

Integrated Lateral MOSFET & MESFET Device: 9,455,701

Our dual gate, lateral FET is formed and operable for modulating current and/or voltage responses as well as mitigating damaging electromagnetic/radiation effects by controlling the FET's semi-conductive channel region (SCR) using a metal-semiconductor structure disposed in proximity to the lateral FET's SCR and designed to independently control the lateral FET's SCR. Methods of operation for a variety of modes are provided.

Our products can be manufactured using different semiconductor base materials (e.g., Si, SiC, and GaAs). Products manufactured in silicon can produce blocking voltages from a few volts to over 150V depending upon the materials' doping profiles, layer thicknesses and layout. Products can be doped to produce either n-or p-channel devices.

Our lateral dual-gate products can be manufactured using existing semiconductor foundry processes. The lateral MOS gate can degrade from electromagnetic/radiation effects, but that degradation is, in turn, compensated by the metal-semiconductor gate.

Once manufactured, products can be externally configured (in circuit) using either single- or dual-gate control. Dual-gate control configurations allow signal modulation for RF applications.

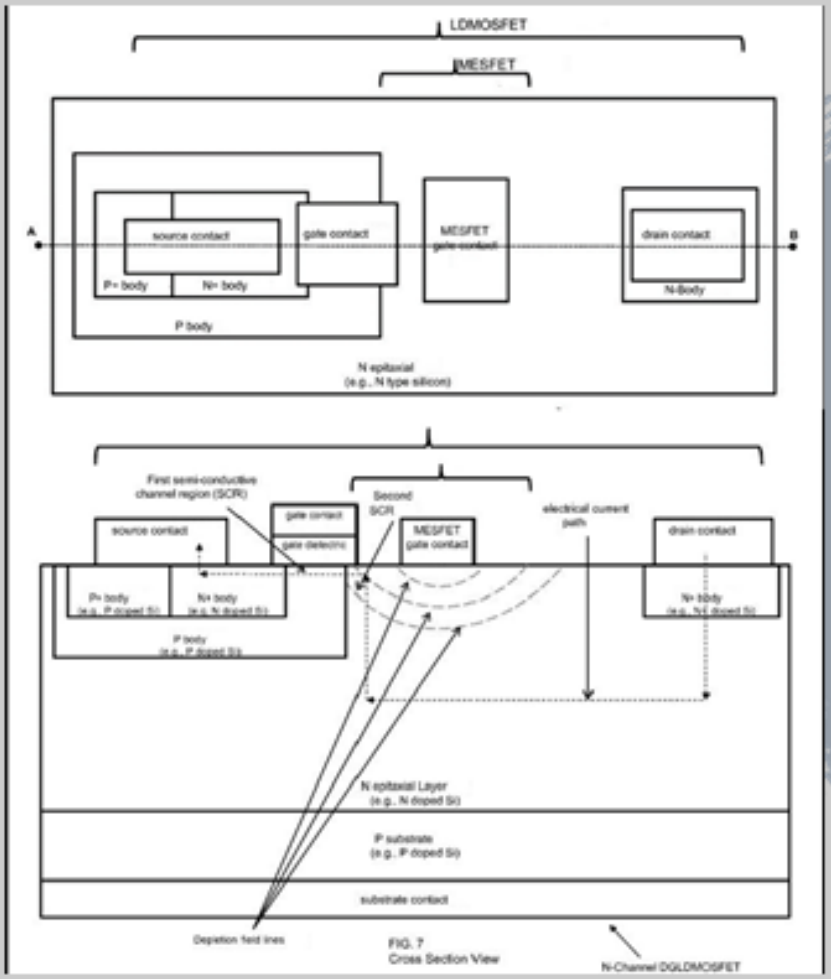

Expected Radiation Enhancements

Total Ionizing Dose (TID)

- Reduce Drain Leakage (Idss)
- Reduce Channel Inversion (Vth)

Heavy Ions

- Reduce Burnout
- Reduce Gate Rupture

Prompt Dose

- Reduce Burnout
- Reduce Channel Inversion (Vth)

Integrated Lateral MOSFET & Buried JFET Device: 9,595,519

Our product is designed to control current flow and to mitigate electromagnetic/radiation effects by using a merged MOS gate with a buried junction field effect transistor (JFET) with a certain orientation to each other creating a dual gate, lateral field effect transistor (DGLFET). Products can be formed and operable for modulating current and/or voltage responses as well as mitigating damaging electromagnetic/radiation effects on the performance of the lateral MOSFET by controlling the semi-conductive channel region (SCR) using a buried JFET structure disposed perpendicularly with respect to the lateral MOSFET SCR and designed to independently control the lateral MOSFET's SCR. A control system for controlling operation is also provided to included automated systems including sensors as well as manually operated systems. Automated systems can include radiation sensors as well as other control systems such as radio frequency transmitter or receiver systems. Methods of operation for a variety of modes are provided.

Our product can be manufactured using different semiconductor base materials (e.g., Si, SiC, and GaAs). Products manufactured in silicon can produce blocking voltages from a few volts to over 150V depending upon the doping and thickness of the epitaxial layer. Products manufactured in silicon carbide can produce blocking voltages from a few volts to over 1000V depending upon the materials' doping, thickness, and layout. Products can be doped to yield either n- or p-channel devices. These lateral dual-gate embodiments can be manufactured using existing semiconductor foundry processes.

The lateral MOS portion can degrade from electromagnetic/radiation effects, but that degradation can be compensated by the buried JFET portion, which doesn't degrade.

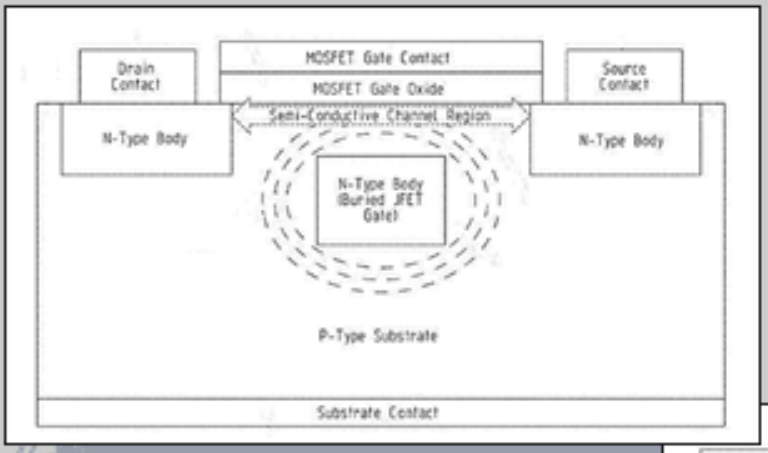

Expected Radiation Enhancements

Total Ionizing Dose (TID)

- Reduce Drain Leakage (Idss)
- Reduce Channel Inversion (Vth)

Heavy Ions

- Reduce Burnout
- Reduce Gate Rupture

Prompt Dose

- Reduce Burnout
- Reduce Channel Inversion (Vth)

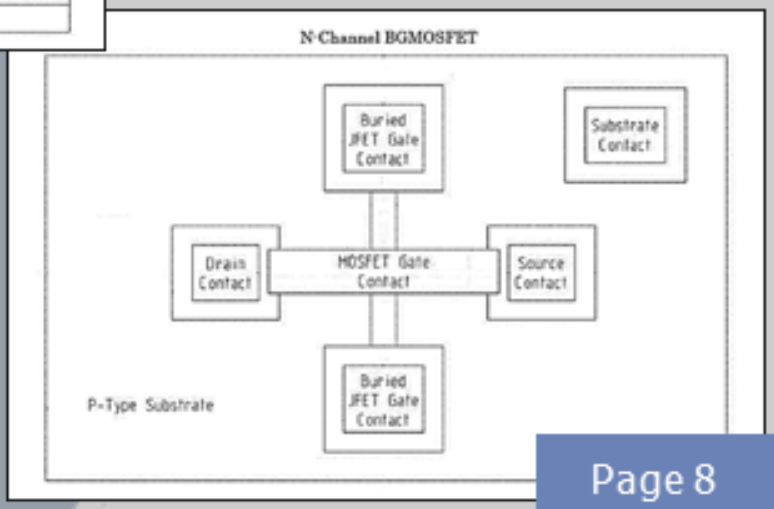

Integrated Vertical MOSFET & MESFET Device: 9,735,769

Our dual gate, vertical FET is formed and operable for modulating current and/or voltage responses as well as mitigating damaging electromagnetic/radiation effects by controlling the FET's semi-conductive channel region (SCR) using a metal-semiconductor structure disposed in proximity to the vertical FET's SCR and designed to independently control the vertical FET's SCR. A control system for controlling operation is also provided in our patent to included automated systems including sensors as well as manually operated systems. Automated systems can include radiation sensors as well as other control systems such as high voltage radio frequency transmitter or receiver systems. Methods of operation for a variety of modes are provided.

Our product can be manufactured using different semiconductor base materials (e.g., Si, SiC, and GaAs). Products manufactured in silicon can produce blocking voltages from a few volts to over 1000V depending upon the materials' doping profile, thickness, and layout. Products manufactured in silicon carbide can produce blocking voltages from a few volts to over 4800V depending upon the materials' doping profile, thickness, and layout. Products can be doped to produce either n- or p-channel devices (or both).

Our vertical dual-gate product can be manufactured using existing semiconductor foundry processes. The vertical MOS gate can degrade from electromagnetic/radiation effects, but that degradation can, in turn, be compensated by the metal-semiconductor gate.

Once manufactured, products can be externally configured (in circuit) using either single- or dual-gate control. Dual-gate control configurations allow signal modulation for RF applications.

Expected Radiation Enhancements

Total Ionizing Dose (TID)

- Reduce Drain Leakage (Idss)
- Reduce Channel Inversion (Vth)

Heavy Ions

- Reduce Burnout
- Reduce Gate Rupture

Prompt Dose

- Reduce Burnout
- Reduce Channel Inversion (Vth)

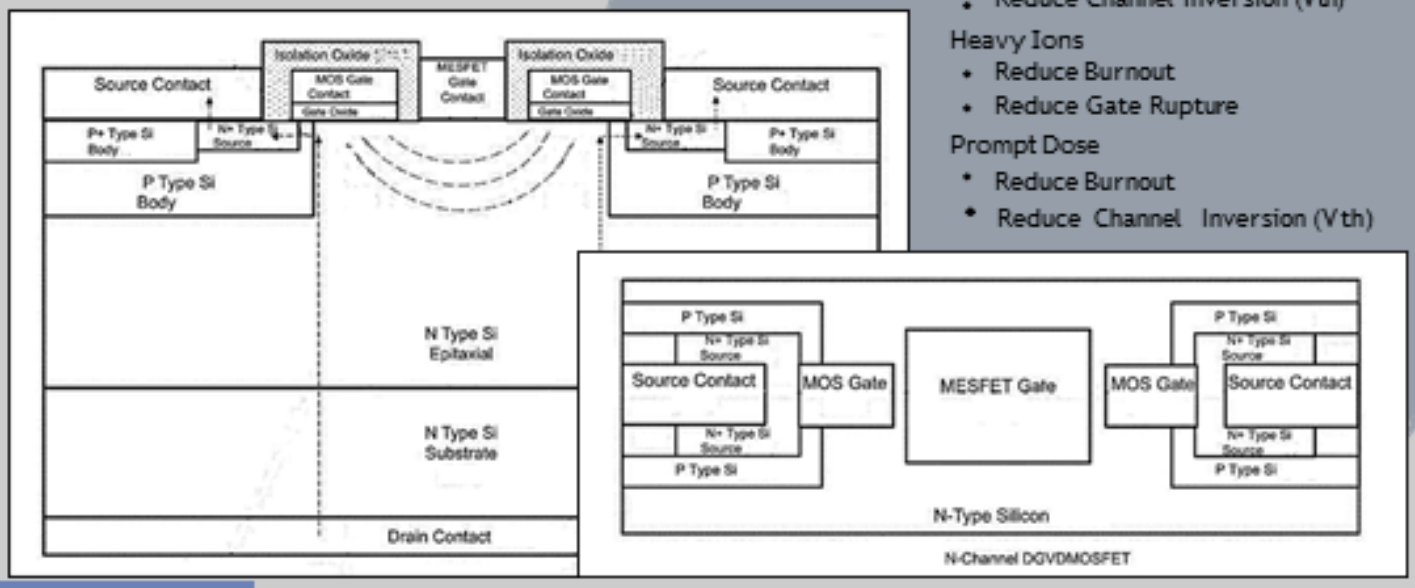

Joining Forces

Technology Transfer

NAVSEA
WARFARE CENTERS
CRANE

Crane's Technology Transfer program allows the Navy the ability to share our federally developed technology with state and local government and private industry. We work with businesses, entrepreneurs, and start-ups. Our objective is to create partnerships with various industry and academia, license technologies, and encourage and assist with the transfer of new technologies to the private sector.

Technology transfer can provide the *missing link* for an industrial process, or provide an opportunity to chat with a subject matter expert to learn about new processes or ask questions.

Academic institutions will also benefit by means of scientific discussions applicable to student experiments and questions, and by the information exchange among academic personnel.

NWSC Crane's Technology Transfer allows government technology to join forces to strengthen the U.S. industrial base. These technologies are available for public use. There are a number of ways in which the actual transfer may take place, some of these methods include patent licensing as well as Cooperative Research agreements.

Patent Licensing

These technologies are available for licensing and cooperative research developments. How hard is it to license government tech? We can easily set up virtual or face-to-face meetings as well as conference calls to discuss options with you. It is our goal at NSWC Crane to provide you with a streamlined process for securing your agreements and educating you about working with the Department of Defense.

Benefits to Working with Crane

- ✓ Negotiate directly with the Lab
- ✓ Licensing is fast and easy
- ✓ Select technology data packages available

Need some help? Contact us today to speak to a Tech Transfer representative to help you find the technology you are looking for. We can also assist you with the licensing process or give you an opportunity to learn more about our program.

+1 812-381-5233

CRAN_T2@Navy.mil

Naval Surface Warfare Center,
Crane Division

NAVSEA
WARFARE CENTERS
CRANE

Ready to Learn More?

Scan this QR Code or visit *TechLinkCenter.org* and search for *Jeff Titus* to view a collection of the patents discussed within this resource.

NSWC CRANE - TECH TRANSFER

812-381-5233

CRAN_T2@Navy.mil