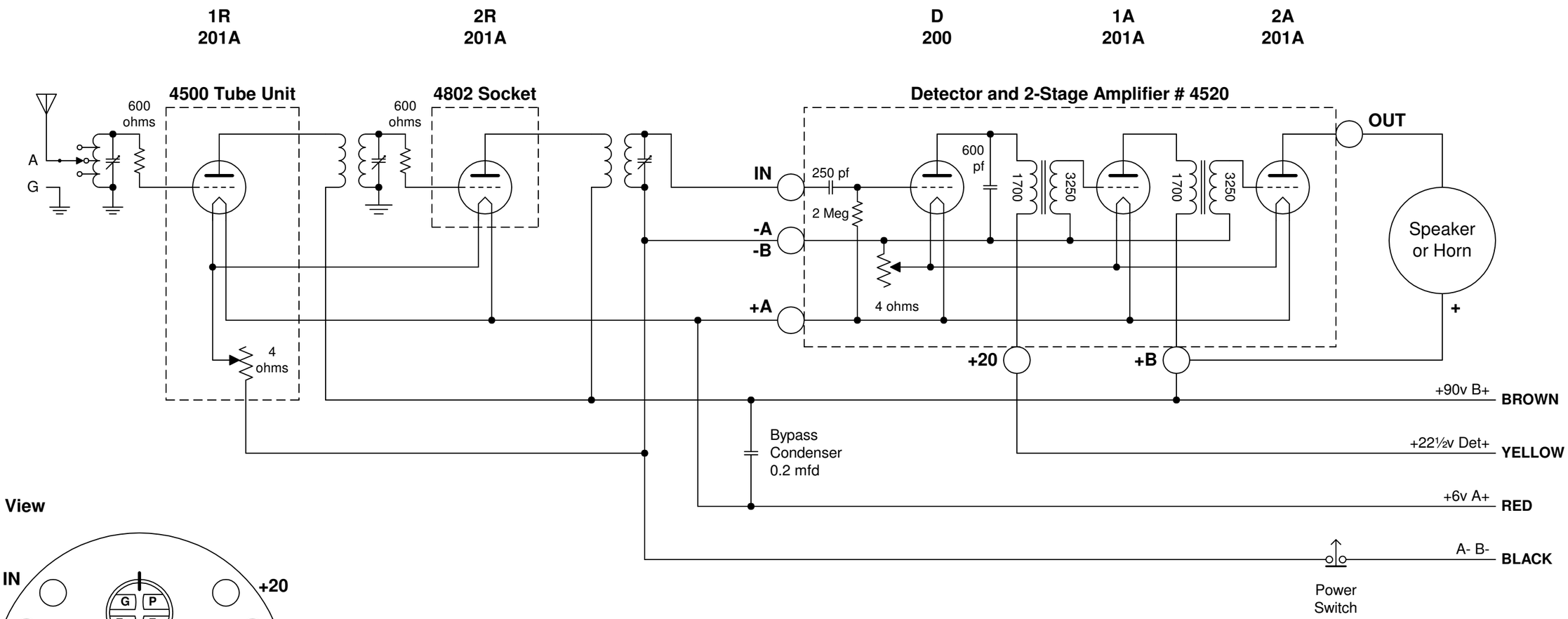

Top View

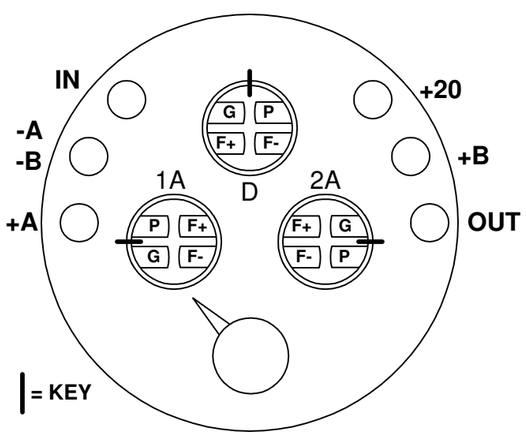

Notes:

1) This circuit is designed to use a type 200 tube (5 volt 1-amp filament) as the detector and type 201A tubes with 5 volt 1/4 amp filaments as audio amplifiers.

2) The 200A detector with 1/4-amp filament was introduced after this set went out of production. The 200A will work and could have been installed as a replacement. A 201 or 201A could also be used as the detector.

3) Filament polarity (F+ and F-) reflect the connections in this unit and may differ from generic documentation.

4) Numbers on transformer windings are DC resistance in ohms.

5) The phone condenser measures 600 pf in the units examined. No monimal value exists in the literature.

Battery Connections

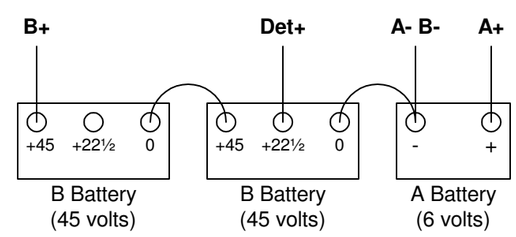

This schematic is 11" x 17"

PRELIMINARY
The information presented is believed to be correct.
However, it is subject to revision at any time.

REV	DATE	DESCRIPTION
B	19 Feb 2011	Corrected rheostats; added grid resistors
A	09 May 2007	Original

REVISIONS

This schematic covers models: 10 4700

The factory catalog model is 10
Modern nomenclature is 10C

W3NLB

(c) 2005-2011 W3NLB
All Rights Reserved

Atwater Kent Model 10 (aka 10C) 4700
Schematic and Wiring Diagram

Drawn by: Leigh Bassett W3NLB
Date: 19 Feb 2011
FSCM NO
DWG NO AK04700SCH
REV C
SCALE
SHEET 1 OF 1