A. H. GREBE & CO.
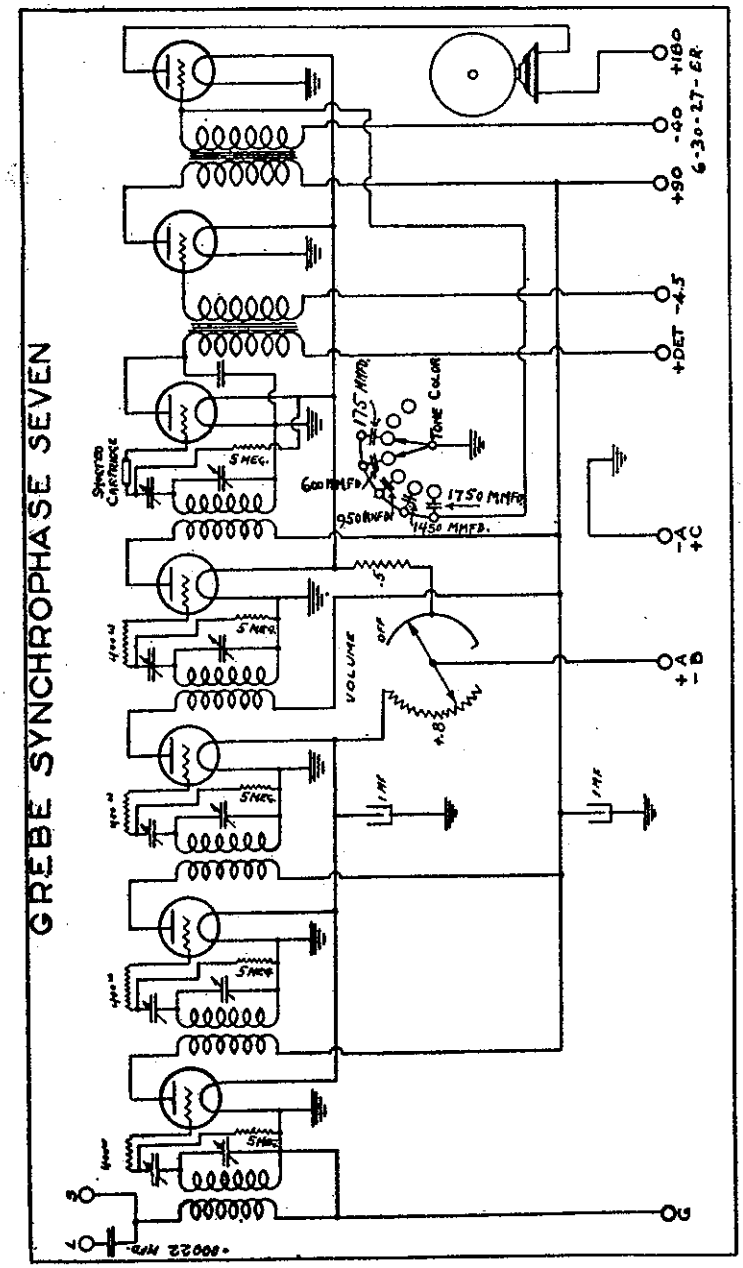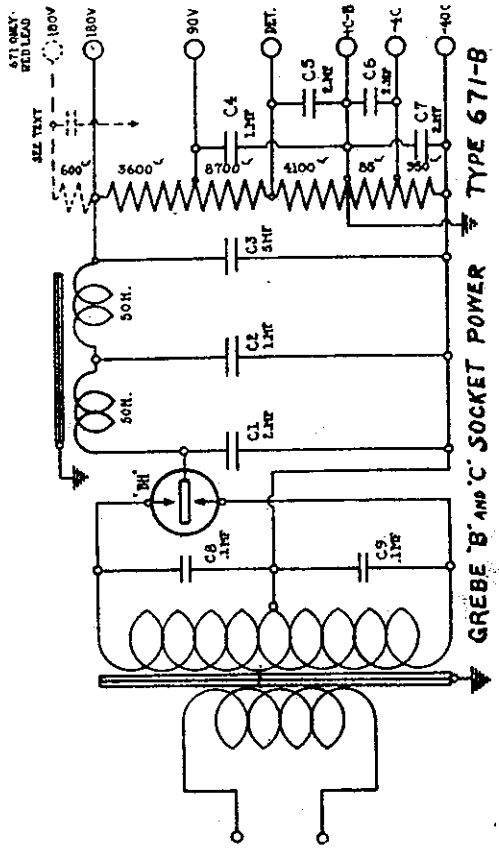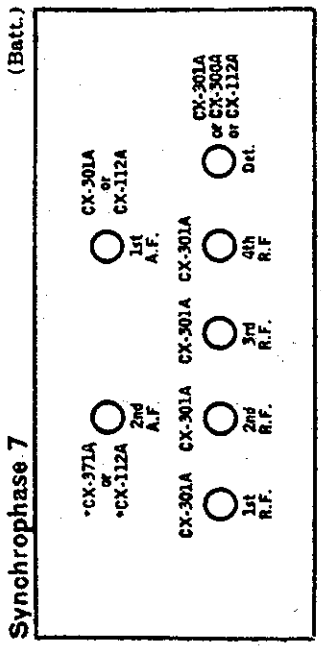
MODEL Synchrophase 7
Battery Type
Socket Power Unit 671-B