QTY	P/N	KIT
1	SA-93	STER KIT MERC PROMAX 3L/300 X
		PARTS INCLUDED
4	FA-6	ADAPTER -6 JIC SWIVEL 90° SS
2	BT-1	BULKHEAD TUBE ASSEMBLY -6 JIC STRAIGHT
2	SR-8-1-13	RAM ASSEMBLY (1” DIA ROD) (CLEVIS CENTERS CLOSED 17 1/8” OPEN 25 3/8”)
2	WP-11-LR	WING PLATE KIT MERC PROMAX 3L/300 X, 1 RAM 1 TIE BAR
2	TP-1	TILT PIN ASSEMBLY (FITS ALL MERC OUTBOARD MOTOR BRACKETS)
8	HO-3	HOSE END HP CRIMP 3/8” TO -6 JIC SS
		ADDITIONAL ITEMS NEEDED TO COMPLETE THIS KIT
_____”	HO-13	HOSE HP CRIMP 3/8” (TOTAL INCHES FROM CHART BELOW)
1	TB-6	TIE BAR ASSEMBLY 1 1/4” DIA X 18” WITH 3/4” ID CLEVIS’(MAX LENGTH 60”)
TBD	TB-2	TIE BAR PER INCH 1 1/4” SS
2	MP-13	CLEVIS STUD ASSEMBLY 3/4”
		OR
1	TB-27	TIE BAR ASSEMBLY 1 3/8” DIA X 18” LONG WITH 7/8” ID CLEVIS’ (MAX LENGTH 80”)
TBD	TB-3	TIE BAR PER INCH 1 3/8” SS
2	0229	CLEVIS STUD ASSEMBLY 7/8”

NOTE: WHEN ORDERING FOR A SHORT SHAFT MOTOR CHANGE THE RAM ASSEMBLY TO SR-8-1-15
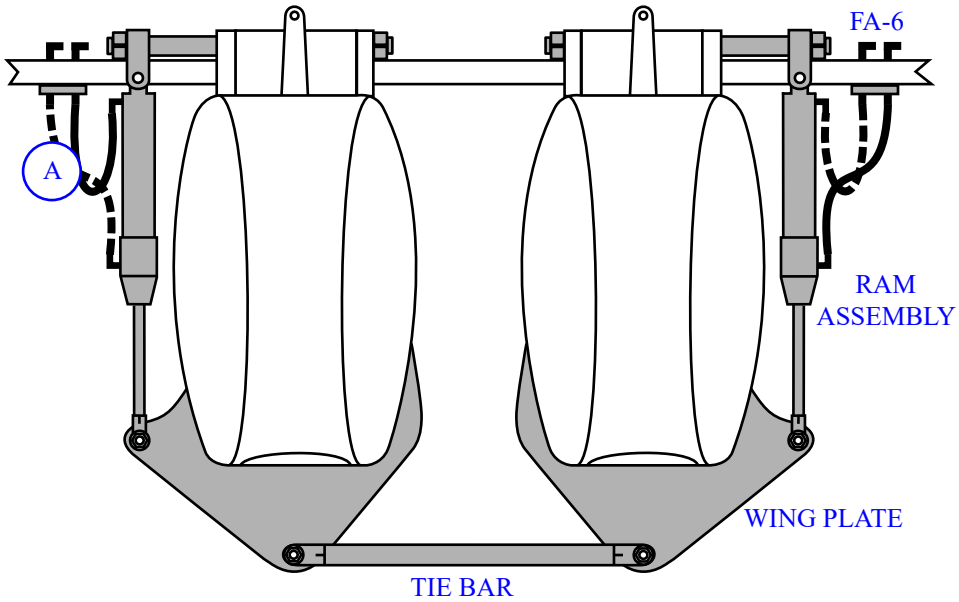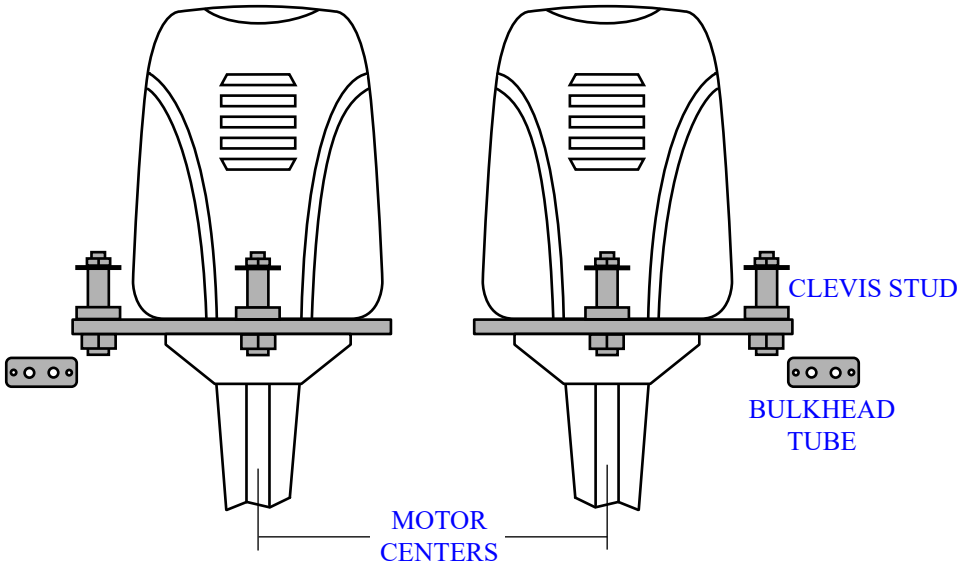
QTY	P/N	HOSE	LENGTH
4	HO-13	A	_____”