APD-ULJ80

UL2200 DIESEL

AKSA Power Generation has been producing industrial generator sets with an innovative compact design and excellence in quality for over 30 years. AKSA has been providing reliable power through three main production plants and over 15 branch offices worldwide.

General Characteristics

Model Name	APD-ULJ80
Engine Make	John Deere
Engine Model	4045HF285
Alternator Make	Stamford
Control Panel Make & Model	DSE 7320
Frequency & Speed	60Hz, 1800rpm
Enclosure Make & Model	AKSA AUL 41/42

Genset Rating

Engine	Alternator	Voltage	Standby Power	Power Factor	Standby Current
4045HF285	UCI224G (Wnd-311)	480 / 277V	80kW	0.8	120A
	UCI224G (Wnd-06)	240 / 120V, 1ph	75kW	1	312A
	UCI224G (Wnd-311)	208 / 120V	75kW	0.8	260A
	UCI224F (Wnd-17)	600 / 347V	75kW	0.8	90A
	UCI224G (Wnd-311)	240 / 120V	75kW	0.8	225.6A
	UCI274C (Wnd-311)	240 / 120V	80kW	0.8	240.9A

***EPA – Certified for Emergency Stationary Applications**

Stand-by Power (Maximum): Power available at variable load in the event of main power network failure. No over load is permitted.
Prime Power: Power available at variable load in lieu of a main power network. Overload of 10% is permitted for 1 hour in every 12 hours of operation.
The above ratings represent the engine performance capabilities to conditions specified in accordance with ISO 8528/5 & ISO3046.
Derating may be required for conditions outside of the test conditions.

Codes & Standards

The Generator set is designed and manufactured in a facility certified to **ISO9001** standards.

The Generator set is designed and manufactured in a facility certified to **ISO14001:2015** standards.

AKSA Power Generation provides **single source responsibility** for the generator set & accessories.

The generator set, with its components, are **prototype tested** and **production tested** according to the UL test program.

The generator set meets **NFPA70, 99, 110, 37** Level 1 when equipped with the necessary accessories and installed per NFPA standards.

*Manufacturer reserves the right to make changes in model, technical specifications, color, equipment and accessories without prior notice.

aksa POWER GENERATION

APD-ULJ80

UL2200 DIESEL

Engine Data

Manufacturer	John Deere
Model	4045HF485
Displacement & Cylinders	4.5 L / 4 Cylinders
Engine Type	In-line, 4 Cycle
Engine Speed	1800rpm
Engine Prime Power	86kW
Engine Standby Power	94kW
Aspiration	Turbocharged
Compression Ratio	19.0 : 1
Bore / Stroke	106 mm / 127 mm
Governor type	Electronic
Engine crankcase vent system	Open
Ratio, Air : Fuel	21 : 1
BMEP, Standby Power	1748 kPa
Friction Power	13kW
Designed / Calibrated to Meet	EPA Tier 3

Fuel System

ECU Description	L16 Control
Max. Fuel Inlet Temp.	176 ˚F
Total Fuel Flow	111 lb/hr

Fuel Consumption

Standby Power (100%)	6.60 gal/h
Standby Power (75%)	5.36 gal/h
Standby Power (50%)	3.95 gal/h
Standby Power (25%)	2.14 gal/h

Electric System

System Voltage	12V
Min Voltage at ECU during crank	6V
Battery Qty, Rating	1 x 60Ah

Cooling System

Radiator Cooling System Type	Closed Circuit
Radiator Ambient Temp	> 50 ˚C
Coolant Capacity, Engine Only	9 quart
Max Top Tank Temp	230 ˚F
Thermostat, Start – Fully Open	180– 203 ˚F

Exhaust System

Exhaust Temperature	1069˚F
Max Allowable Exhaust Restriction	7.5 kPa
Exhaust Gas Flow	651 ft.^{3}/min

Engine Air Flow	234 ft.^{3}/min
Max Intake Air Restriction (Clean Element)	3.75 kPa
Air Filter Type	Dry Paper Element

Lubrication System

Oil Pressure at Rated Speed	320 kPa
Oil Pressure at low idle	105 kPa
Max Oil Carryover in Blow-by	0.002 lb/hr
Max Crankcase Pressure	0.5 kPa

*Manufacturer reserves the right to make changes in model, technical specifications, color, equipment and accessories without prior notice.

aksa POWER GENERATION

APD-ULJ80

UL2200 DIESEL

Alternator Data

Manufacturer	Stamford
Standards	BS EN 60034
Control System	PMG
A.V.R.	MX341
Voltage Regulation	± 1 %
Insulation System	Class H
Protection	IP23
Rated Power Factor	0.8
Stator Winding	Double Layer Concentric
Winding Pitch	Two Thirds
Winding Leads	12
Telephone Interference	THF < 2 %
Waveform Distortion	No Load < 1.5 %
Maximum Over speed	2250 rev/min

Battery Charger & Electrical System Data

Manufacturer	ComAp
Model	InteliCharger
Input Voltage	85V ~ 264V AC
Output Voltage / Current	13.8V Float / 4A pk

Jacket Water Heater Data

Manufacturer	Hotstart
Model	TPS101GT10-000
Input Voltage	120V
Power	1000W

Controller Data

Manufacturer	DSE
Model	7320 MK II

Controller Features & Benefits

Microprocessor controlled, UL & NFPA110 Compatible

License free PC Software (Non-proprietary Software)

IP65 rating offers increased resistance to water ingress

Modules can be integrated to building management systems

Real time clock provides accurate event log

Four line back-lit LCD text display

Five key menu navigation, two wire start/stop at Auto mode

Front panel editing with PIN protection

Support up to three remote display modules

Configurable timers and alarms

Multiple date and timer scheduler

Integral PLC editor

'Protections disabled' feature

Load switching (load shedding and dummy load outputs)

Fully configurable via DSE Configuration Suite PC Software

SCADA monitoring via DSE Configuration Suite PC Software

Protection

- ✓ Gen. Voltage – under / over
- ✓ Gen. Freq. – under / over
- ✓ Engine Speed – under / over
- ✓ Engine Oil Pressure – low
- ✓ Engine Temp – low / high
- ✓ Battery Voltage – low / high
- ✓ Weak Battery
- ✓ Fail to Start / Stop
- ✓ Charge Alternator Fail
- ✓ Over Current & Load (kW/kVAr)
- ✓ Unbalanced Load
- ✓ Independent Earth Fault
- ✓ Reverse Power
- ✓ Loss of Speed Signal

Instruments

- ✓ Gen. Voltage (L-L/L-N)
- ✓ Gen. Frequency
- ✓ Engine speed
- ✓ Oil Pressure
- ✓ Water Temperature
- ✓ Battery Voltage
- ✓ Run Time
- ✓ Phase Sequence
- ✓ Power monitoring (kWh/kVAh/kVArh)
- ✓ Power (kWh/kVAh/kVArh)
- ✓ Power Factor
- ✓ Generator Current
- ✓ Generator Load (%)
- ✓ Earth Current

*Manufacturer reserves the right to make changes in model, technical specifications, color, equipment and accessories without prior notice.

aksa POWER GENERATION

APD-ULJ80

UL2200 DIESEL

Enclosure Features

- ✓ Heavy Duty Steel / Aluminum Structure
- ✓ E-Stop on Enclosure
- ✓ Control Panel Eliminated from Engine Vibrations
- ✓ Standard Sound Attenuation Foam
- ✓ Plastic Covered Corrosion Resistant Locks & Hinges

Enclosure Features

- ✓ Internally Mounted Exhaust System with Rain Cap
- ✓ Coolant Fill Cap
- ✓ Removable Base Frame Lifting Hooks
- ✓ Oil & Coolant Drain Ports
- ✓ Easy Access for Maintenance

Open Skid Gen		Level 1 Enclosure		Level 2 Enclosure	
Length	92.1 in	Length	116.5 in	Length	116.5 in
Width w/o lift hooks	43.3 in	Width w/o lift hooks	43.3 in	Width w/o lift hooks	43.3 in
Height	53.5 in	Height	66.3 in	Height	82 in
Dry Weight	2600 lb	Dry Weight	3800 lb	Dry Weight	4100 lb
		Sound Pressure @ 7 meters	70 dB(A)	Sound Pressure @ 7 meters	67 dB(A)

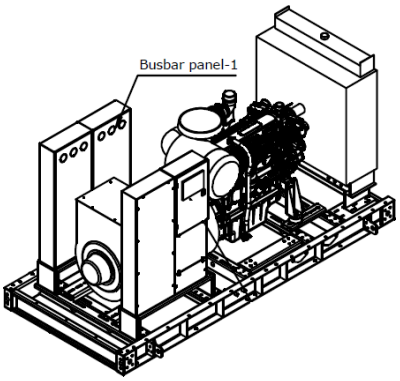

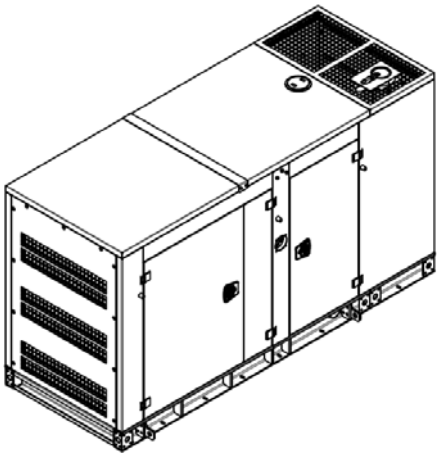

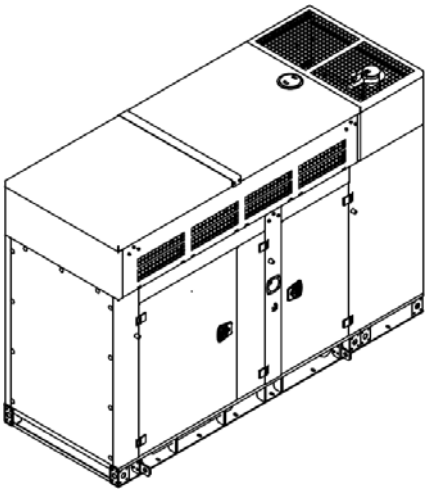

Fuel Tank - UL142 Listed Base Design

Size	24hr (160gal)	48hr (350gal)	72hr (485gal)
Dimensions (L/W/H) (in)	130 / 43.3 / 13.5	130 / 43.3 / 26	130 / 43.3 / 34
Weight (lb)	1190	1650	1930

*Manufacturer reserves the right to make changes in model, technical specifications, color, equipment and accessories without prior notice.

aksa POWER GENERATION

APD-ULJ80

UL2200 DIESEL

Standard Features & Accessories

- ✓ UL2200 Certification
- ✓ Heavy Duty Steel Base Frame
- ✓ PMG w/MX341 AVR
- ✓ Engine Jacket Water Heater
- ✓ Battery and Battery Rack
- ✓ Battery Charger
- ✓ Anti Vibration Pads between Engine/Alternator & Base Frame
- ✓ Critical Grade Silencer Inside Enclosure
- ✓ Residential Grade Silencer Set for Open Skid Sets
- ✓ Exhaust outlet rain cap and radiator fill cap
- ✓ Sound Absorb Foam Material for Enclosure
- ✓ Emergency Stop Button
- ✓ Oil Drain Valve
- ✓ Coolant Drain Valve
- ✓ Jacket Water Heater Isolation Valves
- ✓ Flex Fuel Lines
- ✓ Air Filter Restriction Gauge
- ✓ Engine Manifold Cover
- ✓ Turbocharger Cover
- ✓ Protection Covers for Rotating Parts
- ✓ Exhaust Insulation Cover
- ✓ Enclosure DC Light
- ✓ Operations Manual
- ✓ 24 Months / 2000 hours Limited Standby Warranty

Optional Accessories

- ❑ Main Line CB (3 / 4 Poles – 80% / 100% rated)
- ❑ Upsize Alternator
- ❑ Voltage Regulation ±0.5% w/MX321 AVR
- ❑ Anti-condensation Heater
- ❑ Sub Base Fuel Tank (UL142 / UL2085)
- ❑ Fuel Level Display & Alarm on Controller
- ❑ Low / High Fuel Alarms
- ❑ Fuel Water Separator Filter
- ❑ Auto Fuel Fill Control System
- ❑ Oil Temperature Display on Controller
- ❑ Manual Speed Adjust Rheostat
- ❑ Manual Voltage Adjust Rheostat
- ❑ Remote Annunciator Panel
- ❑ Remote Control & Monitoring Panel
- ❑ Advanced SMS Messaging
- ❑ Control Panel Heater
- ❑ Battery Disconnect Switch
- ❑ Battery Heater
- ❑ Battery Charger 10/20 Amp
- ❑ Shunt Trip / Aux Contacts
- ❑ Spring Anti-vibration Isolators
- ❑ Automatic Transfer Panel (ATS)
- ❑ 5 Years / 2000 hours Limited Comprehensive Warranty

AKSA POWER GENERATION USA LLC
371 Exchange Street, West Monroe,
Louisiana, 71292
Tel: 318.855.8377 Fax: 318.855.8381
E-mail: sales@aksausa.com
AKSA Power Generation USA is a member of
KAZANCI HOLDİNG

DISTRIBUTED BY:

*Manufacturer reserves the right to make changes in model, technical specifications, color, equipment and accessories without prior notice.