APD-NG425

UL2200 NG/LP

AKSA Power Generation has been producing industrial generator sets with an innovative compact design and excellence in quality for over 30 years. AKSA has been providing reliable power through three main production plants and over 15 branch offices worldwide.

General Characteristics

Model Name	APD-NG425
Engine Make	PSI (Doosan)
Engine Model	21.9L
Alternator Make	Stamford
Control Panel Make & Model	DSE 7320
Frequency & Speed	60Hz, 1800rpm
Enclosure Make & Model	AKSA AUL 71A/72A

Genset Rating

Engine	Alternator	Voltage	PF	NG Standby Power	NG Standby Current	LP Gas Standby Power	LP Gas Standby Current
21.9L	HCI544C (Wnd-311)	480/277V	0.8	425kW	639A	300kW	451A
	HCI544C (Wnd-311)	240/120V	0.8	420kW	1264A	300kW	902A
	HCI544C (Wnd-311)	208/120V	0.8	420kW	1458A	300kW	1040A
	HCI544C (Wnd-17)	600/347V	0.8	425kW	511A	300kW	361A

***EPA – Certified for Emergency Stationary Applications**

Stand-by Power (Maximum): Power available at variable load in the event of main power network failure. No over load is permitted.
Prime Power: Power available at variable load in lieu of a main power network. Overload of 10% is permitted for 1 hour in every 12 hours of operation.
The above ratings represent the engine performance capabilities to conditions specified in accordance with ISO 8528/5 & ISO3046.
Derating may be required for conditions outside of the test conditions.

Codes & Standards

The Generator set is designed and manufactured in a facility certified to **ISO9001** standards.

The Generator set is designed and manufactured in a facility certified to **ISO14001:2015** standards.

AKSA Power Generation provides **single source responsibility** for the generator set & accessories.

The generator set, with its components, are **prototype tested** and **production tested** according to the UL test program.

The generator set meets **NFPA70, 99, 110, 37** Level 1 when equipped with the necessary accessories and installed per NFPA standards. *Engine must be equipped with a fast start kit for NFPA110 Level 1 applications.

*Manufacturer reserves the right to make changes in model, technical specifications, color, equipment and accessories without prior notice.

Engine Data

Manufacturer	PSI
Model	21.9L
Displacement & Cylinders	21.9 L / 12 Cylinders
Engine Type	V-type, 4 Cycle
Engine Speed	1800rpm
Engine Standby Power NG	510 kWm
Engine Standby Power LP	352kWm
Aspiration	Turbo Charge Air Cooled
Compression Ratio	10.5 : 1
Bore / Stroke	128 mm / 142 mm
Governor type	Electronic

Fuel System

Fuel Type	NG, LP Gas/Dual Fuel
NG Supply pipe size	2x2.0" NPTF
Maximum EPR Rated Pressure	6.9 kPa / 1.0 psi
Recommended Max Pressure	2.7 kPA / 11.0 inH2O
Recommended Min Pressure	1.7 kPA / 7.0 inH2O
Max LPG vapor Pressure to EPR	2.7 kPA / 11.0 inH2O

Fuel Consumption

	Natural Gas	LP Gas
Standby Power (100%)	5375 ft^3/h 152 m^3/h	44 gal/h 166 L/h

Electric System

System Voltage (dc)	24V
Battery Qty, Rating	2 x 120Ah

Cooling System

Radiator Cooling System Type	Closed Circuit
Coolant Capacity	51 gal
Cranking Temperature	160°F
Full Open Temperature	185 °F

Exhaust System

Type	Water cooled manifold
Max. allowable back pressure	10.2 kPa
Max Turbine Outlet Temperature	1136 °F
Exhaust Gas Flow at Turbine Outlet Temperature	2821 cfm

Air Intake System

Combustion Air Required	829 cfm
Max Intake Air Restriction (Clean Element)	1.2 kPa / 5 inH2O
Air Filter Type	Dry Paper Element

Lubrication System

Oil Specifications	SAE 15W-40 Low Ash Gas Engine oil, API CD/CF or higher
Oil Capacity, Min-Max	35 – 42.4 Qts
Oil filter; qt, type	2, Cartridge
Min – Max Oil Pressure @1000rpm (Idle)	13 psi – 44 psi 0.9 bar – 3 bar

*Manufacturer reserves the right to make changes in model, technical specifications, color, equipment and accessories without prior notice.

Alternator Data

Manufacturer	Stamford
Standards	BS EN 60034
Control System	PMG
A.V.R.	MX341
Voltage Regulation	± 1 %
Insulation System	Class H
Protection	IP23
Rated Power Factor	0.8
Stator Winding	Double Layer Concentric
Winding Pitch	Two Thirds
Winding Leads	12
Telephone Interference	THF < 2 %
Waveform Distortion	No Load < 1.5 %
Maximum Over speed	2250 rev/min

Battery Charger & Electrical System Data

Manufacturer	ComAp
Model	InteliCharger
Input Voltage	85V ~ 264V AC
Output Voltage / Current	13.8V Float / 4A pk

Jacket Water Heater Data

Manufacturer	Hotstart
Model	CKM1030260-000
Input Voltage	240V
Power	3000W

Controller Data

Manufacturer	DSE
Model	7320 MK II

Controller Features & Benefits

Microprocessor controlled, UL & NFPA110 Compatible

License free PC Software (Non-proprietary Software)

IP65 rating offers increased resistance to water ingress

Modules can be integrated to building management systems

Real time clock provides accurate event log

Four line back-lit LCD text display

Five key menu navigation, two wire start/stop at Auto mode

Front panel editing with PIN protection

Support up to three remote display modules

Configurable timers and alarms

Multiple date and timer scheduler

Integral PLC editor

'Protections disabled' feature

Load switching (load shedding and dummy load outputs)

Fully configurable via DSE Configuration Suite PC Software

SCADA monitoring via DSE Configuration Suite PC Software

Protection	Instruments
✓ Gen. Voltage – under / over	✓ Gen. Voltage (L-L/L-N)
✓ Gen. Freq. – under / over	✓ Gen. Frequency
✓ Engine Speed – under / over	✓ Engine speed
✓ Engine Oil Pressure – low	✓ Oil Pressure
✓ Engine Temp – low / high	✓ Water Temperature
✓ Battery Voltage – low / high	✓ Battery Voltage
✓ Weak Battery	✓ Run Time
✓ Fail to Start / Stop	✓ Phase Sequence
✓ Charge Alternator Fail	✓ Power monitoring (kWh/kVAh/kVArh)
✓ Over Current & Load (kW/kVAr)	✓ Power (kWh/kVAh/kVArh)
✓ Unbalanced Load	✓ Power Factor
✓ Independent Earth Fault	✓ Generator Current
✓ Reverse Power	✓ Generator Load (%)
✓ Loss of Speed Signal	✓ Earth Current

*Manufacturer reserves the right to make changes in model, technical specifications, color, equipment and accessories without prior notice.

Enclosure Features

- ✓ Heavy Duty Steel / Aluminum Structure
- ✓ E-Stop on Enclosure
- ✓ Control Panel Eliminated from Engine Vibrations
- ✓ Standard Sound Attenuation Foam
- ✓ Plastic Covered Corrosion Resistant Locks & Hinges

Enclosure Features

- ✓ Internally Mounted Exhaust System with Rain Cap
- ✓ Coolant Fill Cap
- ✓ Removable Base Frame Lifting Hooks
- ✓ Oil & Coolant Drain Ports
- ✓ Easy Access for Maintenance

Open Skid Gen-Set Dimensions

Length	158 in
Width w/o lift hooks	83 in
Height	87 in
Dry Weight	11500 lb

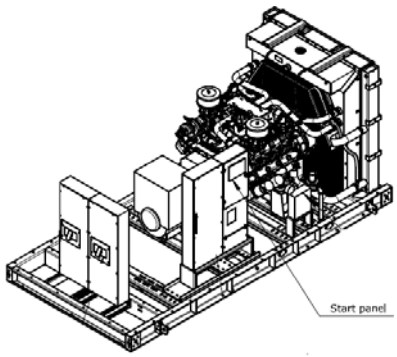

Enclosed Gen-Set Dimensions – Level 1

Length	206 in
Width w/o lift hooks	86 in
Height	101 in
Dry Weight	15000 lb
Sound Pressure @ 7 meters	80 dBA

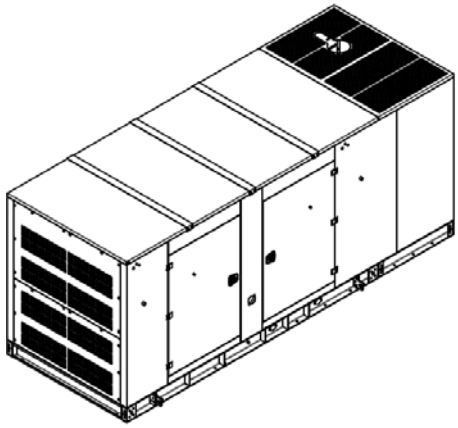

Enclosed Gen-Set Dimensions – Level 2

Length	224.6 in
Width w/o lift hooks	86 in
Height	101 in
Dry Weight	15500 lb
Sound Pressure @ 7 meters	77 dBA

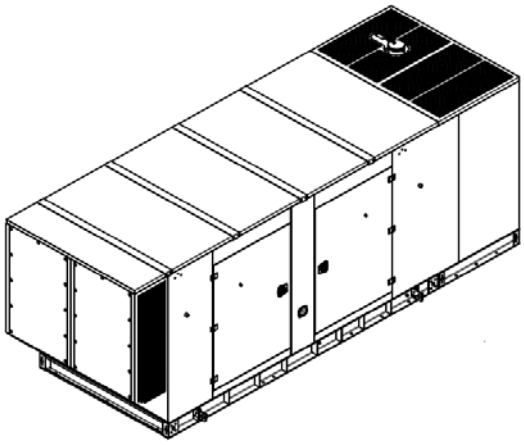

*Manufacturer reserves the right to make changes in model, technical specifications, color, equipment and accessories without prior notice.

aksa POWER GENERATION

APD-NG425

UL2200 NG/LP

Standard Features & Accessories

- ✓ UL2200 Certification
- ✓ Heavy Duty Steel Base Frame
- ✓ PMG
- ✓ Engine Jacket Water Heater
- ✓ Battery and Battery Rack
- ✓ Battery Charger
- ✓ Anti Vibration Pads between Engine/Alternator & Base Frame
- ✓ Critical Grade Silencer Inside Enclosure
- ✓ Residential Grade Silencer Set for Open Skid Sets
- ✓ Exhaust outlet rain cap and radiator fill cap
- ✓ Sound Absorb Foam Material for Enclosure
- ✓ Emergency Stop Button
- ✓ Oil Drain Valve
- ✓ Coolant Drain Valve
- ✓ Jacket Water Heater Isolation Valves
- ✓ Flex Fuel Lines
- ✓ Secondary Lock-off Valve on Baseframe
- ✓ Engine Manifold Cover
- ✓ Turbocharger Cover
- ✓ Protection Covers for Rotating Parts
- ✓ Exhaust Insulation Cover
- ✓ Enclosure DC Light
- ✓ Operations Manual
- ✓ 24 Months / 2000 hours Limited Standby Warranty

Optional Accessories

- ❑ Main Line CB (3 / 4 Poles – 80% / 100% rated)
- ❑ Upsize Alternator
- ❑ Anti-condensation Heater
- ❑ Voltage Regulation ±0.5% w/MX321 AVR
- ❑ Gas Regulator
- ❑ NG / LP Auto Changeover Control System
- ❑ Low Gas Pressure Alarm
- ❑ Low Coolant Level Alarm
- ❑ Oil Pan Heater
- ❑ Oil Temperature Display on Controller
- ❑ Manual Speed Adjust Rheostat
- ❑ Manual Voltage Adjust Rheostat
- ❑ Remote Annunciator Panel
- ❑ Remote Control & Monitoring Panel
- ❑ Advanced SMS Messaging
- ❑ Control Panel Heater
- ❑ Battery Disconnect Switch
- ❑ Battery Heater
- ❑ Battery Charger 10/20 Amp
- ❑ Shunt Trip / Aux Contacts
- ❑ Spring Anti-vibration Isolators
- ❑ Automatic Transfer Panel (ATS)
- ❑ 5 Years / 2000 hours Limited Comprehensive Warranty

AKSA POWER GENERATION USA LLC
371 Exchange Street, West Monroe,
Louisiana, 71292
Tel: 318.855.8377 Fax: 318.855.8381
E-mail: sales@aksausa.com
AKSA Power Generation USA is a member of
KAZANCI HOLDİNG

DISTRIBUTED BY:

*Manufacturer reserves the right to make changes in model, technical specifications, color, equipment and accessories without prior notice.