APD-NG40

UL2200 NG/LP

AKSA Power Generation has been producing industrial generator sets with an innovative compact design and excellence in quality for over 30 years. AKSA has been providing reliable power through three main production plants and over 15 branch offices worldwide.

General Characteristics

Model Name	APD-NG40
Engine Make	PSI
Engine Model	4.3L
Alternator Make	Stamford
Control Panel Make & Model	DSE 7320
Frequency & Speed	60Hz, 1800rpm
Enclosure Make & Model	AKSA AUL 31/32

Genset Rating

Engine	Alternator	Voltage	PF	NG Standby Power	NG Standby Current	LP Gas Standby Power	LP Gas Standby Current
PSI 4.3L	UCI224D (Wnd-311)	480/277V	0.8	40kW	60A	40kW	60A
	UCI224D (Wnd-311)	240/120V,1ph	1	37kW	155A	40kW	166A
	UCI224D (Wnd-311)	208/120V	0.8	40kW	138A	40kW	138A
	PI144J (Wnd-17)	600/347V	0.8	40kW	48A	40kW	48A
	UCI224D (Wnd-311)	240/120V	0.8	40kW	120.3A	40kW	120.3A

***EPA – Certified for Emergency Stationary Applications**

Stand-by Power (Maximum): Power available at variable load in the event of main power network failure. No over load is permitted.
Prime Power: Power available at variable load in lieu of a main power network. Overload of 10% is permitted for 1 hour in every 12 hours of operation.
The above ratings represent the engine performance capabilities to conditions specified in accordance with ISO 8528/5 & ISO3046.
Derating may be required for conditions outside of the test conditions.

Codes & Standards

The Generator set is designed and manufactured in a facility certified to **ISO9001** standards.

The Generator set is designed and manufactured in a facility certified to **ISO14001:2015** standards.

AKSA Power Generation provides **single source responsibility** for the generator set & accessories.

The generator set, with its components, are **prototype tested** and **production tested** according to the UL test program.

The generator set meets **NFPA70, 99, 110, 37** Level 1 when equipped with the necessary accessories and installed per NFPA standards. *Engine must be equipped with a fast start kit for NFPA110 Level 1 applications.

*Manufacturer reserves the right to make changes in model, technical specifications, color, equipment and accessories without prior notice.

aksa POWER GENERATION

APD-NG40

UL2200 NG/LP

Engine Data

Manufacturer	PSI
Model	4.3L
Displacement & Cylinders	4.3L / 6 Cylinders
Engine Type	V-type, 4 Cycle
Engine Speed	1800rpm
Engine Standby Power NG	58.18 kW
Engine Standby Power LP	61.27 kW
Aspiration	Naturally Aspired
Compression Ratio	9.4 : 1
Bore / Stroke	101.6 mm / 88 mm
Governor type	Electronic

Fuel System

Fuel Type	NG, LP Gas/Dual Fuel
Min NG Supply pipe size	1-1/4" NPTF
Min LPG Supply pipe size	¾"
Maximum EPR Rated Pressure	6.9 kPa / 1.0 psi
Max Pressure to EPR	2.7 kPA / 11.0 inH2O
Min Pressure to EPR	1.7 kPA / 7.0 inH2O

Fuel Consumption

	Natural Gas	LP Gas
Standby Power (100%)	600 cfh 17.0 m³/hr	245 cfh 6.9 m³/hr
Standby Power (75%)	500 cfh 14.1 m³/hr	200 cfh 5.7 m³/hr
Standby Power (50%)	380 cfh 10.7 m³/hr	150 cfh 4.2 m³/hr
Standby Power (25%)	250 cfh 7.1 m³/hr	100 cfh 2.9 m³/hr

Electric System

System Voltage (dc)	12V
Battery Qty, Rating	1 x 54Ah

Cooling System

Radiator Cooling System Type	Closed Circuit
Coolant Capacity, engine only	7.75 quart
Cranking Temperature	160˚F
Full Open Temperature	185 ˚F

Type	Air cooled manifold
Max. allowable back pressure	10.2 kPa
Cont. rating catalyst configuration	No Catalyst
Exhaust Gas Flow at Rated Power @ 1350 ˚F	361.9 cfm

Air Intake System

Combustion Air Required	112.1 cfm
Max Intake Air Restriction (Clean Element)	1.49 kPa / 3 inH2O
Air Filter Type	Dry Paper Element

Lubrication System

Oil Specifications	SAE 5W-30 API Rating SM or Newer
Oil Pan Capacity	4.5 Qts
Oil filter; qt, type	1, Cartridge
Max allowable oil temp	250˚F

*Manufacturer reserves the right to make changes in model, technical specifications, color, equipment and accessories without prior notice.

aksa POWER GENERATION

APD-NG40

UL2200 NG/LP

Alternator Data

Manufacturer	Stamford
Standards	BS EN 60034
Control System	PMG
A.V.R.	MX341
Voltage Regulation	± 1 %
Insulation System	Class H
Protection	IP23
Rated Power Factor	0.8
Stator Winding	Double Layer Concentric
Winding Pitch	Two Thirds
Winding Leads	12
Telephone Interference	THF < 2 %
Waveform Distortion	No Load < 1.5 %
Maximum Over speed	2250 rev/min

Battery Charger & Electrical System Data

Manufacturer	ComAp
Model	InteliCharger
Input Voltage	85V ~ 264V AC
Output Voltage / Current	13.8V Float / 4A pk

Jacket Water Heater Data

Manufacturer	Hotstart
Model	TPS101GT10-000
Input Voltage	120V
Power	1000W

Controller Data

Manufacturer	DSE
Model	7320 MK II

Controller Features & Benefits

Microprocessor controlled, UL & NFPA110 Compatible

License free PC Software (Non-proprietary Software)

IP65 rating offers increased resistance to water ingress

Modules can be integrated to building management systems

Real time clock provides accurate event log

Four line back-lit LCD text display

Five key menu navigation, two wire start/stop at Auto mode

Front panel editing with PIN protection

Support up to three remote display modules

Configurable timers and alarms

Multiple date and timer scheduler

Integral PLC editor

'Protections disabled' feature

Load switching (load shedding and dummy load outputs)

Fully configurable via DSE Configuration Suite PC Software

SCADA monitoring via DSE Configuration Suite PC Software

Protection

- ✓ Gen. Voltage – under / over
- ✓ Gen. Freq. – under / over
- ✓ Engine Speed – under / over
- ✓ Engine Oil Pressure – low
- ✓ Engine Temp – low / high
- ✓ Battery Voltage – low / high
- ✓ Weak Battery
- ✓ Fail to Start / Stop
- ✓ Charge Alternator Fail
- ✓ Over Current & Load (kW/kVAr)
- ✓ Unbalanced Load
- ✓ Independent Earth Fault
- ✓ Reverse Power
- ✓ Loss of Speed Signal

Instruments

- ✓ Gen. Voltage (L-L/L-N)
- ✓ Gen. Frequency
- ✓ Engine speed
- ✓ Oil Pressure
- ✓ Water Temperature
- ✓ Battery Voltage
- ✓ Run Time
- ✓ Phase Sequence
- ✓ Power monitoring (kWh/kVAh/kVArh)
- ✓ Power (kWh/kVAh/kVArh)
- ✓ Power Factor
- ✓ Generator Current
- ✓ Generator Load (%)
- ✓ Earth Current

*Manufacturer reserves the right to make changes in model, technical specifications, color, equipment and accessories without prior notice.

Enclosure Features

- ✓ Heavy Duty Steel / Aluminum Structure
- ✓ E-Stop on Enclosure
- ✓ Control Panel Eliminated from Engine Vibrations
- ✓ Standard Sound Attenuation Foam
- ✓ Plastic Covered Corrosion Resistant Locks & Hinges

Enclosure Features

- ✓ Internally Mounted Exhaust System with Rain Cap
- ✓ Coolant Fill Cap
- ✓ Removable Base Frame Lifting Hooks
- ✓ Oil & Coolant Drain Ports
- ✓ Easy Access for Maintenance

Open Skid Gen-Set Dimensions

Length	72 in
Width w/o lift hooks	39 in
Height	38 in
Dry Weight	1600 lb

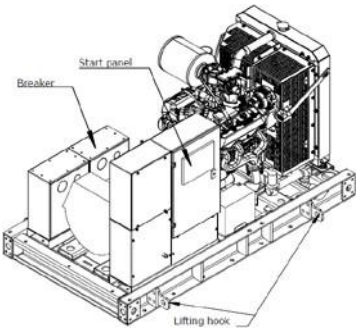

Enclosed Gen-Set Dimensions – Level 1

Length	89 in
Width w/o lift hooks	39 in
Height	56 in
Dry Weight	2300 lb
Sound Pressure @ 7 meters	69 dBA

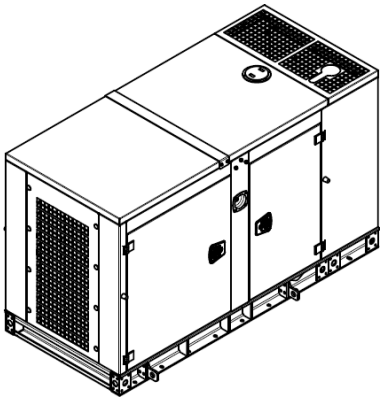

Enclosed Gen-Set Dimensions – Level 2

Length	89 in
Width w/o lift hooks	39 in
Height	69 in
Dry Weight	2600 lb
Sound Pressure @ 7 meters	65 dBA

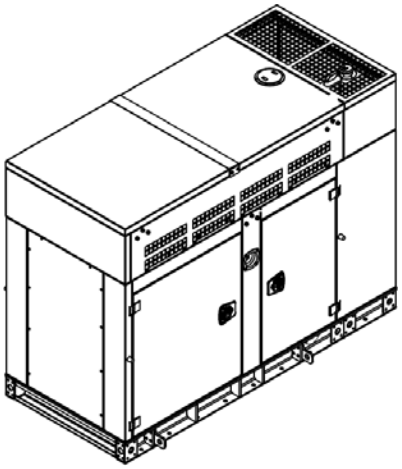

*Manufacturer reserves the right to make changes in model, technical specifications, color, equipment and accessories without prior notice.

aksa POWER GENERATION

APD-NG40

UL2200 NG/LP

Standard Features & Accessories

- ✓ UL2200 Certification
- ✓ Heavy Duty Steel Base Frame
- ✓ PMG
- ✓ Engine Jacket Water Heater
- ✓ Battery and Battery Rack
- ✓ Battery Charger
- ✓ Anti Vibration Pads between Engine/Alternator & Base Frame
- ✓ Critical Grade Silencer Inside Enclosure
- ✓ Residential Grade Silencer Set for Open Skid Sets
- ✓ Exhaust outlet rain cap and radiator fill cap
- ✓ Sound Absorb Foam Material for Enclosure
- ✓ Emergency Stop Button
- ✓ Oil Drain Valve
- ✓ Coolant Drain Valve
- ✓ Jacket Water Heater Isolation Valves
- ✓ Flex Fuel Lines
- ✓ Secondary Lock-off Valve on Baseframe
- ✓ Engine Manifold Cover
- ✓ Turbocharger Cover
- ✓ Protection Covers for Rotating Parts
- ✓ Exhaust Insulation Cover
- ✓ Enclosure DC Light
- ✓ Operations Manual
- ✓ 24 Months / 2000 hours Limited Standby Warranty

Optional Accessories

- ❑ Main Line CB (3 / 4 Poles – 80% / 100% rated)
- ❑ Upsize Alternator
- ❑ Anti-condensation Heater
- ❑ Voltage Regulation ±0.5% w/MX321 AVR
- ❑ Gas Regulator
- ❑ NG / LP Auto Changeover Control System
- ❑ Low Gas Pressure Alarm
- ❑ Low Coolant Level Alarm
- ❑ Oil Pan Heater
- ❑ Oil Temperature Display on Controller
- ❑ Manual Speed Adjust Rheostat
- ❑ Manual Voltage Adjust Rheostat
- ❑ Remote Annunciator Panel
- ❑ Remote Control & Monitoring Panel
- ❑ Advanced SMS Messaging
- ❑ Control Panel Heater
- ❑ Battery Disconnect Switch
- ❑ Battery Heater
- ❑ Battery Charger 10/20 Amp
- ❑ Shunt Trip / Aux Contacts
- ❑ Spring Anti-vibration Isolators
- ❑ Automatic Transfer Panel (ATS)
- ❑ 5 Years / 2000 hours Limited Comprehensive Warranty

AKSA POWER GENERATION USA LLC
371 Exchange Street, West Monroe,
Louisiana, 71292
Tel: 318.855.8377 Fax: 318.855.8381
E-mail: sales@aksausa.com
AKSA Power Generation USA is a member of
KAZANCI HOLDİNG

DISTRIBUTED BY:

*Manufacturer reserves the right to make changes in model, technical specifications, color, equipment and accessories without prior notice.