U.S. Patent
No. 7,779,581

Proudly Made in
the U.S.A.

ADA SOLUTIONS, INC.

DETECTABLE WARNING SURFACES FOR PEDESTRIAN CROSSINGS

Service, Delivery and Price
Make ADA Solutions, Inc. the Obvious Choice

WWW.ADATILE.COM • 800-372-0519

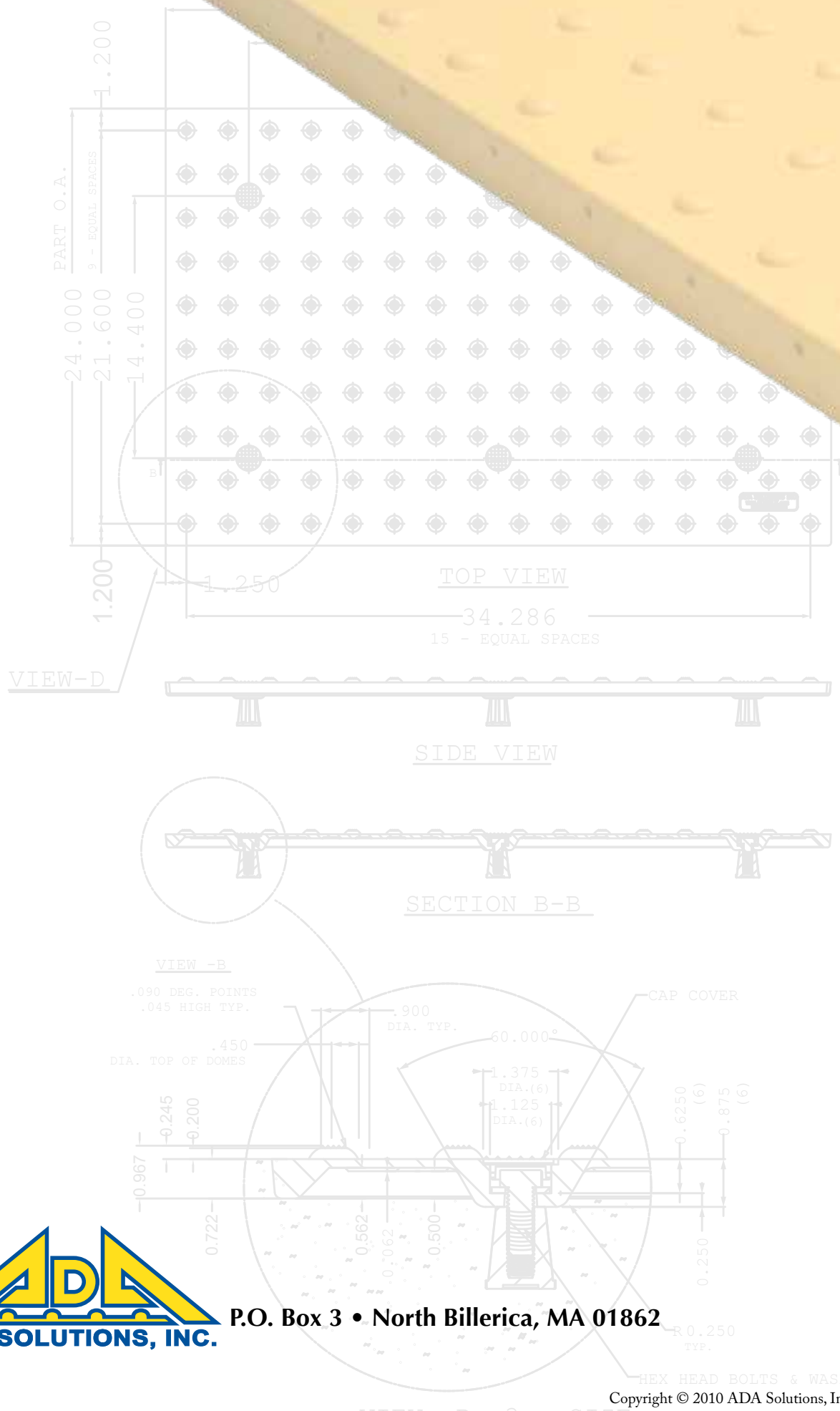

ADA SOLUTIONS, INC.
P.O. Box 3 • North Billerica, MA 01862

Copyright © 2010 ADA Solutions, Inc. All rights reserved.

ADA SOLUTIONS, INC.

Composite Detectable Warning Surfaces for Pedestrian Crossings

Cast-In-Place Replaceable
Radius Replaceable (WET-SET)
Radius Surface Mount
Surface Mount (Retrofit)
Cast–In–Place (WET-SET)

ADA Products Feature:

Cost Effective, Readily Available, and Easy to Install

ADAAG/PROW/CA Title 24 Compliant

– Pleasing architectural quality appearance and high performance product with geometry strictly compliant with all applicable codes.
– Approved for use by all major municipalities, DPW's and state DOT's.

Superior Wear Resistance

– Wear resistance properties far superior to that achieved with concrete based materials of any type.
– ADA's product will conform to irregular underlying substrates.
– Eliminates hairline cracking observed in epoxy based and VPC (Vitrified Polymer Composite) based materials.

Maintenance

– Virtually impervious to absorption (key indicator of durability) when compared to concrete, epoxy, or VPC materials. Not affected by chemical exposure.
– Performs well when subjected to snow removal operations.
– Easy to clean and replace when necessary.

Homogenous Materials allow for Superior Color Stability

– Pigment is uniformly distributed throughout the thickness of our products.
– Long term color stability without the need for secondary coatings.

Product Availability

– Immediate delivery
– National distribution

Proudly Made in the U.S.A.

We offer unmatched selection, service, delivery and price, with a strong focus on customer satisfaction. ADA Solutions, Inc. is leading the way in the detectable warning marketplace. Use us once and you'll see why so many companies across the country choose ADA Solutions, Inc.

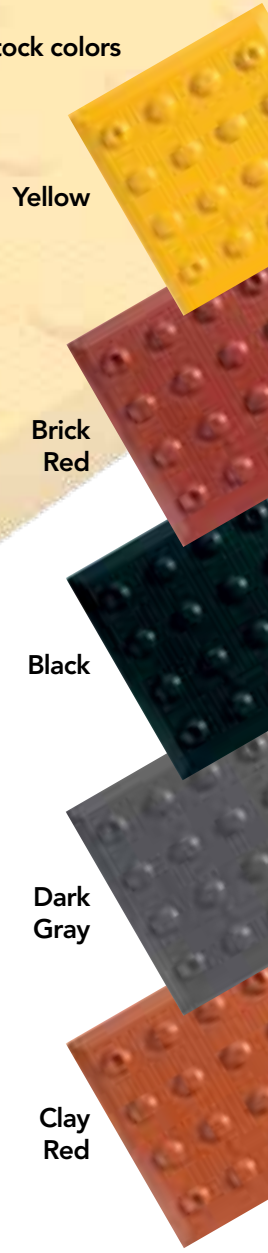

Light Reflectance Values
ADA's Composite TWS Product Line Federal Color Standards (595B)

	Color	Description	LRV
1.	Federal Yellow	#33538 (lusterless)	43.8
2.	Brick Red	#20109 (lusterless)	7.3
3.	Black	#37038 (lusterless)	2.5
4.	Dark Gray	#36118 (lusterless)	2.5
5.	Clay Red	#22144 (lusterless)	7.8
6.	Safety Red	#31350 (lusterless)	8.6

AVAILABLE SIZES & COLORS

		Dome Spacing	Yellow	Brick Red	Dark Gray	Black	Clay Red
REPLACEABLE	2' x 3'	2.35"	✓	✓	✓	✓	✓
	2' x 4'	2.35"	✓	✓	✓	✓	✓
	2' x 5'	2.35"	✓	✓	✓	✓	✓
	3' x 4'	2.35"	✓	✓	✓	✓	
	3' x 5'	2.35"	✓	✓	✓	✓	
RADIUS REPLACEABLE	2′ x 33¼″	Varies	✓	✓	✓	✓	✓
RADIUS SURFACE MOUNT	2′ x 33¼″ (16)	Varies	✓	✓	✓	✓	✓
SURFACE MOUNT	2' x 3' Fasteners/tile> (12)	1.67"	✓	✓	✓	✓	✓
		2.35"	✓	✓	✓	✓	✓
	2' x 4' (15)	1.67"	✓	✓	✓	✓	✓
		2.35"	✓	✓	✓	✓	✓
	2' x 5' (18)	1.67"	✓	✓	✓	✓	✓
		2.35"	✓	✓	✓	✓	✓
	3' x 4' (20)	1.67"	✓	✓	✓	✓	
	3' x 5' (24)	1.67"	✓	✓	✓	✓	
CAST-IN-PLACE	2' x 3'	1.67"	✓	✓	✓	✓	✓
		2.35"	✓	✓	✓	✓	✓
	2' x 4'	1.67"	✓	✓	✓	✓	✓
		2.35"	✓	✓	✓	✓	✓
	2' x 5'	1.67"	✓	✓	✓	✓	✓
		2.35"	✓	✓	✓	✓	✓
	3' x 4'	1.67"	✓	✓	✓	✓	
	3' x 5'	1.67"	✓	✓	✓	✓	

USE OF CHEM LINK M-1® ADHESIVE/SEALANT TO INSTALL ADA TACTILE WARNING SURFACE & WAYFINDING PANELS

Chem Link®
Advanced Architectural Products

ADA Solutions, Inc. offers the most complete and cost effective composite tactile warning surface (TWS) and wayfinding product line in the industry. ADA the North American market share leader. ADA offers Surface Applied (SA) TWS Panels to meet your project requirements. ADA's TWS products offer outstanding long-term performance, are slip resistant, offer superior long-term color stability, and can be installed with a minimum of effort under a wide variety of conditions. ADA's products comply with ADAAG, PROW, and CATitle 24 requirements. ADA recommends the use of Chem Link M-1® Adhesive/Sealant and/or urethane adhesives for installation of its tactile warning surface and wayfinding products.

TYPICAL PHYSICAL PROPERTIES

V.O.C. Compliant	Less than 20 grams/liter
Color	White, Gray
Weight	11.7 lbs per gallon
Hardness	45+3 Shore A Type
Flash Point	N/A
Sheer Strength	400 PSI
Elongation	400-550%
Low Temp Flex	-10° F
Cure Time	24 hours
Service Temperature	
Normal Use	-40° F to 200° F
Continuous Immersion	120° F

Green Standards:

- LEED 2.2 for New Construction and Major Renovations: Low Emitting Materials (Section 4.1) 1 Point
- NAHB Model Green Home Building Guidelines: 5 Global Impact Points
- VOC Content at 240° F: less than 20 grams/liter (including water), ASTM D2369, EPA Method 24

Adhesive Information

	Part #	Description	Coverage/Yield
	ADH10OZ	10oz Caulking Tube	Up to 10 sq ft
	ADH5GAL	5 Gallon Pail	Approx. 250 sq ft

Cast-In-Place (wet-set) Replaceable Tactile

Proudly Made in
the U.S.A.
U.S. Patent
No. 7,779,581

Cast-In-Place Replaceable Tactile

Installation Procedure

Be sure to read and understand <u>all</u> of these instructions <u>before</u> you begin.

A. The physical characteristics of the concrete shall be as specified in the contract documents while maintaining a slump range of 4-7 inches to permit the solid placement of the ADA Cast-In-Place Replaceable Tactile Unit (ADAREP) in the wet cement.

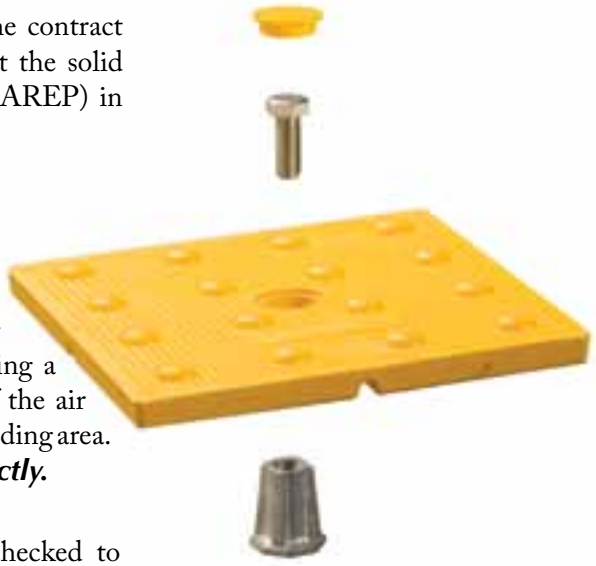

B. The concrete shall be poured and finished level, true and smooth to the required dimensions prior to the placement of the ADAREP unit.

C. Place the ADAREP unit 6-8 inches from the curb line. Working in a grid pattern, tamp the ADAREP unit into the wet concrete using a rubber mallet and a piece of wood. Continue this process until all of the air has been released, and the ADAREP unit surface is flush with the surrounding area. ***IMPORTANT: Avoid striking the surface of the ADAREP unit directly.***

D. Following the placement, the ADAREP unit elevation should be checked to the adjacent surface with a straight edge. The ADAREP unit elevation should be consistent with the Contract Drawings and Specifications. Any required adjustments must be made prior to the time when the concrete begins to set.

E. ***IMPORTANT NOTICE TO INSTALLER:*** *To allow for expansion and contraction, after tile is installed, use a 1/4" finish edge trowel around entire perimeter. On a continuous run, be sure to space each unit 1/8" apart.*

F. When you are confident that the ADAREP unit is in place and no further adjustments are needed, place a cinder block on both ends to hold the ADAREP unit in place while the concrete sets.

G. During and after the ADAREP unit installation, as well as the concrete curing stage, no walking or external forces can be placed on the ADAREP unit. The area must be protected from pedestrian traffic until concrete is cured. The ADAREP Warning Surface will be ready for pedestrian traffic within 2-4 hours.

H. Be sure to remove plastic protective covering from the face of the ADAREP unit once the concrete is cured.

***Not recommended or warrantied for asphalt installation.**

PRODUCT SIZES
2′x3′ 2′x4′ 2′x5′
3′x4′ 3′x5′

APPLICATION
Fresh Pour Concrete Ramps & Replacement

Do not cut Cast-In-Place Replaceable Tactile. Use an appropriate sized tactile or Radius Tactile to fit the requirement. Contact manufacturer for more details.

Cast-In-Place Replaceable Tactile

(WET-SET) *Replacement Procedure*

Be sure to read and understand <u>all</u> of these instructions <u>before</u> you begin.

A. Lift the existing composite bolt cap from each anchor location on the ADA Cast-In-Place Replaceable Tactile unit (ADAREP) with a flat head screw driver.

B. Remove the existing 1/2" x 1½" heavy duty steel bolt & washer from each anchor location on the ADAREP unit with a ratchet. Save & reuse.

C. Tap around all sides of the ADAREP unit and across the middle with a rubber mallet, working in a grid pattern.

D. Pry the existing ADAREP unit from the concrete ramp with a small prybar, working around the edges until it can be lifted cleanly away.

E. Be sure to remove all small debris and dust from the existing impression in the concrete ramp.
IMPORTANT: Be careful not to get debris into anchor locations.

F. Replace new ADAREP unit, of same size and orientation, into impression in concrete ramp. Lightly tamp down the ADAREP unit with a rubber mallet and a piece of wood. Continue this process until the ADAREP unit is set firmly into existing impression in concrete ramp.
IMPORTANT: Avoid striking the ADAREP unit directly.

G. Bolt existing 1/2" x 1½" heavy duty steel bolt & washer back into each anchor location on new ADAREP unit.

H. Snap a new composite bolt cap provided, into each anchor location on the ADAREP unit. The ADAREP unit is ready for pedestrian traffic immediately after installation is complete.

U.S. Patent No. 7,775,981

View additional photos, drawings and specifications on our website: www.adatile.com. Call (800) 372-0519 with any questions.

Cast-In-Place Replaceable Tactile

Inline Dome Pattern

DOME GEOMETRY

In accordance with ADA Regulations for Detectable Warning on Curb Ramps: Raised truncated domes with a diameter of nominal 0.9", a height of nominal 0.2" and a center-to-center spacing of 2.35".

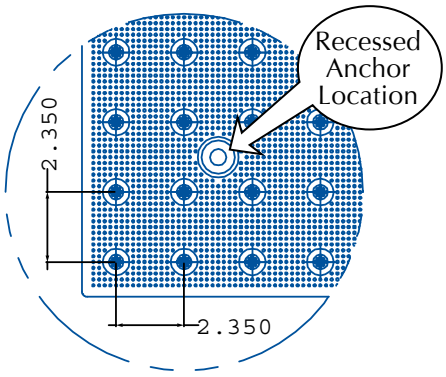

PANEL DIMENSIONS

ADA Cast-In-Place Replaceable Tactile units (ADAREP) are available in 24" x 36", 24" x 48", 24" x 60", 36" x 48" and 36" x 60" sizes. Do not cut Cast-In-Place Replaceable Tactile. Use an appropriate sized tactile or Radius Tactile to fit the requirement. Contact manufacturer for further details. ADAREP units measure ¼" nominal thickness and feature a ⅜" thick x 1" wide perimeter "flange."

MATERIAL

A homogenous glass and carbon composite which is colorfast and UV stable. Truncated domes are fiberglass reinforced for enhanced durability. The color of the ADAREP unit is uniform throughout and does not rely on any type of paint coating to achieve color stability. Standard colors include: Federal Yellow, Brick Red, Clay Red, Safety Red, Blue, Dark Gray and Black. For superior wheelchair, walker and shopping cart mobility, truncated domes have a center-to-center (horizontally and vertically) spacing of 2.35 inches.

PHYSICAL CHARACTERISTICS

Compressive Strength	28,900 psi	ASTM D 695
Flexural Strength	29,300 psi	ASTM D 790
Water Absorption	.07%	ASTM D 570
Slip Resistance	1.18 Dry, 1.05 Wet	ASTM C 1028
Flame Spread Index	20	ASTM E 84
Salt Spray	No Change (200 hours)	ASTM B 117
Chemical Stain Testing	No Deterioration	ASTM 1308
Abrasion Resistance	549	ASTM C 501
Accelerated Weathering	Delta E<5.0 (2,000 hours)	ASTM G 155
Tensile Strength	11,600 psi	ASTM D 638
Load Bearing at 16,000 lbs.	No Damage	AASHTO-H20
Freeze/Thaw/Heat	No Disintegration	ASTM C 1026

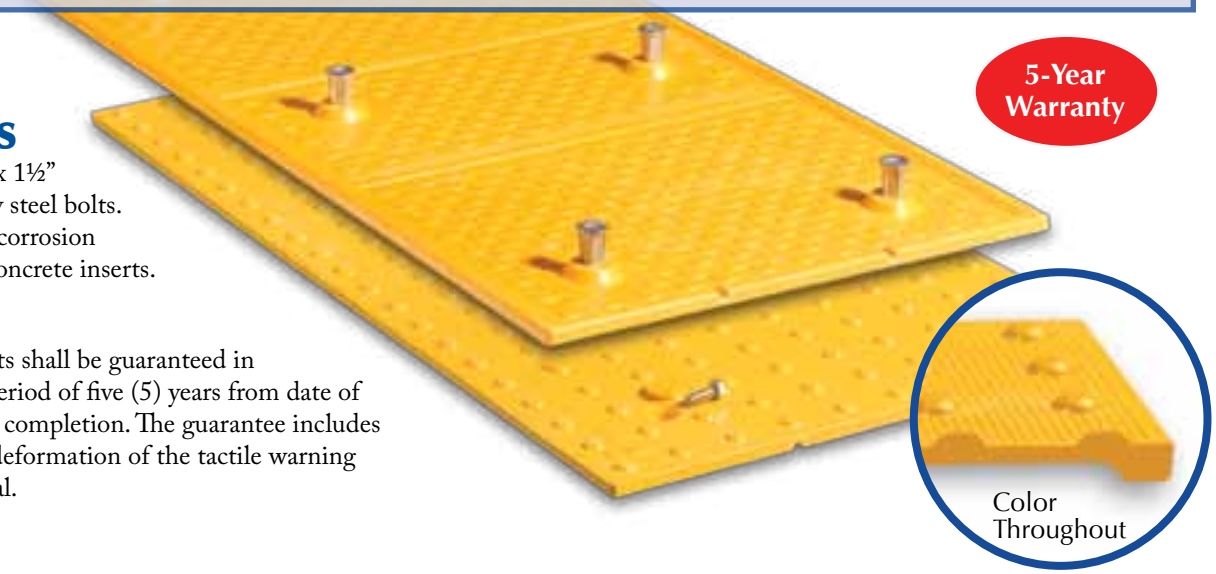

5-Year Warranty

INCIDENTALS

Fasteners: ½" x 1½" heavy duty steel bolts.
Anchors: 1½" corrosion resistant concrete inserts.

WARRANTY

ADAREP units shall be guaranteed in writing for a period of five (5) years from date of contract's final completion. The guarantee includes breakage and deformation of the tactile warning surface material.

CAST-IN-PLACE REPLACEABLE TACTILE

(WET-SET)

24″x36″ Tile
2.35″ Dome Spacing

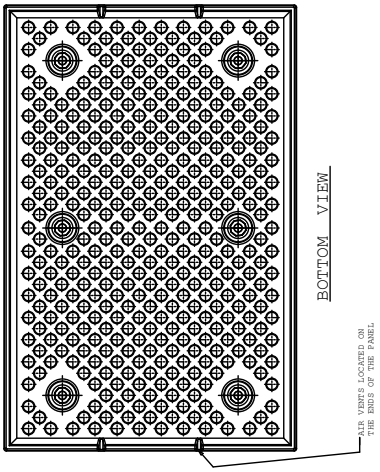

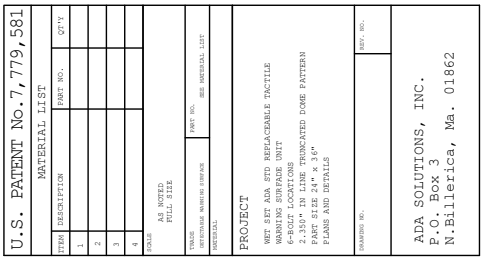

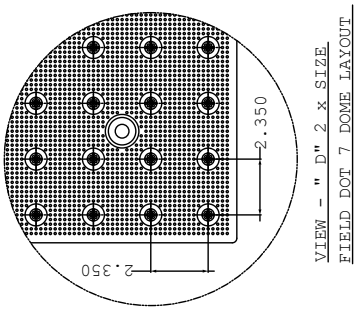

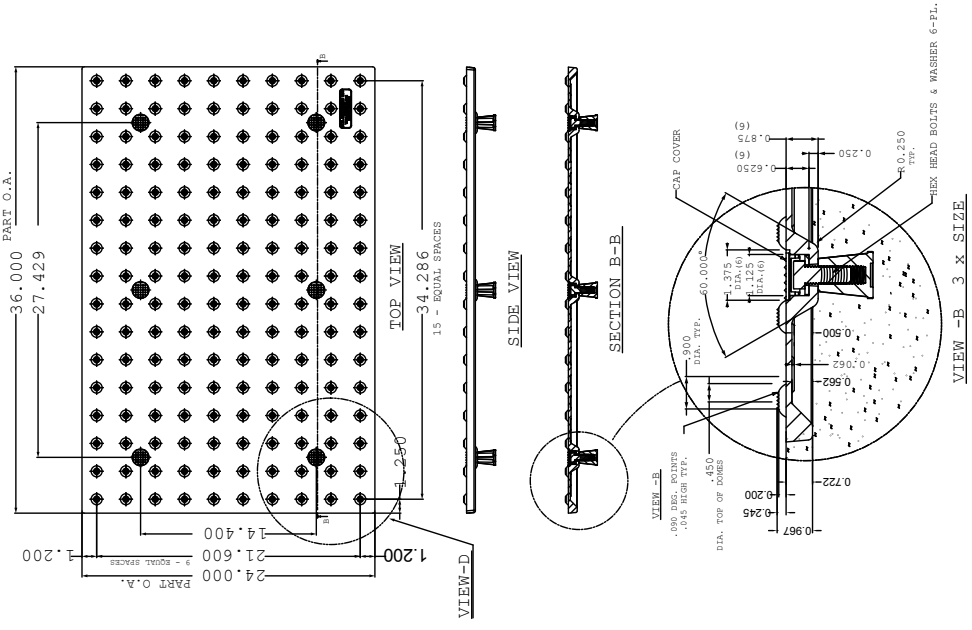

Cast-In-Place Replaceable Tactile

24″x48″ Tile

2.35″ Dome Spacing

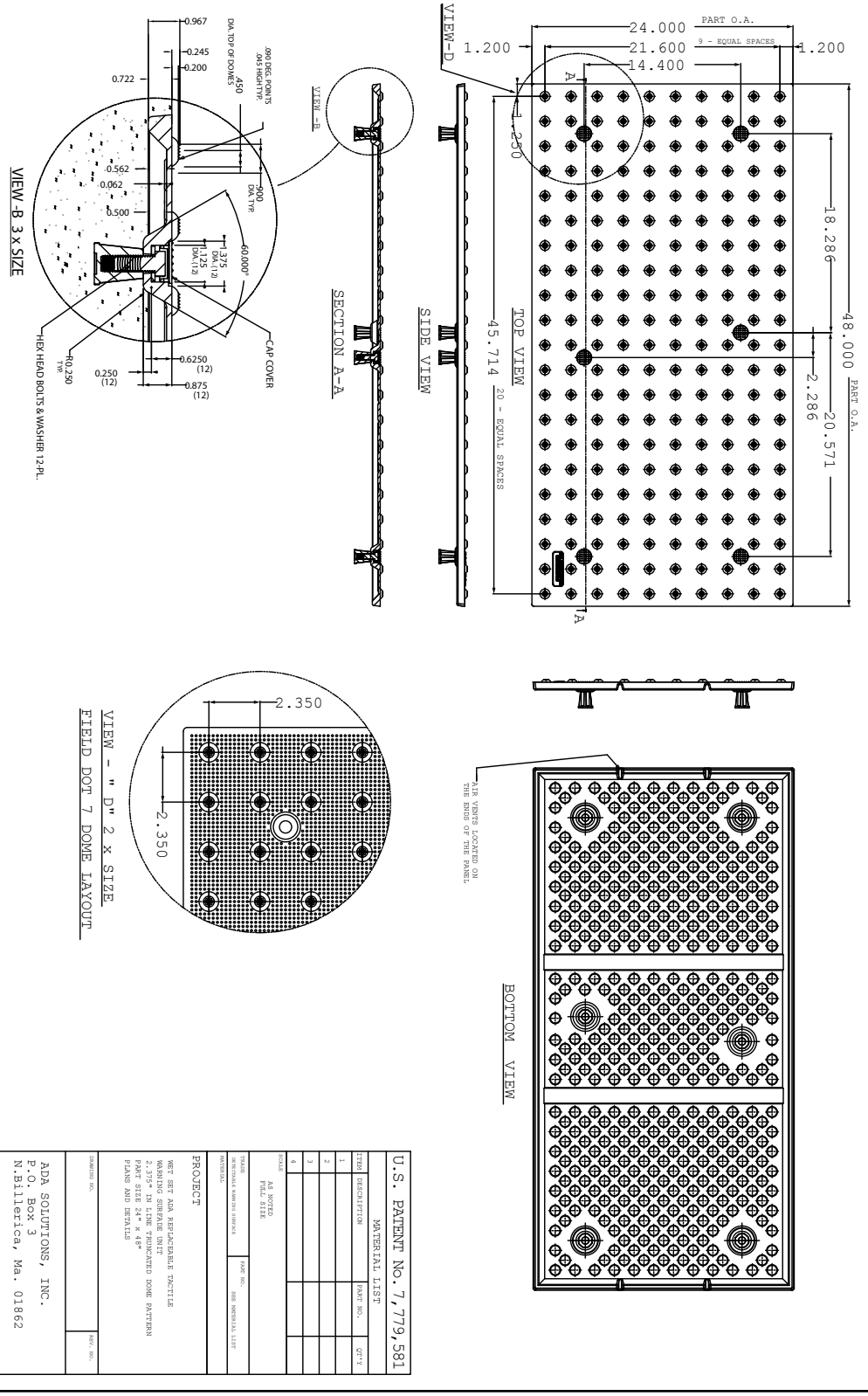

CAST-IN-PLACE REPLACEABLE TACTILE

(WET-SET)

24″x60″ Tile

2.35″ Dome Spacing

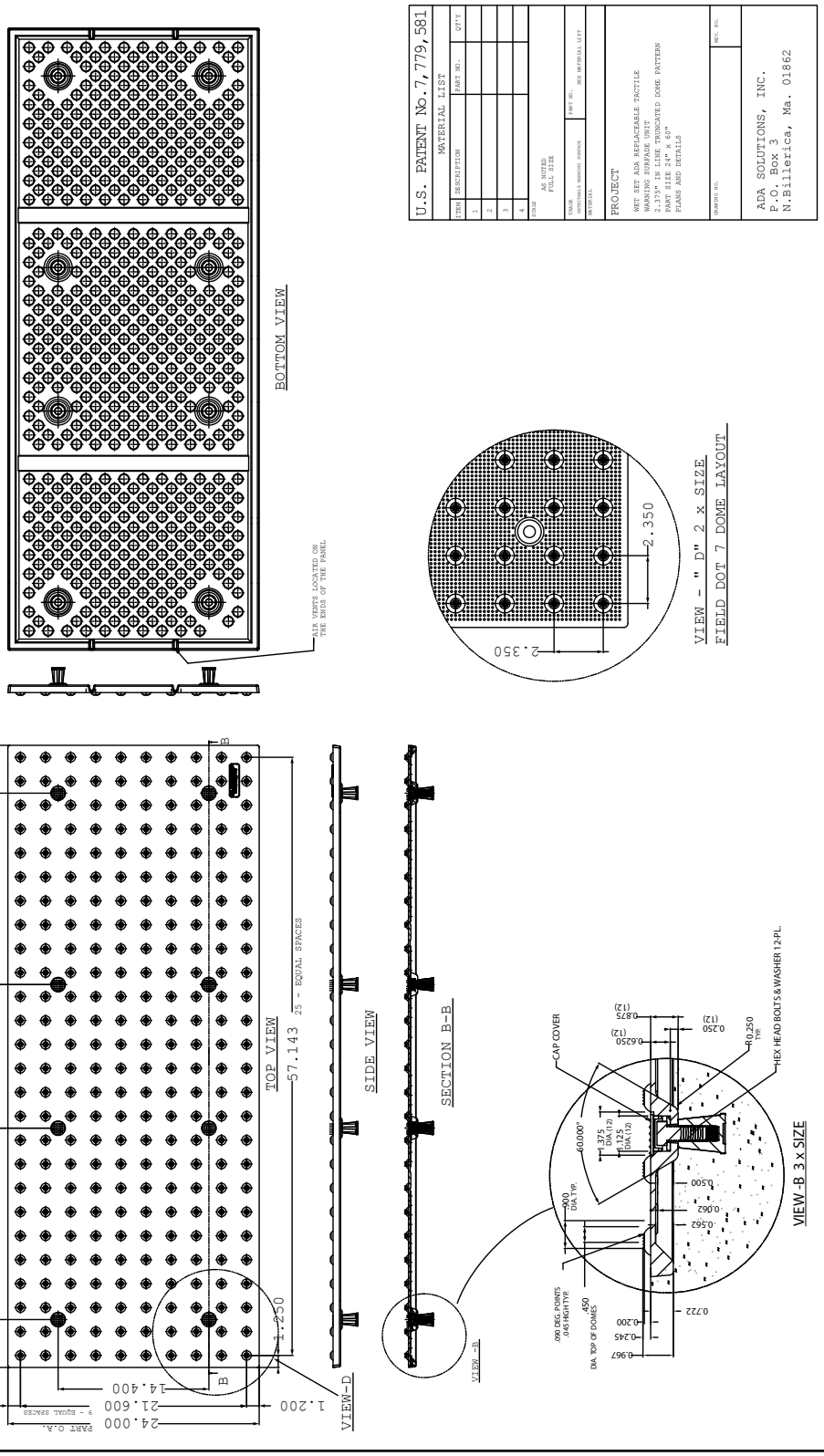

Cast-In-Place Replaceable Tactile

36"x48" Tile

2.35" Dome Spacing

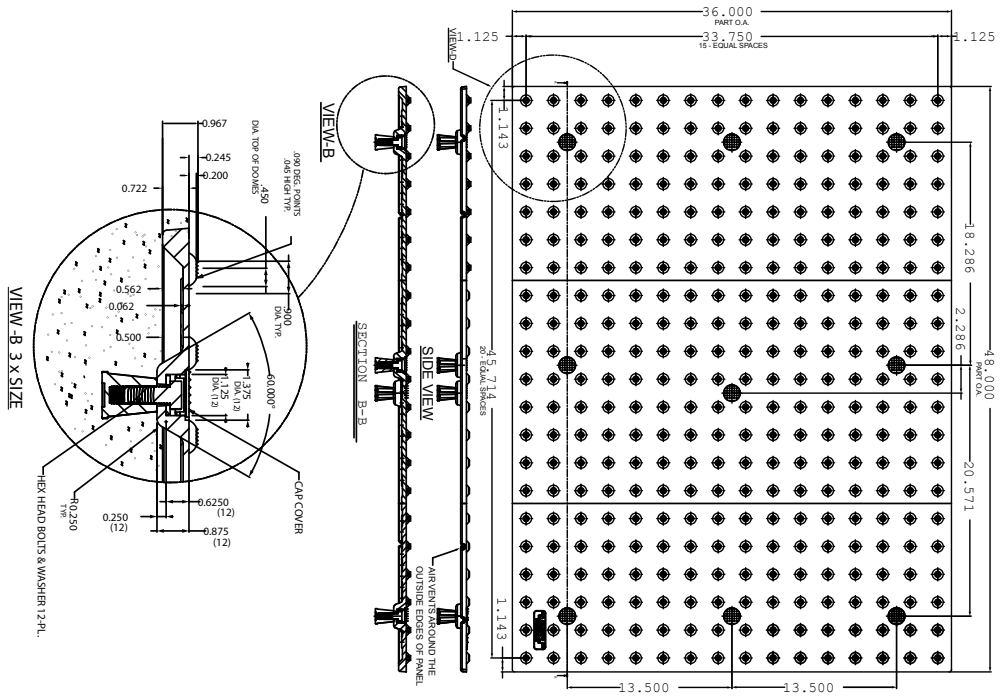

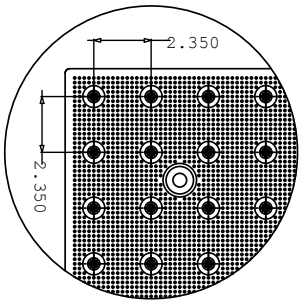

VIEW - " D" 2 x SIZE
FIELD DOT 13 ON DOME LAYOUT

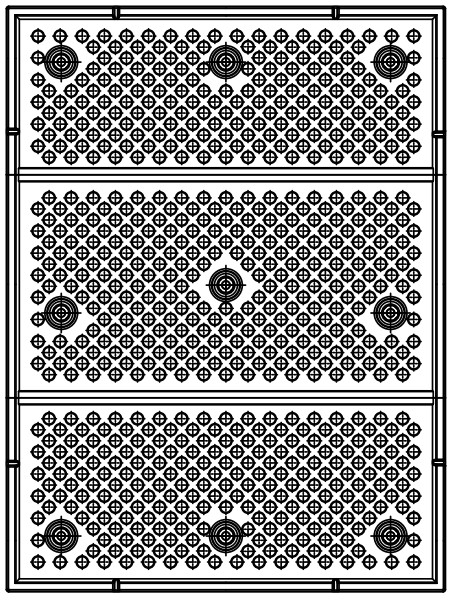

BOTTOM VIEW

U.S. PATENT No. 7,779,581

MATERIAL LIST

ITEM	DESCRIPTION	PART NO.	QT'Y.
1.			
2.			
3.			
4.			

SCALE: AS NOTED
FULL SIZE

DESCRIPTION: CAST-IN-PLACE REPLACEABLE WARNING SURFACE
PART NO.: SEE MATERIAL LIST

PROJECT: WET SET ADA REPLACEABLE TACTILE WARNING SURFACE UNIT. 2.35" IN LINE TRUNCATED DOME PATTERN PART SIZE 36" X 48" PLANS AND DETAILS

DRAWING NO.:

REV'S NO.:

ADA SOLUTIONS, INC.
P.O. Box 3
N.Billerica, Ma. 01862

Cast-In-Place Replaceable Tactile

(WET-SET)

36x60" Tile

2.35" Dome Spacing

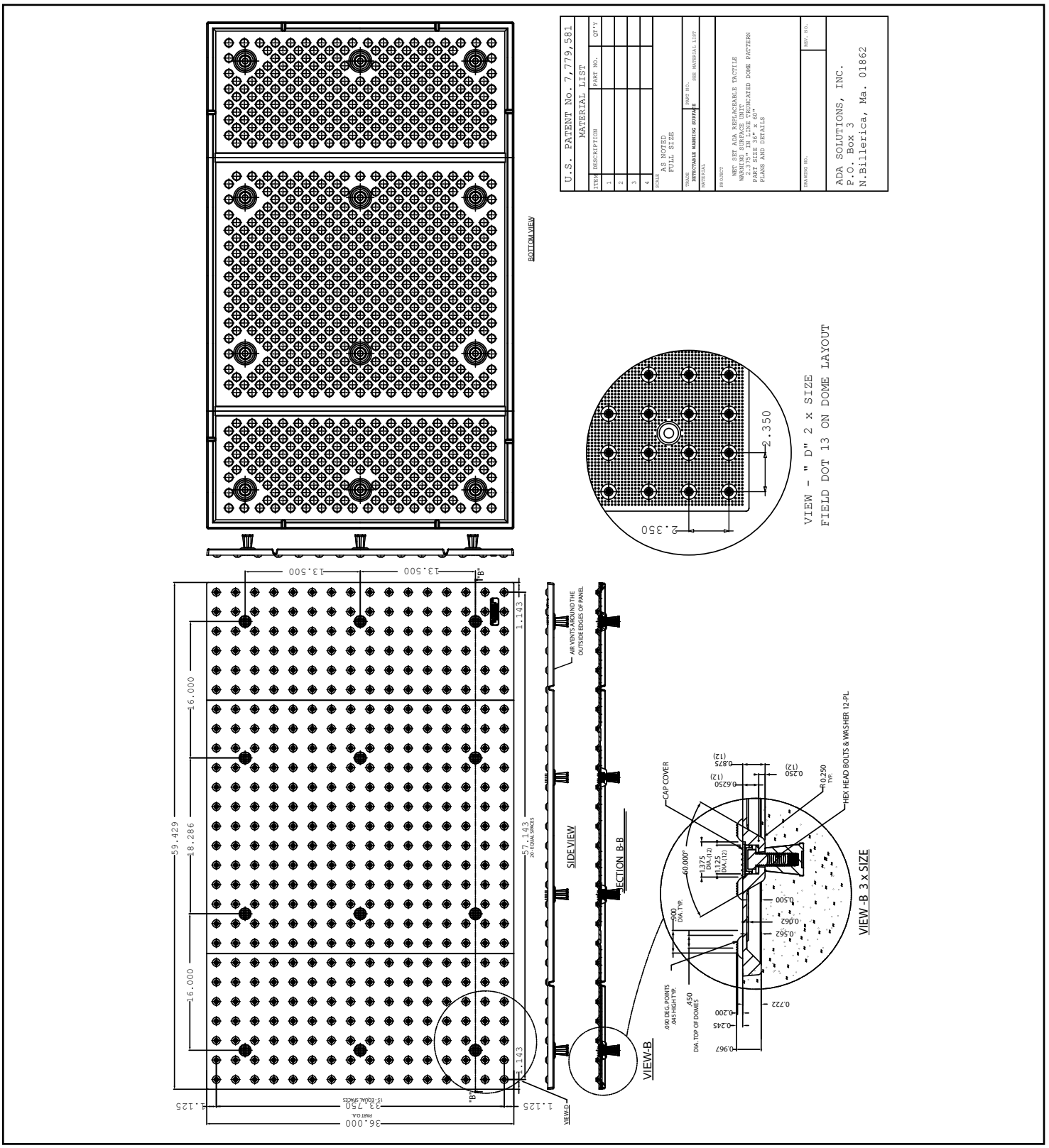

U.S. Patent
No. 7,779,581

Radius Tactile

cast-in-place replaceable (wet-set) or surface mount

Proudly Made in the U.S.A.

Radius Tactile - Replaceable

Installation Procedure

Be sure to read and understand <u>all</u> of these instructions <u>before</u> you begin.

A. The physical characteristics of the concrete shall be as specified in the contract documents while maintaining a slump range of 4-7 inches to permit the solid placement of the ADA Replaceable Tactile Unit (ADAREP) in the wet cement.

B. The concrete shall be poured and finished level, true and smooth to the required dimensions prior to the placement of the ADAREP unit.

C. Working in a grid pattern, tamp the ADAREP unit into the wet concrete using a rubber mallet and a piece of wood. Continue this process until all of the air has been released, and the ADAREP unit surface is flush with the surrounding area. ***IMPORTANT: Avoid striking the surface of the ADAREP unit directly.***

D. Following the placement, the ADAREP unit elevation should be checked to the adjacent surface with a straight edge. The ADAREP unit elevation should be consistent with the Contract Drawings and Specifications. Any required adjustments must be made prior to the time when the concrete begins to set.

E. ***IMPORTANT NOTICE TO INSTALLER:*** *To allow for expansion and contraction, after tile is installed, use a 1/4" finish edge trowel around entire perimeter. On a continuous run, be sure to space each unit 1/8" apart.*

F. When you are confident that the ADAREP unit is in place and no further adjustments are needed, place a cinder block on both ends to hold the ADAREP unit in place while the concrete sets.

G. During and after the ADAREP unit installation, as well as the concrete curing stage, no walking or external forces can be placed on the ADAREP unit. The area must be protected from pedestrian traffic until concrete is cured. The ADAREP Warning Surface will be ready for pedestrian traffic within 2-4 hours.

H. Be sure to remove plastic protective covering from the face of the ADAREP Unit once the concrete is cured.

***Not recommended or warrantied for asphalt installation.**

PRODUCT SIZES
2′ x 33¼″

APPLICATION
Fresh Pour Concrete Ramps & Replacement

View additional photos, drawings and specifications on our website: www.adatile.com. Call (800) 372-0519 with any questions.

Radius Tactile - Replaceable

(WET-SET) *Replacement Procedure*

Be sure to read and understand <u>all</u> of these instructions <u>before</u> you begin.

A. Lift the existing composite bolt cap from each anchor location on the ADA Replaceable Tactile unit (ADAREP) with a flat head screw driver.

B. Remove the existing 1/2" x 1½" heavy duty steel bolt & washer from each anchor location on the ADAREP unit with a ratchet. Save & reuse.

C. Tap around all sides of the ADAREP unit and across the middle with a rubber mallet, working in a grid pattern.

D. Pry the existing ADAREP unit from the concrete ramp with a small prybar, working around the edges until it can be lifted cleanly away.

E. Be sure to remove all small debris and dust from the existing impression in the concrete ramp.
IMPORTANT: Be careful not to get debris into anchor locations.

F. Replace new ADAREP unit into impression in concrete ramp. Lightly tamp down the ADAREP unit with a rubber mallet and a piece of wood. Continue this process until the ADAREP unit is set firmly into existing impression in concrete ramp.
IMPORTANT: Avoid striking the ADAREP unit directly.

G. Bolt existing 1/2" x 1½" heavy duty steel bolt & washer back into each anchor location on new ADAREP unit.

H. Snap a new composite bolt cap provided, into each anchor location on the ADAREP unit. The ADAREP unit is ready for pedestrian traffic immediately after installation is complete.

U.S. Patent No. 7,779,581

View additional photos, drawings and specifications on our website: www.adatile.com. Call (800) 372-0519 with any questions.

Radius Tactile - Replaceable

Inline Dome Pattern

DOME GEOMETRY

ADAAG, PROWAG and ADA/ABA Compliant in-line truncated dome pattern.

UNIVERSAL RADIUS TWS PANEL

Universal Radius TWS Panel is scored on backside for a 10', 15' and 20' radial condition and may be cut by a table saw to accommodate site conditions.

RADIUS PANEL SIZES

- ADA Replaceable TWS Unit: 24"x33¼", 6 recessed and capped ½"x1½" steel bolts with concrete inserts and heavy duty perimeter detail.

MATERIAL

A homogenous glass and carbon reinforced composite which is colorfast and UV stable. Truncated domes are fiberglass reinforced for enhanced durability. The color of the TWS Unit is uniform throughout and does not rely on any type of paint coating to achieve color stability. Standard colors: Federal Yellow, Brick Red, Clay Red, Safety Red, Blue, Dark Gray, and Black.

PHYSICAL CHARACTERISTICS

Compressive Strength	28,900 psi	ASTM D 695
Flexural Strength	29,300 psi	ASTM D 790
Slip Resistance	1.18 Dry, 1.05 Wet	ASTM C 1028
Chemical Stain Testing	No Deterioration	ASTM D 543
Abrasion Resistance	549	ASTM C 501
Accelerated Weathering	Delta E<5.0 (2,000 hours)	ASTM G 155
Tensile Strength	11,600 psi	ASTM D 638
Load Bearing at 16,000#	No Damage	AASHTO-H20
Freeze/Thaw/Heat	No Disintegration	ASTM C 1026

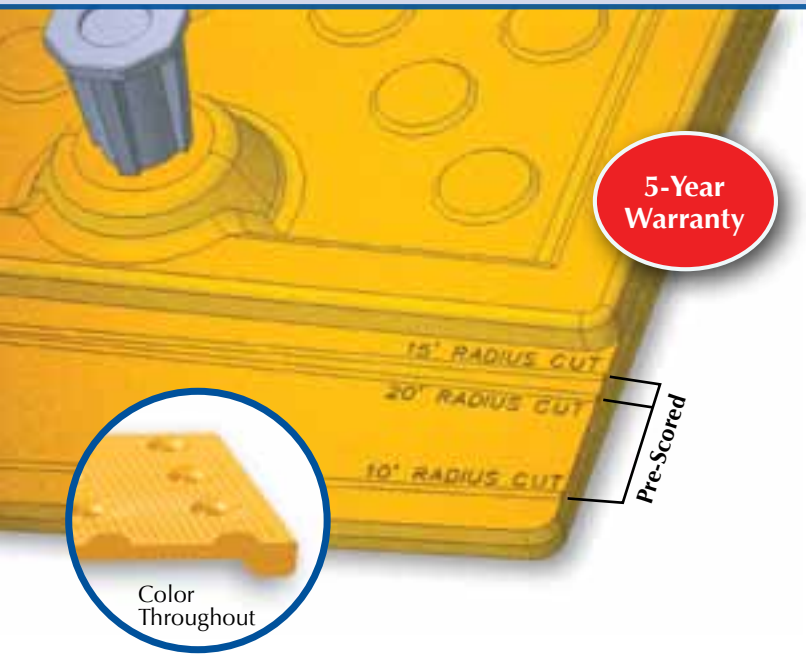

INSTALLATION

- ADA Replaceable TWS Unit (New Construction): TWS unit is easily installed in wet concrete in minutes. TWS unit can be quickly removed and replaced with basic tools.

WARRANTY

ADAREP units shall be guaranteed in writing for a period of five (5) years from date of contract's final completion. The guarantee includes breakage and deformation of the tactile warning surface material.

RADIUS TACTILE - REPLACEABLE

(WET-SET)

24″x33.25″ Tile

2.35″ Dome Spacing

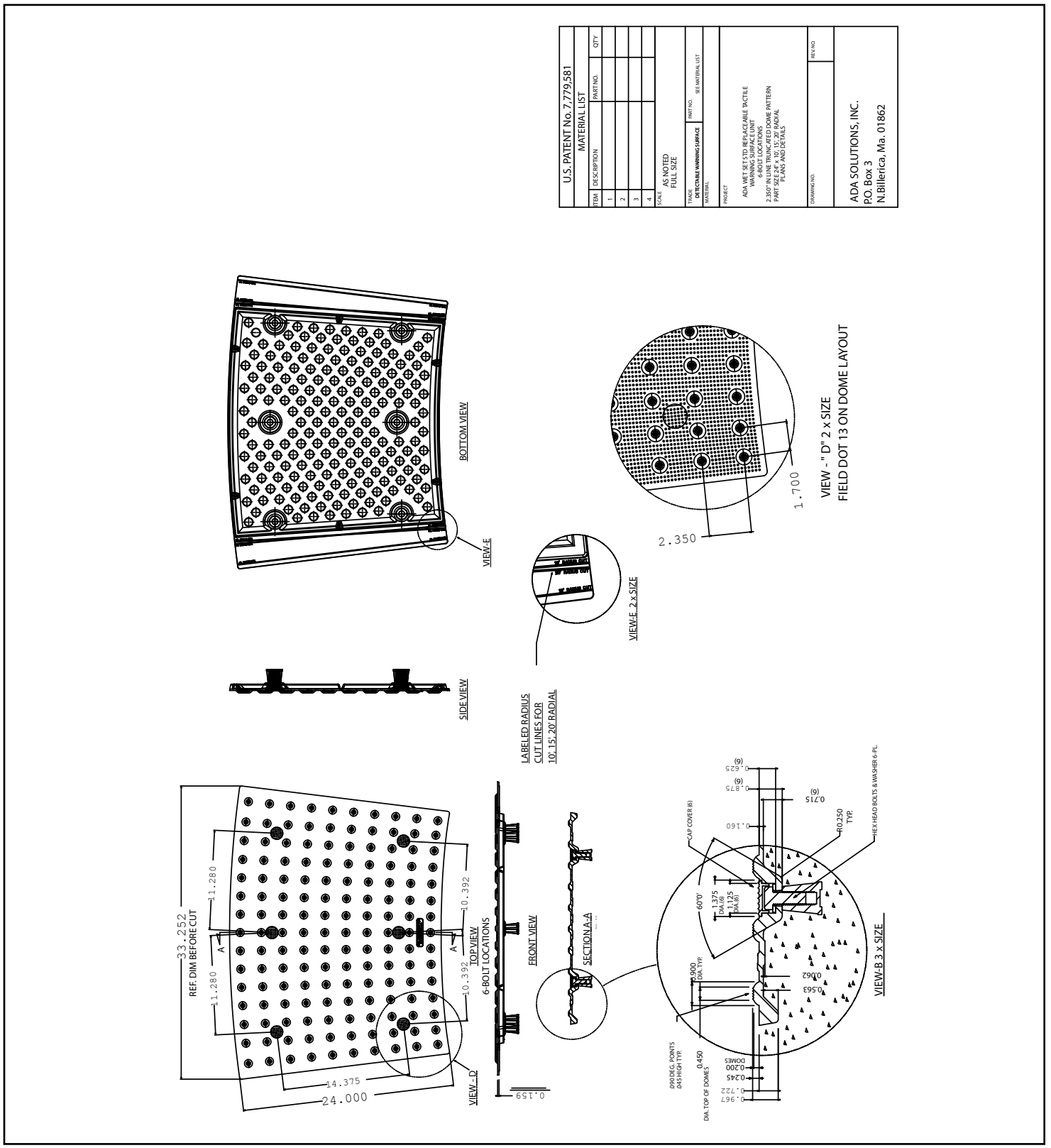

ONE WAY
Kinko's

Radius Tactile - Surface Mount

Installation Procedure

Be sure to read and understand <u>all</u> of these instructions <u>before</u> you begin.

A. The installation area should be cleaned of all debris, oil and grease, making sure the area is completely free of moisture. Tactile Panel may be surface mounted on existing pre-cleaned substrate.

B. Lay out the Tactile Panel on the substrate as it will appear when installed.

- If required, Universal Radius TWS Panel is scored on backside for a 10', 15' and 20' radial condition and may be cut by a table saw to accomodate site conditions. See web site for more details.

C. Place a 3/8" bead of adhesive on the frame of the bottom of each Tactile Panel. Adhesive yield: 10SF per 10 ounce cartridge.

D. Set the Tactile Panel in the installation area. Make all necessary adjustments prior to fastening.

E. Fasteners shall be installed in pre-formed fastener locations. Holes shall be drilled using a hammer drill with 1/4" x 2" min SDS bits. The drilled holes must be a minimum of 2" deep. Place fasteners in hole and hammer into place.

- If additional fasteners are required, use a 1/2", six point, 82 degree countersink to add a new fastener location. Follow the same drilling method for installing the fastener.

F. Caulk around perimeter of entire installation using BASF NP1 or equivalent.

- All concrete dust present on the Tactile Panel resulting from the drilling process must be cleaned off of the Tactile Panel prior to using any caulking materials.

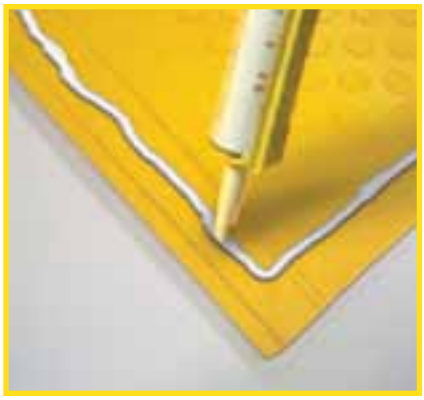

***Not recommended or warrantied for asphalt installation.**

PRODUCT SIZES
2' x 33¼"

APPLICATION
Existing Concrete Ramps

View additional photos, drawings and specifications on our website: www.adatile.com. Call (800) 372-0519 with any questions.

Radius Tactile - Surface Mount

Inline Dome Pattern

DOME GEOMETRY

ADAAG, PROWAG and ADA/ABA Compliant in-line truncated dome pattern.

UNIVERSAL RADIUS TWS PANEL

Universal Radius TWS Panel is scored on backside for a 10', 15' and 20' radial condition and may be cut by a table saw to accommodate site conditions.

RADIUS PANEL SIZES

- ADA Surface Applied TWS Panel: 24" x 33¼", 16 composite sleeve anchors with stainless steel pins, adhesive & perimeter sealant.

MATERIAL

A homogenous glass and carbon reinforced composite which is colorfast and UV stable. Truncated domes are fiberglass reinforced for enhanced durability. The color of the TWS Unit is uniform throughout and does not rely on any type of paint coating to achieve color stability. Standard colors: Federal Yellow, Brick Red, Clay Red, Safety Red, Blue, Dark Gray, and Black.

PHYSICAL CHARACTERISTICS

Compressive Strength	28,900 psi	ASTM D 695
Flexural Strength	29,300 psi	ASTM D 790
Slip Resistance	1.18 Dry, 1.05 Wet	ASTM C 1028
Chemical Stain Testing	No Deterioration	ASTM D 543
Abrasion Resistance	549	ASTM C 501
Accelerated Weathering	Delta E<5.0 (2,000 hours)	ASTM G 155
Tensile Strength	11,600 psi	ASTM D 638
Load Bearing at 16,000#	No Damage	AASHTO-H20
Freeze/Thaw/Heat	No Disintegration	ASTM C 1026

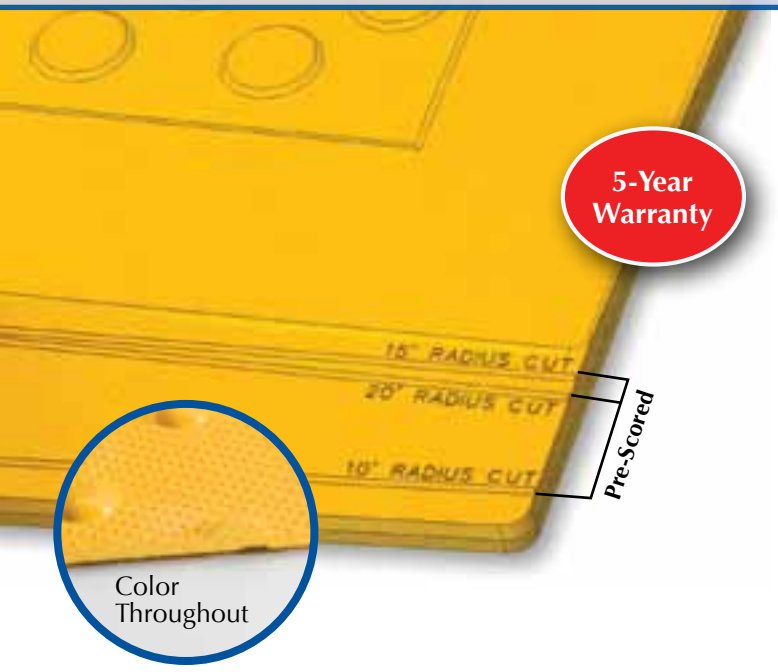

INSTALLATION

- ADA Surface Applied TWS Panel (Existing Concrete): TWS panel can be easily installed (adhered, fastened & sealed) in a matter of minutes.

INCIDENTALS

Fasteners: ¼" x 1⅝", composite sleeve anchor with stainless steel pins.
Adhesive: One component structural elastomeric adhesive.
Sealant: BASF NP1, Sikaflex 1A, or equivalent.

WARRANTY

Tactile Units shall be guaranteed in writing for a period of five (5) years from date of contract's final completion. The guarantee includes breakage and deformation of the tactile warning surface material.

Radius Tactile - Surface Mount

24″x33.25″ Tile

2.35″ Dome Spacing

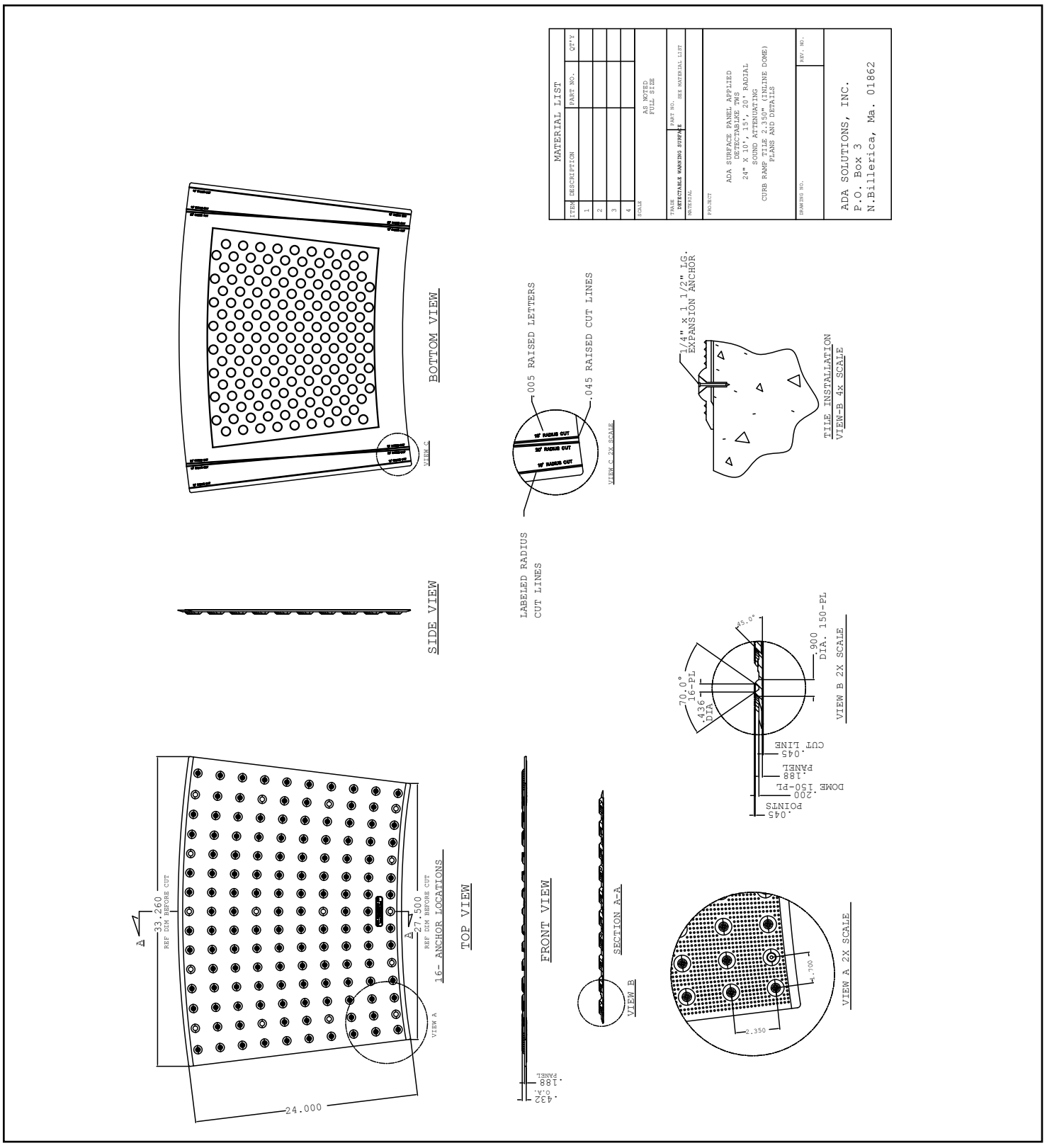

Surface Mount Tactile

Proudly Made in
the U.S.A.

Surface Mount Tactile

Installation Procedure

Be sure to read and understand <u>all</u> of these instructions <u>before</u> you begin.

A. The installation area should be cleaned of all debris, oil and grease, making sure the area is completely free of moisture. Tactile Panel may be surface mounted on existing pre-cleaned substrate.

B. Lay out the Tactile Panel on the substrate as it will appear when installed.
- If required, the Tactile Panel may be cut using a table saw and carbide blade. See web site for more details.

C. Place a 3/8" bead of adhesive on the frame of the bottom of each Tactile Panel. Adhesive yield: 10SF per 10 ounce cartridge.

D. Set the Tactile Panel in the installation area. Make all necessary adjustments prior to fastening.

E. Fasteners shall be installed in pre-formed fastener locations. Holes shall be drilled using a hammer drill with 1/4" x 2" min SDS bits. The drilled holes must be a minimum of 2" deep. Place fasteners in hole and hammer into place.
- If additional fasteners are required, use a 1/2", six point, 82 degree countersink to add a new fastener location. Follow the same drilling method for installing the fastener.

F. Caulk around perimeter of entire installation using BASF NP1 or equivalent.
- All concrete dust present on the Tactile Panel resulting from the drilling process must be cleaned off of the Tactile Panel prior to using any caulking materials.

***Not recommended or warrantied for asphalt installation.**

PRODUCT SIZES
2′x3′ 2′x4′ 2′x5′
3′x4′ 3′x5′

APPLICATION
Existing Concrete Ramps

View additional photos, drawings and specifications on our website: www.adatile.com. Call (800) 372-0519 with any questions.

Surface Mount Tactile

Inline Dome Pattern

DOME GEOMETRY

In accordance with ADA Regulations for Detectable Warning on Curb Ramps: Raised truncated domes with a diameter of nominal 0.9", a height of nominal 0.2", and a center-to-center spacing of nominal 1.67" minimum and 2.35" maximum.

PANEL DIMENSIONS

Tactile Panels are available in 24"x36", 24"x48", 24"x60", 36"x48" and 36"x60" sizes and measure 3/16" thick. Panels can be custom cut to fit field conditions. All four edges of each panel have a ½" beveled edge. Each panel has 12 to 24 pre-formed fastener locations based upon panel size.

MATERIAL

A homogenous glass and carbon reinforced composite which is colorfast and UV stable. Truncated domes are fiberglass reinforced for enhanced durability. The Tactile panel color is uniform throughout and does not rely on any type of paint coating to achieve color stability. Standard colors include: Federal Yellow, Brick Red, Clay Red, Safety Red, Blue, Dark Gray and Black.

PHYSICAL CHARACTERISTICS

Compressive Strength	28,900 psi	ASTM D 695
Flexural Strength	29,300 psi	ASTM D 790
Water Absorption	.07%	ASTM D 570
Slip Resistance	1.18 Dry/1.05 Wet	ASTM C 1028
Flame Spread Index	20	ASTM E 84
Salt Spray	No Change (200 hours)	ASTM B 117
Chemical Stain Testing	No Deterioration	ASTM 1308
Abrasion Resistance	549	ASTM C 501
Accelerated Weathering	Delta E<5.0 (2,000 hours)	ASTM G 155
Tensile Strength	11,600 psi	ASTM D 638
Adhesion to Conc. (20-180 degrees)	No Delamination or Degradation	ASTM C 903
Freeze/Thaw/Heat	No Disintegration	ASTM C 1026

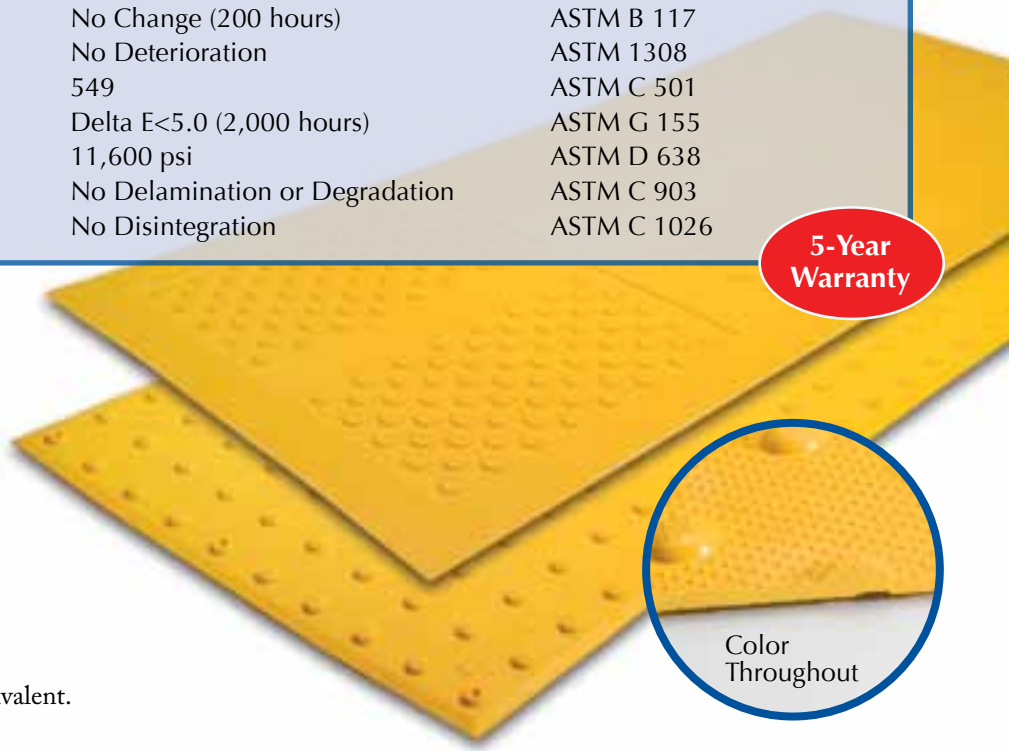

INSTALLATION

- ADA Surface Applied TWS Panel (Existing Concrete): TWS panel can be easily installed (adhered, fastened & sealed) in a matter of minutes.

INCIDENTALS

Fasteners: ¼" x 1⅝", composite sleeve anchor with stainless steel pins.
Adhesive: One component structural elastomeric adhesive.
Sealant: BASF NP1, Sikaflex 1A, or equivalent.

Surface Mount Composite Tactile

24″x36″ Tile

1.67″ Dome Spacing

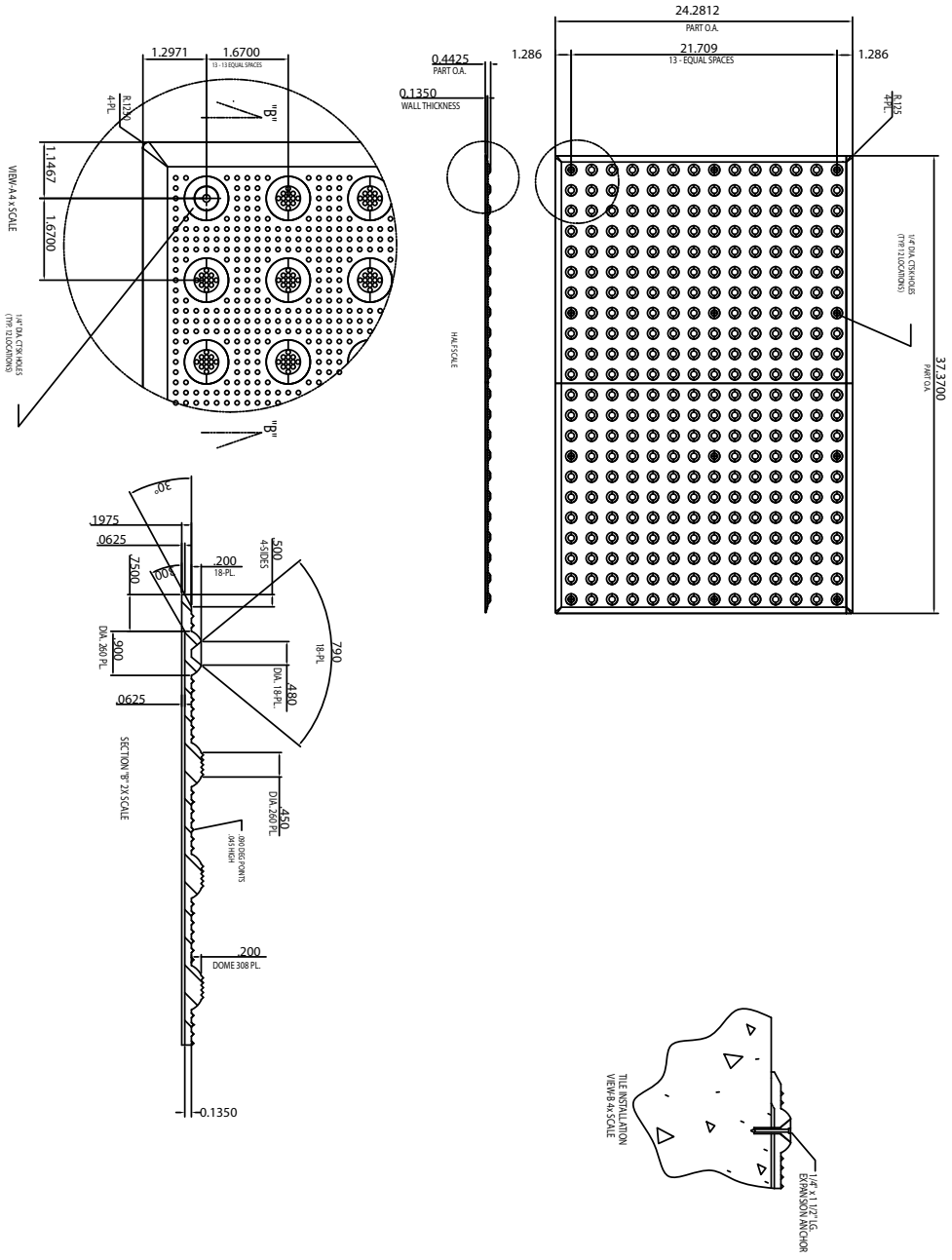

ITEM	DESCRIPTION	PART NO.	QTY.
1			
2			
3			
4			

MATERIAL LIST

SCALE: AS NOTED FULL SIZE

TRADE: DETECTABLE WARNING SURFACE

PART NO.: SEE MATERIAL LIST

MATERIAL:

PROJECT:
SURFACE APPLIED DETECTABLE WARNING SURFACE SYSTEM
24" x 36" SOUND ATTENUATING CURB RAMP TILE (INLINE DOME)
PLANS AND DETAILS

DRAWING NO.

REV. NO.

ADA SOLUTIONS, INC.
PO Box 3
N.Billerica, Ma. 01862

Surface Mount Composite Tactile

24″x36″ Tile

2.35″ Dome Spacing

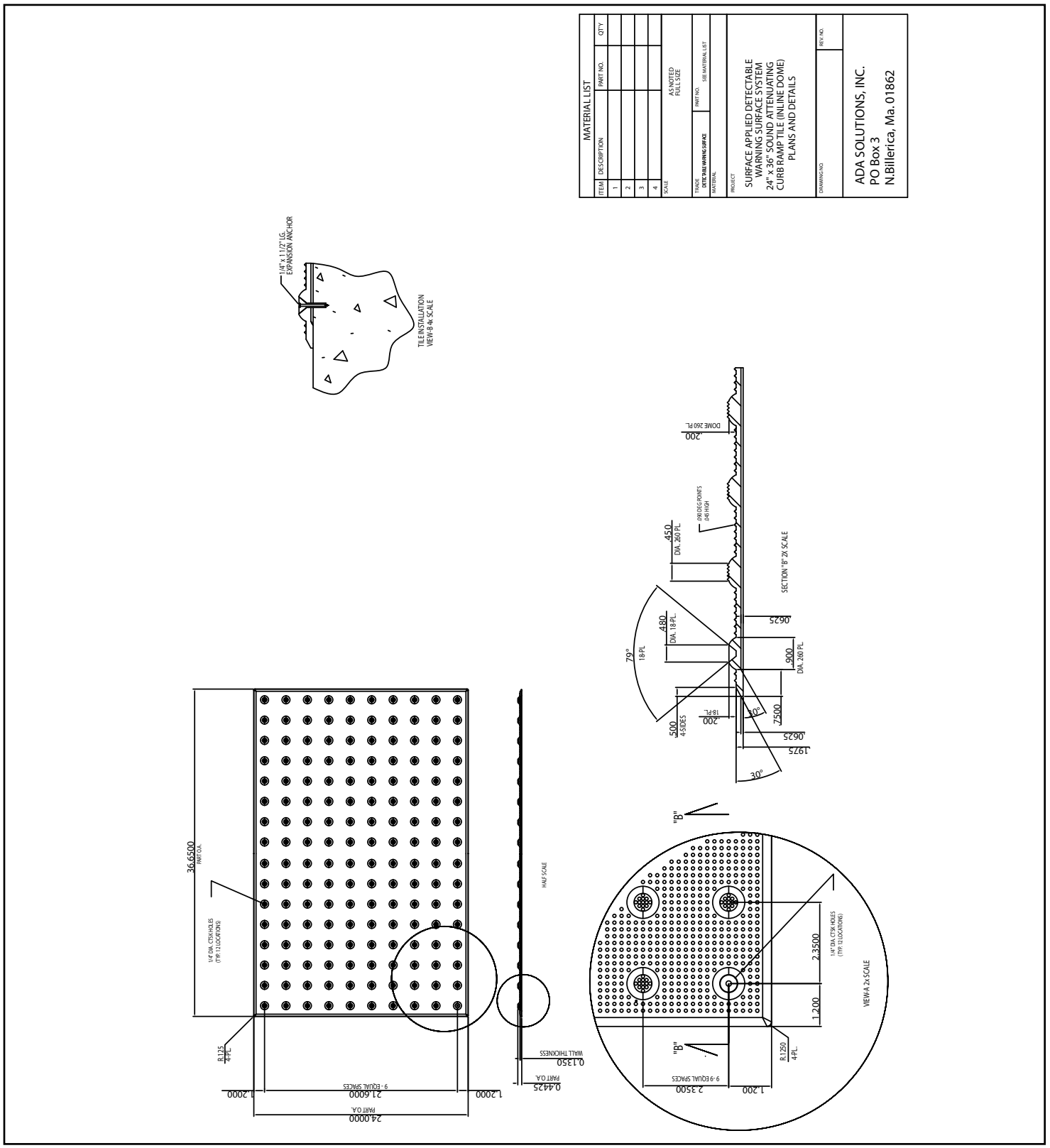

Surface Mount Composite Tactile

24″x48″ Tile

1.67″ Dome Spacing

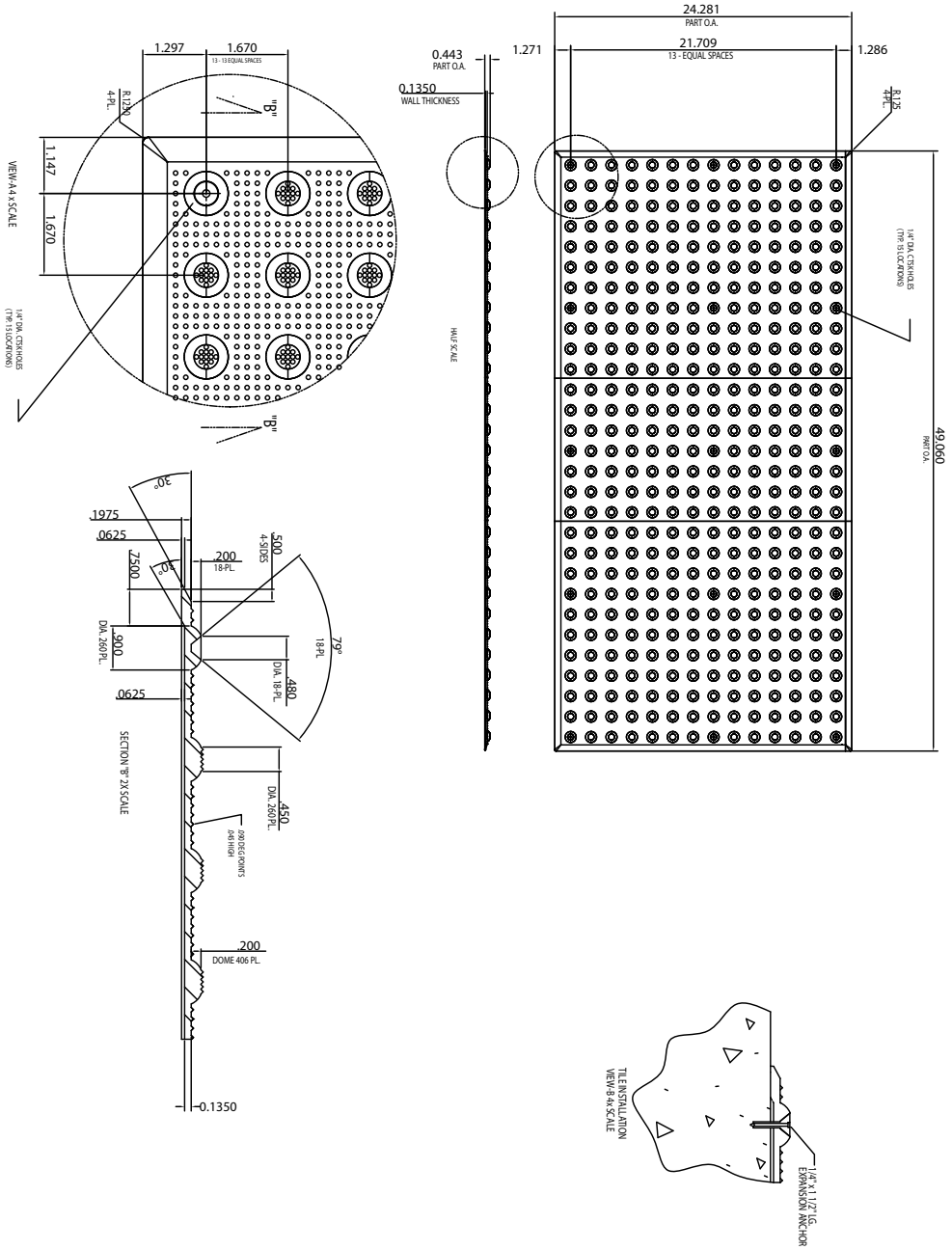

MATERIAL LIST

ITEM	DESCRIPTION	PART NO.	QTY
1			
2			
3			
4			

SCALE: AS NOTED / FULL SIZE

TRUE DETECTABLE WARNING SURFACE

PART NO: SEE MATERIAL LIST

MATERIAL

PROJECT

SURFACE APPLIED DETECTABLE WARNING SURFACE SYSTEM
24" x 48" SOUND ATTENUATING CURB RAMP TILE (INLINE DOME)
PLANS AND DETAILS

DRAWING NO.

REV. NO.

ADA SOLUTIONS, INC.
PO Box 3
N.Billerica, Ma. 01862

Surface Mount Composite Tactile

24″x48″ Tile

2.35″ Dome Spacing

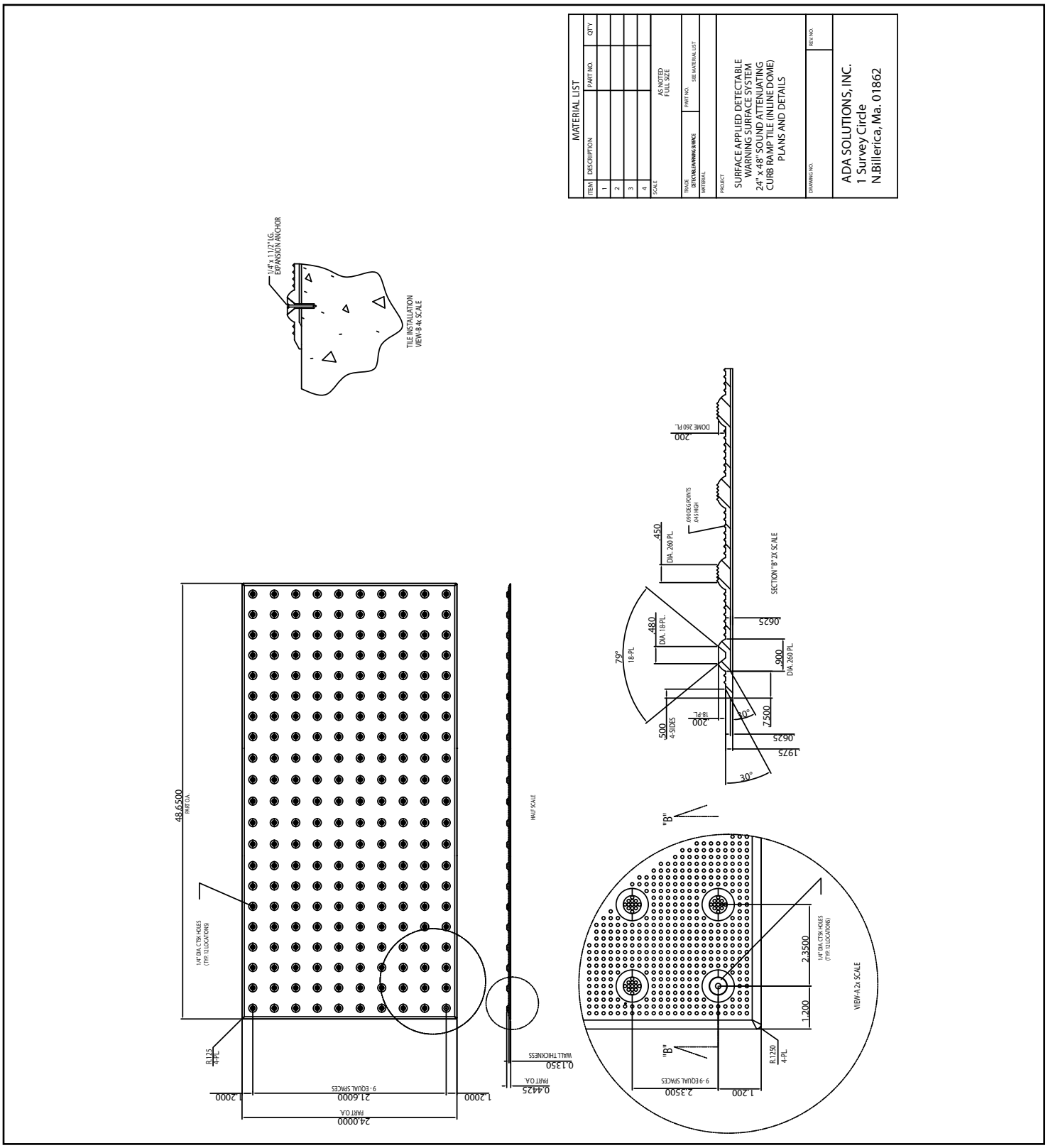

Surface Mount Composite Tactile

24″x60″ Tile

1.67″ Dome Spacing

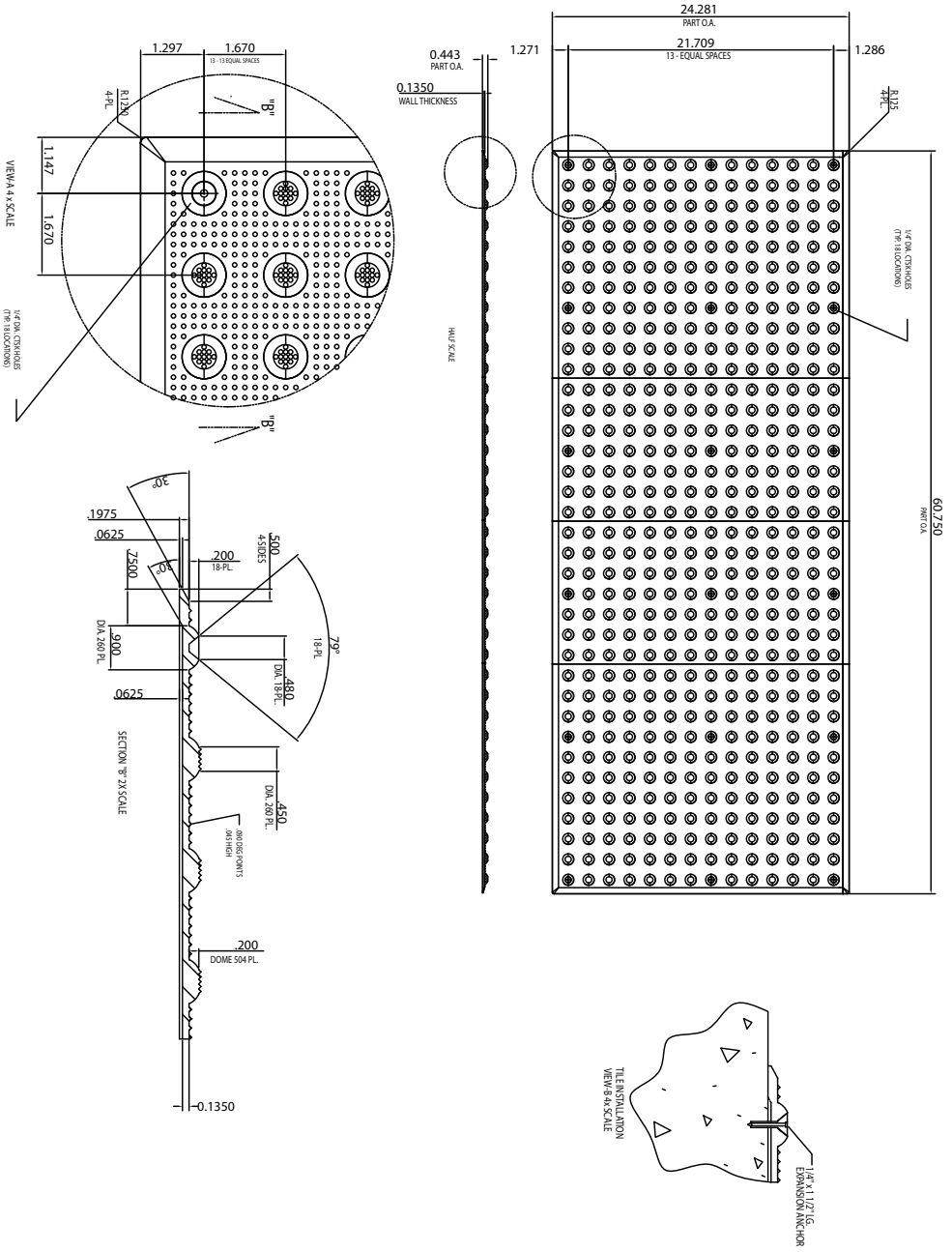

MATERIAL LIST			
ITEM	DESCRIPTION	PART NO.	QTY
1			
2			
3			
4			

SCALE: AS NOTED FULL SIZE

TRADE: DETECTABLE WARNING SURFACE

MATERIAL: PART NO.: SEE MATERIAL LIST

PROJECT:
SURFACE APPLIED DETECTABLE WARNING SURFACE SYSTEM
24" x 60" SOUND ATTENUATING CURB RAMP TILE (INLINE DOME)
PLANS AND DETAILS

DRAWING NO.

REV. NO.

ADA SOLUTIONS, INC.
PO Box 3
N.Billerica, Ma. 01862

SURFACE MOUNT COMPOSITE TACTILE

24″x60″ Tile

2.35″ Dome Spacing

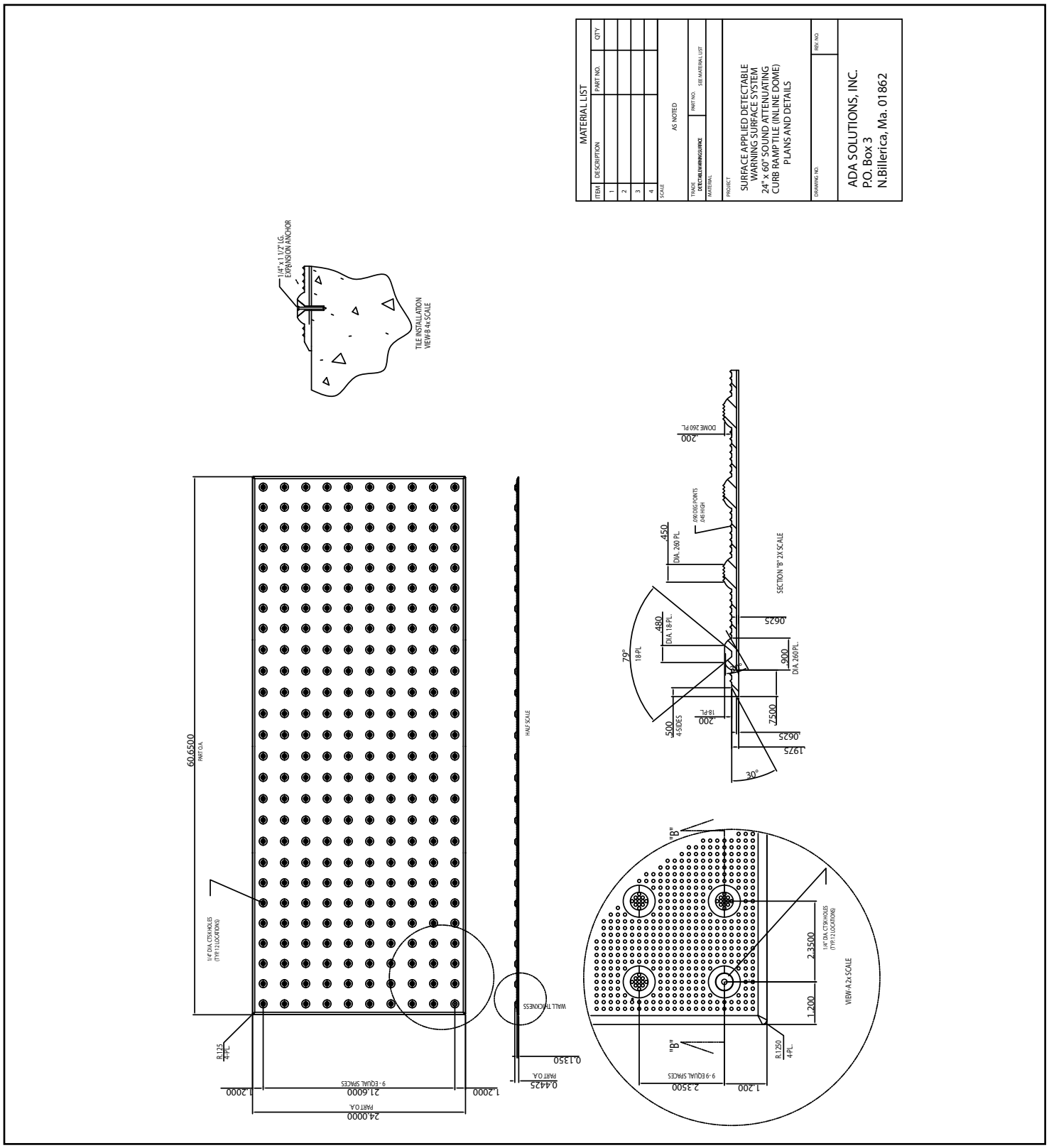

Surface Mount Composite Tactile

36″x48″ Tile

1.67″ Dome Spacing

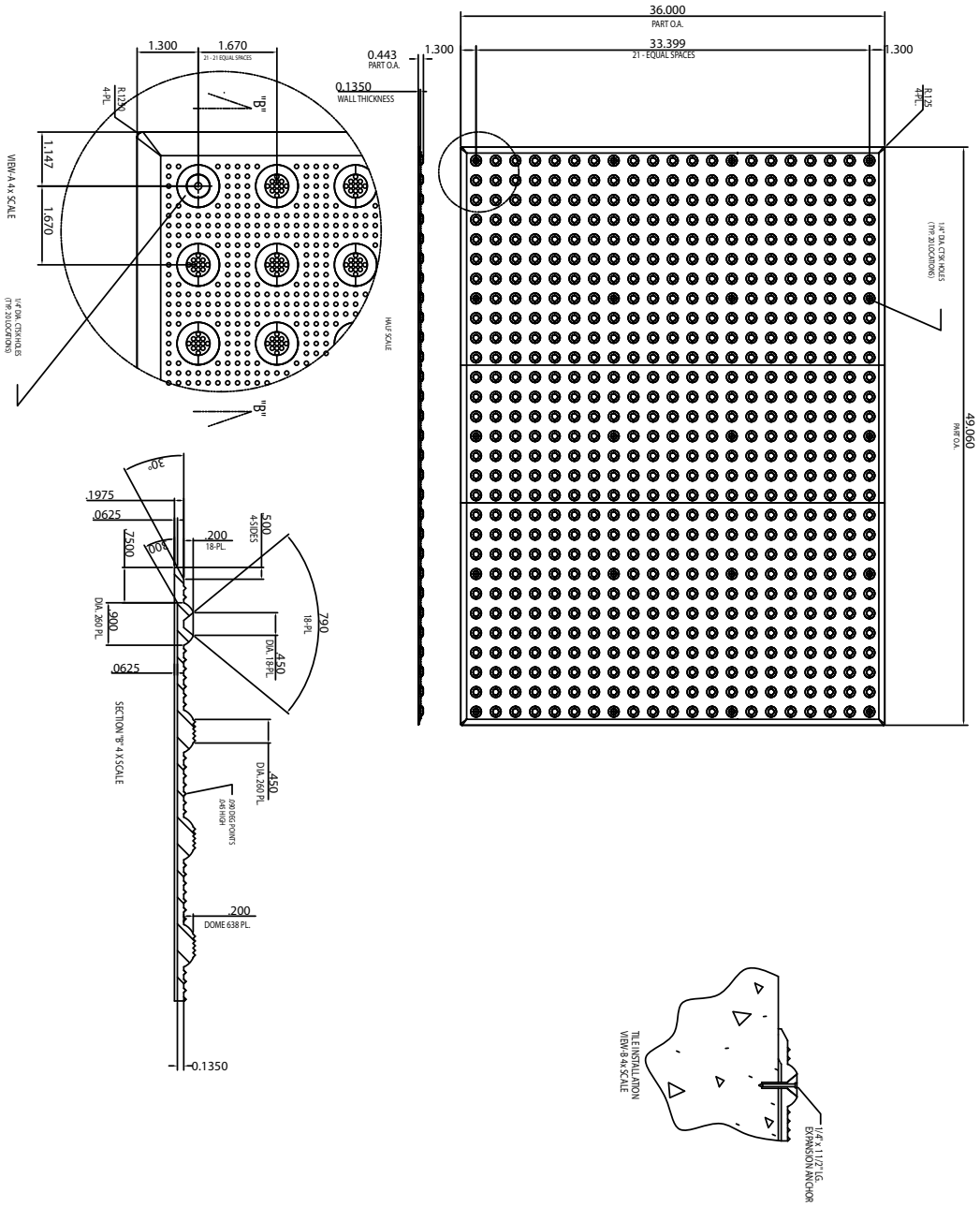

ITEM	DESCRIPTION	PART NO.	QTY
1			
2			
3			
4			

MATERIAL LIST

SCALE: AS NOTED FULL SIZE

TYPE OF MATERIAL: DETECTABLE WARNING SURFACE

PW/F NO.: SEE MATERIAL LIST

PROJECT:
SURFACE APPLIED DETECTABLE WARNING SURFACE SYSTEM
36" x 48" SOUND ATTENUATING CURB RAMP TILE (INLINE DOME)
PLANS AND DETAILS

DRAWING NO.

REV. NO.

ADA SOLUTIONS, INC.
PO Box 3
N.Billerica, Ma. 01862

Surface Mount Composite Tactile

36″x60″ Tile

1.67″ Dome Spacing

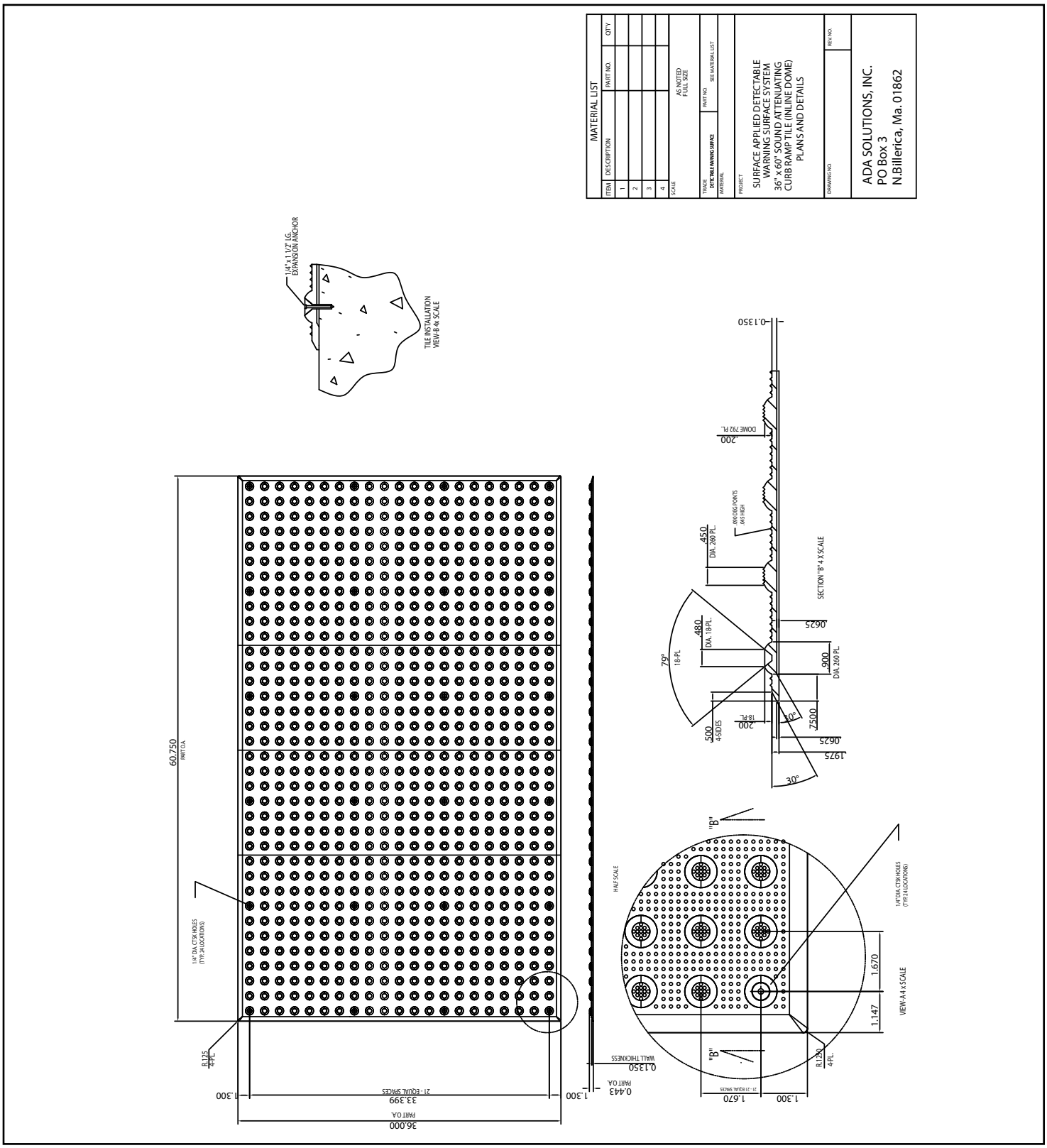

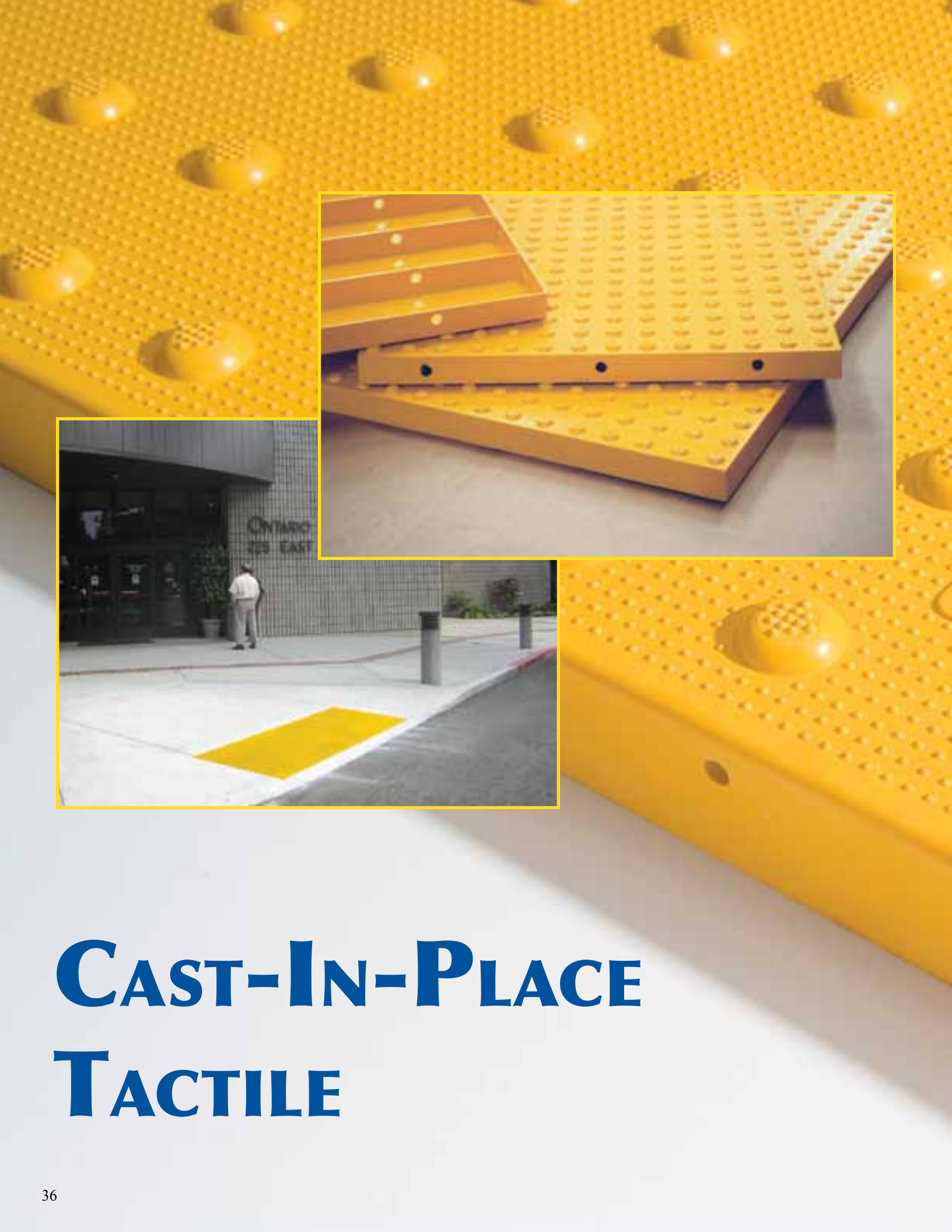

Cast-In-Place Tactile

Proudly Made in
the U.S.A.
ADA SOLUTIONS INC
WWW.ADATILE.COM

Cast-In-Place Tactile

Installation Procedure

Be sure to read and understand <u>all</u> of these instructions <u>before</u> you begin.

A. The physical characteristics of the concrete shall be as specified in the contract documents while maintaining a slump range of 4-7 to permit the solid placement of the Tactile Unit in the wet cement.

B. The concrete shall be poured and finished level, true and smooth to the required dimensions prior to the placement of the Tactile Unit.

C. Place the Tactile Unit 6-8 inches from the curb line. Working in a grid pattern, tamp the Tactile Unit into the wet concrete using a rubber mallet and a piece of wood. Continue this process until all of the air has been released, and the Tactile Unit surface is flush with the surrounding area. ***IMPORTANT: Avoid striking the surface of the Tactile Unit directly.***

D. Following the placement, the Tactile Unit elevation should be checked to the adjacent surface with a straight edge. The Tactile Unit elevation should be consistent with the contract drawings and specifications. Any required adjustments must be made prior to the time when the concrete begins to set.

E. ***IMPORTANT NOTICE TO INSTALLER:*** *To allow for expansion and contraction, after tile is installed, use a 1/4" finish edge trowel around entire perimeter. On a continuous run, be sure to space each unit 1/8" apart.*

F. When you are confident that the Tactile Unit is in place, and no further adjustments are needed, place a cinder block on both ends to hold the Tactile Unit in place while the concrete sets.

G. During and after the Tactile Unit installation, as well as the concrete curing stage, no walking or external forces can be placed on the Tactile Unit. The area must be protected from pedestrian traffic until concrete is cured. The Tactile Warning Surface will be ready for pedestrian traffic within 2-4 hours.

H. Be sure to remove plastic protective covering from the face of the Tactile Unit once the concrete is cured.

***Not recommended or warrantied for asphalt installation.**

PRODUCT SIZES
2′x3′ 2′x4′ 2′x5′
3′x4′ 3′x5′

APPLICATION
Fresh Pour Concrete Ramps

View additional photos, drawings and specifications on our website: www.adatile.com. Call (800) 372-0519 with any questions.

Cast-In-Place Tactile

Inline Dome Pattern

DOME GEOMETRY

In accordance with ADA Regulations for Detectable Warning on Curb Ramps: Raised truncated domes with a diameter of nominal 0.9", a height of nominal 0.2", and a center-to-center spacing of 1.67" minimum and 2.35" maximum.

PANEL DIMENSIONS

Tactile Units are available in 2'x3', 2'x4', 2'x5', 3'x4' and 3'x5' sizes. Tactile Units may also be custom configured to accommodate specific project requirements. Tactile Units measure 0.25" nominal thickness and feature embedment ribs at 3" on center.

MATERIAL

A homogenous glass and carbon reinforced composite which is colorfast and UV stable. Truncated domes are fiberglass reinforced for enhanced durability. The color of the Tactile Unit is uniform throughout and does not rely on any type of paint coating to achieve color stability. Standard colors include: Federal Yellow, Brick Red, Clay Red, Safety Red, Blue, Dark Gray and Black.

INSTALLATION

Tactile Units are to be used on new curb ramp locations. The Tactile Units can be pre-filled with concrete and set in place or pressed into place in the freshly poured concrete.

PHYSICAL CHARACTERISTICS

Compressive Strength	28,900 psi	ASTM D 695
Flexural Strength	29,300 psi	ASTM D 790
Water Absorption	.07%	ASTM D 570
Slip Resistance	1.18 Dry, 1.05 Wet	ASTM C 1028
Flame Spread Index	20	ASTM E 84
Salt Spray	No Change (200 hours)	ASTM B 117
Chemical Stain Testing	No Deterioration	ASTM 1308
Abrasion Resistance	549	ASTM C 501
Accelerated Weathering	Delta E<5.0 (2,000 hours)	ASTM G 155
Tensile Strength	11,600 psi	ASTM D 638
Load Bearing at 16,000 lbs.	No Damage	AASHTO-H20
Freeze/Thaw/Heat	No Disintegration	ASTM C 1026

5-Year Warranty

Cast-In-Place Tactile

24"x36" Tile

1.67" Dome Spacing

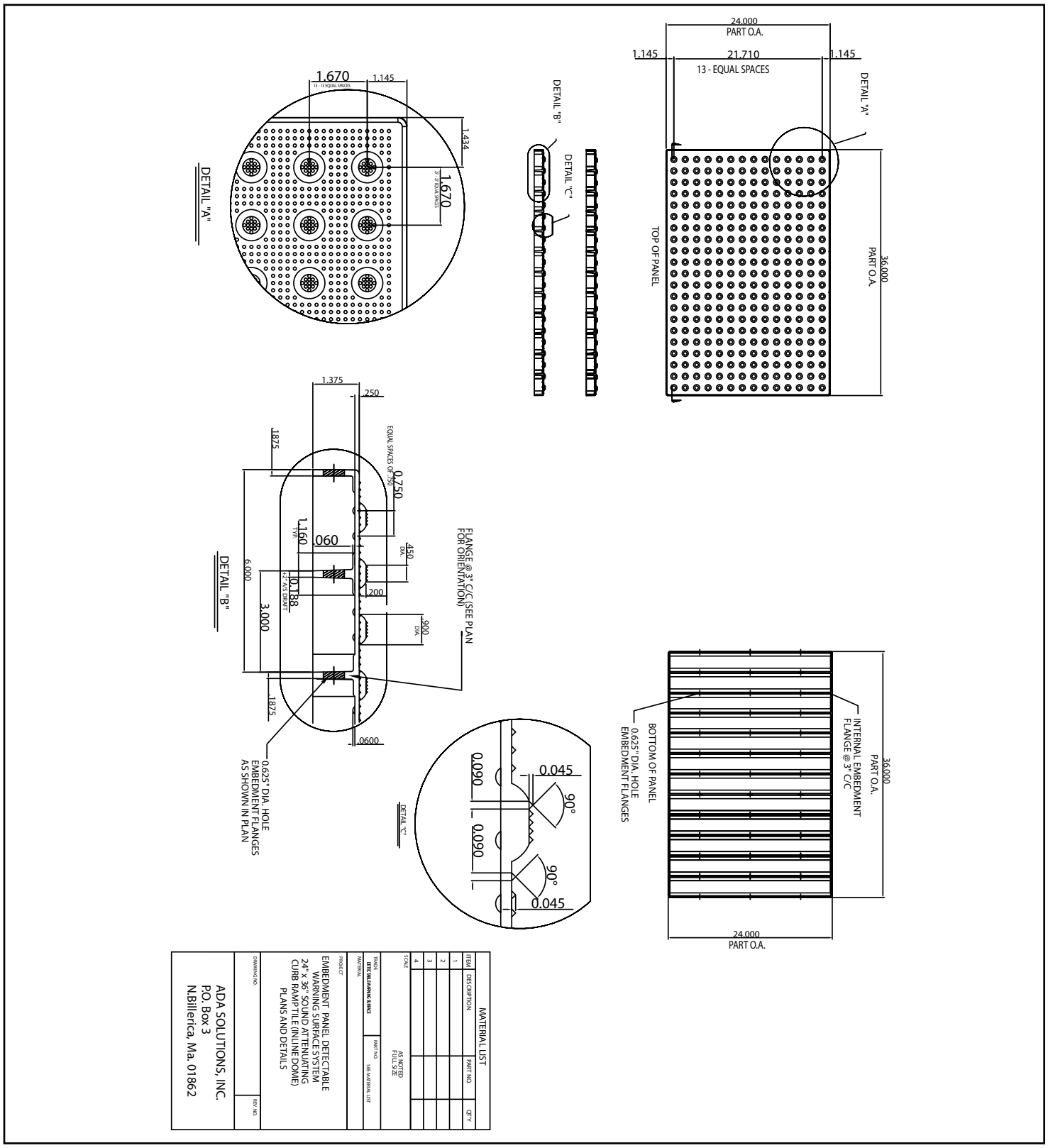

ITEM	DESCRIPTION	PART NO.	QTY
1.			
2.			
3.			
4.			

MATERIAL LIST

SCALE: AS NOTED FULL SIZE

TRADE: DETECTABLE WARNING SURFACE

PART NO: SEE MATERIAL LIST

MATERIAL

PROJECT: EMBEDMENT PANEL DETECTABLE WARNING SURFACE SYSTEM 24" x 36" SOUND ATTENUATING CURB RAMP TILE (IN-LINE DOME) PLANS AND DETAILS

DRAWING NO.

REV. NO.

ADA SOLUTIONS, INC.
P.O. Box 3
N.Billerica, Ma. 01862

Cast-In-Place Tactile

24″x36″ Tile

2.35″ Dome Spacing

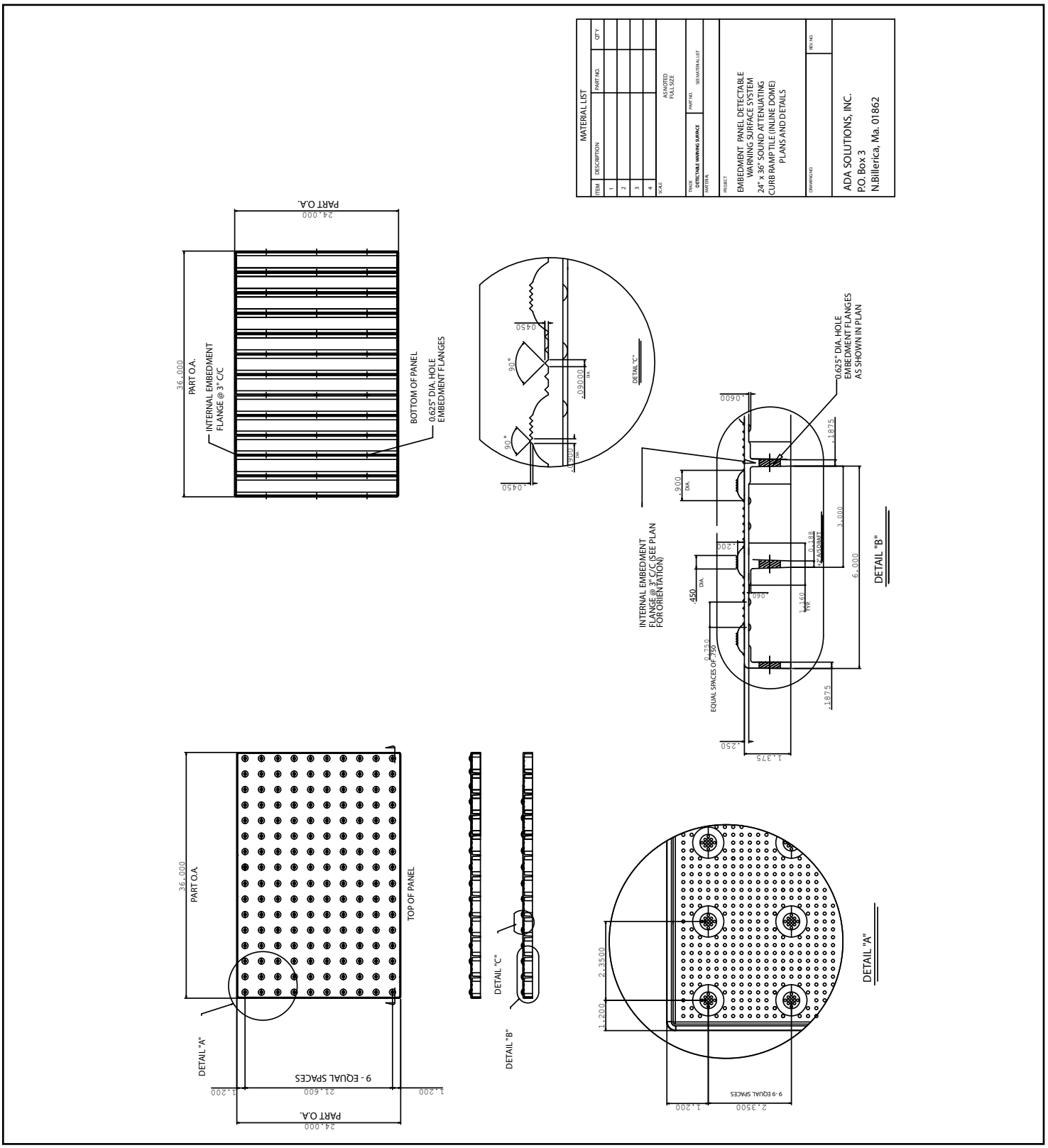

Cast-In-Place Tactile

24″x48″

1.67″ Dome Spacing

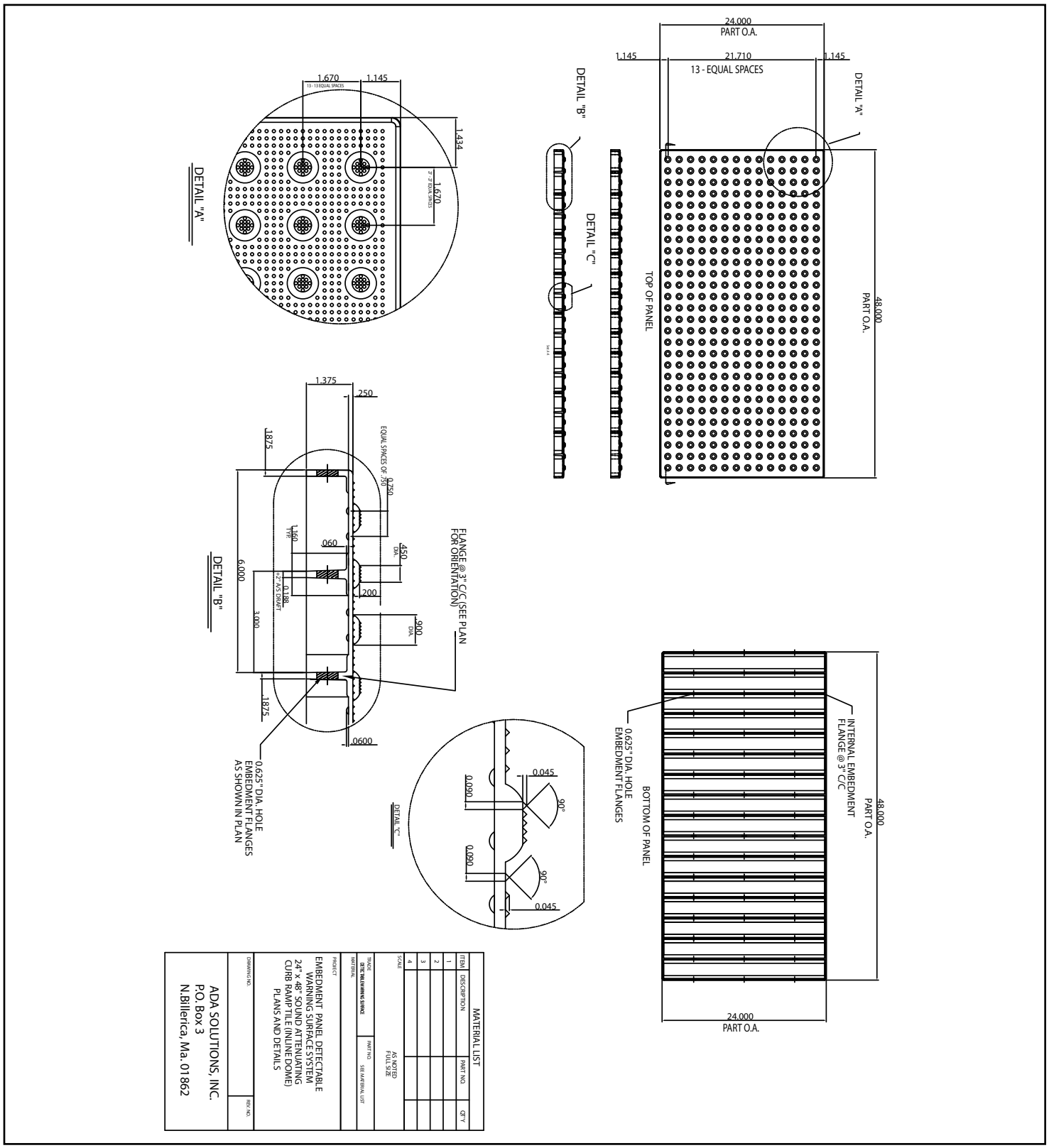

Cast-In-Place Tactile

24″x48″ Tile

2.35″ Dome Spacing

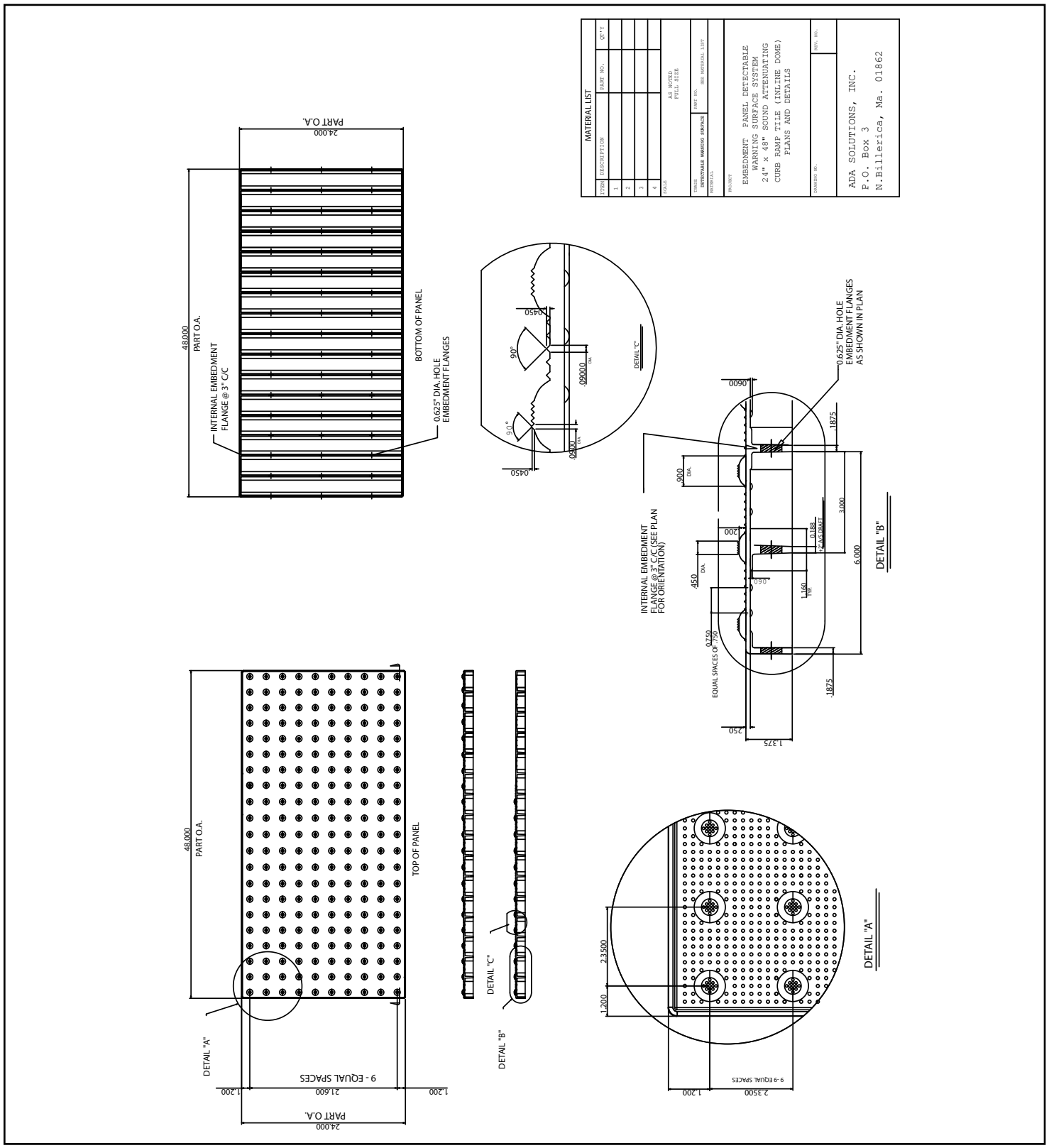

Cast-In-Place Tactile

24″x60″ Tile

1.67″ Dome Spacing

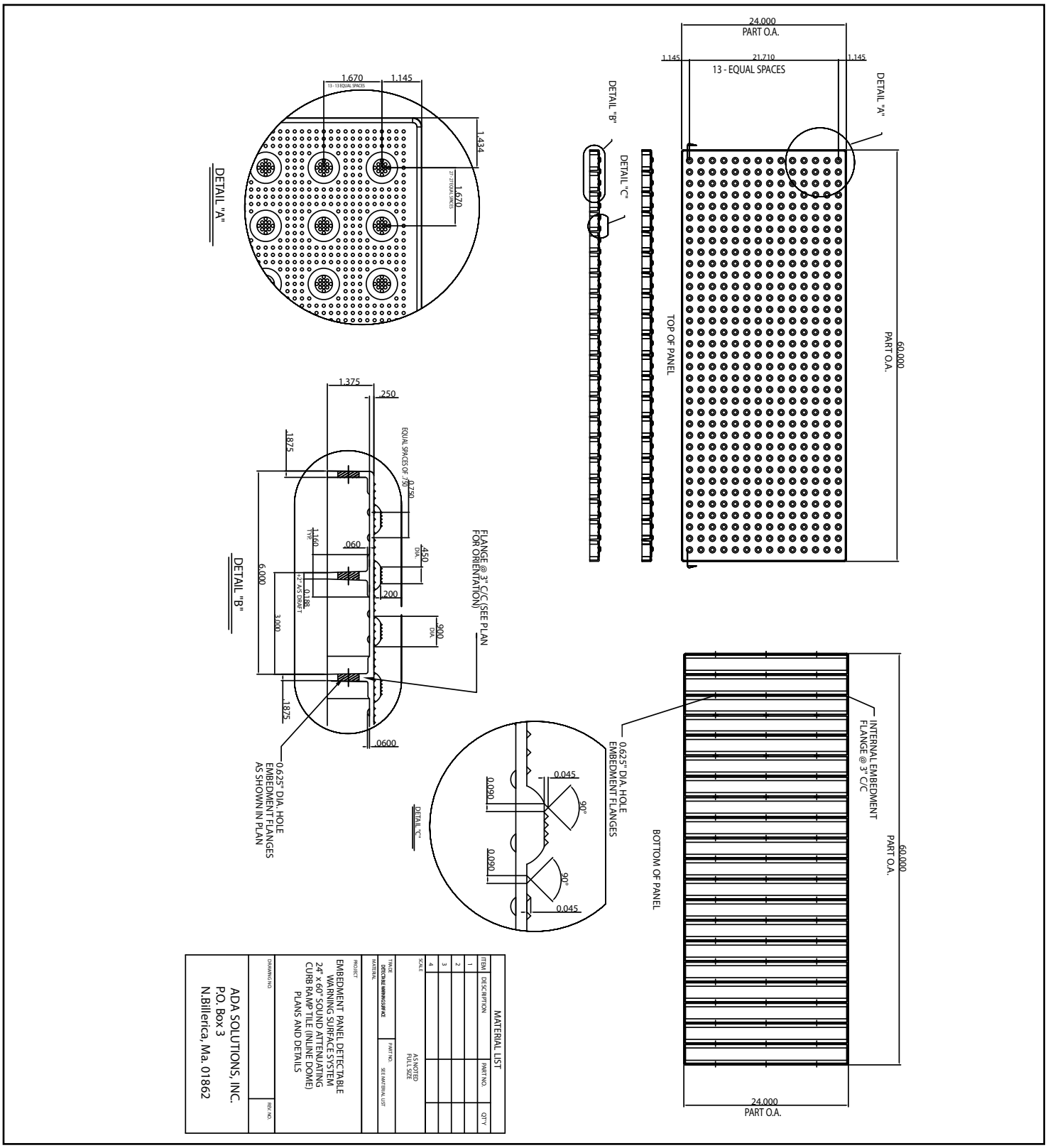

ITEM	DESCRIPTION	PART NO.	QTY.
1			
2			
3			
4			

MATERIAL LIST

SCALE: AS NOTED FULL SIZE

TITLE: DETECTABLE WARNING SURFACE

PART NO.: SEE MATERIAL LIST

MATERIAL:

PROJECT:
EMBEDMENT PANEL DETECTABLE WARNING SURFACE SYSTEM
24" x 60" SOUND ATTENUATING CURB RAMP TILE (INLINE DOME)
PLANS AND DETAILS

DRAWING NO.

REV. NO.

ADA SOLUTIONS, INC.
P.O. Box 3
N.Billerica,Ma. 01862

Cast-In-Place Tactile

24″x60″ Tile

2.35″ Dome Spacing

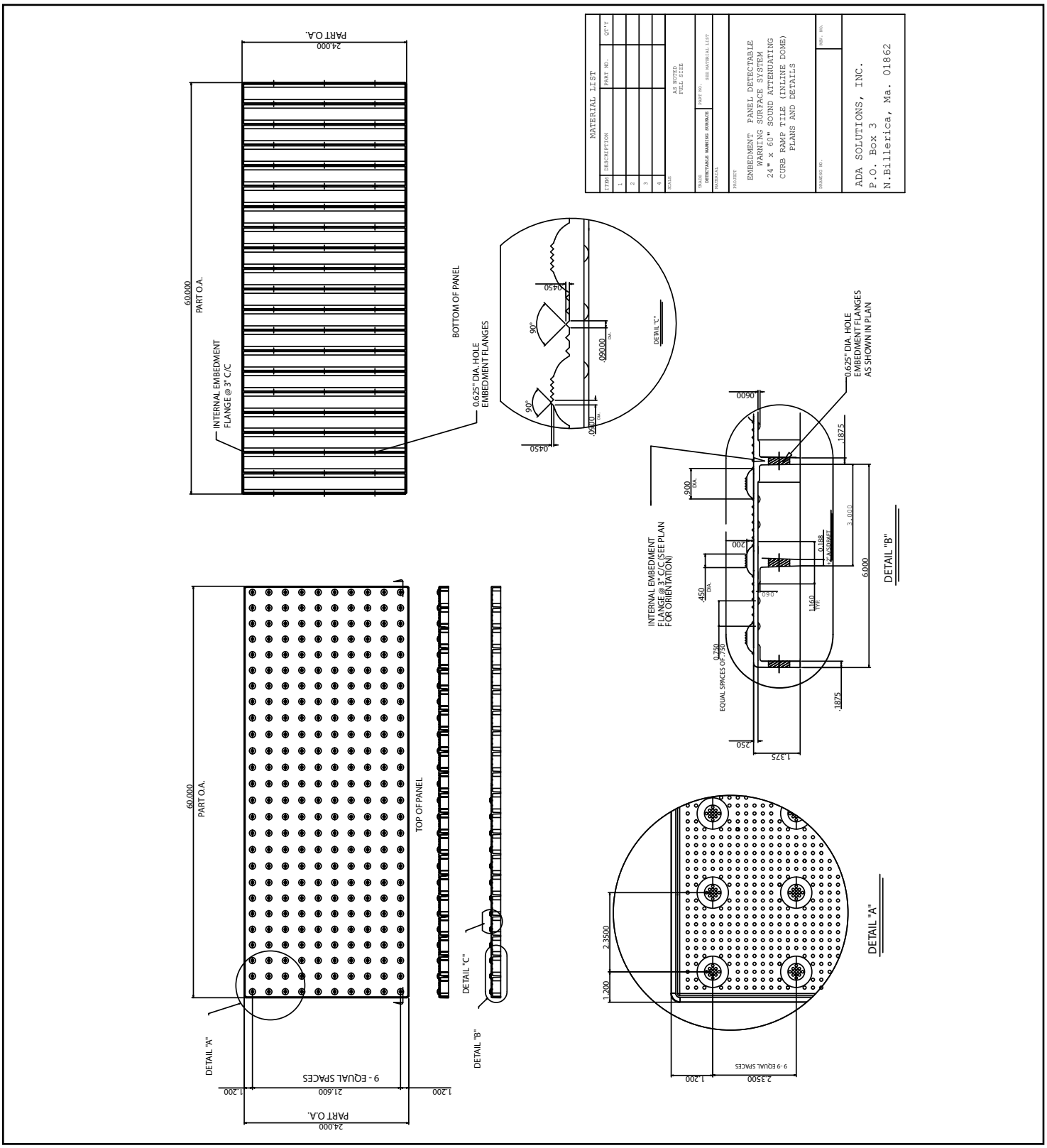

Cast-In-Place Tactile

36"x48" Tile

1.67" Dome Spacing

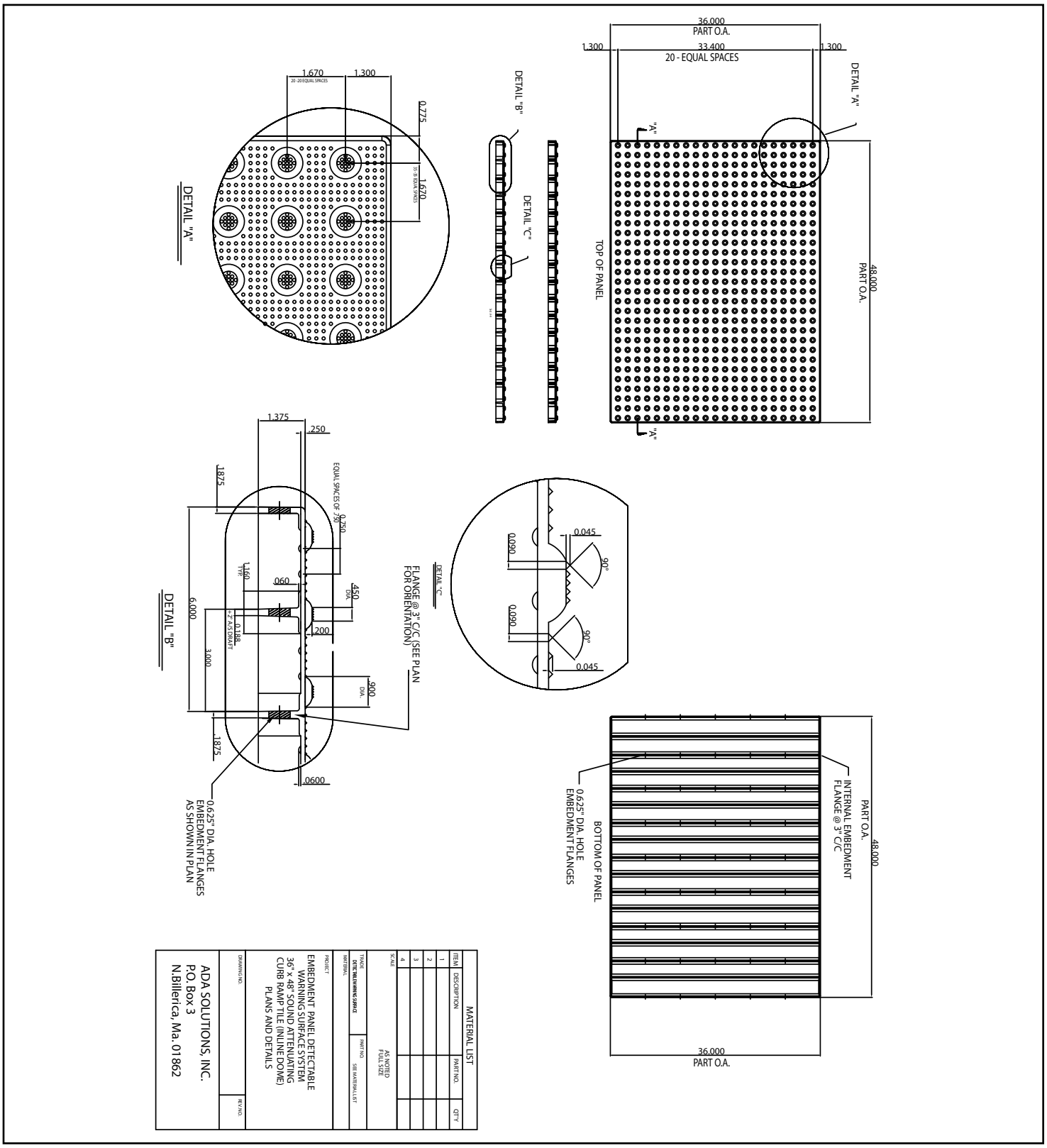

ITEM	DESCRIPTION	PART NO.	QTY
1			
2			
3			
4			

MATERIAL LIST

SCALE: AS NOTED FULL SIZE

TRADE: DETECTABLE WARNING SURFACE

MATERIAL: PART NO: SEE MATERIAL LIST

PROJECT: EMBEDMENT PANEL DETECTABLE WARNING SURFACE SYSTEM 36" x 48" SOUND ATTENUATING CURB RAMP TILE (INLINE DOME) PLANS AND DETAILS

DRAWING NO.

REV NO.

ADA SOLUTIONS, INC.
P.O. Box 3
N.Billerica, Ma. 01862

Cast-In-Place Tactile

36″x60″ Tile

1.67″ Dome Spacing

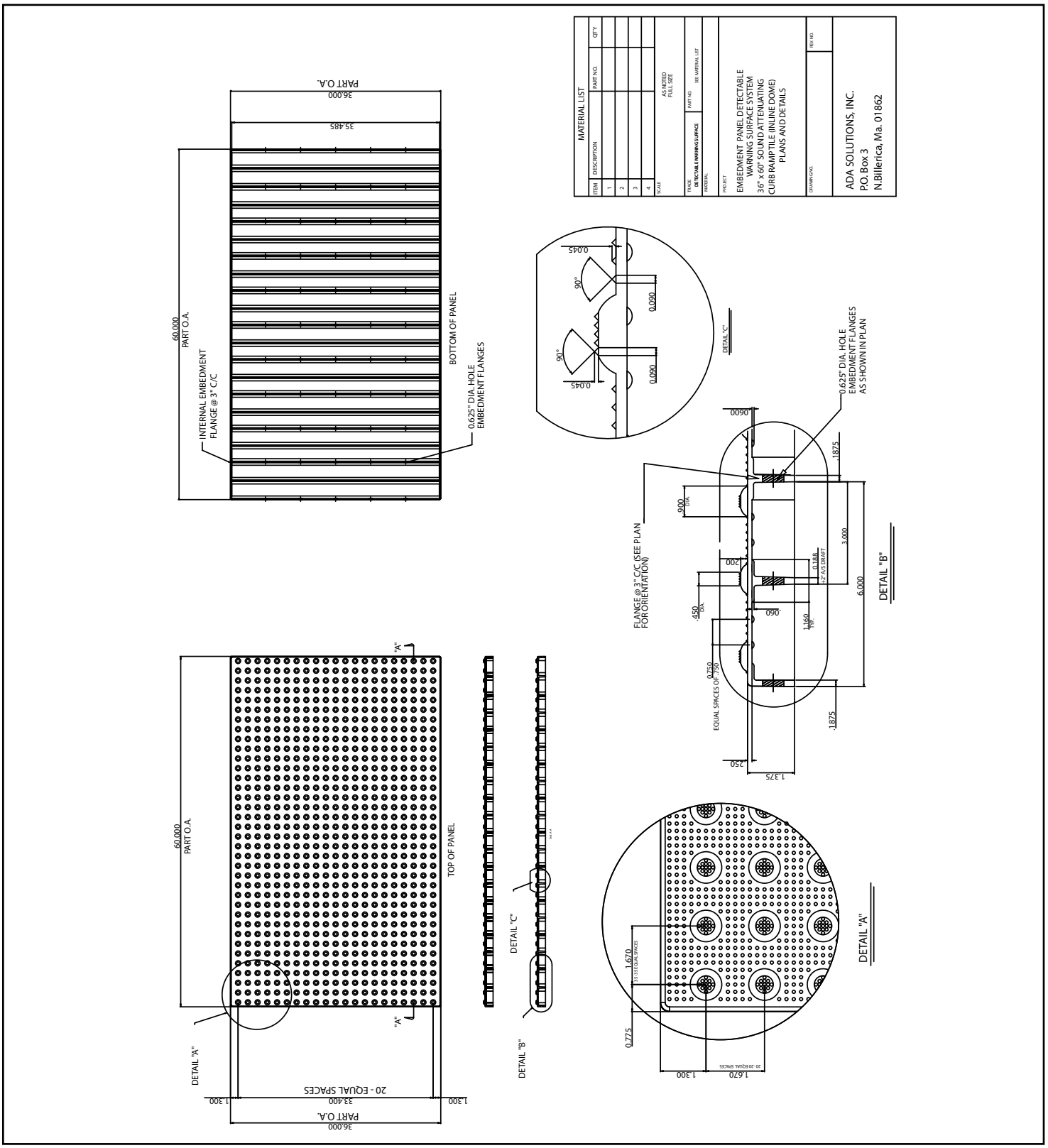

Summary

To view the entire report published by the Access Board go to http://www.access-board.gov/rowdraft.htm

REVISED DRAFT GUIDELINES:

Accessible Public Rights-Of-Way (11/23/05)

R304 Detectable Warning Surfaces

R304.1 General. Detectable warnings shall consist of a surface of truncated domes aligned in a square or radial grid pattern and shall comply with R304.

R304.1.1 Dome Size. Truncated domes in a detectable warning surface shall have a base diameter of 23 mm (0.9 in) minimum to 36 mm (1.4 in) maximum, a top diameter of 50 percent of the base diameter minimum to 65 precent of the base diameter maximum, and a height of 5 mm (0.2 in).

R304.1.2 Dome Spacing. Truncated domes in a detectable warning surface shall have a center-to-center spacing of 41 mm (1.6 in) minimum and 61 mm (2.4 in) maximum, and a base-to-base spacing of 17 mm (.65 in) minimum, measured between the most adjacent domes.

R304.1.3 Contrast. Detectable warning surfaces shall contrast visually with adjacent gutter, street or highway, or walkway surface, either light-on-dark, or dark-on-light.

R304.1.4 Size. Detectable warning surfaces shall extend 610 mm (24 in) minimum in the direction of travel and the full width of the curb ramp (exclusive of flares), the landing, or the blended transition.

R304.2 Location and Alignment

R304.2.1 Perpendicular Curb Ramps. Where both ends of the bottom grade break complying with R303.3.4 are 1.5 m (5.0 ft) or less from the back of the curb, the detectable warning shall be located on the ramp surface at the bottom grade break. Where either end of the bottom grade break is more than 1.5 m (5.0 ft) from the back of the curb, the detectable warning shall be located on the lower landing.

R304.2.2 Landings and Blended Transitions. The detectable warning shall be located on the landing or blended transition at the back of the curb.

R304.2.3 Alignment. The rows of truncated domes in a detectable warning surface shall be aligned to be perpendicular or radial to the grade break between the ramp, landing, or blended transition and the street.

THE ONLY COMPLETE DETECTABLE WARNING AND WAYFINDING SOLUTION FOR THE VISUALLY IMPAIRED

ADA SOLUTIONS, INC.

ADA SOLUTIONS, INC.

Wherever you go...
There we are™

- INDUSTRY LEADING SERVICE, DELIVERY AND PRICE
- ONE PIECE APPLICATION
- TIME-SAVING INSTALLATION
- CAST-IN-PLACE REPLACEABLE
- RADIUS REPLACEABLE (WET-SET)
- RADIUS SURFACE MOUNT
- SURFACE MOUNT (RETROFIT)
- CAST IN PLACE (WET-SET)
- ADAAG COMPLIANT
- AVAILABLE STANDARD SIZES
  2′x3′ • 2′x4′ • 2′x5′ • 3′x4′ • 3′x5′ • 2′x33¼″
- UNIFORM COLOR THROUGHOUT