Set-up Instructions

1981, 1982 Models ATC250R

AMERICAN HONDA MOTOR CO., INC.
100 WEST ALONDRA BOULEVARD, GARDENA, CALIFORNIA 90247

WARNING **WARNING** **WARNING** **WARNING**

SET-UP AND PRE-DELIVERY SERVICE MUST BE PERFORMED BY AN AUTHORIZED HONDA MOTORCYCLE DEALER. Proper set-up and pre-delivery service is essential to rider safety and reliability of the motorcycle. When a customer takes delivery of his brand new motorcycle, he expects it to be in excellent running condition. There are few things that will cause greater customer dissatisfaction than poor preparation of a new motorcycle. An error or oversight made by the mechanic assembling and servicing a new unit can easily result in faulty operation, damage to the machine, or even injury to the rider.

THIS ISSUE OF THE ATC250R SET-UP INSTRUCTIONS REPLACES THE 1981 MODEL ATC250R SET-UP INSTRUCTIONS DATED 1/81. REMOVE AND DESTROY SUPERSEDED SET-UP INSTRUCTIONS.

1982 MODEL SHOWN; 1981 MODEL SIMILAR

NOTES:

- *All steps apply to both the 1981 and 1982 models unless otherwise noted.*
- *Right and left are determined from the riders's view.*

Date of Issue: 7/81

SET-UP INSTRUCTION
REVISED PAGES

Pages Affected	Orig. Issue Date	Rev. Date
1 through 31	7/81	Original

Remove and destroy superseded pages.

Pay special attention to warnings, cautions, and notes.

WARNING means hazards or unsafe practices which could cause severe personal injury or death.

CAUTION: means hazards or unsafe practices which could cause minor personal injury or product or property damage.

NOTE: gives helpful information.

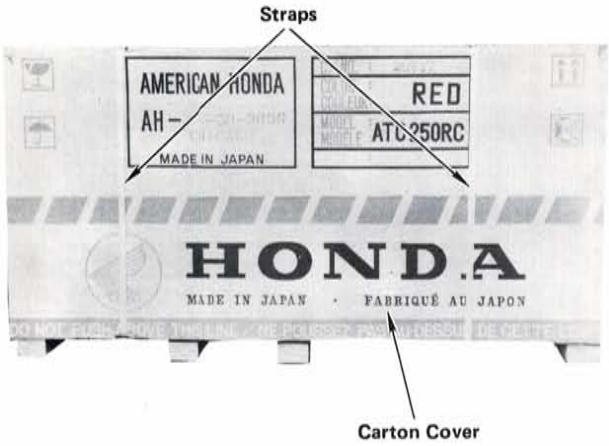

STEP 1—Cut straps and remove carton cover by lifting it up.

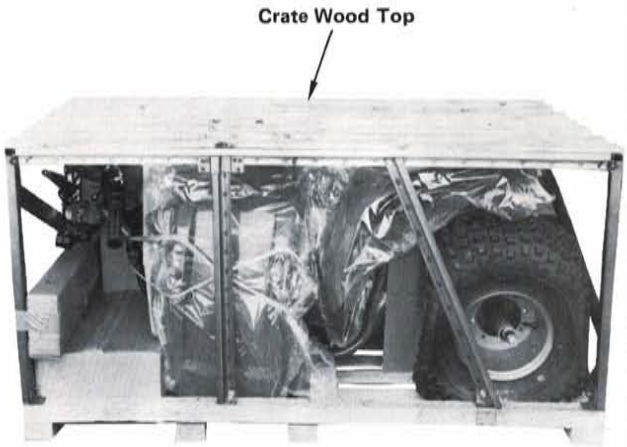

STEP 2—Remove crate wood top.

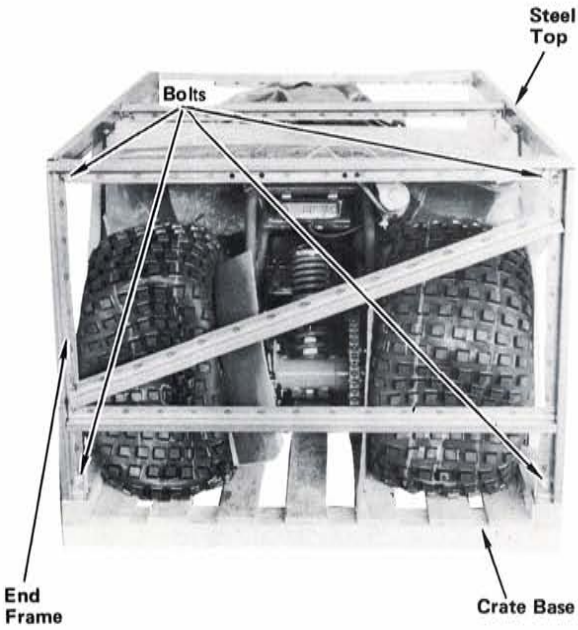

STEP 3—Remove four bolts attaching crate rear end frame to steel top and crate base. Discard bolts and crate end.

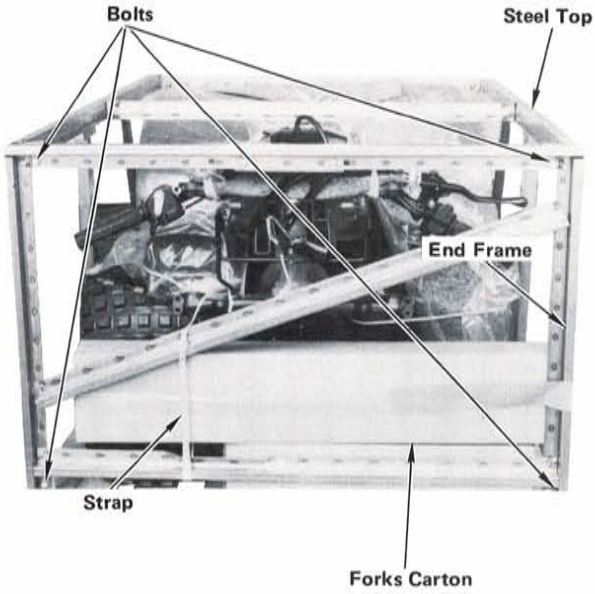

STEP 4—Remove four bolts attaching crate front end frame to steel top and crate base. On 1982 Model, cut strap holding forks carton.

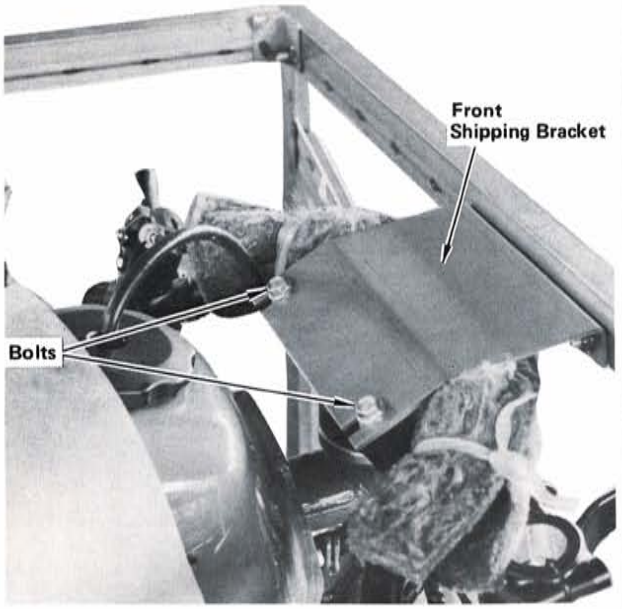

STEP 5—Remove two bolts attaching front shipping bracket to handlebar lower holders. Discard bolts and crate end.

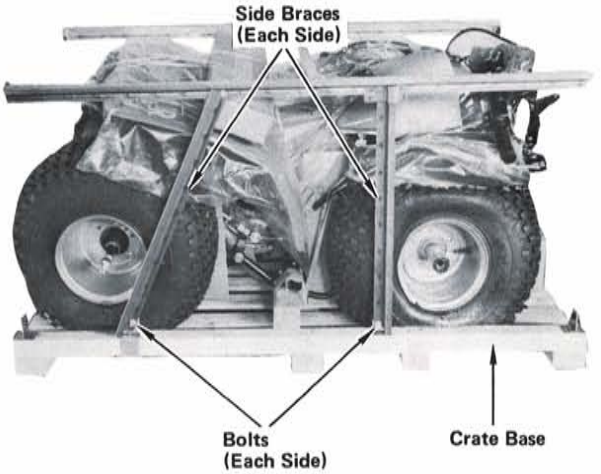

STEP 6—Remove bolts attaching side braces to crate base. Carefully lift off steel top. Discard side braces, steel top and bolts.

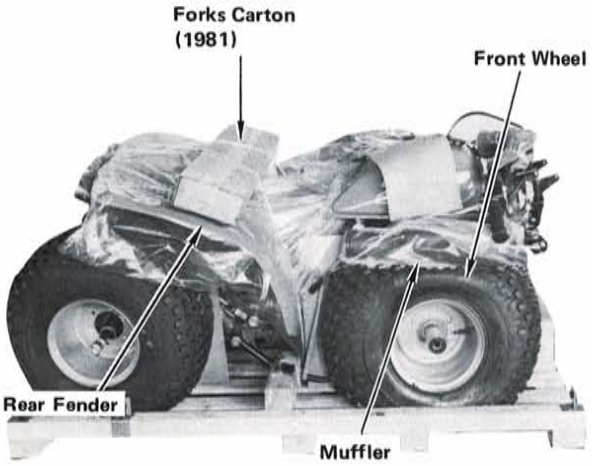

STEP 7—Remove front wheel, sub muffler, front forks carton, and rear fender by removing rubber bands.

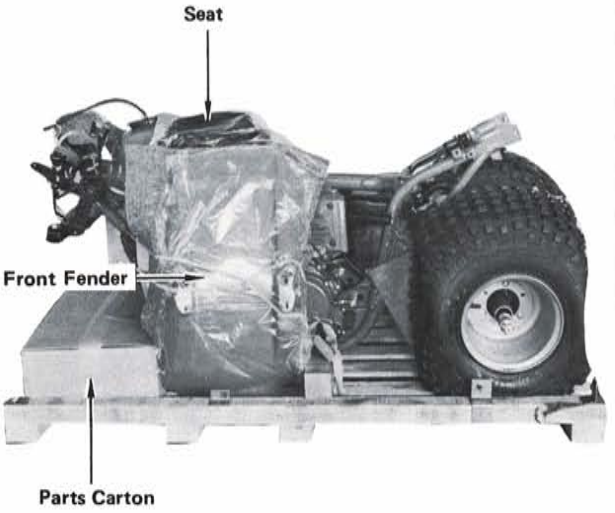

STEP 8—Remove seat and front fender by removing rubber bands. Remove parts carton from crate base.

7/81

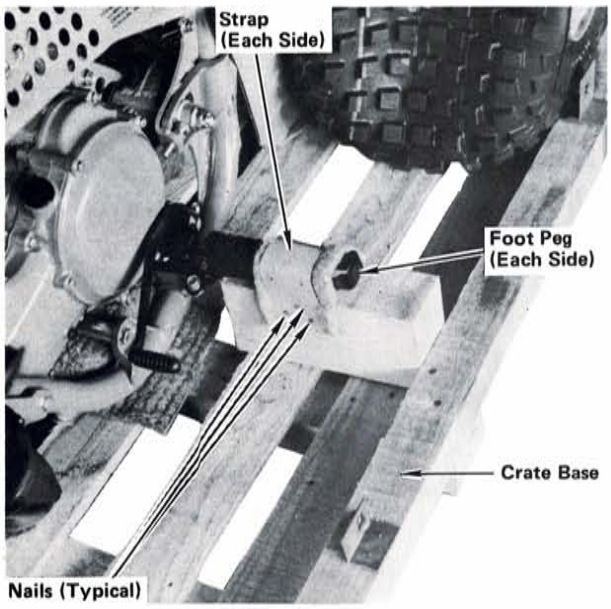

STEP 9—Remove nails and strap from each foot peg. Discard strap and nails.

STEP 10—Remove rear wheels.

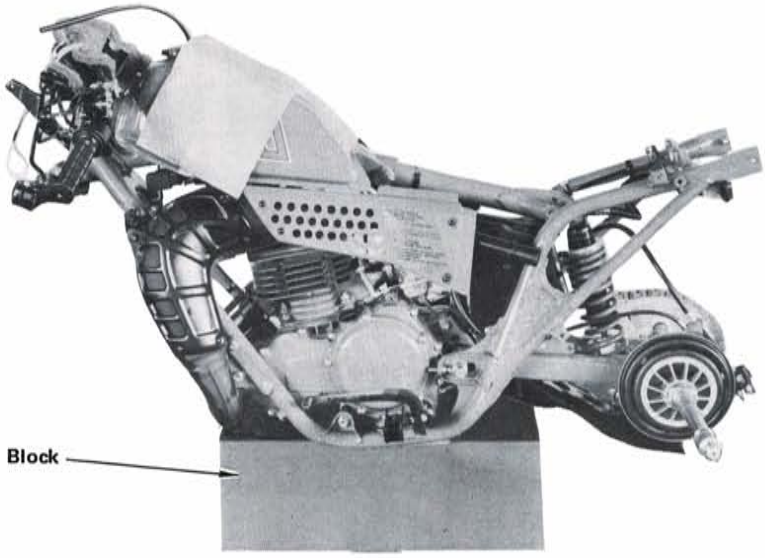

STEP 11—Carefully remove vehicle from crate base using two people and support on a padded block centered under engine as shown.

CAUTION: The vehicle can easily be tipped over until it is resting on front and rear wheels.

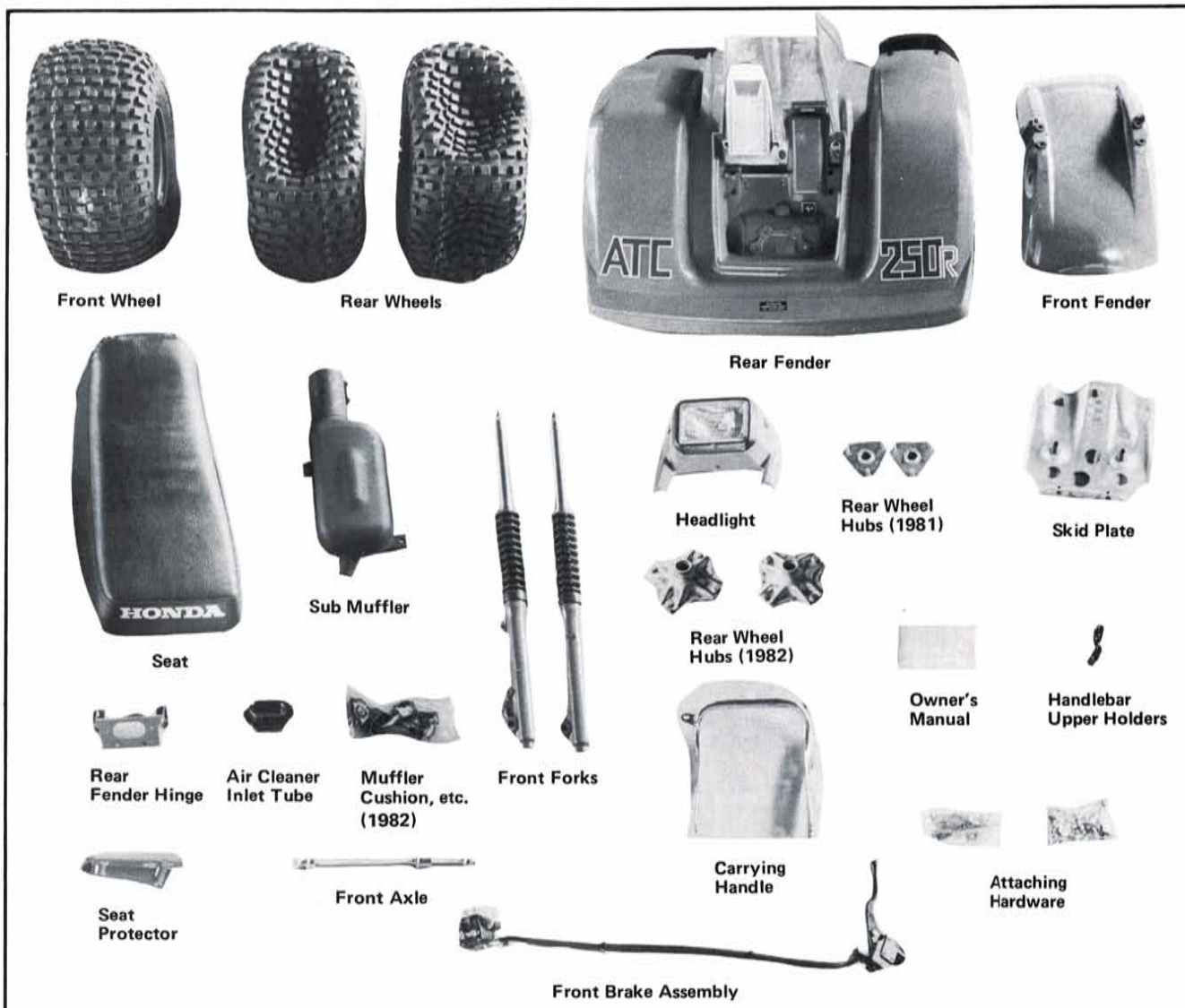

STEP 12—Unpack remaining loose parts and check against this illustration. Report any damaged or missing parts immediately to American Honda Motor Co., Inc., 100 West Alondra Blvd., Gardena, California 90247.

Damaged or Missing Parts

Identify missing parts by referring to the "Loose Parts List" at the end of the set-up. Order parts through normal parts ordering procedures.

It is necessary to differentiate between parts lost or damaged in transit, and parts left out by the factory.

- For parts lost or damaged in transit, file a SHIPPING DAMAGE CLAIM.
- For parts left out by the factory, file a WARRANTY CLAIM W.O.2.

Refer to the Warranty Policy and Procedures Manual (SO 945) under **Shipping Damage and Crate Shortage** for further information.

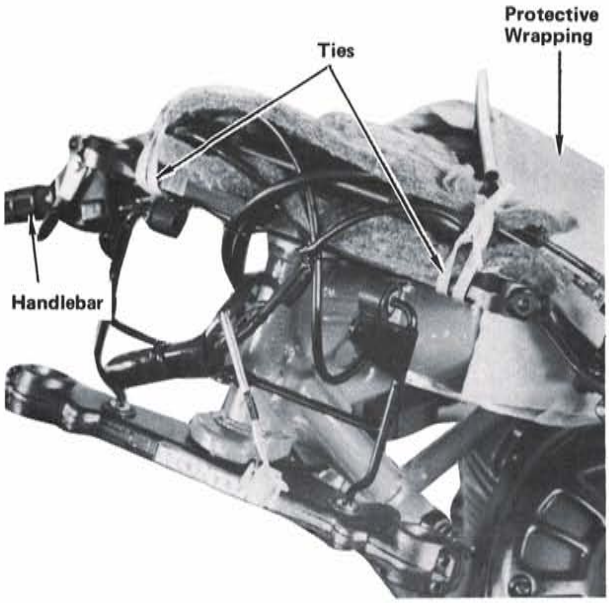

STEP 13—Remove ties holding handlebar to upper fork bridge. Remove protective wrapping from fuel tank.

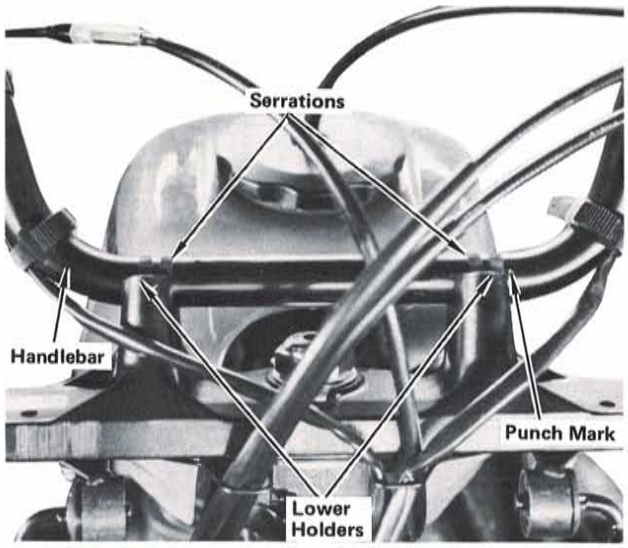

STEP 14—Position handlebar on lower holders with serrations aligned with holders and punch mark on handlebar aligned with top of holders.

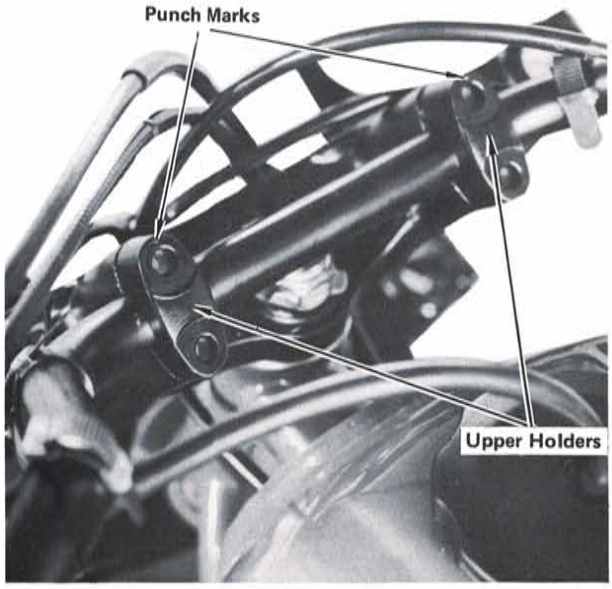

STEP 15—Position upper holders on handlebar with punch mark on holders forward.

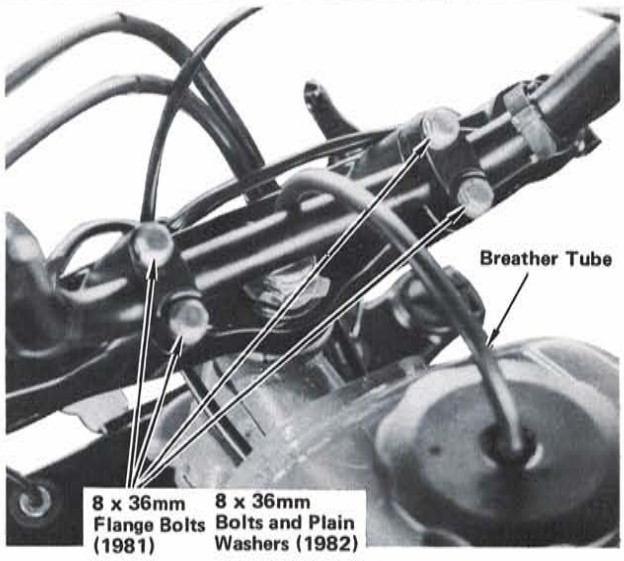

STEP 16—Install upper holders using four 8 x 36 mm flange bolts. (8 x 36 mm bolts and plain washers on 1982 Model.) Tighten forward bolts to specified torque first, then tighten rear bolts to same torque. Insert end of fuel cap breather tube into hole in steering stem.

Torque specification:

2.1 kg-m (16 lb-ft)

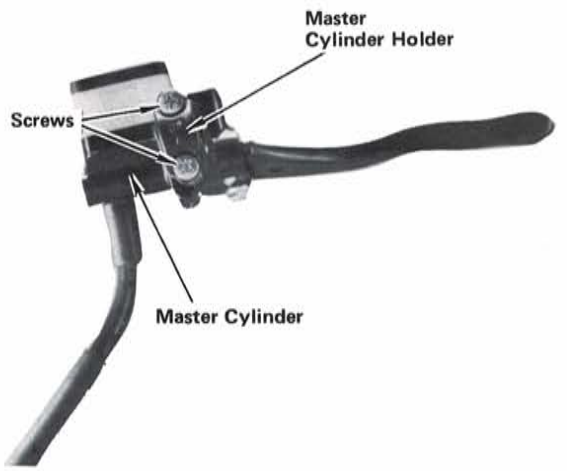

STEP 17—Remove and retain 6 mm oval head screws attaching master cylinder holder to master cylinder.

NOTE: Do not turn master cylinder upside down or air could enter brake line.

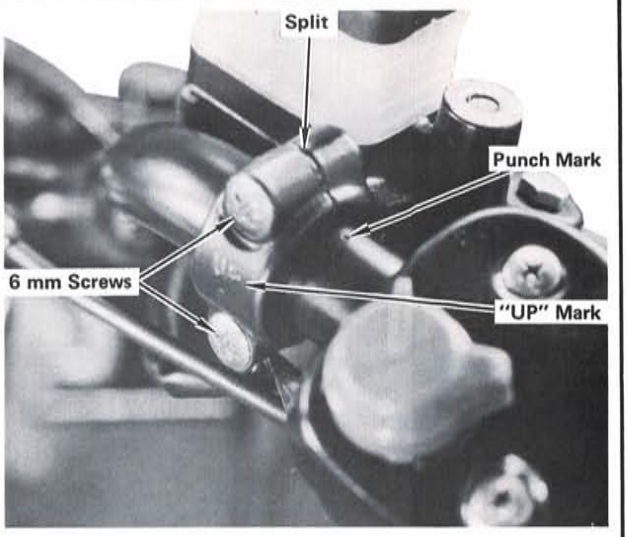

STEP 18—Position master cylinder and holder on right handlebar with split aligned with punch mark on handlebar. Install holder with "UP" mark up using two 6 mm oval head screws removed in Step 17. Tighten screws to specified torque. Check brake fluid level in reservoir.

Torque specification:
1.0 kg-m (8 lb-ft)

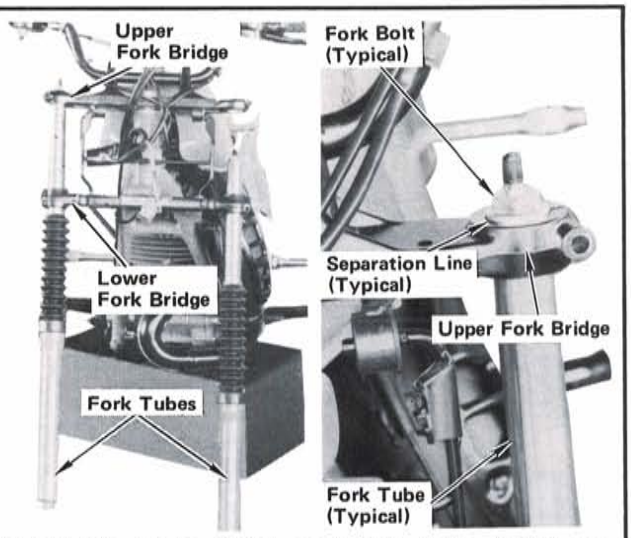

STEP 19—Slide right and left fork tubes up through holes in lower and upper fork bridges. (Right fork has two front brake caliper mounting holes on lower end.) Position fork tubes so the separation line between fork bolt and fork tube is flush with top of upper fork bridge. Check that valve caps are installed.

1981 MODEL ONLY

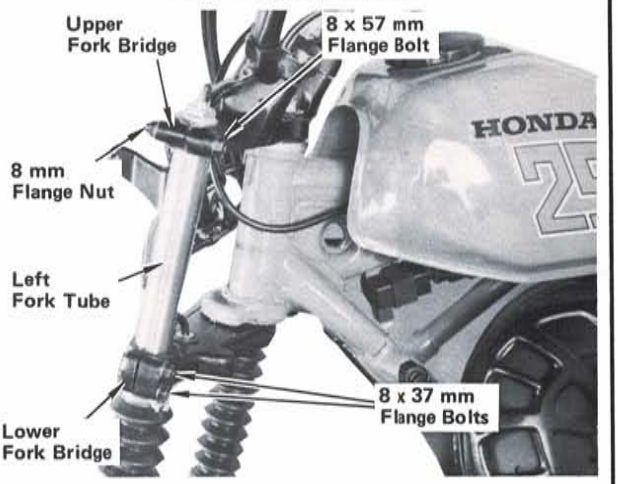

STEP 20—Secure left fork tube using a black 8 x 57 mm flange bolt and black flange nut through upper fork bridge from the rear, and two 8 x 37 mm black flange bolts through lower fork bridge from the rear. Tighten bolt in upper fork bridge to specified torque first, then tighten bolts in lower fork bridge to same torque.

Torque specification:
2.7 kg-m (19 lb-ft)

1981 MODEL ONLY

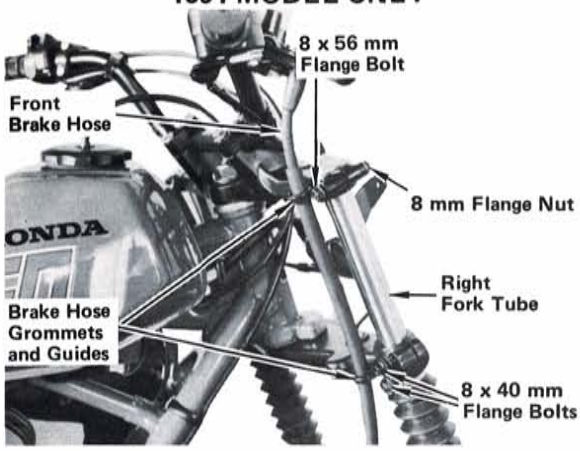

STEP 21—Position front brake hose guides over brake hose grommets and install guides where shown using a black 8 x 56 mm flange bolt and black flange nut inserted through guide and upper fork bridge from the rear, and two black 8 x 40 mm flange bolts through lower guide and lower fork bridge as shown. Tighten bolt in upper fork bridge to specified torque first, then tighten bolts in lower fork bridge to same torque.

Torque specification:
2.7 kg-m (19 lb-ft)

1982 MODEL ONLY

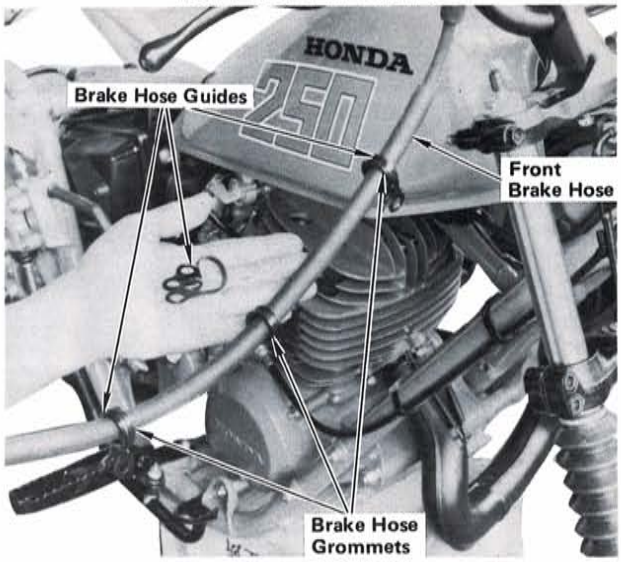

STEP 22—Position front brake hose guides over brake hose grommets where shown.

1982 MODEL ONLY

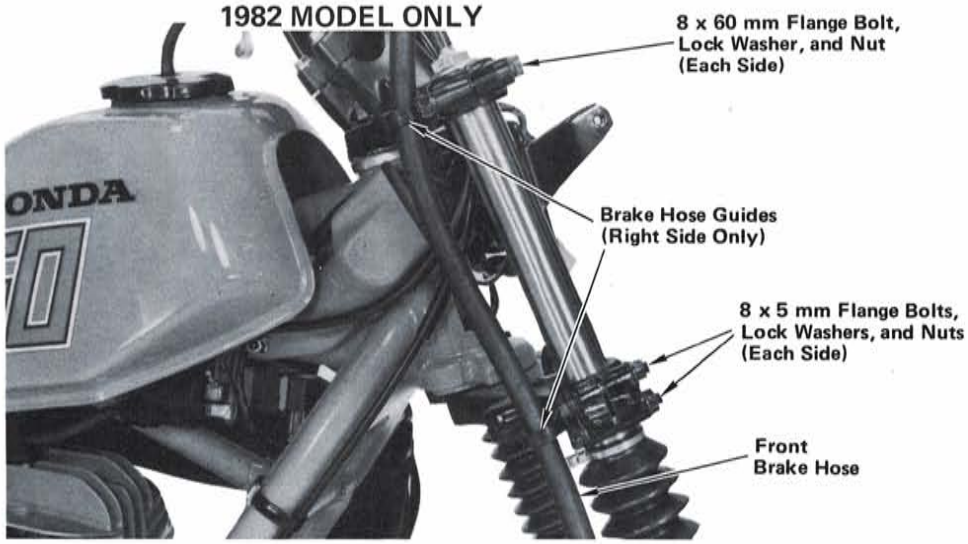

STEP 23—Secure left and right fork tubes by inserting a black 8 x 60 mm flange bolt through upper fork bridge from the rear, with an 8 mm lock washer, plain washer, and nut at the front. Insert two black 8 x 50 mm flange bolts through lower fork bridge from the rear, with 8 mm lock washers and nuts at the front. Install brake hose guides under heads of right fork bridge bolts as shown. Tighten bolts in upper fork bridge to specified torque first, then tighten bolts in lower fork bridge to same torque.

Torque specification:
2.7 kg-m (19 lb-ft)

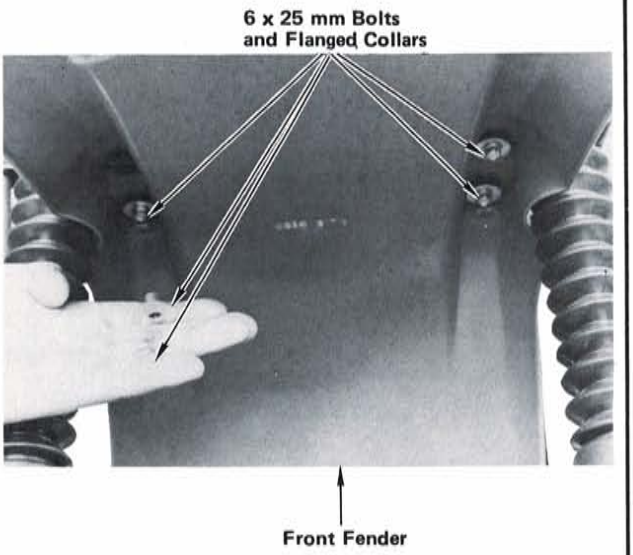

STEP 24—Position front fender between front fork legs with wide end towards front and install using four flanged collars and 6 x 25 mm bolts (flange bolts on 1981 Model). Tighten bolts to specified torque.

Torque specification:
1.0 kg-m (8 lb-ft)

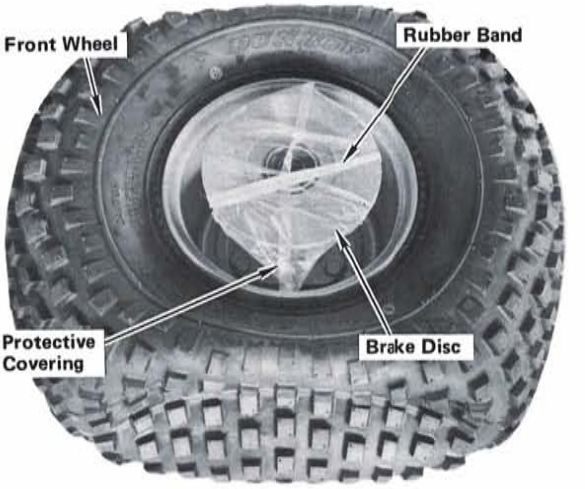

STEP 25—Remove protective covering from front brake disc by removing rubber band. Thoroughly clean front brake disc using a good quality degreasing agent. Wipe with a clean cloth. Check that grease seal is full of clean grease.

STEP 26—Remove separator from between front brake pads. Remove all preservative and residue from each brake pad.

NOTE: Do not operate front brake lever until brake caliper is installed on front wheel.

STEP 27—Inflate all three tires to specified tire pressure.

Tire pressure: 2.2 psi.

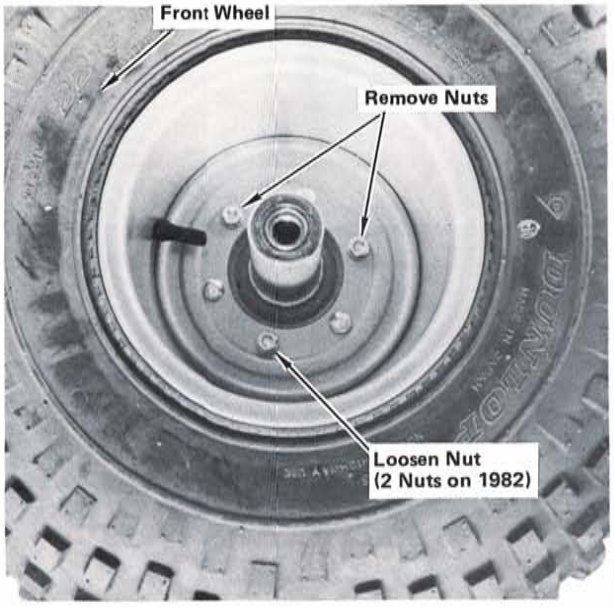

STEP 28—Remove any two adjacent hub nuts from front wheel and loosen remaining nut(s) to allow installation of front wheel. Retain nuts for reinstallation.

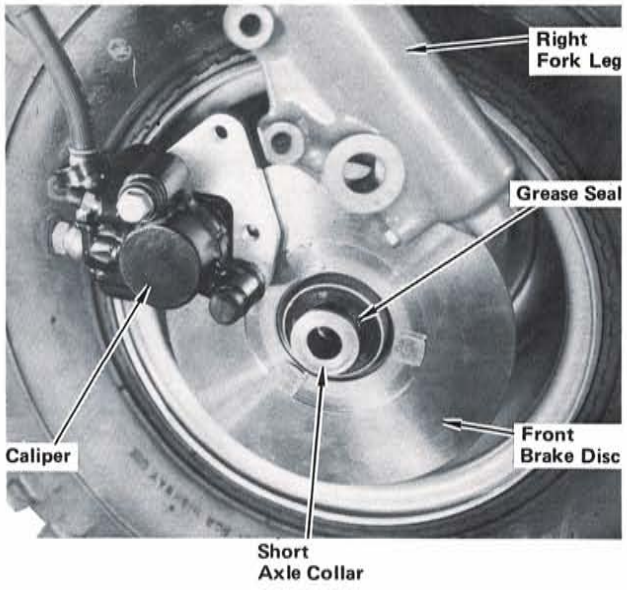

STEP 29—Position front wheel between front fork legs with brake disc on right. Slip front brake caliper onto disc. Insert short axle collar into right grease seal and long axle collar into left grease seal.

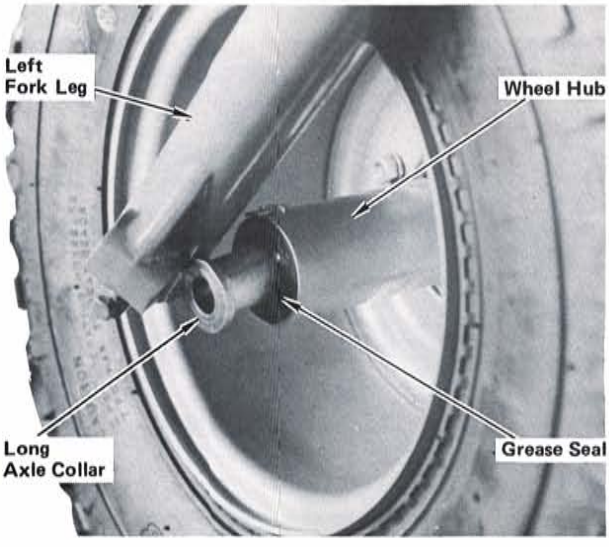

STEP 30—Insert front axle from right side, through right fork leg, short axle collar, wheel hub, long axle collar, and left fork leg.

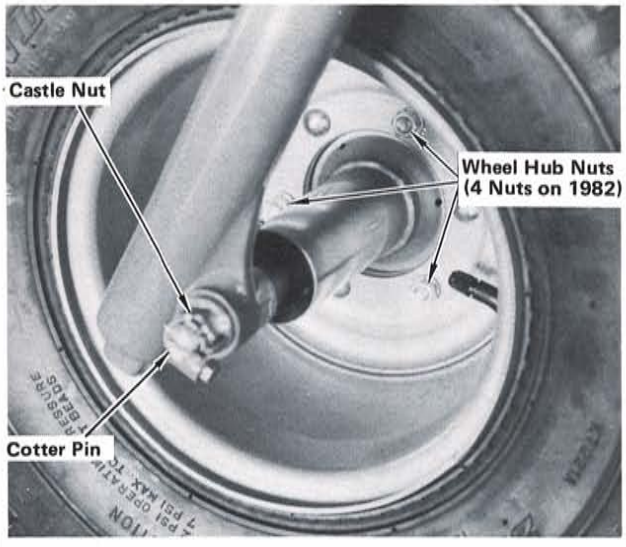

STEP 31—Install castle nut on end of front axle and tighten to specified torque. Insert cotter front wheel hub nuts removed in Step 28 and tighten all wheel hub nuts to specified torque.

Torque specifications:

Castle nut: 9.0 kg-m (70 lb-ft)

Hub nuts: 2.1 kg-m (16 lb-ft)

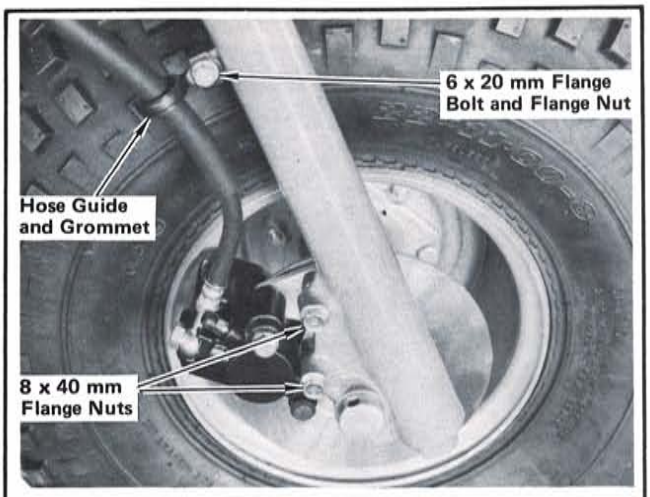

STEP 32—Align holes of front brake caliper with holes in fork leg and install caliper using two 8 x 40 mm flange bolts. Tighten bolts to specified torque. Install front brake hose guide on brake hose grommet and install as shown using a 6 x 20 mm flange bolt and flange nut. Tighten nut to specified torque.

Torque specifications:

1981 Model	1982 Model
8 mm bolts: 2.7 kg-m (19 lb-ft)	2.2 kg-m (16 lb-ft)
6 mm nut: 1.2 kg-m (9 lb-ft)	1.0 kg-m (8 lb-ft)

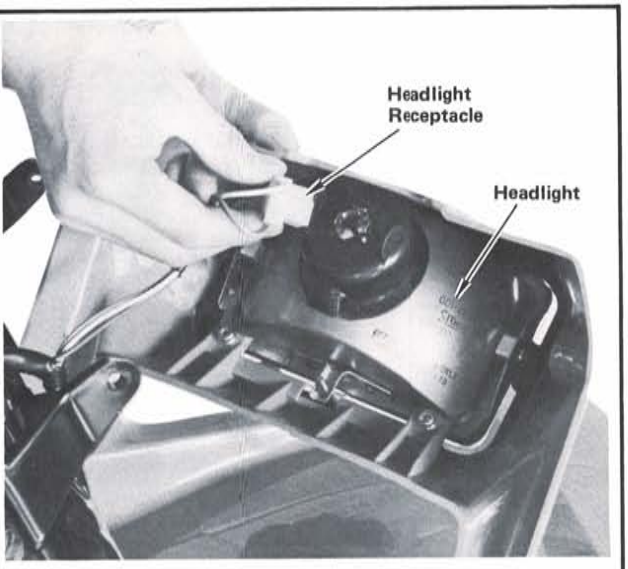

STEP 33—Connect headlight receptacle to headlight.

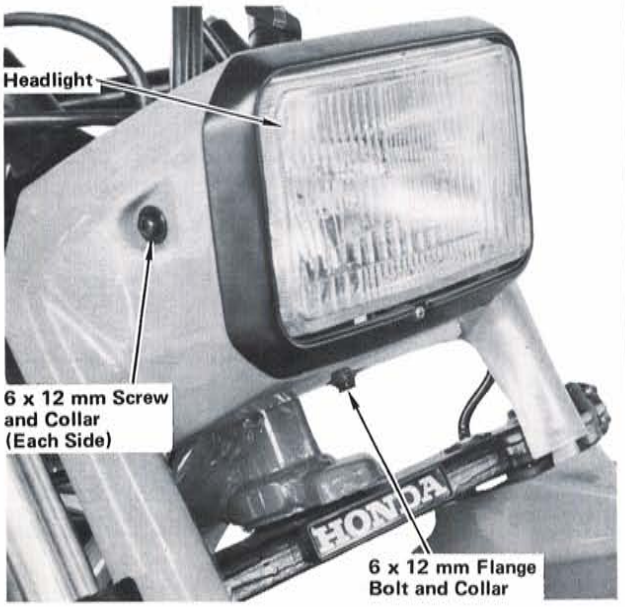

STEP 34—Position headlight case over headlight mount brackets and install using a 6 x 12 mm screw and collar on each side and a 6 x 12 mm flange bolt and collar at the bottom. Tighten all screws and bolt securely.

1981 MODEL ONLY

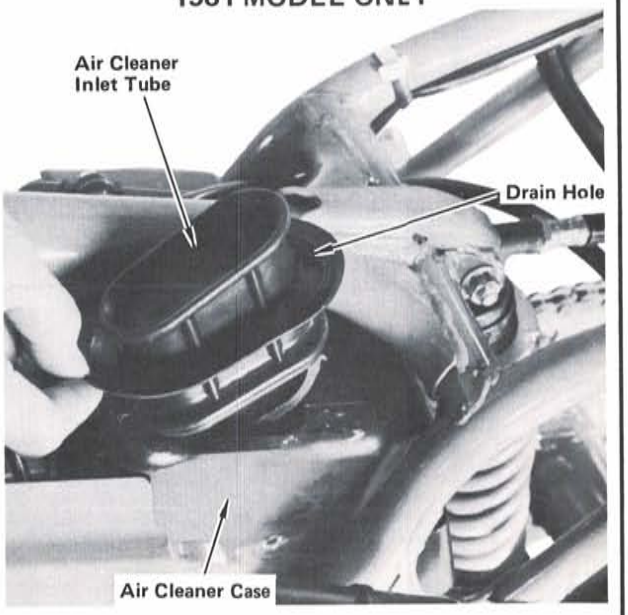

STEP 35—Insert air cleaner inlet tube into hole of air cleaner case with water drain hole towards rear as shown. Make sure that edge of case is properly seated in groove of inlet tube.

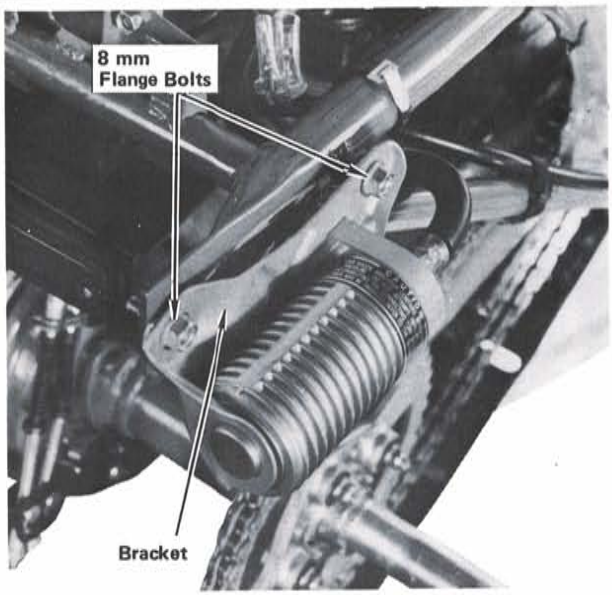

STEP 36—Remove and retain two 8 mm flange bolts attaching shock absorber reservoir bracket to frame.

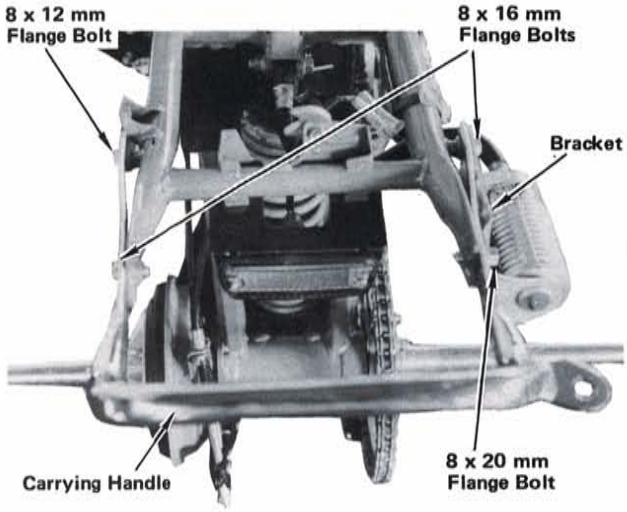

STEP 37—Position carrying handle over frame as shown (between frame and reservoir bracket on right side) and install using an 8 x 12 mm flange bolt on left front, two 8 x 16 mm flange bolts on left rear and right front, and an 8 x 20 mm flange bolt on right rear. Tighten all four bolts to specified torque.

Torque specification:
2.1 kg-m (16 lb-ft)

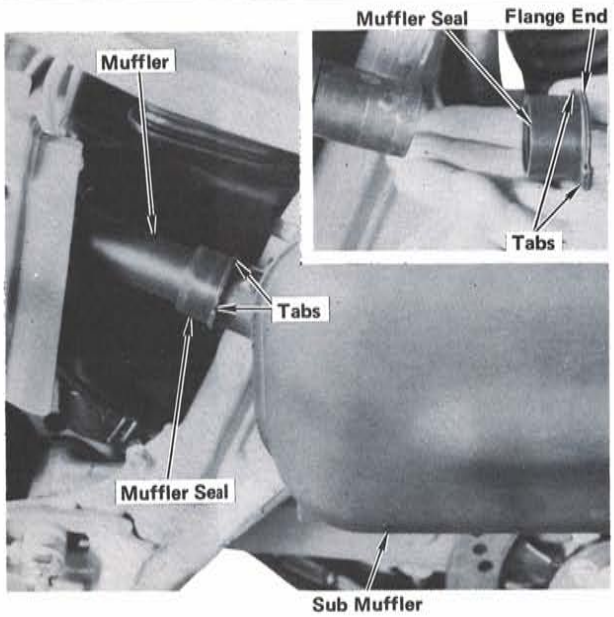

STEP 38—Slip muffler seal and sub muffler over end of muffler as shown, being sure flange end is towards rear and tabs on flange are horizontal as shown.

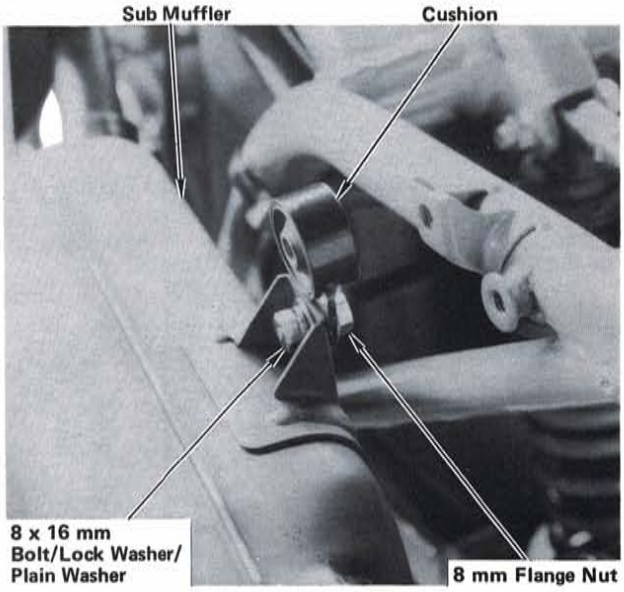

STEP 39—Position upper sub muffler cushion on the inside of sub muffler as shown and loosely install using an 8 x 16 mm bolt/lock washer/plain washer and flange nut.

NOTE: Install cushion with offset towards frame as shown.

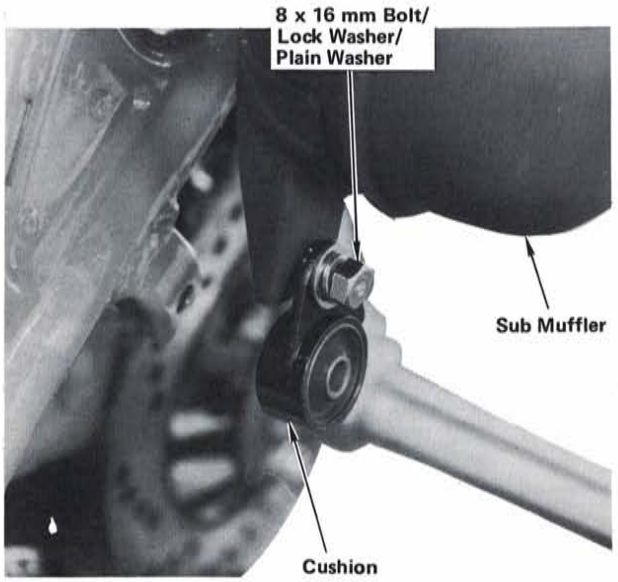

STEP 40—Position lower sub muffler cushion on outside of sub muffler as shown and loosely install using an 8 x 16 mm bolt/lock washer/plain washer.

NOTE: Install cushion with offset towards frame as shown.

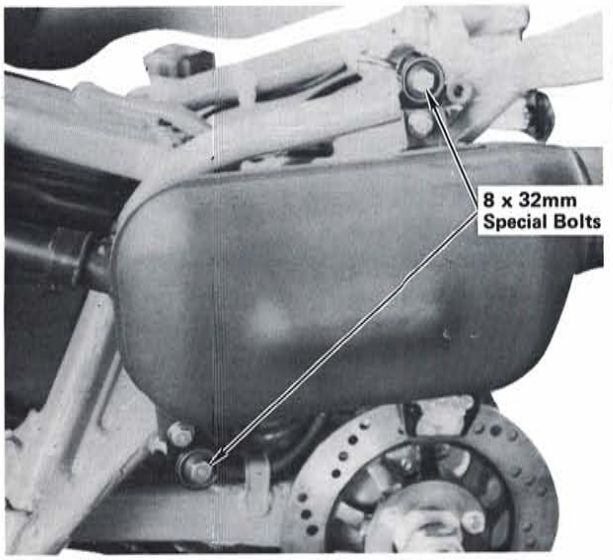

STEP 41—Attach sub muffler cushions to frame as shown using 8 x 32 mm special bolts. Tighten all sub muffler 8 mm bolts to specified torque.

Torque specification:
2.1 kg-m (16 lb-ft)

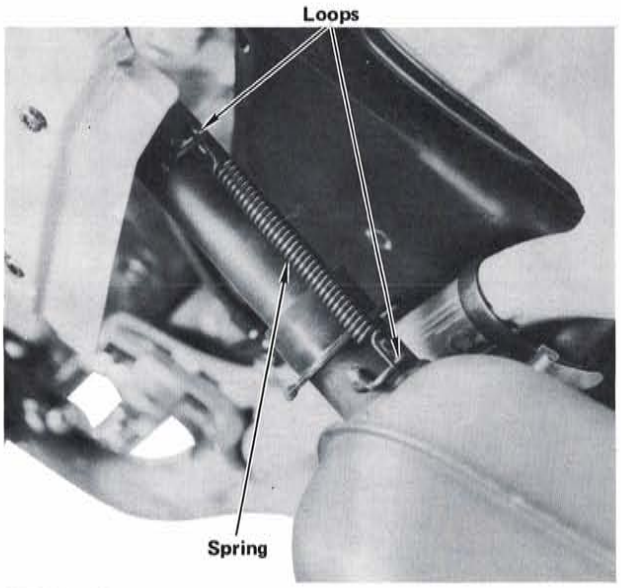

STEP 42—Install spring between muffler loops as shown.

1981 MODEL ONLY

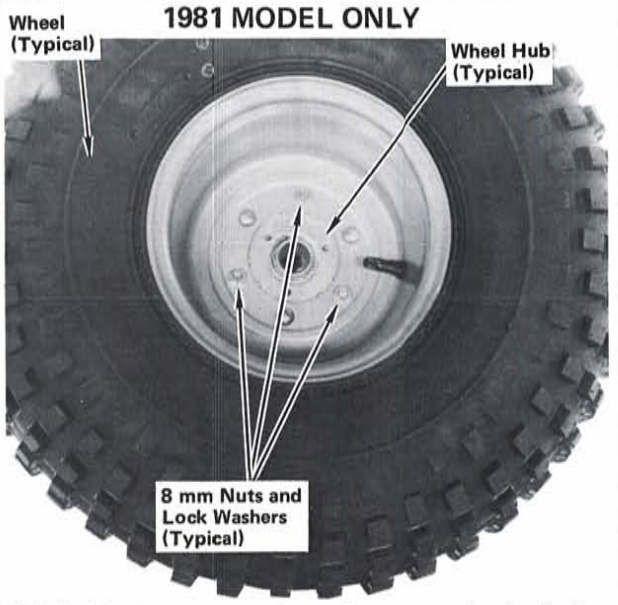

STEP 43—Insert studs of rear wheel hubs through holes in rear wheels as shown and install using an 8 mm nut and lock washer on each stud. Tighten nuts to specified torque. (Note that nuts are on valve stem side.)

Torque specification:
2.1 kg-m (16 lb-ft)

1981 MODEL ONLY

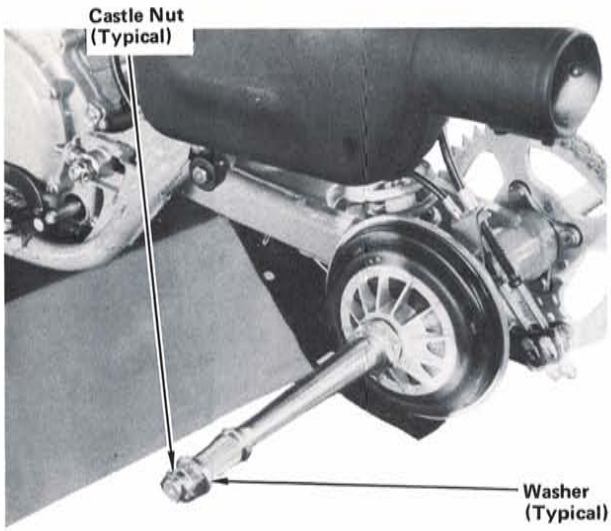

STEP 44—Remove and retain rear axle nuts and washers.

1981 MODEL ONLY

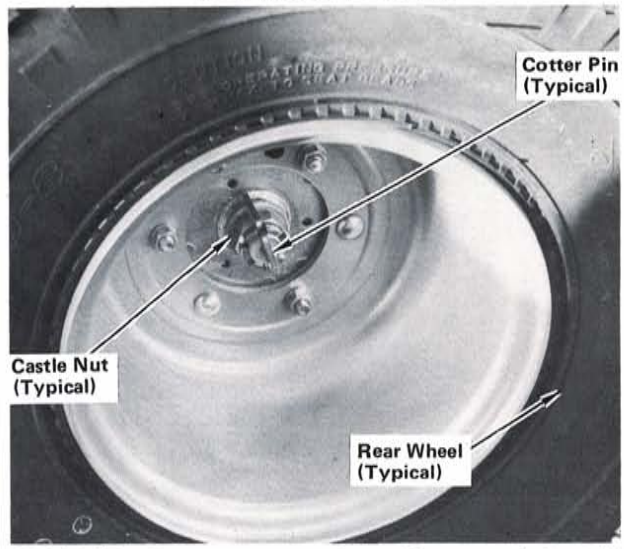

STEP 45—Grease rear axle splines and install rear wheels, with valve stems to the outside, using castle nuts and washers retained in Step 44. Tighten both nuts equally to specified torque. Install a cotter pin in each and spread ends as shown.

Torque specification:
9.0 kg-m (68 lb-ft)

1982 MODEL ONLY

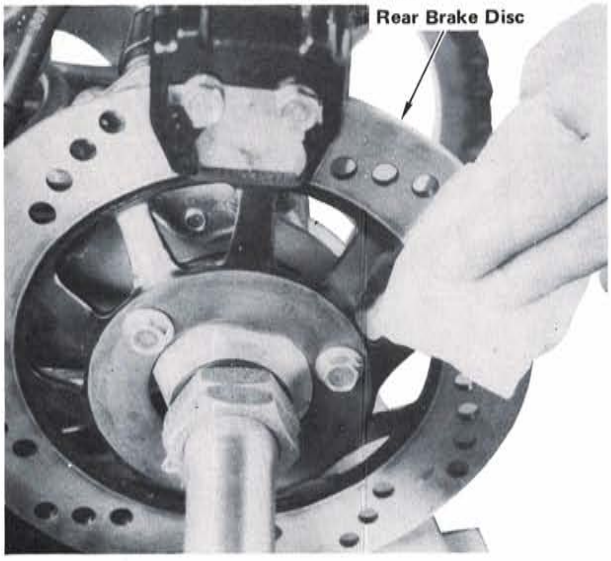

STEP 46—Thoroughly clean both sides of rear brake disc using a good quality degreasing agent. Wipe with a clean cloth.

1982 MODEL ONLY

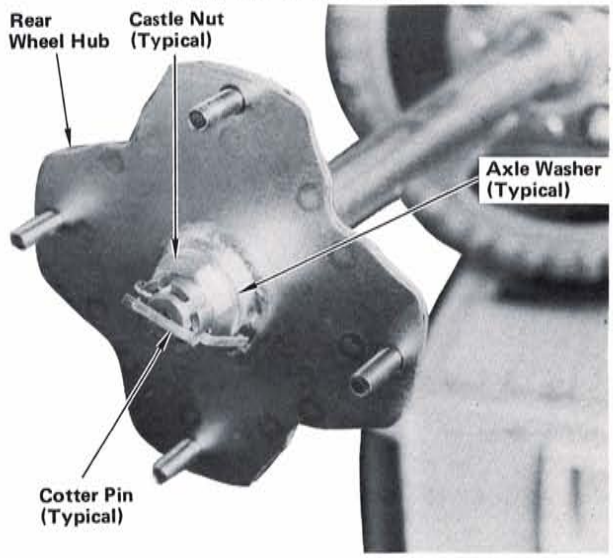

STEP 47—Grease rear axle splines and install rear wheel hubs on rear axle as shown using a castle nut and axle washer for each end. Tighten castle nuts to specified torque. Install a cotter pin in each and spread ends as shown.

Torque specification:
9.0 kg-m (68 lb-ft)

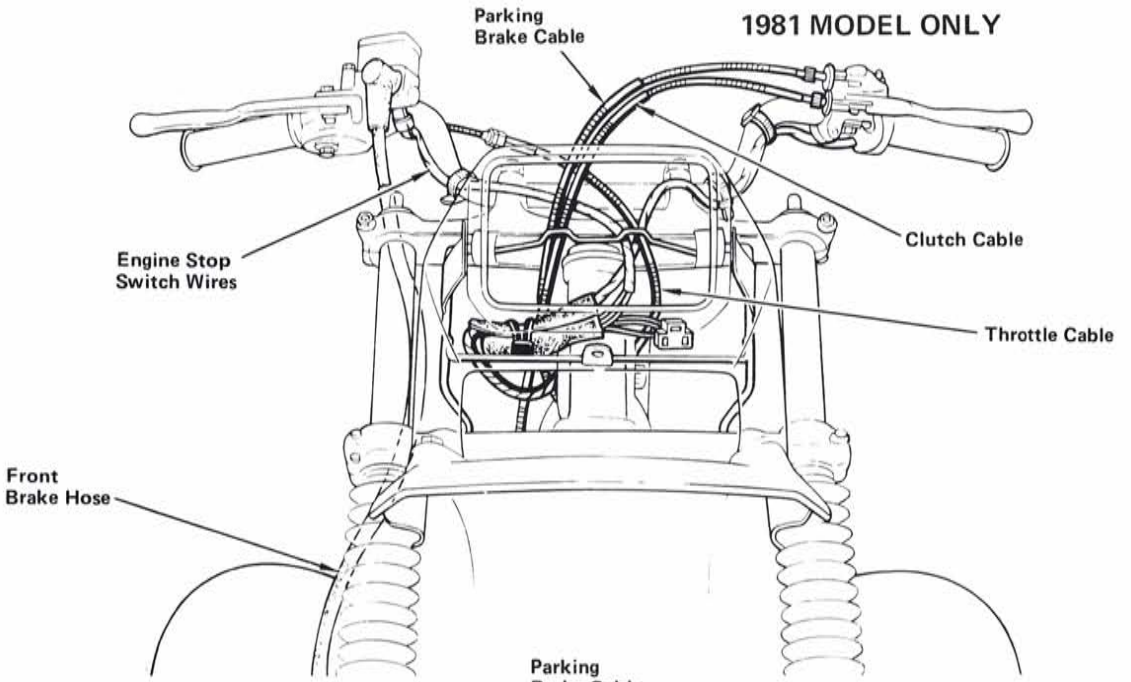

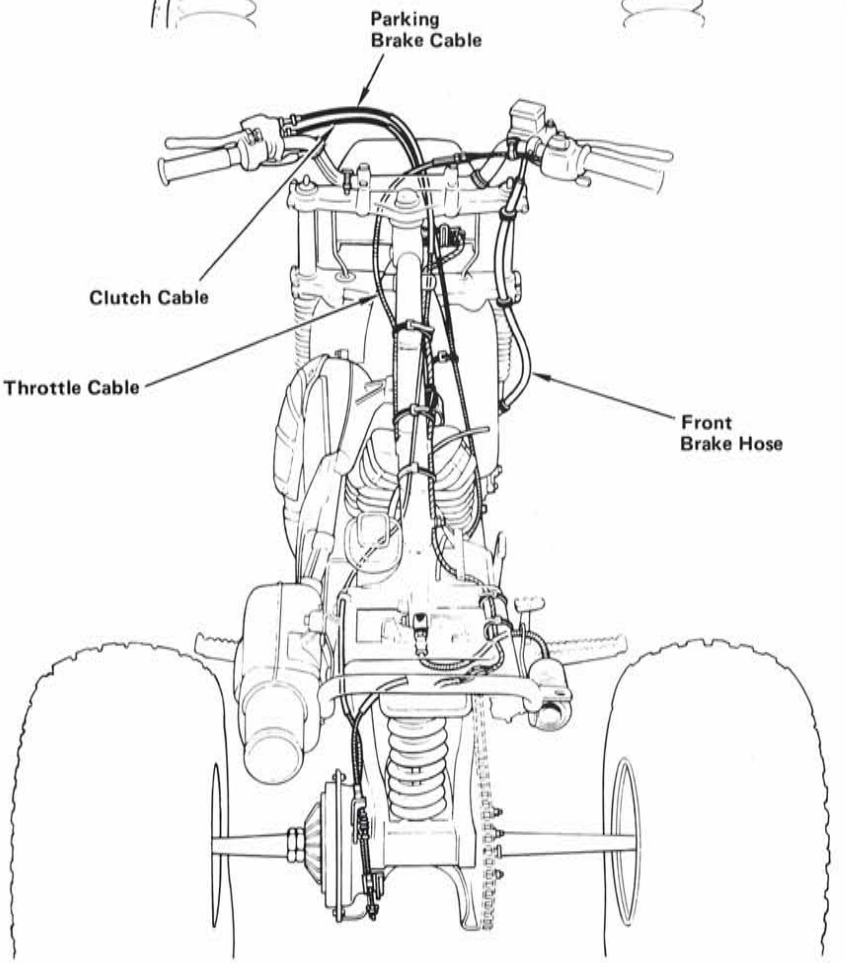

STEP 48—Check routing of front brake hose, rear brake cables (1981), clutch cable, throttle cable, and engine stop switch wires as shown.

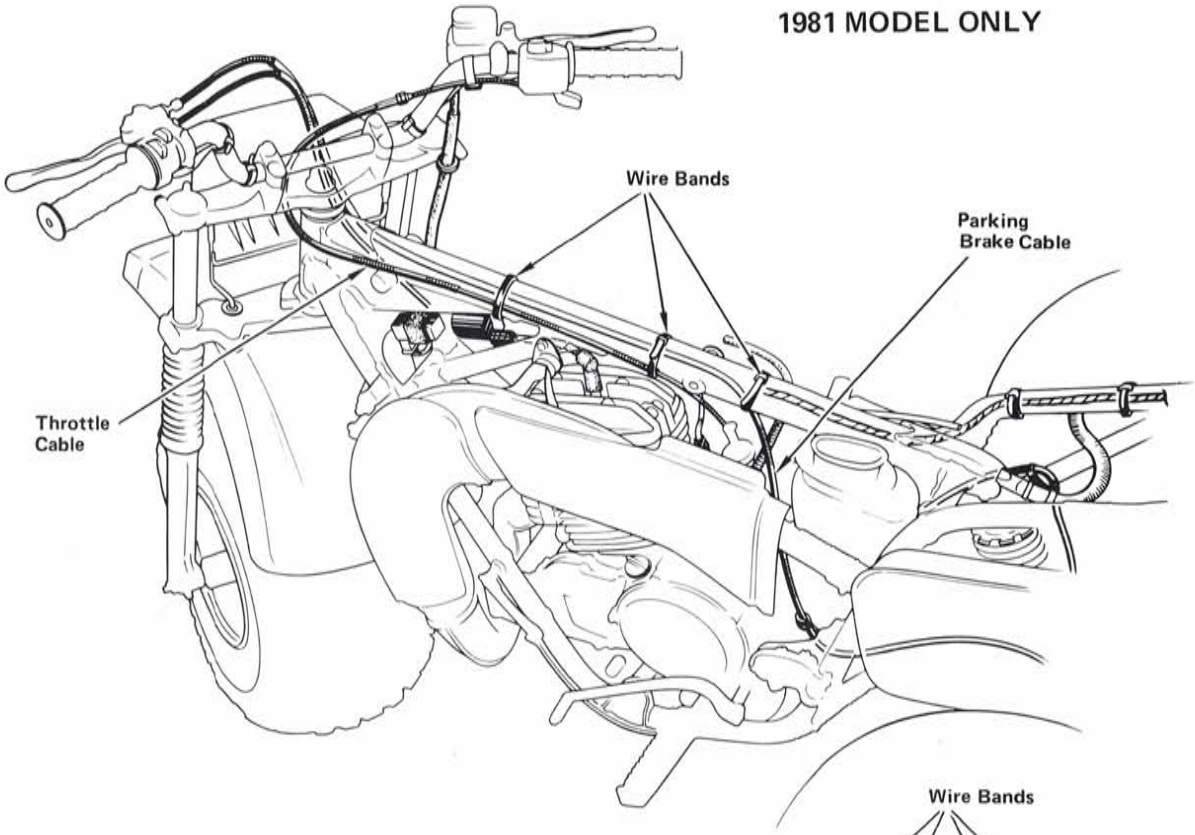

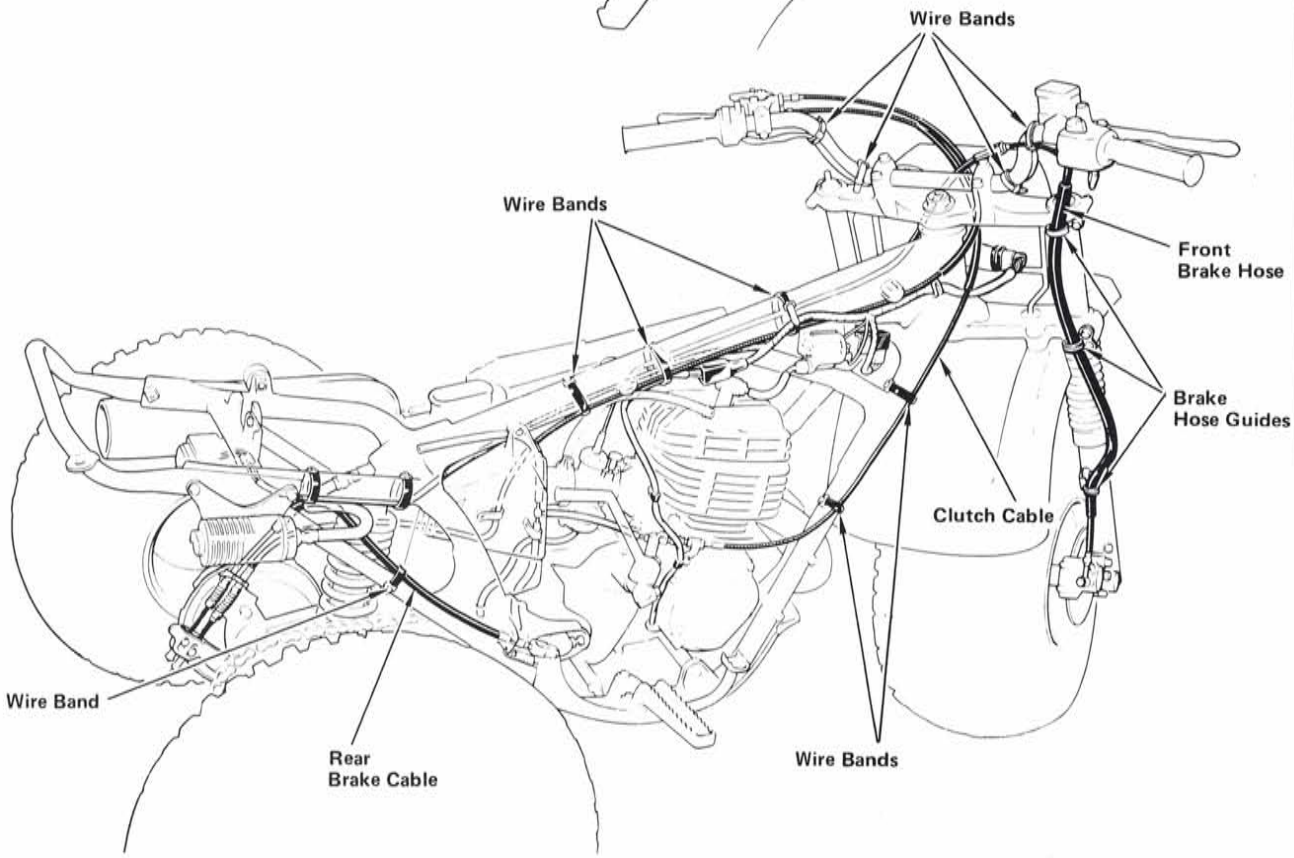

STEP 48—(Continued)

1982 MODEL ONLY

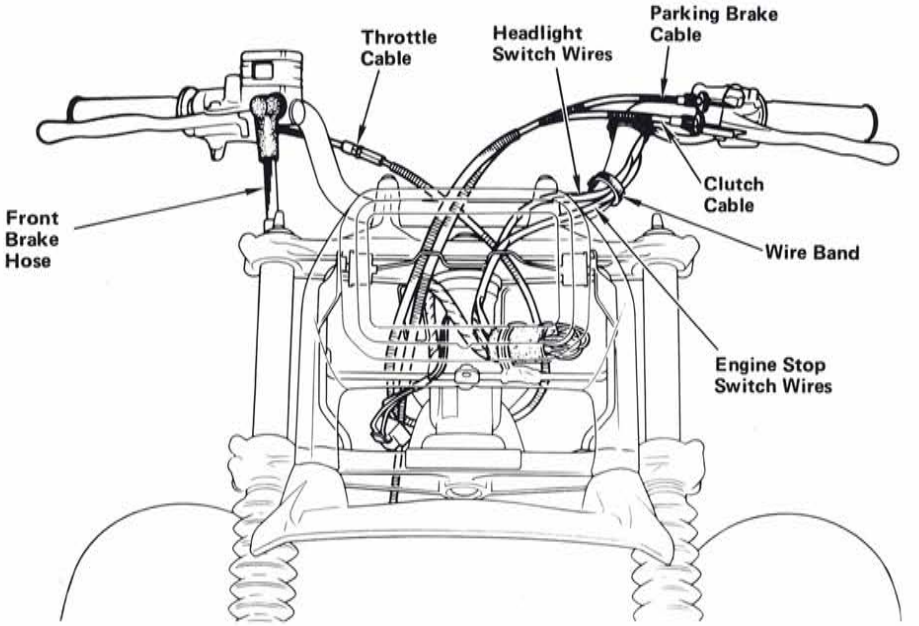

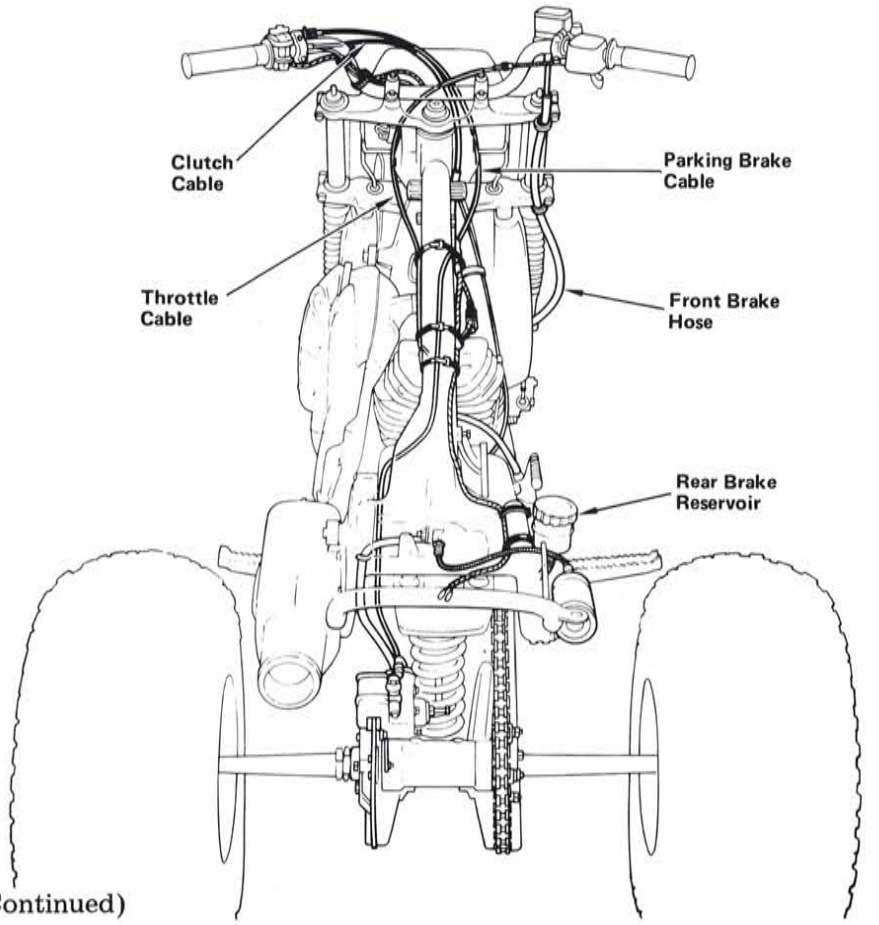

STEP 48—(Continued)

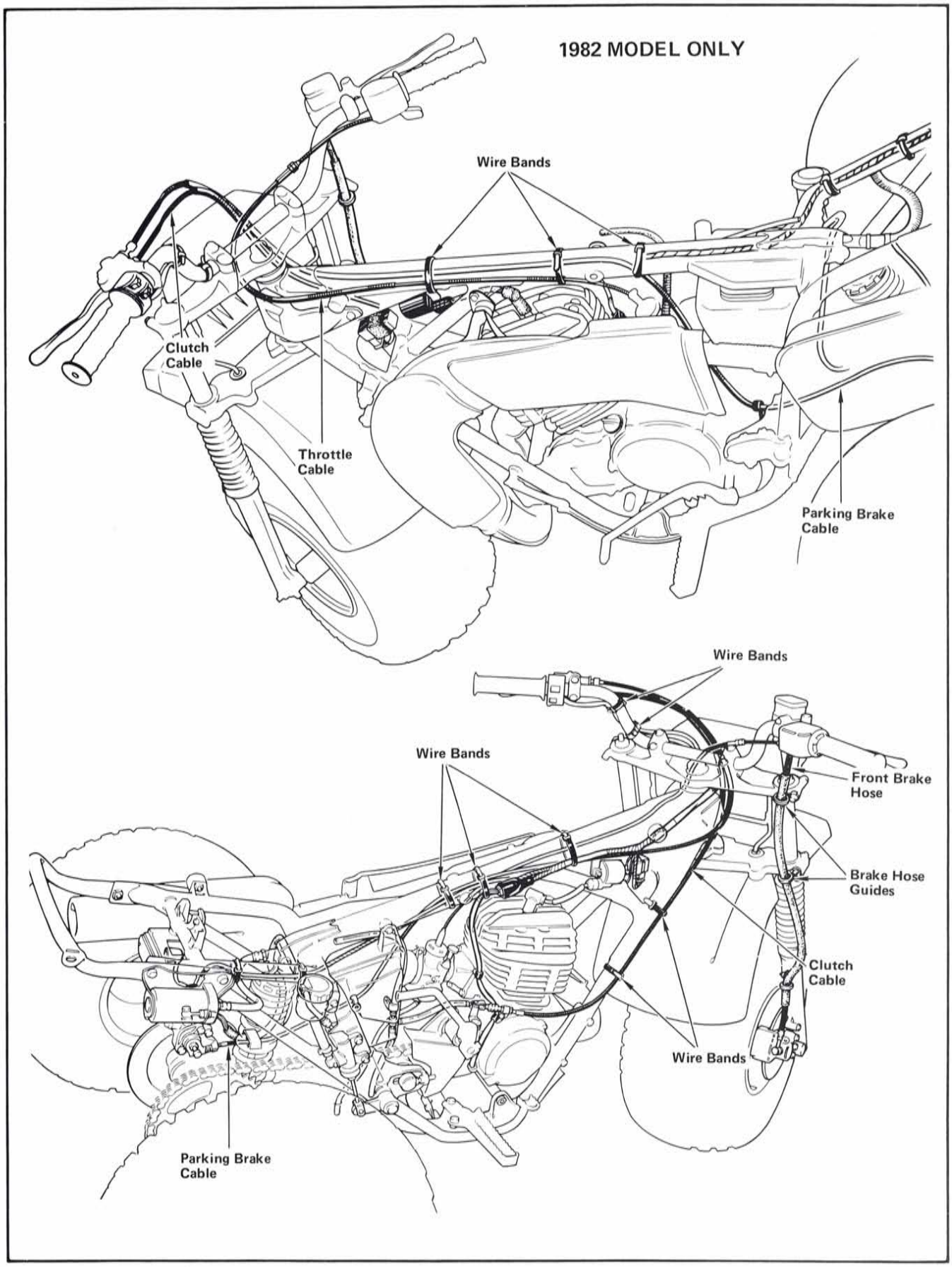

1982 MODEL ONLY

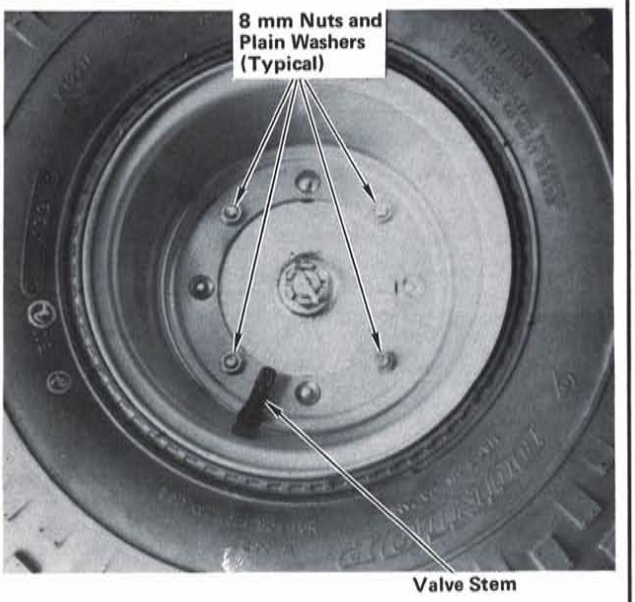

STEP 49—Install rear wheels, with valve stems to the outside, using four 8 mm nuts and plain washers for studs of each wheel. Tighten nuts to specified torque.

Torque specification:
2.1 kg-m (16 lb-ft)

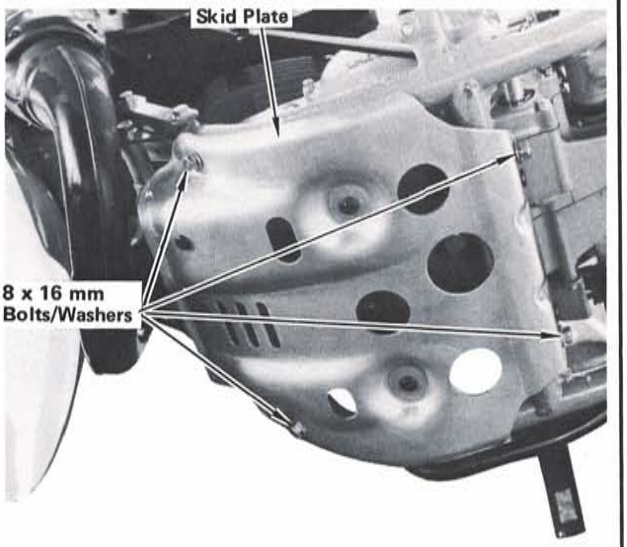

STEP 50—Position skid plate as shown and install using four 8 x 16 mm bolt/washer combinations. Tighten bolts to specified torque.

Torque specification:
2.1 kg-m (16 lb-ft)

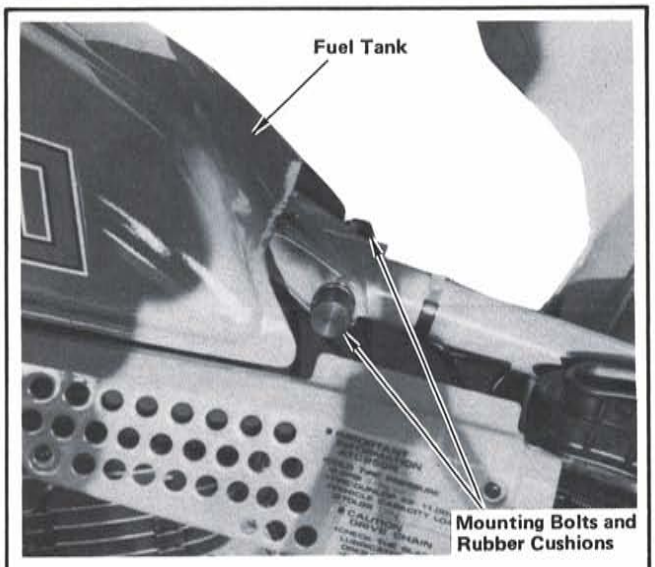

STEP 51—Drain fuel tank as described in shop manual. Remove fuel tank by removing mounting bolts at rear of tank and disconnecting fuel line. Inspect and flush fuel tank. Reinstall fuel tank, connect fuel line, fill tank, turn on fuel valve and check for leaks and flow through fuel filter. Tighten rear mounting bolts securely. Insert end of fuel cap breather tube into hole in steering stem nut.

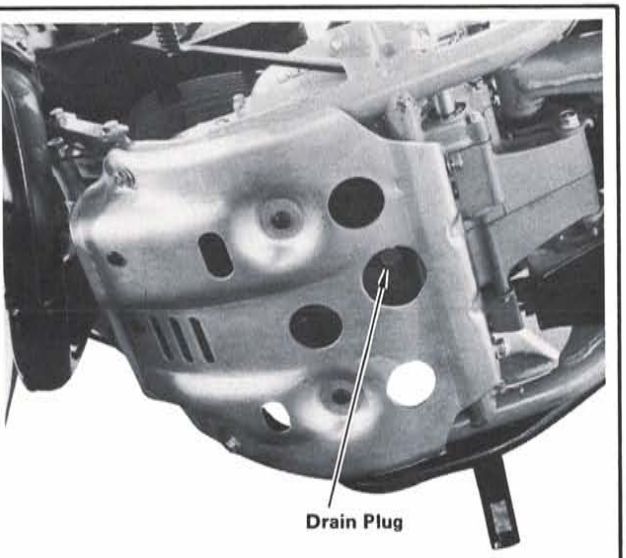

STEP 52—Remove drain plug and drain transmission oil. Reinstall and tighten drain plug.

NOTE: Not required if less than 4 months have elapsed since date of manufacture shown on identification plate on steering head.

Fill transmission with recommended oil as described in owner's manual.

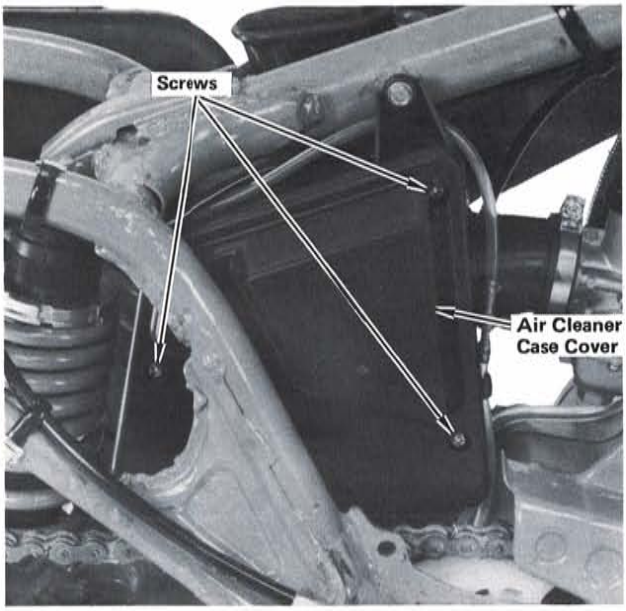

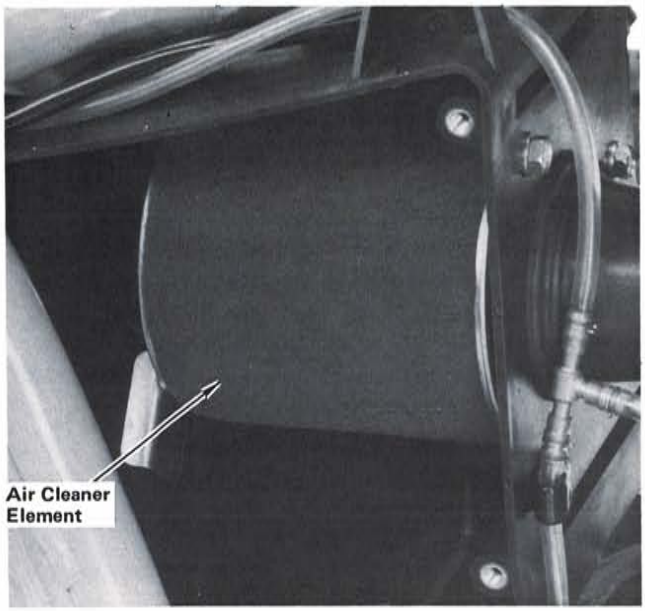

STEP 53—Remove three screws attaching right side of air cleaner case cover and remove air cleaner case cover. Remove filter element and check condition. If necessary, clean and oil filter element as described in owner's manual or shop manual. Reinstall filter element and air cleaner case cover. Reinstall screws and tighten securely.

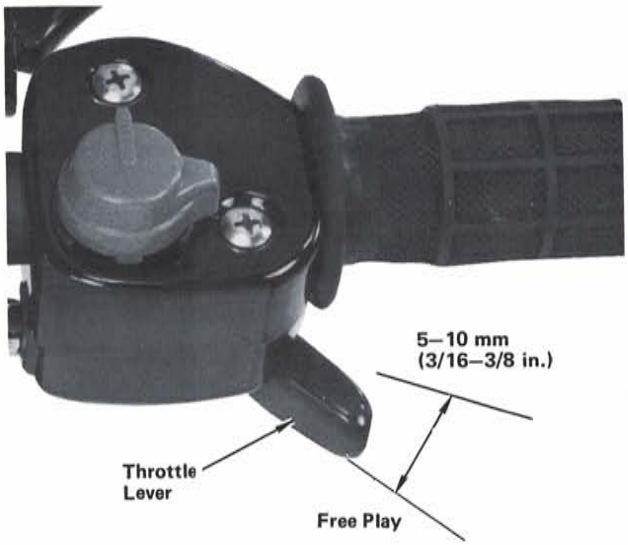

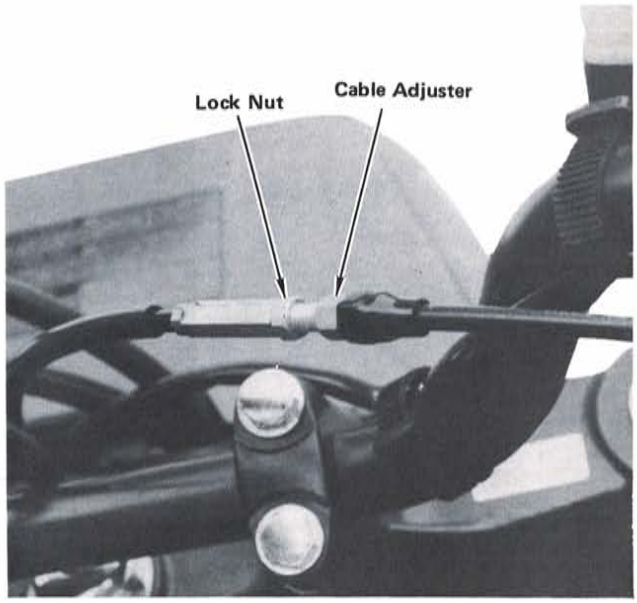

STEP 54—Check throttle cable for condition. Check that throttle lever free play is within 5—10 mm (3/16—3/8 in.) at tip of throttle lever. Check for smooth operation of throttle lever from fully closed to fully open in all steering positions and that throttle lever automatically returns from fully open to fully closed when released. If necessary to adjust free play, loosen lock nut and turn adjuster to obtain correct free play. After adjustment, tighten lock nut.

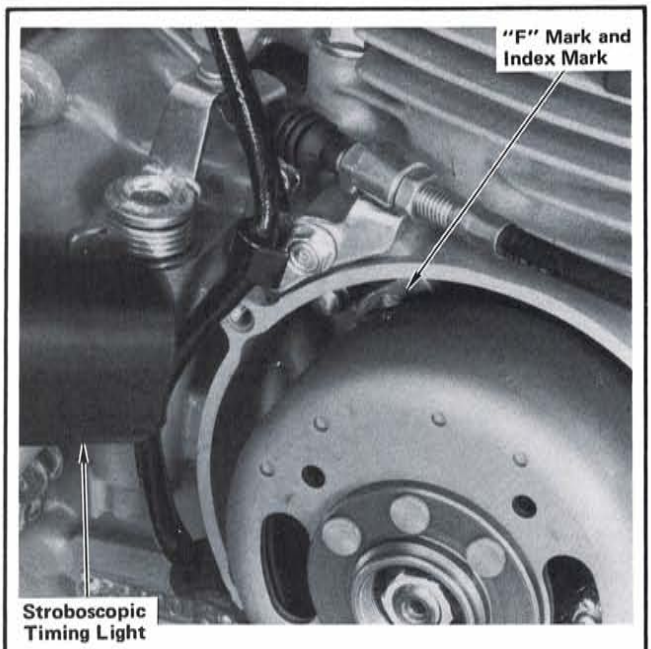

STEP 55—Check ignition timing as described in shop manual.

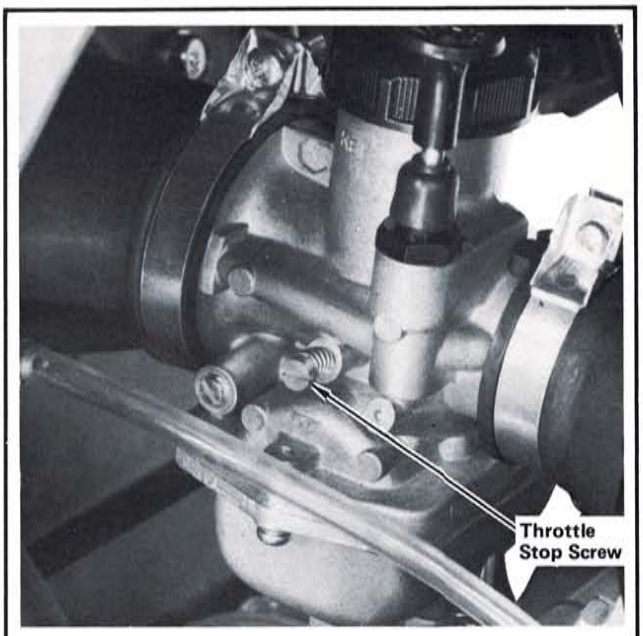

STEP 56—Connect a tachometer and check transmission in neutral. Start engine and allow it to warm up to operating temperature and check idle speed at 1,300 ± 150 rpm. If necessary, adjust idle speed using throttle stop screw. Remove tachometer.

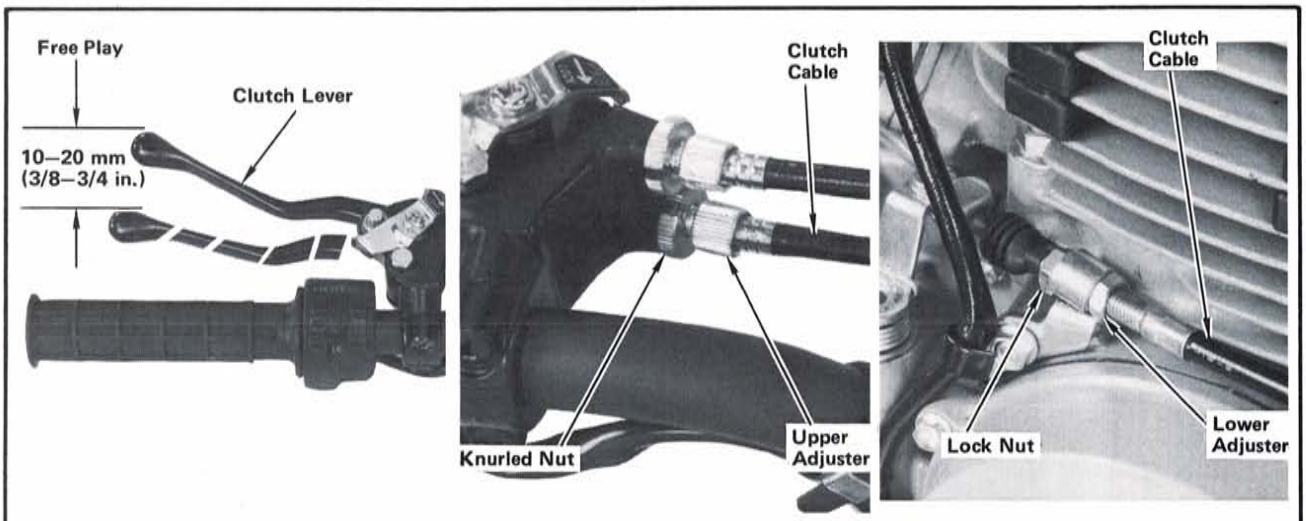

STEP 57—Check clutch lever free play at tip of clutch lever before clutch starts to engage. Free play, measured at tip of clutch lever should be between 10 and 20 mm (3/8—3/4 in.). To adjust free play, loosen knurled nut and turn upper adjuster. If upper adjuster is turned out near its limit and correct free play cannot be obtained, screw upper adjuster all the way in and tighten knurled nut. Then use lower adjuster to obtain correct free play as follows. Loosen lock nut and turn lower adjuster to obtain correct free play. After adjustment, tighten lock nut.

CAUTION: After adjusting clutch lever free play, start engine, pull in clutch lever and shift into gear. Check that engine does not stall and ATC does not creep. Gradually release clutch lever and open throttle, ATC should start smoothly and accelerate gradually.

1981 MODEL ONLY

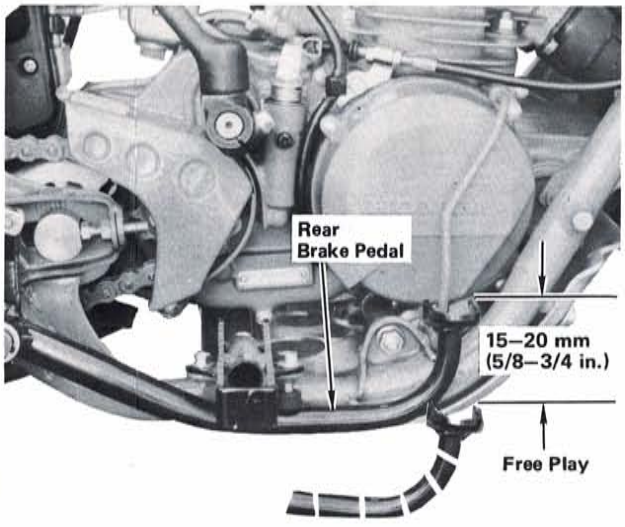

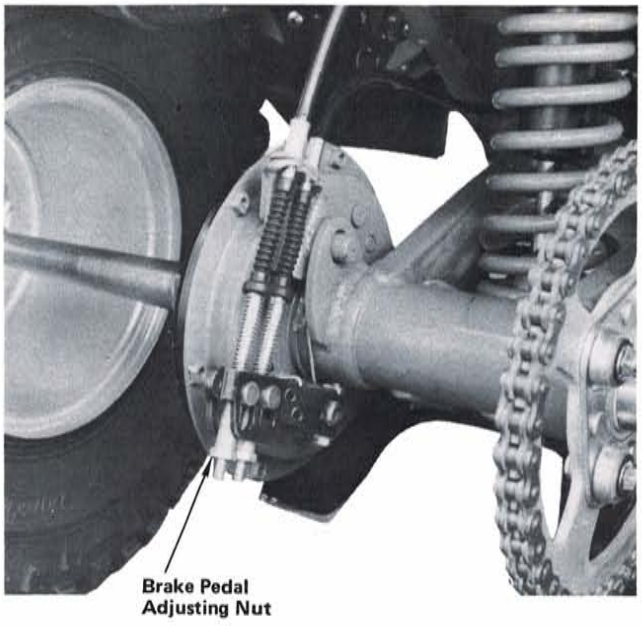

STEP 58—Raise rear wheels off ground using a support block under vehicle. Rotate rear wheels by hand and measure free play before brake starts to engage. Free play, measured at tip of brake pedal, should be between 15 and 20 mm (5/8—3/4 in.). To adjust free play, turn brake pedal adjusting nut at rear brake arm. Turning brake pedal adjusting nut clockwise decreases brake pedal free play. Be sure adjusting nut is seated correctly.

1981 MODEL ONLY

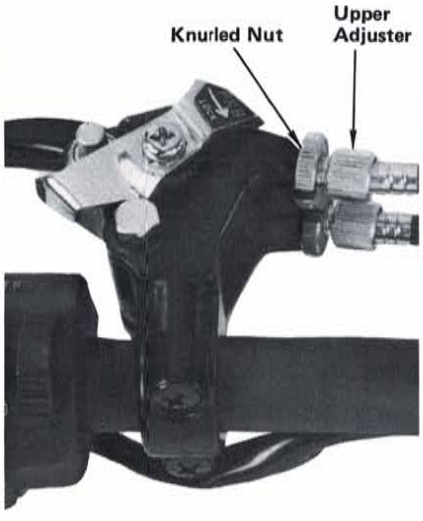

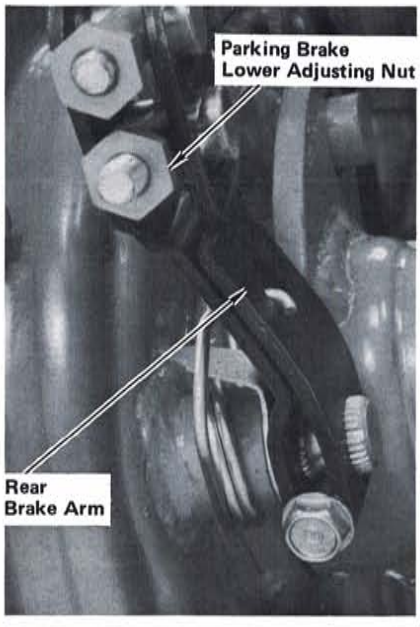

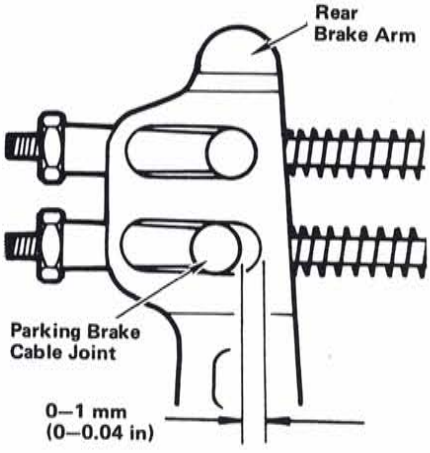

STEP 59—Check parking brake operation. If adjustment is necessary, loosen knurled nut and turn upper adjuster on clutch lever bracket to obtain a clearance of 0—1 mm (0—0.04 in.) between parking brake cable joint and brake arm as shown. If proper clearance cannot be obtained using upper adjuster, tighten knurled nut and adjust clearance using lower adjusting nut at brake arm. Be sure adjusting nut is seated correctly.

1982 MODEL ONLY

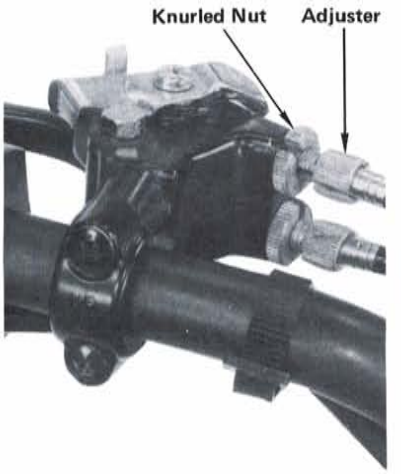

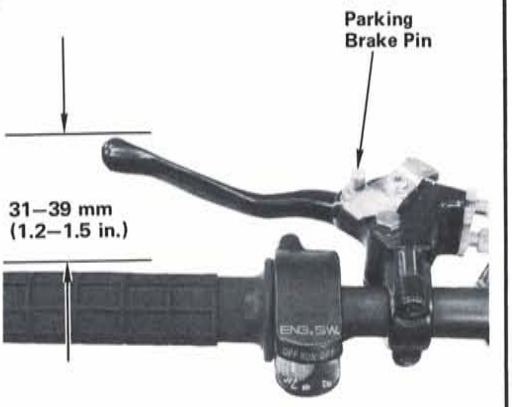

STEP 60—Check parking brake operation. Check that free play at tip of parking brake arm is 4—5 mm (0.16—0.20 in.). If adjustment is necessary, loosen lock nut on rear brake caliper and turn adjusting bolt until resistance is felt without squeezing clutch/parking brake lever. Tighten lock nut. Check that travel of clutch/parking brake hand lever is between 31 and 39 mm (1.2—1.5 in.) at tip of lever. If adjustment is necessary, loosen knurled nut, squeeze clutch/parking brake lever, and turn adjuster while pushing parking brake pin. Tighten lock nut and recheck brake arm free play at rear brake caliper.

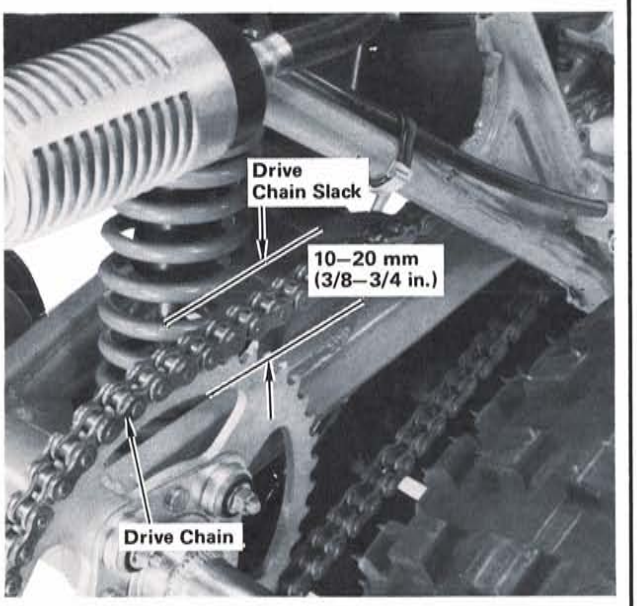

STEP 61—Check drive chain slack and lubrication. If necessary, adjust and lubricate drive chain as described in owner's manual or shop manual.

Drive chain slack:
10–20 mm (3/8–3/4 in.)

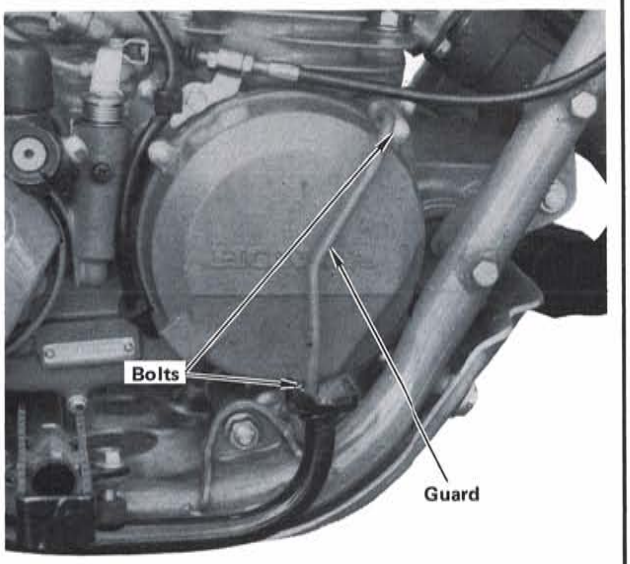

STEP 62—Install guard where shown using two existing right cover bolts. Tighten bolts securely.

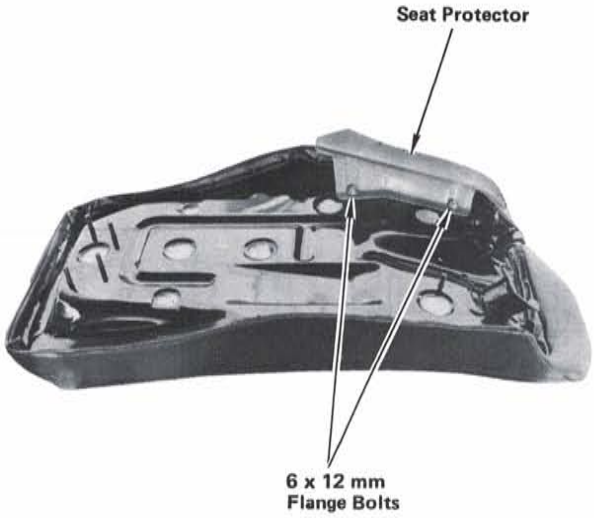

STEP 63—Position seat protector under seat as shown and install using two 6 x 12 mm flange bolts. Tighten bolts to specified torque.

Torque specifications:
1.0 kg-m (8 lb-ft)

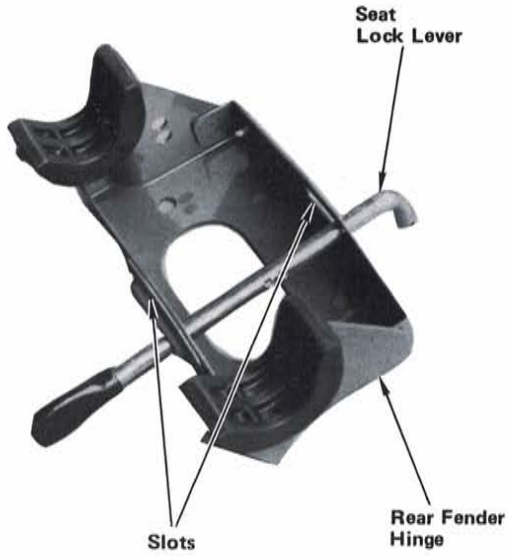

STEP 64—Insert seat lock lever through rear fender hinge as shown.

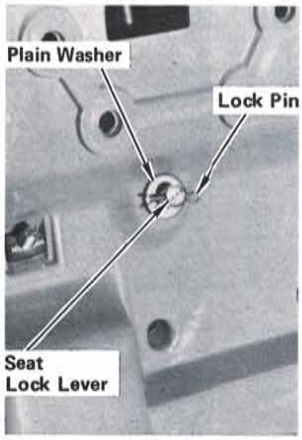

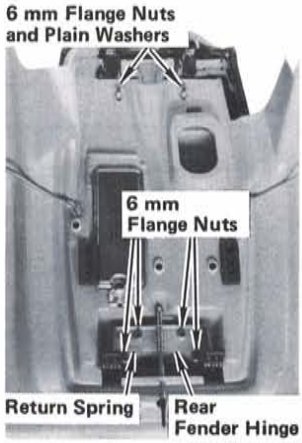

STEP 65—Insert end of seat lock lever through hole in rear fender as shown and secure on the upper side with a plain washer and lock pin. Insert seat studs through holes in rear fender and rear fender hinge as shown. Install a 6 mm plain washer on two forward seat studs and then install a 6 mm flange nut on each stud. Tighten all 6 mm nuts to specified torque. Hook long end of return spring onto lock lever and short end onto rear fender hinge as shown.

Torque specification:
1.0 kg-m (8 lb-ft)

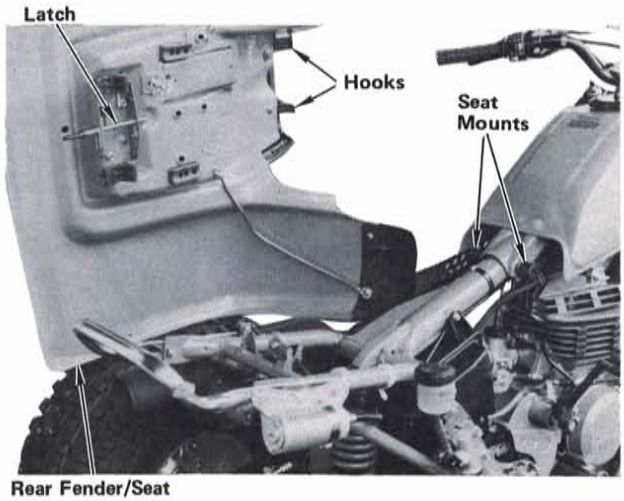

STEP 66—Install rear fender/seat by sliding forward seat hooks over seat mounts and pressing down on rear of seat to engage seat latch. Be sure seat latch is fully engaged.

1981 MODEL ONLY

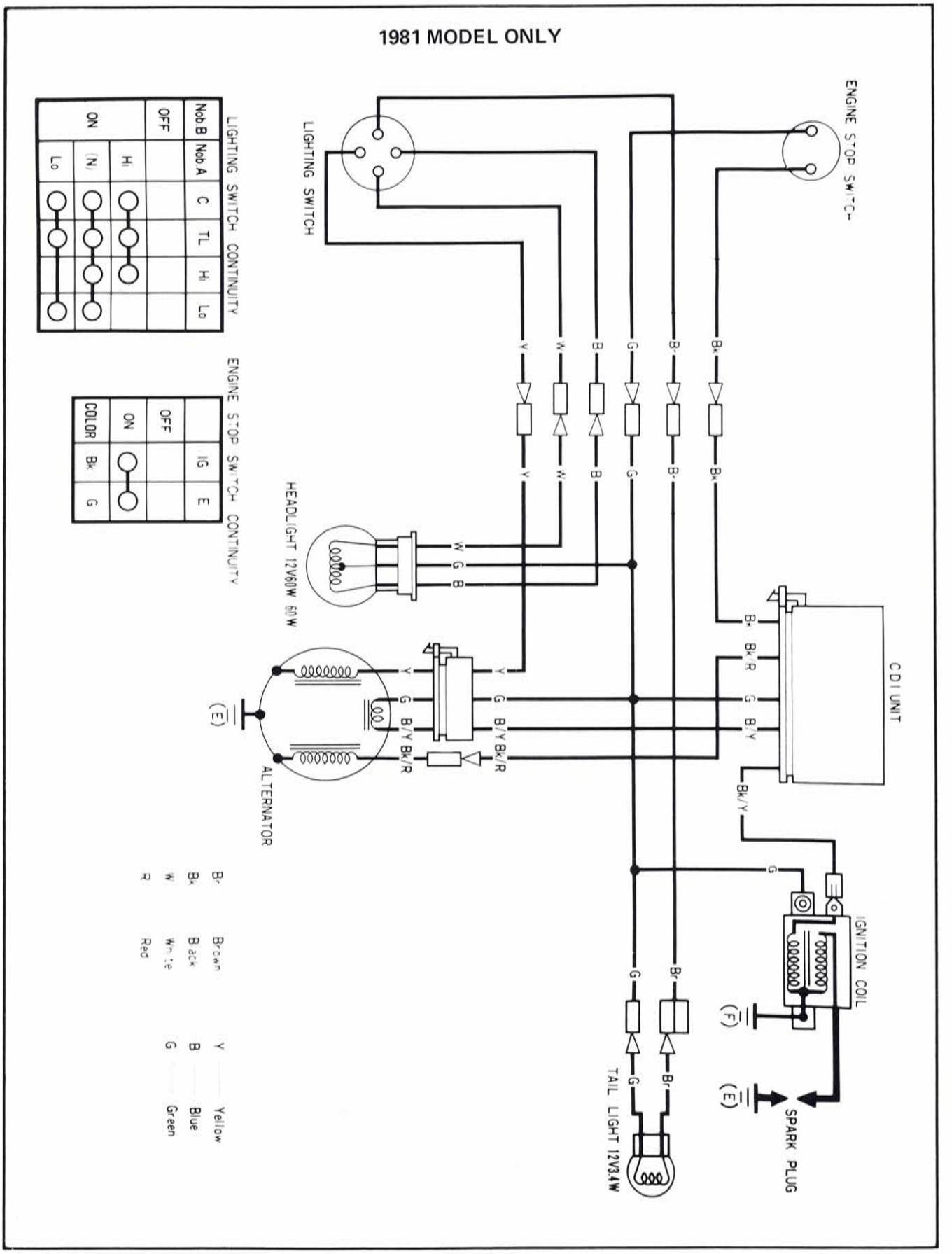

7/81

1982 MODEL ONLY

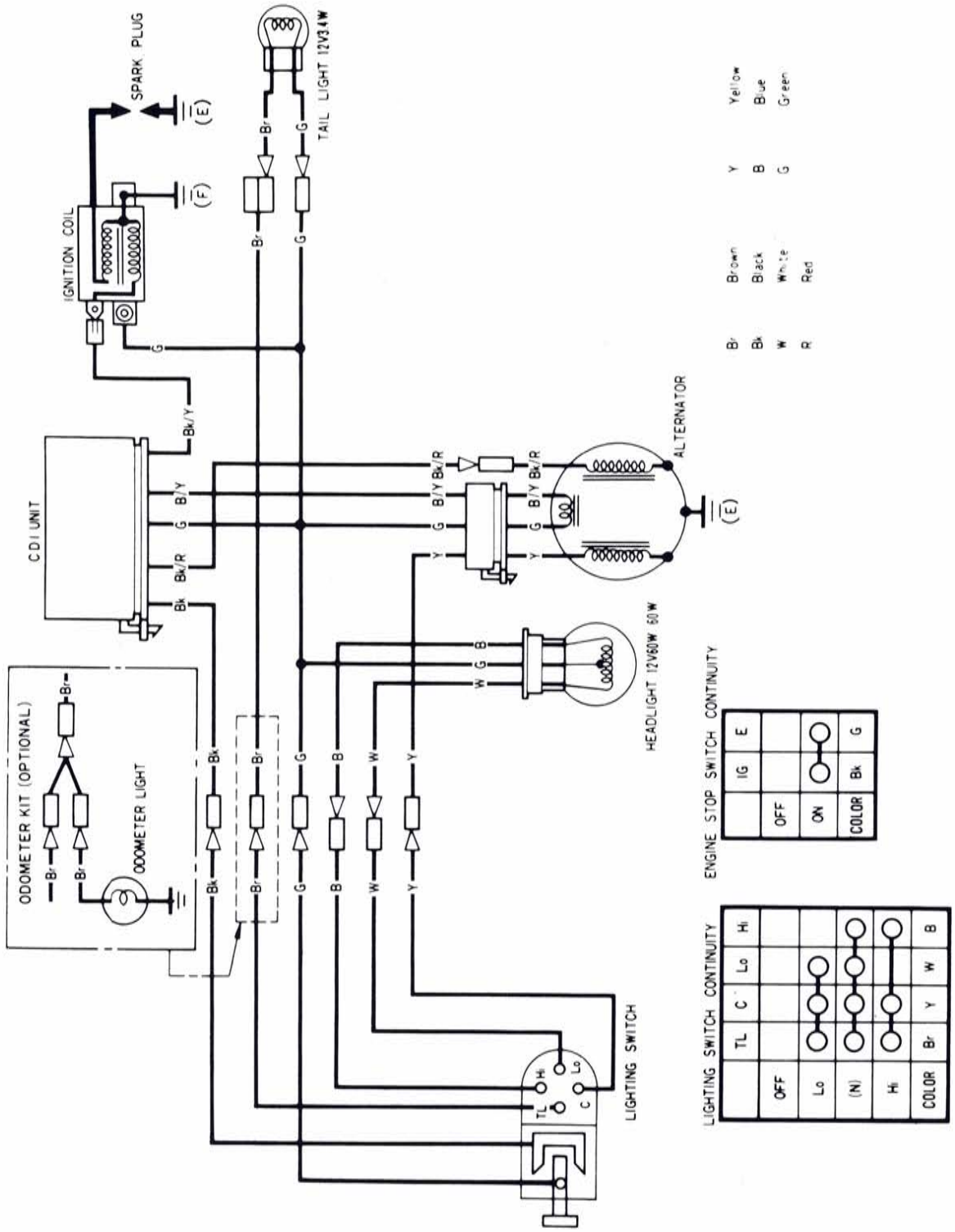

TORQUE TABLE

ITEM	SIZE	TORQUE
Handlebar upper holder bolts	8 mm	2.1 kg-m (16 lb-ft)
Fork bridge bolts	8 mm	2.7 kg-m (19 lb-ft)
Front brake master cylinder screws	6 mm	1.0 kg-m (8 lb-ft)
Front fender bolts	6 mm	1.0 kg-m (8 lb-ft)
Wheel hub nuts	8 mm	2.1 kg-m (16 lb-ft)
Front axle nut	14 mm	9.0 kg-m (16 lb-ft)
Front brake caliper bolts	8 mm	(1981) 2.7 kg-m (19 lb-ft) (1982) 2.2 kg-m (16 lb-ft)
Brake hose guide bolt	6 mm	(1981) 1.2 kg-m (19 lb-ft) (1982) 1.0 kg-m (8 lb-ft)
Carrying handle bolts	8 mm	2.1 kg-m (16 lb-ft)
Sub muffler bolts	8 mm	2.1 kg-m (16 lb-ft)
Rear axle nuts	18 mm	9.0 kg-m (68 lb-ft)
Skid plate bolts	8 mm	2.1 kg-m (16 lb-ft)
Seat protector bolts	6 mm	1.0 kg-m (8 lb-ft)
Seat/fender nuts	6 mm	1.0 kg-m (8 lb-ft)

NOTE: Check all items listed on the following Pre-delivery Service Check List. Refer to owner's manual or shop manual for specifications and detailed procedures. Always test ride unit to make sure that it is functioning properly.

PRE-DELIVERY SERVICE CHECK LIST

- ☐ Fill front and rear (1982) brake master cylinder reservoir(s) with DOT 3 brake fluid, and bleed brake system.
- ☐ Adjust parking and rear brakes, check brake hose(s) and cable routing and check operation.
- ☐ Drain oil from transmission (if necessary). Refill transmission with recommended oil.
- ☐ Remove and inspect fuel tank, drain and flush.
- ☐ Check air filter element. Clean and oil if necessary.
- ☐ Adjust clutch, check cable routing and check operation.
- ☐ Reinstall fuel tank, fill, turn on petcock and check for leaks.
- ☐ Adjust idle speed.
- ☐ Check ignition timing.
- ☐ Check throttle lever free play, cable routing, and operation in all steering positions.
- ☐ Adjust and lubricate drive chain.
- ☐ Check tire pressure.
- ☐ Check front fork air pressure.
- ☐ Check operation and adjustment of front and rear suspension.
- ☐ Inspect electrical components for proper operation and adjustment.
  - Headlight: Adjust.
  - Taillight.
  - Engine stop switch.
- ☐ Check security of all nuts, bolts, and other fasteners.
- ☐ Check to ensure that all applicable recall and product update campaigns are complied with.
- ☐ **TEST RIDE:** Check performance, handling, and operation.
  - Transmission and clutch: Ease of shifting, clutch operation, etc.
  - Acceleration: Smoothness, etc.
  - Cruising: Smoothness, etc.
  - Handling: Stability and cornering.
  - Brakes: Smoothness and stopping power.
  - Idling: Smoothness, throttle response, and return to idle.
  - Recheck idle speed after 10 minutes of stop and go operation.
  - Upon completion of test ride, check for fuel and oil leaks.

7/81

1981 LOOSE PARTS LIST

The following is a list of items contained in the parts package carton and loose parts in the crate.

PART NAME	QTY	H/C	PART NUMBER
Upper holder	2	026524	95014-22200
Bolt, flange, 8 x 36 mm	4	033829	90111-362-000
Front fork assy (R)	1	104659	51400-961-003
Front fork assy (L)	1	104667	51500-961-003
Bolt, flange, 8 x 57 mm	2	104740	90125-961-000
Bolt, flange, 8 x 37 mm	2	104739	90119-961-000
Nut, flange, 8 mm	2	104746	90303-379-690
Bolt, flange, 8 x 40 mm	2	104774	95700-08040-07
Front fender	1	104693	61100-961-003
Collar, fender mounting	4	076394	61104-444-000
Bolt, flange, 6 x 25 mm	4	048448	95700-06025-00
Front wheel	1	------	----------
Front axle	1	104611	44301-961-000
Front axle collar (R)	1	104612	44311-961-000
Front axle collar (L)	1	104613	44312-961-000
Axle nut, 14 mm	1	046725	90305-401-680
Pin, cotter, 3.0 x 25 mm	1	005842	94201-30250
Caliper assy	1	------	----------
Bolt, flange, 8 x 40 mm	2	102880	95800-08040-00
Headlight assy	1	104694	61301-961-003ZA
Collar, gearshift lever setting	2	094113	90522-170-700
Screw, pan, 6 x 12 mm	2	------	93500-06012-00
Bolt, flange, 6 x 12 mm	1	048117	95700-06012-07
Tube, air cleaner intake	1	104523	17218-961-000
Carrying handle	1	104714	81200-961-000
Bolt, flange, 8 x 12 mm	1	049645	95700-08012-00
Bolt, flange, 8 x 16 mm	1	063124	95700-08016-00
Sub muffler	1	104533	18330-961-003
Stay assy	1	104537	18359-961-003
Bolt, muffler	2	104741	90127-961-000
Nut, flange, 8 mm	1	046844	94050-08080
Seal, silencer	1	067893	18359-430-000
Spring, muffler	1	072254	18332-430-700
Bolt/washer, 8 x 16 mm	2	067490	93493-08016-08
Rear wheel	2	------	----------
Rear hub nut	2	037796	90306-329-770
Hub washer	2	104595	42322-961-000
Hub comp., rear wheel	2	070793	42410-943-000
Nut, hex., 8 mm	6	033145	94001-08080-0S
Washer, spring, 8 mm	6	026033	94111-08800
Pin, cotter, 4.0 x 40 mm	2	104767	94201-40400
Guard, engine	1	------	50360-961-010
Bolt/washer, 8 x 16 mm	4	104766	93494-08016-00
Seat comp.	1	104702	77100-961-003
Seat protector	1	104703	77106-961-00ZA
Bolt, flange, 6 x 12 mm	2	025225	95700-06012-08
Hinge comp., rear fender	1	104706	80102-961-000ZA

1981 LOOSE PARTS LIST (Continued)

PART NAME	QTY	H/C	PART NUMBER
Lever, seat lock	1	104647	50221-961-000
Spring, lever set	1	104648	50222-961-000
Washer, plain, 8 mm	1	026484	94101-08800
Lock pin, 8 mm	1	104768	94251-08400
Nut, flange, 6 mm	6	061268	94050-06080
Washer, plain, 6 mm	2	062982	94103-06800
Guide, brake hose	1	104633	45467-961-000
Guide, brake hose (B)	1	068621	45468-428-000
Guide, brake hose (A)	1	068620	45467-428-000
Bolt, flange, 6 x 20 mm	1	048868	95700-06020-00
Nut, flange, 6 mm	1	047162	94050-06000
Rear fender assy	1	------	----------
Owner's manual (1981)	1	104580	3196100

1982 LOOSE PARTS LIST

PART NAME	QTY	H/C	PART NUMBER
Upper holder	2	026524	95014-22200
Bolt, flange, 8 x 36 mm	4	033829	90111-362-000
Front fork assy (R)	1	106424	51400-961-013
Front fork assy (L)	1	104667	51500-961-003
Bolt, flange, 8 x 60 mm	2	------	95700-08060-07
Nut, hex, 8 mm	6	------	94111-08700-0S
Washer, plain, 8 mm	2	------	94102-08700
Washer, lock, 8 mm	6	------	94111-08700
Bolt, flange, 8 x 50 mm	4	104774	95700-08050-07
Bolt, flange, 6 x 20 mm	1	048868	95700-06020-00
Nut, flange, 6 mm	1	047162	94050-06000
Guide, brake hose	1	108432	45467-961-010
Guide, brake hose (B)	1	108518	45468-961-000
Guide, brake hose (A)	1	068620	45467-428-000
Front fender	1	104693	61100-961-003
Collar, fender mounting	4	076394	61104-444-000
Bolt, flange, 6 x 25 mm	4	048448	95700-06025-000
Front wheel	1	------	----------
Front axle	1	104611	44301-961-000
Front axle collar (R)	1	104612	44311-961-000
Front axle collar (L)	1	104613	44312-961-000
Axle nut, 14 mm	1	046725	90305-401-680
Pin, cotter, 3.0 x 25 mm	1	005842	94201-30250
Caliper assy	1	------	----------
Bolt, flange, 8 x 40 mm	2	102880	95800-0804-00
Carrying handle	1	104714	81200-961-000
Bolt, flange, 8 x 12 mm	1	049645	95700-08012-00
Bolt, flange, 8 x 16 mm	1	063124	95700-08016-00
Headlight assy	1	104694	61301-961-003ZA
Collar, gearshift lever setting	3	094113	90522-170-700
Screw, pan, 6 x 12 mm	2	------	93500-06012-00
Bolt, flange, 6 x 12 mm	1	048117	95700-06012-07

1982 LOOSE PARTS LIST (Continued)

PART NAME	QTY	H/C	PART NUMBER
Sub muffler	1	104533	18330-961-003
Stay assy	2	104537	18359-961-000
Bolt, muffler	2	104741	90127-961-000
Nut, flange, 8 mm	1	046844	94050-08080
Seal, silencer	1	067893	18359-430-000
Spring, muffler	1	072254	18332-430-700
Bolt/washer, 8 x 16 mm	2	067490	93493-08016-08
Rear wheel	2	------	----------
Rear hub nut	2	037796	90306-329-770
Hub washer	2	104595	42322-961-000
Hub comp., rear wheel	2	108477	42410-961-000
Nut, hex., 8 mm	6	033145	94001-08080-0S
Washer, spring, 8 mm	6	026033	94111-08800
Pin, cotter, 4.0 x 40 mm	2	104767	94201-40400
Guard, engine	1	------	50360-961-010
Bolt/washer, 8 x 16 mm	4	104766	93494-08016-00
Rear fender assy	1	------	----------
Hinge comp., rear fender	1	104706	80102-961-000ZA
Lever, seat lock	1	104647	50221-961-000
Spring, lever set	1	104648	50222-961-000
Washer, plain, 8 mm	1	026484	94101-08800
Lock pin, 8 mm	1	104768	94251-08400
Nut, flange, 6 mm	6	061268	94050-06080
Washer, plain, 6 mm	2	062982	94103-06800
Seat comp.	1	----------	----------
Seat Protector	1	104703	77106-961-00ZA
Bolt, flange, 6 x 12 mm	2	025225	95700-06012-08
Owner's manual	1	106998	3196101

READ THIS READ THIS READ THIS

READ THIS READ THIS READ THIS

HONDA

MODIFICATIONS WHICH YOU HAVE MADE, OR SHOULD MAKE IN THE FUTURE, TO ANY HONDA MOTORCYCLE, SHALL BE DEEMED BY OUR COMPANY TO HAVE BEEN PERFORMED AT YOUR SOLE RISK AND RESPONSIBILITY, AND WITHOUT OUR COMPANY'S OR THE MANUFACTURER'S APPROVAL OR CONSENT, IMPLIED OR EXPRESSED. WE FURTHER DISCLAIM ANY AND ALL LIABILITY, OBLIGATION, OR RESPONSIBILITY FOR ANY DEFECTS OF MODIFIED PARTS OR OF THE MODIFIED MOTORCYCLE, AND FOR ANY CLAIMS, DEMANDS, OR CAUSES OF ACTION FOR DAMAGE TO PROPERTY OR FOR PERSONAL INJURIES RESULTING FROM THE MODIFICATION OF SAID HONDA MOTORCYCLE.

READ THIS READ THIS READ THIS