MECHANICAL SPECIFICATIONS

PROVIDE EQUIPMENT INDICATED ON THE DRAWINGS, AND AS REQUIRED FOR A COMPLETE FUNCTIONING SYSTEM. DEFINITIONS: FURNISH MEANS TO SUPPLY AND DELIVER TO PROJECT SITE, READY FOR INSTALLATION. INSTALL MEANS TO PLACE IN POSITION AND MAKE CONNECTIONS FOR SERVICE OR USE. PROVIDE MEANS TO FURNISH AND INSTALL, COMPLETE AND READY FOR INTENDED USE. WARRANTY: PROVIDE LABOR AND MATERIALS TO REPAIR OR REPLACE DEFECTIVE PARTS AND MATERIALS AS REQUIRED FOR ONE YEAR AFTER SUBSTANTIAL COMPLETION OR OWNER ACCEPTANCE OF THE COMPLETED PROJECT. PROVIDE A SEPARATE LINE ITEM DEDUCT AMOUNT ON THE PROPOSAL FORM TO DELETE WARRANTY SERVICE, AT THE OWNER'S OPTION. PROVIDE OPERATION MANUALS, MAINTENANCE MANUALS AND SCHEMATICS FOR ALL MECHANICAL EQUIPMENT INSTALLED. COORDINATION: COORDINATE WITH THE WORK OF OTHER SECTIONS, EQUIPMENT FURNISHED BY OTHERS, REQUIREMENTS OF THE OWNER, AND WITH THE CONSTRAINTS OF THE EXISTING CONDITIONS OF THE PROJECT SITE. ROOF PENETRATIONS SHALL COMPLY WITH "SMACNA" AND "NRCA" STANDARDS, AND WITH THE REQUIREMENTS OF THE EXISTING ROOFING WARRANTY, IF APPLICABLE. DO NOT PERFORM ROOFING PENETRATIONS IN A MANNER WHICH WOULD VOID OR OTHERWISE LIMIT THE EXISTING ROOF WARRANTY. DUCT DIMENSIONS: UNLESS OTHERWISE NOTED, DUCT DIMENSIONS ON THE DRAWINGS ARE INSIDE CLEAR DIMENSIONS. SHEET METAL DUCTWORK: PROVIDE SHEET METAL DUCTWORK FABRICATED AND INSTALLED IN ACCORDANCE WITH ASHRAE AND SMACNA STANDARDS, FOR 1" W.G. PRESSURE CLASS, SEAL CLASS "A". SHEET METAL SHALL BE GALVANIZED SHEET STEEL OF LOCK FORMING QUALITY, WITH G90 ZINC COATING. SHEET STEEL SHALL COMPLY WITH ASTM A653 STANDARD SPECIFICATION FOR STEEL SHEET METAL, ZINC COATED (GALVANIZED) OR ZINC-IRON ALLOY-COATED (GALVANNEALED) BY THE HOT DIP PROCESS, AND A924 STANDARD SPECIFICATION FOR GENERAL REQUIREMENTS FOR SHEET, METALLIC-COATED BY THE HOT DIP PROCESS. ALL ANGLE IRON USED FOR SUPPORT SHALL BE GALVANIZED. CONNECTIONS TO WALLS OR FLOOR SHALL BE AIR TIGHT WITH ANGLE IRON AND CAULKING. SEAL ALL DUCT SEAMS, TRANSVERSE AND LONGITUDINAL, AIR TIGHT. PROVIDE TURNING VANES AT ALL 90º ELBOWS. TRAPEZE DUCT HANGERS: PROVIDE MINIMUM 1" X 2" X 1" X 18 GAUGE CHANNELS WITH MINIMUM 1" X 18 GAUGE STRAPS TO STRUCTURAL SUPPORT. ROUND SHEET METAL DUCT: PROVIDE SPIRAL SEAM (ALL SIZES) OR SNAP LOCK (DUCT SIZES UP TO 10") GALVANIZED STEEL COMPLYING WITH SMACNA STANDARDS. SPIRAL SEAM DUCTWORK SHALL HAVE SMACNA SEAM TYPE RL-1. FIBER GLASS DUCT BOARD IS AN ACCEPTABLE ALTERNATIVE IF APPROVED BY OWNER AND THE LOCAL BUILDING CODE OFFICIAL. PRODUCT AND INSTALLATION MUST MEET NAIMA STANDARDS AND OTHER APPLICABLE CODES AND REGULATIONS. EXPOSED DUCTWORK: EXPOSED DUCTWORK SHALL BE CLEANED OF DEBRIS AND OIL, THEN WIPED DOWN WITH VINEGAR OR OTHER SURFACE PREPARING CHEMICAL TO PREPARE DUCT FOR PAINT. DUCT SEALANT: PROVIDE POLYMERIC RUBBER TYPE SEALANT FOR USE ON BOTH INTERIOR LOCATED DUCTWORK AND DUCTWORK EXPOSED TO OUTDOOR CONDITIONS. SEALER SHALL HAVE HIGH BONDING STRENGTH FOR SURE, FIRST TIME SEALING OF JOINTS IN LOW, MEDIUM, AND HIGH PRESSURE DUCT SYSTEMS. SEALER SHALL BE HIGH IN SOLID CONTENT. PROVIDE A TWO PART TAPE SEALING SYSTEM, CONSISTING OF WOVEN FIBER TAPE IMPREGNATED WITH A GYPSUM MINERAL COMPOUND, AND A MODIFIED ACRYLIC/SILICONE ACTIVATOR THAT REACTS EXOTHERMICALLY WITH THE TAPE. TWO PART TAPE SEALING SYSTEM MUST BE RATED FOR BOTH INDOOR AND OUTDOOR APPLICATION. TAPE SHALL NOT CONTAIN ASBESTOS. DUCT INSULATION: MATERIAL FOR SUPPLY AND RETURN AIR DUCT ABOVE CEILING INSIDE THE BUILDING SHALL HAVE THE EQUIVALENT THERMAL RESISTANCE OF MINIMUM R-6. THE REQUIRED R VALUES ARE FOR INSTALLED INSULATION WITH 25% COMPRESSION AT THE CORNERS. PROVIDE PINS AND WASHERS IN ACCORDANCE WITH SMACNA REQUIREMENTS AND AS REQUIRED TO PREVENT INSULATION FROM SAGGING. PROVIDE ADEQUATE INSULATION AT THE SUPPLY AIR DIFFUSERS TO PREVENT CONDENSATION. FLEXIBLE DUCT : UL #181 LISTED, CLASS 1, AND CONTAIN A 0.1 PERM RATED POLYETHYLENE INNER LINER, WITH R-8 FIBERGLASS INSULATION. FLEXIBLE DUCTS SHALL BE SECURED TO RIGID SHEET METAL COLLARS AND AIR DIFFUSERS WITH NYLON TIES OR STAINLESS STEEL WORM GEAR STRAPS. SEAL ALL CONNECTIONS AND JOINTS AIRTIGHT. SUPPORT FLEXIBLE DUCTS FROM THE BUILDINGS STRUCTURE WITH MINIMUM 1" WIDE, 18 GAUGE, GALVANIZED STEEL STRAP AT MAXIMUM 4'-0" CENTERS. PROVIDE 4" WIDE SHEET METAL SADDLES AT EACH SUPPORT EACH STRAP. SAG OF FLEXIBLE DUCT BETWEEN HANGERS SHALL NOT EXCEED 1/2" PER FOOT OF SUPPORT SPACING. RADIUS FOR TURNS OF FLEXIBLE DUCTS SHALL BE A MINIMUM OF ONE DUCT DIAMETER. FLEXIBLE DUCT RUNS SHALL NOT EXCEED 10'-0" IN LENGTH AND SHALL BE THE SAME SIZE AS THE DIFFUSER NECK CONNECTION. ROUND VOLUME DAMPERS: PROVIDE MINIMUM 20 GAUGE GALVANIZED STEEL FRAME AND BLADES, MINIMUM 3/8" SQUARE STEEL AXLE, MOLDED SYNTHETIC BEARINGS, WITH LOCKING POSITION REGULATOR. REGULATOR SHALL BE POSITIONED WITH SHEET METAL BRACKET BEYOND DUCT COVERING. WHERE POSITIONING REGULATOR IS NOT ACCESSIBLE, PROVIDE COUPLING AND EXTENSION ROD WITH REGULATOR FOR CEILING OR WALL INSTALLATION, AS REQUIRED. RECTANGULAR VOLUME DAMPERS: PROVIDE MINIMUM 16 GAUGE GALVANIZED STEEL CHANNEL FRAME, 16 GAUGE GALVANIZED STEEL BLADES, MINIMUM ½" HEXAGONAL AXLE, BOLDED SYNTHETIC BEARINGS, WITH 3/8" SQUARE PLATED STEEL CONTROL SHAFT. LINKAGES SHALL BE CONCEALED IN THE FRAME. OPERATING SHAFT SHALL EXTEND BEYOND FRAME AND DUCT TO A LOCKING QUADRANT WITH ADJUSTABLE LEVER. MAXIMUM BLADE WIDTH SHALL NOT EXCEED 6".

DUCT TURNING VANES: PROVIDE FABRICATED TURNING VANES AND VANE RUNNERS, CONSTRUCTED IN ACCORDANCE WITH SMACNA "HVAC DUCT CONSTRUCTION STANDARDS". PROVIDE TURNING VANES CONSTRUCTED OF CURVED BLADES, SUPPORTED WITH BARS PERPENDICULAR TO BLADES, AND SET INTO SIDE STRIPS SUITABLE FOR MOUNTING IN DUCTWORK. FOLLOW SMACNA GUIDELINES FOR SPACING SUPPORT, AND CONSTRUCTION. ALL BLADES SHALL BE DOUBLE THICKNESS AIRFOIL TYPE. FLEXIBLE DUCT CONNECTORS: PROVIDE U.L. LABELED 30 OUNCE NEOPRENE COATED FIBERGLASS FABRIC DUCT CONNECTORS. DUCT ACCESS DOORS: PROVIDE HINGED ACCESS DOORS IN DUCTWORK WHERE REQUIRED FOR ACCESS TO EQUIPMENT. PROVIDE INSULATED ACCESS DOORS FOR INSULATED DUCTWORK. CONSTRUCT OF SAME OR THICKER GAUGE SHEET METAL AS DUCT IN WHICH IT IS INSTALLED. PROVIDE FLUSH FRAMES FOR UN-INSULATED DUCTS, AND EXTENDED FRAMES FOR EXTERNALLY INSULATED DUCTS. PROVIDE CONTINUOUS HINGE ON ONE SIDE, WITH ONE HANDLE-TYPE LATCH FOR ACCESS DOORS 12" HIGH AND SMALLER, AND TWO HANDLE-TYPE LATCHES FOR LARGER ACCESS DOORS. HVAC CONTROL SYSTEM: PROVIDE ALL THE NECESSARY CONTROLS AND CONTROL WIRING IN CONDUIT COMPATIBLE TO SYSTEMS SHOWN ON EQUIPMENT SCHEDULE M2.0. PROGRAMMABLE THERMOSTAT FOR EACH SYSTEM SHALL ENABLE THE SUPPLY FAN AND CYCLE THE COOLING AND HEATING STAGES TO MAINTAIN SPACE SET-POINT. SUPPLY FAN RUNS CONTINUOUSLY DURING THE OCCUPIED MODE. EACH THERMOSTAT SHALL HAVE A DEAD BAND OF AT LEAST 5 DEGREES (ADJ) WITHIN WHICH THE SUPPLY OF HEATING AND COOLING IS SHUT OFF, EACH THERMOSTAT SHALL HAVE SETBACK AND SET-UP CAPABILITY DURING THE UNOCCUPIED MODE. FOR SETBACK, THE HEATING SHALL RESTART AND TEMPORARILY OPERATE ACCORDING TO A SET-POINT ADJUSTABLE DOWN TO 55 DEGREES. FOR SET-UP, THE COOLING SHALL RESTART AND TEMPORARILY OPERATE ACCORDING TO A SET-POINT ADJUSTABLE UP TO 85 DEGREES OR TO PREVENT HIGH SPACE HUMIDITY LEVELS. EACH SYSTEM SHALL BE PROVIDED WITH A MOTORIZED OUTSIDE AIR DAMPER THAT WILL AUTOMATICALLY SHUT WHEN THE SYSTEM OR SPACES SERVED ARE NOT IN USE. VENTILATION OUTSIDE AIR DAMPERS SHALL BE CAPABLE OF AUTOMATICALLY CLOSING DURING PREOCCUPANCY BUILDING WARM-UP, COOL DOWN, AND SETBACK, EXCEPT WHEN VENTILATION REDUCES ENERGY COSTS (e.g., NIGHT PURGE) OR WHEN VENTILATION MUST BE SUPPLIED TO MEET CODE REQUIREMENTS. COMMISSIONING/VERIFICATION: HVAC CONTROL SYSTEM SHALL BE TESTED TO ENSURE THAT CONTROL ELEMENTS ARE CALIBRATED, ADJUSTED, AND IN PROPER WORKING CONDITION, AND THAT THE SYSTEM MEETS THE DESIGN REQUIREMENTS. TEST AND BALANCE: CONTRACT DIRECTLY A THIRD PARTY TO PROVIDE TEST AND BALANCE OF THE HVAC SYSTEM. THE GENERAL CONTRACTOR IS RESPONSIBLE FOR SCHEDULING. TEST AND ADJUST ALL MECHANICAL SYSTEM AND EQUIPMENT TO ASSURE PROPER BALANCE AND OPERATION. PERFORM TESTS IN ACCORDANCE WITH NEBB PROCEDURAL STANDARDS-1999 OR AABC 2002, AND ASHRAE STANDARD 111. ELIMINATE NOISE AND VIBRATION, AND ASSURE PROPER FUNCTION OF CONTROLS. SUBMIT COMPLETED TEST AND BALANCE REPORT TO OWNER'S REPRESENTATIVE. BALANCING CONTRACTOR SHALL BE INDEPENDENT AND CERTIFIED WITH NEBB OR AABC. BALANCE ALL SYSTEMS WITHIN 5% OF AIR FLOW INDICATED ON DRAWINGS, AND REPORT ALL DISCREPANCIES TO THE HVAC CONTRACTOR FOR CORRECTION. MARK FINAL BALANCE POSITIONS ON DAMPERS WITH PERMANENT MARKER. COMPLETION REQUIREMENTS: THE CONTRACTOR SHALL PROVIDE, WITHIN 90 DAYS AFTER THE DATE OF SYSTEM ACCEPTANCE, RECORD DRAWINGS AND AN OPERATING AND MAINTENANCE MANUAL TO THE BUILDING OWNER OR THE DESIGNATED REPRESENTATIVE OF THE OWNER. THE RECORD DRAWING SHALL BE OF THE ACTUAL INSTALLATION AND INCLUDE AS A MINIMUM THE LOCATION AND PERFORMANCE DATA ON EACH PIECE OF EQUIPMENT, GENERAL CONFIGURATION OF DUCT AND PIPE DISTRIBUTION SYSTEM INCLUDING SIZES, AND THE TERMINAL AIR OR WATER DESIGN FLOW RATES. THE OPERATING AND MAINTENANCE MANUALS SHALL BE IN ACCORDANCE WITH INDUSTRY-ACCEPTED STANDARDS AND SHALL INCLUDE, AT A MINIMUM, THE FOLLOWING; (A) SUBMITTAL DATA STATING EQUIPMENT SIZE AND SELECTED OPTIONS FOR EACH PIECE OF EQUIPMENT REQUIRING MAINTENANCE; (B) OPERATION MANUALS AND MAINTENANCE MANUALS FOR EACH PIECE OF EQUIPMENT REQUIRING MAINTENANCE, EXCEPT EQUIPMENT NOT FURNISHED AS PART OF THE PROJECT. REQUIRED ROUTINE MAINTENANCE ACTIONS SHALL BE CLEARLY IDENTIFIED; (C) NAMES AND ADDRESSES OF AT LEAST ONE SERVICE AGENCY; (D) HVAC CONTROLS SYSTEMS MAINTENANCE AND CALIBRATION INFORMATION, INCLUDING WIRING DIAGRAMS, SCHEMATICS, AND CONTROL SYSTEM SEQUENCE DESCRIPTIONS. DESIRED OR FIELD-DETERMINED SET-PIONTS SHALL BE PERMANENTLY RECORDED ON CONTROL DRAWINGS AT CONTROL DEVICES OR, FOR DIGITAL CONTROL SYSTEMS, IN PROGRAMMING COMMENTS; (E) A COMPLETE NARRATIVE OF HOW EACH SYSTEM EACH SYSTEM IS INTENDED TO OPERATE, INCLUDING SET-POINTS.

HVAC GENERAL NOTES

1. THE INTENT OF THESE PLANS AND SPECIFICATIONS IS TO INCLUDE ALL LABOR, EQUIPMENT, MATERIALS, AND SERVICES NECESSARY TO FURNISH, INSTALL, TEST, AND ADJUST A COMPLETE WORKABLE HEATING, VENTILATION, AND AIR CONDITIONING SYSTEM AS SHOWN, PRESCRIBED, OR REASONABLY IMPLIED BUT NOT LIMITED TO THAT EXPLICITLY INDICATED IN THE CONTRACT DOCUMENTS, BUT NECESSARY FOR THE PROPER EXECUTION AND COMPLETION OF THE INTENT THEREOF.
2. THE ENTIRE INSTALLATION SHALL CONFORM TO THE APPLICABLE CODES AND REGULATIONS REQUIRED BY AUTHORITIES HAVING JURISDICTION. IN THE EVENT OF CONFLICT BETWEEN SPECIFICATIONS, CODES, AND REGULATIONS, THE MORE RESTRICTIVE SHALL APPLY.
3. DRAWINGS FOR HVAC WORK ARE DIAGRAMATIC SHOWING THE GENERAL LOCATION, TYPE, LAYOUT, AND EQUIPMENT REQUIRED. THE DRAWINGS SHALL NOT BE SCALED FOR EXACT MEASUREMENT, REFER TO ARCHITECTURAL DRAWINGS FOR DIMENSIONS. PROVIDE ALL DUCTWORK, MATERIALS, CONNECTIONS, ACCESSORIES, FITTINGS, OFFSETS, TRANSITIONS, DAMPERS AS REQUIRED FOR A COMPLETE WORKABLE SYSTEM.
4. ALL EQUIPMENT SHALL BE INSTALLED IN STRICT ACCORDANCE WITH THE MANUFACTURER'S RECOMMENDATIONS AND APPROVED LISTING. ALL EQUIPMENT, PIPING AND SUPPORTS SHALL BE RESTRAINED IN ACCORDANCE WITH THE LATEST EDITION OF THE "GUIDLINES FOR SEISMIC RESTRAINTS OF MECHANICAL SYSTEMS AND PLUMBING PIPING SYSTEMS" BY THE SHEET METAL AND AIR CONDITIONING CONTRACTORS NATIONAL ASSOCIATION (SMACNA). ALL EQUIPMENT SHALL BE ANCHORED TO RESIST THE LATERAL FORCE REQUIREMENTS OF CHAPTER 16 OF THE 2022 CAILFORNIA BUILDING CODE.
5. COORDINATE THE INSTALLATION OF THE HVAC SYSTEM WITH ALL OTHER TRADES PRIOR TO FABRICATION OR INSTALLATION. COORDINATE THE LOCATIONS OF PENETRATIONS AND FINAL LOCATION OF ALL EQUIPMENT WITH THE GENERAL CONTRACTOR. PROVIDE EQUIPMENT WEIGHTS, EQUIPMENT DIMENSIONS, PLATFORM SIZES & LOCATIONS, CURB SIZES & LOCATIONS, CONCRETE PAD SIZES AND LOCATIONS AST REQUIRED. COORDINATE LOCATIONS OF GAS & CONDENSATE LINES WITH PLUMBING CONTRACTOR. COORDINTAE LOCATIONS OF POWER, DISCONNECTS, AND CONTROL CONDUIT WITH THE ELECTICAL CONTRACTOR. COORDINATE LOCATIONS OF ALL DIFFUSERS, REGISTERS, AND GRILLES WITH ARCHITECTURAL PLANS, ELECTRICAL LIGHTING PLANS AND ARCHITECTURAL ELEVATIONS.
6. DETAILS FOR EQUIPMENT PADS, PLATFORMS, AND FLASHINGS SHALL BE AS INDICATED BY THE ARCHITECTURAL/STRUCTURAL/CIVIL DRAWINGS, UNLESS NOTED OTHERWISE.
7. ALL EQUIPMENT, DUCTS, PIPING, SUPPORTS, AND OTHER DEVICES OUTSIDE OF THE BUILDING OR EXPOSED TO WEATHER, SHALL BE COMPLETELY WEATHER-PROOFED.
8. OUTSIDE AIR INTAKES SHALL BE AT LEAST 10 FT. AWAY OR 3 FT. BELOW ANY VENT OR EXHAUST DISCHARGE.
9. ALL DUCT SIZES ARE CLEAR INSIDE DIMENSIONS. DUCTWORK SHALL BE CONSTRUCTED, ERECTED, INSULATED AND TESTED IN ACCORDANCE CHAPTER 6 OF THE 2022 CALIFORNIA MECHANICAL CODE.
10. ALL EXHAUST FANS SHALL BE EQUIPPED WITH A BACK DRAFT DAMPER.
11. DUCT AND AIR TRANSFER PENETRATIONS THRU BUILDING ASSEMBLIES REQUIRING PROTECTION SHALL BE PROTECTED WITH FIRE DAMPERS, SMOKE DAMPERS, COMBINATION SMOKE/FIRE DAMPERS AND CEILING RADIATION DAMPERS IN ACCORDANCE WITH SECTION 607 OF THE CALIFORNIA MECHANICAL CODE. DUCTS NOT REQUIRING DAMPERS SHALL COMPLY WITH SECTION 714 & 717 OF THE 2022 CALIFORNIA BUILDING CODE.
12. INSTALL SMOKED DETECTORS AND PROVIDE FOR SMOKE DETECTION AND AUTOMATIC SHUT-OFF OF ALL AIR HANDLING EQUIPMENT IN ACCORDANCE WITH SECTION 606 OF THE 2022 CALIFORNIA MECHANICAL CODE.
13. UNLESS NOTED OTHERWISE, ALL LINE VOLTAGE WIRING, CONDUIT, FINAL CONNECTIONS, DISCONNECTS, STARTERS, AND OVER CURRENT PROTECTION DEVICES SHALL BE FURNISHED AND INSTALLED BY THE ELECTRICAL CONTRACTOR AS INDICATED ON THESE MECHANICAL DRAWINGS AND/OR ELECTRICAL DRAWINGS AND/OR ELECTRICAL SECTION OF THE SPECIFICATIONS.
14. INSTALL ALL LOW VOLTAGE HVAC CONTROL WIRE AND DEVICES PER PLAN. ALL WIRE SHALL BE IN CONDUIT PROVIDED AND INSTALLED BY THE ELECTICAL CONTRACTOR UNLESS NOTEDED OTHERWISE.
15. PROVIDE OWNER WITH THREE COPIES OF A CERTIFIED AIR BALANCE REPORT PREPARED IN BY A THIRD PARTY CERTIFIED BY THE AABC OR NEBB. TEST, ADJUST AND BALANCE THE HVAC SYSTEM IN ACCORDANCE WITH AABC OR NEBB PROCEDURES. PROVIDE START-UP/TEST REPORTS FOR ALL AIR HANDLING EQUIPMENT, FANS, AND REFRIGERATION EQUIPMENT. TEST AND VERIFY PROPER OPERATION OF ALL MAKE-UP AIR/EXHAUST AIR INTERLOCK SYSTEMS AND THIER SEQUENCES OF OPERATION. BALANCE ALL AIR FLOWS WITHIN 5% OF DESIGN VALUES. PERMANENTLY MARK BALANCE POSITION OF ALL REGULATING DEVICES.
16. PROVIDE OWNER WITH THREE SETS OF AS-BUILT PLANS AND OPERATIONS AND MAINTENANCE MANUALS. CLEARLY IDENTIFY ALL EQUIPMENT WITH PERMANENT PLASTIC OR METAL LABELS/TAGS (PEN MARKING NOT ACCEPTABLE).
17. PROVIDE ONE YEAR WARRANTY ON ALL LABOR, PARTS AND MATERIALS.
18. ANY CHANGE OR DEVIATION FROM THESE PLANS OR SPECIFICATIONS SHALL REQUIRE THE WRITTEN APPROVAL OF THE ENGINEER PRIOR TO COMMENCEMENT OF SUCH WORK. 19.0

a) DUCTS FOR DEMAND CONTROLLED VENTILATION SYSTEMS SHALL BE INSTALLED IN ACCORDANCE WITH THE FAN MANUFACTURER'S INSTALLATION INSTRUCTIONS, THE PROVISIONS ASHRAE 62.2, TABLE 5.3, OR THE AIRFLOW SHALL BE MEASURED AS REQUIRED BY AND IN COMPLIANCE WITH ASHRAE 62.2, 5.4.

1) DUCTS FOR KITCHEN COOKTOPS OR RANGES SHALL BE SHOWN OF METAL WITH A SMOOTH INTERIOR.

a) DUCTS FOR DOMESTIC CLOTHES DRYERS SHALL BE INSTALLED IN ACCORDANCE WITH CMC 504.0.

b) DUCTS FOR DOMESTIC CLOTHES DRYERS SHALL BE RIGID METALLIC DUCTS WITH A MINIMUM MILL THICKNESS OF 16 (0.016-INCH), SHALL HAVE A MINIMUM 4-INCH DIAMETER AND A SMOOTH INTERIOR. THE COMBINED HORIZONTAL AND VERTICAL LENGTH OF THE DUCTS OF THE DUCTS SHALL BE 14-FEET, WHICH SHALL BE REDUCED BY 2-FEET FOR EVERY 90-DEGREE ELBOW IN EXCESS OF TWO ELBOWS.

c) LISTED CLOTHES DRYER TRANSITION DUCTS NOT MORE THAN 6-FEET IN LENGTH SHALL BE PERMITTED TO CONNECT THE DRYER TO THE EXHAUST DUCTS AS LONG AS THEY ARE NOT CONCEALED WITHIN CONSTRUCTION, AND THEY ARE INSTALLED IN ACCORDANCE WITH THE MANUFACTURER'S INSTALLATION INSTRUCTIONS.

LEGEND

AxB		DUCT WORK (WIDTHxDEPTH)
AxB		LINED DUCT WORK (WIDTHxDEPTH DIMENSIONS ARE FOR I.D.)
		SUPPLY DUCT, SECTION
		RETURN DUCT, SECTION
		EXHAUST DUCT, SECTION
F OR D		RISE OR DROP IN DIRECTION OF AIR FLOW
	FLEX. CONN.	FLEXIBLE CONNECTION
		DUCT TRANSITION, ROUND AND RECTANGULAR
		SPLITTER DAMPER
		EXTRACTOR AT BRANCH DUCT
		TURNING VANES
		FLEXIBLE DUCT
		SINGLE LINE DUCT WORK
	AVD	AUTOMATIC VOLUME DAMPER
	MVD	MANUAL VOLUME DAMPER
	BDD	BACKDRAFT DAMPER
	MD	MODULATING DAMPER
	AFD	AUTOMATIC FIRE DAMPER
	AD	ACCESS DOOR
	SD	SUPPLY DIFFUSER
	RR	RETURN REGISTER
	ER	EXHAUST REGISTER
	SWR	SIDE WALL SUPPLY REGISTER
	SWE	SIDE WALL RETURN OR EXHAUST
	LD	LINEAR DIFFUSER
D.L.	DL	DOOR LOUVER
U.C.	UC	UNDER CUT DOOR
	VAV	VARIABLE AIR VOLUME
T		THERMOSTAT
S		DUCT SMOKE DECTECTOR
	T/B	TO BELOW
	F/B	FROM BELOW
	T/A	TO ABOVE
	F/A	FROM ABOVE

SPECIAL NOTICE TO CONTRACTORS

1. ALL CONTRACTORS (GENERAL CONTRACTOR AND SUB-CONTRACTORS) BIDDING THIS PROJECT ARE REQUIRED TO VISIT THE JOB SITE AND VERIFY THE EXISTING CONDITIONS PRIOR TO SUBMITTING THEIR BID. CONTRACTORS ARE TO CAREFULLY REVIEW ALL CONSTRUCTION DOCUMENTS AND NOTE ANY DISCREPANCIES BETWEEN THE CONSTRUCTION DOCUMENTS AND THE CONDITIONS OBSERVED AT THE JOB SITE PRIOR TO SUBMISSION OF ANY BID. THE BUILDING OWNER REPRESNENTATIVE LISTED BELOW MAY BE CONTACTED FOR ACCESS TO THE JOB SITE.
2. CONTRACTORS ARE RESPONSIBLE FOR VERIFYING THE LOCATION AND CONDITION OF ALL POINTS OF CONNECTION, LOCATION AND CONDITION OF ALL BUILDING (ROOF/FLOOR/CEILING) PENETRATIONS, LOCATION AND CONDITION OF ALL UTILITIES AND BUILDING SYSTEMS INCLUDING, BUT NOT LIMITED TO, GAS, WATER, SEWER, VENT, ELECTRICAL, BUILDING MECHANICAL SYSTEMS, DUCT CONNECTIONS, EXHAUST/OUTSIDE AIR CONNECTIONS, SECURITY, FIRE ALARM, DATA, AND PHONE PRIOR TO SUBMISSION OF THEIR BID.
3. ANY DISCREPANCIES BETWEEN THE CONSTRUCTION DOCUMENTS AND THE CONDITIONS OBSERVED SHALL BE BROUGHT TO THE ATTENTION, IN WRITING, TO THE ARCHITECT AND/OR ENGINEER PRIOR TO PROCEEDING WITH CONSTRUCTION.
4. NO WORK SHALL BE DONE ON ANY PART OF THE BUILDING BEYOND THE POINT INDICATED IN EACH SUCCESSIVE INSPECTION WITHOUT FIRST OBTAINING THE WRITTEN APPROVAL OF THE CODE OFFICIAL. NO CONSTRUCTION SHALL BE CONCEALED WITHOUT BEING INSPECTED AND APPROVED.

MECHANICAL LIST OF DRAWINGS (LoD):

SHEET TAG	TITLE	SCALE
M 0.00	MECH GENERAL NOTES AND SPECIFICATIONS.	NTS
M 0.01	MECHANICAL CODE CHECKING.	NTS
M 1.01	MAIN FLOOR - MECHANICAL LAYOUT.	3/8"=1'-0"
M 2.01	MECHANICAL EQUIPMENT SCHEDULE.	NTS
M 3.01	HEAT LOADS CALCULATIONS.	NTS
M 4.01	MECHANICAL EQUIPMENT DATA SHEETS.	NTS
M 5.01	MECHANICAL GENERAL DETAILS.	NTS

CLIENT:

ADDRESS:

CONFIDENTIALITY STATEMENT:

ALL DRAWINGS AND WRITTEN MATERIALS APPEARING HEREIN CONSTITUTE THE ORIGINAL AND UNPUBLISHED WORK OF THE DESIGNER AND THE SAME MAY NOT BE DUPLICATED, USED OR DISCLOSED WITHOUT CONSENT OF THE DESIGNER.

NOTES:

1. ALL DIMENSIONS HEREIN ARE IN IMPERIAL UNITS UNLESS STATED OTHERWISE.
2. THESE DRAWINGS ARE TO BE READ IN CONJUNCTION WITH ALL RELEVANT DESIGNER, ENGINEER OR SPECIALIST DRAWINGS AND SPECIFICATIONS.
3. THE CONTRACTOR MUST CHECK ALL DIMENSION AT SITE BEFORE COMMENCING WORK.
4. THE CONTRACTOR IS RESPONSIBLE FOR PROVIDING ALL NECESSARY TEMPORARY SUPPORT TO THE BUILDING AND ANY ADJACENT STRUCTURES.

REV. NO.	DESCRIPTION	DATE	BY

PROJECT:

TITLE:
MECH GENERAL NOTES AND SPECIFICATIONS

PROJ. NO.	PROJ. ENGR.	SCALE @ 24X36: NTS

DRAWING NO. **M 0 . 0 0**

REV.

DRAFT

CALIFORNIA MECHANICAL CODE CHECKING:

DUCT SIZING, THICKNESS & INSULATION

PLEASE REFER TO TABLE 506.2(1) FOR MINIMUM S HEET METAL THICKNESS FOR ROUND DUCTS

604.0 Insulation of Ducts.

604.1 General. Air ducts conveying air at temperatures exceeding 140°F (60°C) shall be insulated to maintain an insulation surface temperature of not more than 140°F (60°C). Factory-made air ducts and insulations intended for installation on the exterior of ducts shall be legibly printed with the name of the manufacturer, the thermal resistance (R) value at installed thickness, flame-spread index, and smoke developed index of the composite material. Internal duct liners and insulation shall be installed in accordance with SMACNA HVAC Duct Construction standards – Metal and Flexible. **[OSHPD 1, 1R, 2, 3, 4 & 5]** *Cold air ducts shall be insulated wherever necessary or to prevent condensation.*

Exceptions:

(1) Factory-installed plenums, casings, or ductwork furnished as part of HVAC equipment tested and rated in accordance with approved energy efficiency standards.

(2) Ducts or plenums located in conditioned spaces where heat gain or heat loss will not increase energy use.

(3) For runouts less than 10 feet (3048 mm) in length to air terminals or air outlets, the rated R-value of insulation need not exceed R-3.5.

(4) Backs of air outlets and outlet plenums exposed to unconditioned or indirectly conditioned spaces with face areas exceeding 5 square feet (0.5m^2) need not exceed R-2; those 5 square feet (0.5m^2) or smaller need to be insulated.

(5) Ducts and plenums used exclusively for evaporative cooling systems.

E 502.4 Ducts. Ducts shall be sized, installed, and tested in accordance with Section E 502.4.1 though Section E 502.4.4.

E 502.4.1 Insulation and Ducts. Portions of the air distribution system installed in or on buildings for heating and cooling shall be R-8. Where the mean outdoor dew-point temperature in a month exceeds 60°F (16°C), vapor retarders shall be installed on conditioned-air supply ducts. Vapor retarders shall have a water vapor permeance not exceeding 0.5 perm [2.87 E-11 kg/(Pa.s.m^2)] where tested in accordance with Procedure A in ASTM E96.

Insulation shall not be required where the ducts are within the conditioned space. [ASHRAE 90.2:6.4]

E 502.4.4 Duct Sizing. Duct systems shall be sized in accordance with ACCA Manual D or other methods approved by the Authority Having Jurisdiction with the velocity in the main duct not exceed 1000 feet per minute (ft/min) (5.08m/s) and the velocity in the secondary branch duct not to exceed 600 ft/min (3.048 m/s).

CONDENSATE DRAIN:

310.0 Condensate Wastes and Control.

310.1 Condensate Disposal. Condensate from air washers, air-cooling coils, condensing appliances, and the overflow from evaporative coolers and similar water-supplied equipment or similar air-conditioning equipment shall be collected and discharged to an approved plumbing fixture or disposal area. Where discharged into the drain system, equipment shall drain by means of an indirect waste pipe. The Waste pipe shall have a slope of not less than ⅛ inch per foot (10.4 mm/m) or 1 percent slope and shall be of approved corrosion-resistant material not smaller than the outlet size in accordance with Section 310.3 or Section 310.4 for air-cooling coils or condensing appliances, respectively. Condensate or wastewater shall not drain over a public way.

310.3 Condensate Waste Pipe Material and Sizing.
Condensate waste pipes from air-cooling coils shall be sized in accordance with the equipment capacity as specified in Table 310.3. The material of the piping shall comply with the pressure and temperature rating of the appliance or equipment, and shall be approved for use with the liquid being discharged.

TABLE 310.3
MINIMUM CONDENSATE WASTE PIPE SIZE

EQUIPMENT CAPACITY IN TONS OF REFRIGERATION	MINIMUM CONDENSATE PIPE DIAMETER (inches)
Up to 20	¾
21 – 40	1
41 – 90	1 ¼
91 – 125	1 ½
126 – 250	2

For SI units: 1 ton of refrigeration = 3.52 kW, 1 inch = 25 mm

310.3.1 Cleanouts. Condensate drain lines shall be configured or provided with a cleanout to permit the clearing of blockages and for maintenance without requiring the drain line to be cut.

310.5 Point of Discharge. Air conditioning condensate waste pipes shall connect indirectly, except where permitted in Section 310.6, to the drainage system through an air gap or air break to trapped and vented receptors, dry wells, leach pits, or the tailpiece of plumbing fixtures. A condensate drain shall be trapped in accordance with the appliance manufacturer's instructions or as approved.

310.6 Condensate Waste From Air-Conditioning Coils. Where the condensate waste from air-conditioning coils discharges by direct connection to a lavatory tailpiece or to an approved accessible inlet on a bathtub overflow, the connection shall be located in the area controlled by the same person controlling the air-conditioned space.

AIR INTAKE AND EXHAUST:

402.4 Outdoor Air Intake Protection. Required outdoor-air intakes shall be covered with a screen having not less than ¼ of an inch (6.4 mm) openings, and shall have not more than ½ of an inch (12.7 mm) openings.

402.4.1 Weather Protections. Outdoor air intakes that are part of the mechanical ventilation system shall be designed to manage rain entrainment, to prevent rain intrusion, and manage water from snow in accordance with ASHRAE 62.1.

402.5 Bathroom Exhaust Fans. [HCD 1 & HCD 2] *Each bathroom shall be mechanically ventilated in accordance with Division 4.5 of the California Green Building Standards Code (CALGreen).*

407.2.2 Exhaust Outlets. *Exhaust outlets shall be located a minimum of 10 feet (3048 mm) above adjoining grade and 10 feet (3048 mm) from doors, occupied areas, and operable windows.*

Exception: *Airborne infection isolation rooms shall comply with Section 414.1.*

701.10.1 Minimum Screen Mesh Size. Screens shall be not less than ¼ of an inch (6.4 mm) mesh. [NFPA 54:9.3.7.2]

311.3 Prohibited Source. Outside or return air for a heating or cooling air system shall not be taken from the following locations:

(1) Less than 10 feet (3048 mm) in distance from an appliance vent outlet, a vent opening of a plumbing drainage system, or the discharge outlet of an exhaust fan, unless the outlet is 3 feet (914 mm) above the outside-air inlet.

(2) Less than 10 feet (3048 mm) above the surface of an abutting public way, sidewalk, street, alley, or driveway.

RECTANGULAR DUCTS

SUPPORTS FOR RECTANGULAR DUCTS SHALL BE INSTALLED ON TWO OPPOSITE SIDES OF EACH DUCT AND SHALL BE RIVETED, BOLTED, OR METAL SCREWED TO EACH SIDE OF THE DUCT AT INTERVALS SPECIFIED.

METAL DUCTS

DUCTS SHALL BE SUPPORTED AT EACH CHANGE OF DIRECTION AND IN ACCORDANCE WITH SMACNA HVAC DUCT CONSTRUCTION STANDARDS-METAL AND FLEXIBLE. RISER DUCTS SHALL BE HELD IN PLACE BY MEANS OF METAL STRAPS OR ANGLES AND CHANNELS TO SECURE THE RISER TO THE STRUCTURE.

METAL DUCTS SHALL BE INSTALLED WITH NOT LESS THAN 4 INCHES (102 MM) SEPARATION FROM EARTH. DUCTS SHALL BE INSTALLED IN A BUILDING WITH CLEARANCES THAT WILL RETAIN THE FULL THICKNESS OF FIRE-PROOFING ON STRUCTURAL MEMBERS.

COMBUSTIBLES WITHIN DUCTS OR PLENUMS

MATERIALS EXPOSED WITHIN DUCTS OR PLENUMS SHALL BE NONCOMBUSTIBLE OR SHALL HAVE A FLAME SPREAD INDEX NOT TO EXCEED 25 AND A SMOKE-DEVELOPED INDEX NOT TO EXCEED 50, WHERE TESTED AS A COMPOSITE PRODUCT IN ACCORDANCE WITH ASTM E84 OR UL 723.

EXCEPTIONS:

1. RETURN-AIR AND OUTSIDE-AIR DUCTS, PLENUMS, OR CONCEALED SPACES THAT SERVE A DWELLING UNIT.
2. AIR FILTERS IN ACCORDANCE WITH THE REQUIREMENTS OF SECTION 311.2.
3. WATER EVAPORATION MEDIA IN AN EVAPORATIVE COOLER.
4. CHARCOAL FILTERS WHERE PROTECTED WITH AN APPROVED FIRE SUPPRESSION SYSTEM.
5. PRODUCTS LISTED AND LABELED FOR INSTALLATION WITHIN PLENUMS IN ACCORDANCE WITH SECTION 602.2.1 THROUGH SECTION 602.2.3.
6. SMOKE DETECTORS.
7. DUCT INSULATION, COVERINGS, AND LININGS AND OTHER SUPPLEMENTARY MATERIALS INSTALLED IN ACCORDANCE WITH SECTION 604.0.
8. MATERIALS IN A HAZARDOUS FABRICATION AREA INCLUDING THE AREAS ABOVE AND BELOW THE FABRICATION AREA SHARING A COMMON AIR RECIRCULATION PATH WITH THE FABRICATION AREA.

FACTORY-MADE AIR DUCTS

FACTORY-MADE AIR DUCTS SHALL BE LISTED AND LABELED IN ACCORDANCE WITH UL 181 AND INSTALLED IN ACCORDANCE WITH THE TERMS OF THEIR LISTING, THE MANUFACTURER'S INSTALLATION INSTRUCTIONS, AND SMACNA HVAC DUCT CONSTRUCTION STANDARDS-METAL AND FLEXIBLE.

FACTORY-MADE AIR DUCTS SHALL NOT BE USED FOR VERTICAL RISERS IN AIR-DUCT SYSTEMS SERVING MORE THAN TWO STORIES AND SHALL NOT PENETRATE A FIRE-RESISTANCE-RATED ASSEMBLY OR CONSTRUCTION.

FACTORY-MADE AIR DUCTS SHALL BE INSTALLED WITH NOT LESS THAN 4 INCHES (102 MM) OF SEPARATION FROM EARTH, EXCEPT WHERE INSTALLED AS A LINER INSIDE OF CONCRETE, TILE, OR METAL PIPE AND SHALL BE PROTECTED FROM PHYSICAL DAMAGE.

THE TEMPERATURE OF THE AIR TO BE CONVEYED IN A DUCT SHALL NOT EXCEED 250°F (121° C). FLEXIBLE AIR CONNECTORS SHALL NOT BE PERMITTED.

NOTES ON DUCTS MATERIAL & CONSTRUCTION:

FLEXIBLE AIR DUCTS

FLEXIBLE AIR DUCTS SHALL COMPLY WITH UL 181, AND SHALL BE INSTALLED IN ACCORDANCE WITH THE MANUFACTURER'S INSTALLATION INSTRUCTIONS AND SMACNA HVAC DUCT CONSTRUCTION STANDARDS-METAL AND FLEXIBLE.

FLEXIBLE AIR DUCT INSTALLATIONS SHALL COMPLY WITH THE FOLLOWING:

1. DUCTS SHALL BE INSTALLED USING THE MINIMUM REQUIRED LENGTH TO MAKE THE CONNECTION.
2. HORIZONTAL DUCT RUNS SHALL BE SUPPORTED AT NOT MORE THAN 4 FEET (1219 MM) INTERVALS.
3. VERTICAL RISERS SHALL BE SUPPORTED AT NOT MORE THAN 6 FEET (1829 MM) INTERVALS.
4. SAG BETWEEN SUPPORT HANGERS SHALL NOT EXCEED 1/2 INCH (12.7 MM) PER FOOT (305 MM) OF SUPPORT SPACING.
5. SUPPORTS SHALL BE RIGID AND SHALL BE NOT LESS THAN 11/2 INCHES (38 MM) WIDE AT POINT OF CONTACT WITH THE DUCT SURFACE.
6. DUCT BENDS SHALL BE NOT LESS THAN ONE DUCT DIAMETER BEND RADIUS.
7. SCREWS SHALL NOT PENETRATE THE INNER LINER OF NON-METALLIC FLEXIBLE DUCTS UNLESS PERMITTED IN ACCORDANCE WITH THE MANUFACTURER'S INSTALLATION INSTRUCTIONS.
8. FITTINGS FOR ATTACHING NON-METALLIC DUCTS SHALL BE BEADED AND HAVE A COLLAR LENGTH OF NOT LESS THAN 2 INCHES (51 MM) FOR ATTACHING THE DUCT.

EXCEPTION: A BEAD SHALL NOT BE REQUIRED WHERE METAL WORM-GEAR CLAMPS ARE USED OR WHERE ATTACHING METALLIC DUCTS USING SCREWS IN ACCORDANCE WITH THE MANUFACTURER'S INSTALLATION INSTRUCTIONS.

9. DUCT INNER LINER SHALL BE INSTALLED AT NOT LESS THAN 1 INCH (25.4 MM) ON THE COLLAR AND PAST THE BEAD PRIOR TO THE APPLICATION OF THE TAPE AND MECHANICAL FASTENER. WHERE MASTIC IS USED INSTEAD OF TAPE, THE MASTIC SHALL BE APPLIED IN ACCORDANCE THE MASTIC MANUFACTURER'S INSTRUCTIONS.
10. DUCT OUTER VAPOR BARRIERS SHALL BE SECURED USING TWO WRAPS OF APPROVED TAPE. A MECHANICAL FASTENER SHALL BE PERMITTED TO BE USED IN PLACE OF, OR IN COMBINATION WITH, THE TAPE.
11. FLEXIBLE AIR DUCTS SHALL NOT PENETRATE A FIRE-RESISTANCE-RATED ASSEMBLY OR CONSTRUCTION.
12. THE TEMPERATURE OF THE AIR TO BE CONVEYED IN A FLEXIBLE AIR DUCT SHALL NOT EXCEED 250°F (121 °C).
13. FLEXIBLE AIR DUCTS SHALL BE SEALED IN ACCORDANCE WITH SECTION 603.10.

BCE COMPANY

CLIENT:

ADDRESS:

CONFIDENTIALITY STATEMENT:

ALL DRAWINGS AND WRITTEN MATERIALS APPEARING HEREIN CONSTITUTE THE ORIGINAL AND UNPUBLISHED WORK OF THE DESIGNER AND THE SAME MAY NOT BE DUPLICATED, USED OR DISCLOSED WITHOUT CONSENT OF THE DESIGNER.

NOTES:

1. ALL DIMENSIONS HEREIN ARE IN IMPERIAL UNITS UNLESS STATED OTHERWISE.
2. THESE DRAWINGS ARE TO BE READ IN CONJUNCTION WITH ALL RELEVANT DESIGNER, ENGINEER OR SPECIALIST DRAWINGS AND SPECIFICATIONS.
3. THE CONTRACTOR MUST CHECK ALL DIMENSION AT SITE BEFORE COMMENCING WORK.
4. THE CONTRACTOR IS RESPONSIBLE FOR PROVIDING ALL NECESSARY TEMPORARY SUPPORT TO THE BUILDING AND ANY ADJACENT STRUCTURES.

REV. NO.	DESCRIPTION	DATE	BY

PROJECT:

TITLE:
MECHANICAL CODE CHECKING.

PROJ. NO.	PROJ. ENGR.	SCALE @ 24X36: NTS

DRAWING NO. **M 0 . 0 1**

REV.

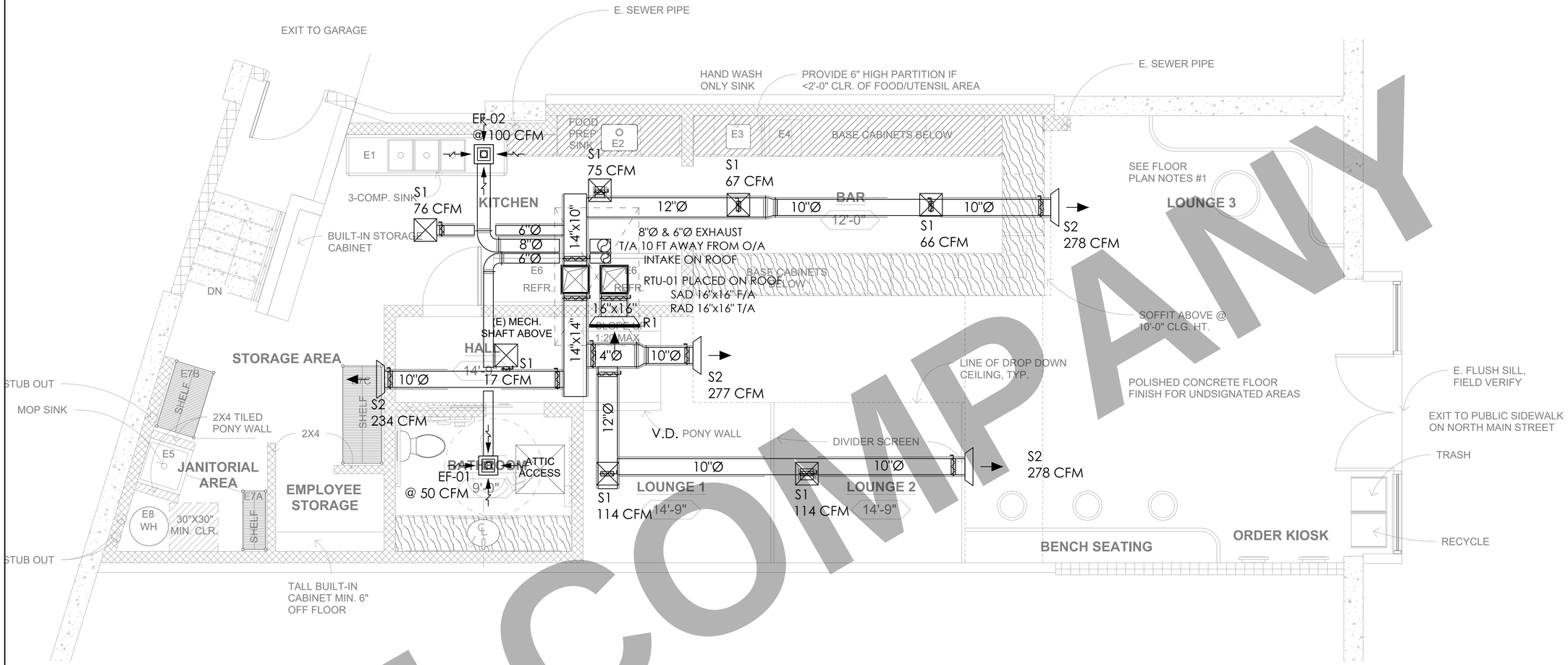

NOT FOR CONSTRUCTION

GENERAL NOTES:

1. MECHANICAL CONTRACTOR TO COORDINATE ROUTING AND LOCATION OF MECHANICAL COMPONENTS AND EQUIPMENT WITH ALL OTHER TRADES AND EXISTING FIELD CONDITIONS PRIOR TO PERFORMING WORK.
2. CONTRACTOR TO CUT AND PATCH AS REQUIRED TO PERFORM THE WORK.
3. ACCESS DOORS ARE REQUIRED FOR ANY COMPONENT REQUIRING ACCESS ABOVE HARD LID CEILINGS. COORDINATE SIZE, LOCATION AND FINISH WITH ARCHITECT PRIOR TO PERFORMING WORK.
4. REFER TO THE DIAGRAMS THAT APPLY TO THIS SHEET WHICH PROVIDE GENERAL GUIDANCE FOR INSTALLATION THOUGH NOT ALL COMPONENTS AND ACCESSORIES MAY BE SHOWN.
5. PRIOR TO INSTALLATION, CONFIRM SPECIFIC LOCATION FOR ALL THERMOSTATS / SENSORS WITH ARCHITECT. MOUNT AT 48" A.F.F. OR IN ACCORDANCE WITH ADA REQUIREMENTS. PROVIDE LOCKING COVERS.
6. COORDINATE AND CONFIRM BORDER, FRAME, FINISH, AND LOCATION WITH ARCHITECT PRIOR TO ORDERING.
7. ANY PENETRATIONS THROUGH WALL STUDS, FLOOR JOISTS, OR ROOF TO BE IN ACCORDANCE WITH THE LATEST ADOPTED BUILDING CODE.
8. DUCT DIMENSIONS SHOWN ARE CLEAR INSIDE DIMENSIONS.
9. CONTRACTOR TO CONFIRM ADEQUATE RETURN AIR PATH BACK TO MAIN AIR HANDLING UNIT.

CLIENT:

ADDRESS:

CONFIDENTIALITY STATEMENT:

ALL DRAWINGS AND WRITTEN MATERIALS APPEARING HEREIN CONSTITUTE THE ORIGINAL AND UNPUBLISHED WORK OF THE DESIGNER AND THE SAME MAY NOT BE DUPLICATED, USED OR DISCLOSED WITHOUT CONSENT OF THE DESIGNER.

NOTES:

1. ALL DIMENSIONS HEREIN ARE IN IMPERIAL UNITS UNLESS STATED OTHERWISE.
2. THESE DRAWINGS ARE TO BE READ IN CONJUNCTION WITH ALL RELEVANT DESIGNER, ENGINEER OR SPECIALIST DRAWINGS AND SPECIFICATIONS.
3. THE CONTRACTOR MUST CHECK ALL DIMENSION AT SITE BEFORE COMMENCING WORK.
4. THE CONTRACTOR IS RESPONSIBLE FOR PROVIDING ALL NECESSARY TEMPORARY SUPPORT TO THE BUILDING AND ANY ADJACENT STRUCTURES.

REV. NO.	DESCRIPTION	DATE	BY

PROJECT:

TITLE:
MECH. LAYOUTS AND EQUIPMENT SCHEDULE.

PROJ. NO.	PROJ. ENGR.	SCALE @ 24X36:
		3/8"=1'-0"

DRAWING NO.
M 1 . 0 1

REV.

SCHEDULE No. 1
ROOF-TOP UNIT SCHEDULE

TAG	LOCATION / SERVE	MANUF.	MODEL	NOMINAL COOLING CAPACITY	SEER / EER	HEATING CAPACITY (MBH)			BLOWER DATA			ELECTRICAL DATA			ACCESSORIES
						INPUT	OUTPUT	EFF. %	SUPPLY	ESP	ECON. O/A %	MOCP	MCA	V/PH/Hz	
RTU-01	ROOF	CARRIER	50FCQ-A05	4 TONS	SEER 14.0 EER 11.8	90 MBH	73 MBH	81 %	1,600 CFM	250 Pa	50%	50	35	208-230/1/60	CHECK NOTES BELOW 1 TO 5

1. BELT DRIVE BOTTOM DISCHARGE.
2. PROVIDE 14"ROOF CURB, NON-FUSED DISCONNECT SWITCH.
3. PROVIDE HAIL GUARDS.
4. PROVIDE TEMPERATURE ECONOMIZER, BAROMETRIC RELIEF DAMPER AND WEATHER HOOD.
5. COMMERCIAL PROGRAMMABLE THERMOSTAT, 2-STAGE HEATING, 2-STAGE COOLING, 7-DAY PROGRAMMABLE.

SCHEDULE No. 2
FAN SCHEDULE

TAG	EF-01	EF-02
LOCATION	BATHROOM	KITCHEN
SELECTED FLOW (CFM)	50	100
SELECTED PRESSURE DROP (IN. H2O)	0.25"	0.25"
ELECTRICAL (V / PH / HZ)	120 / 1 / 60	120 / 1 / 60
POWER / Amps	25 W	100 W
MOTOR SPEED (RPS)	MULTI SPEED	MULTI SPEED
FAN TYPE	CEILING FANS	CEILING FANS
MANUFACTURER	PANASONIC	PANASONIC
MODEL	WHISPER FV-0511VKS2	WHISPER FV-0511VKS2

NOTES:

1. PROVIDE UL LISTING.
2. PROVIDE ENERGY STAR COMPLIANCE.
3. INTERLOCK WITH WALL SWITCH.
4. PROVIDE MOTOR WITH THERMAL OVERLOADS.

SCHEDULE No. 3
AIR OUTLETS

TAG	DESCRIPTION	MANUFACTURER	MODEL	MOUNTING
S1	SUPPLY DIFFUSER	TITUS	14in. x 14in.	Duct Mounted
S2	SUPPLY DIFFUSER	TITUS	16in. x 8in.	Duct Mounted
R1	RETURN BELLMOUTH	TITUS	24in. x 16in.	Duct Mounted

NOTES:

1. COORDINATE FINISH, COLOR, BORDER AND EXACT LOCATION WITH OWNER PRIOR TO ORDERING.
2. PROVIDE OPPOSED BLADE DAMPER ACCESSIBLE THROUGH DIFFUSER FACE FOR GYP BD. CEILING INSTALLATIONS.
3. PROVIDE DUCT TRANSITIONS AS REQUIRED.
4. RETURNS R1 ARE PROVIDED WITH PROPER FILTERS.

BCE COMPANY

CLIENT:

ADDRESS:

CONFIDENTIALITY STATEMENT:

ALL DRAWINGS AND WRITTEN MATERIALS APPEARING HEREIN CONSTITUTE THE ORIGINAL AND UNPUBLISHED WORK OF THE DESIGNER AND THE SAME MAY NOT BE DUPLICATED, USED OR DISCLOSED WITHOUT CONSENT OF THE DESIGNER.

NOTES:

1. ALL DIMENSIONS HEREIN ARE IN IMPERIAL UNITS UNLESS STATED OTHERWISE.
2. THESE DRAWINGS ARE TO BE READ IN CONJUNCTION WITH ALL RELEVANT DESIGNER, ENGINEER OR SPECIALIST DRAWINGS AND SPECIFICATIONS.
3. THE CONTRACTOR MUST CHECK ALL DIMENSION AT SITE BEFORE COMMENCING WORK.
4. THE CONTRACTOR IS RESPONSIBLE FOR PROVIDING ALL NECESSARY TEMPORARY SUPPORT TO THE BUILDING AND ANY ADJACENT STRUCTURES.

REV. NO.	DESCRIPTION	DATE	BY

PROJECT:

TITLE:
MECHANICAL EQUIPMENT SCHEDULE.

PROJ. NO.	PROJ. ENGR.	SCALE @ 24X36:
		NTS

DRAWING NO.
M 2 . 0 1

REV.

Air System Sizing Summary for RTU

Project Name: 1910 North Main St_Boba Tea Cafe — 02/16/2023
Prepared by: E. MJ — 01:11PM

Air System Information

Air System Name	RTU		Number of zones	1
Equipment Class	PKG ROOF		Floor Area	1414.0 ft²
Air System Type	SZCAV		Location	Walnut Creek, California

Sizing Calculation Information

Calculation Months	Jan to Dec	Zone CFM Sizing	Sum of space airflow rates
Sizing Data	Calculated	Space CFM Sizing	Individual peak space loads

Central Cooling Coil Sizing Data

Total coil load	2.8	Tons	Load occurs at	Jul 1500	
Total coil load	33.2	MBH	OA DB / WB	85.0 / 64.0	°F
Sensible coil load	33.2	MBH	Entering DB / WB	79.9 / 64.4	°F
Coil CFM at Jul 1500	1562	CFM	Leaving DB / WB	60.2 / 57.3	°F
Max block CFM	1562	CFM	Coil ADP	58.0	°F
Sum of peak zone CFM	1562	CFM	Bypass Factor	0.100	
Sensible heat ratio	1.000		Resulting RH	54	%
CFM/Ton	564.0		Design supply temp.	58.0	°F
ft²/Ton	510.6		Zone T-stat Check	1 of 1	OK
BTU/(hr·ft²)	23.5		Max zone temperature deviation	0.0	°F
Water flow @ 10.0 °F rise	N/A				

Central Heating Coil Sizing Data

Max coil load	31.8	MBH	Load occurs at	Des Htg	
Coil CFM at Des Htg	1562	CFM	BTU/(hr·ft²)	22.5	
Max coil CFM	1562	CFM	Ent. DB / Lvg DB	54.6 / 73.5	°F
Water flow @ 20.0 °F drop	N/A				

Supply Fan Sizing Data

Actual max CFM	1562	CFM	Fan motor BHP	0.00	BHP
Standard CFM	1562	CFM	Fan motor kW	0.00	kW
Actual max CFM/ft²	1.10	CFM/ft²	Fan static	0.00	in wg

Outdoor Ventilation Air Data

Design airflow CFM	663	CFM	CFM/person	11.63	CFM/person
CFM/ft²	0.47	CFM/ft²			

Zone Sizing Summary for RTU

Project Name: 1910 North Main St_Boba Tea Cafe — 02/16/2023
Prepared by: E. MJ — 01:11PM

Air System Information

Air System Name	RTU		Number of zones	1
Equipment Class	PKG ROOF		Floor Area	1414.0 ft²
Air System Type	SZCAV		Location	Walnut Creek, California

Sizing Calculation Information

Calculation Months	Jan to Dec	Zone CFM Sizing	Sum of space airflow rates
Sizing Data	Calculated	Space CFM Sizing	Individual peak space loads

Zone Terminal Sizing Data

Zone Name	Design Supply Airflow (CFM)	Minimum Supply Airflow (CFM)	Zone CFM/ft²	Reheat Coil Load (MBH)	Reheat Coil Water gpm @ 20.0 °F	Zone Htg Unit Coil Load (MBH)	Zone Htg Unit Water gpm @ 20.0 °F	Mixing Box Fan Airflow (CFM)
Zone 1	1562	1562	1.10	0.0	-	0.0	-	0

Zone Peak Sensible Loads

Zone Name	Zone Cooling Sensible (MBH)	Time of Peak Sensible Cooling Load	Zone Heating Load (MBH)	Zone Floor Area (ft²)
Zone 1	27.1	Jun 1600	6.2	1414.0

Space Loads and Airflows

Zone Name / Space Name	Mult.	Cooling Sensible (MBH)	Time of Peak Sensible Load	Air Flow (CFM)	Heating Load (MBH)	Floor Area (ft²)	Space CFM/ft²
Zone 1							
BAR	1	2.3	Jan 2300	126	0.0	180.0	0.70
BATHROOM	1	0.5	Jan 2300	50	0.0	63.0	0.79
EMPLOYEE STORAGE	1	0.1	Jan 2300	7	0.0	28.0	0.24
HALL	1	0.3	Jan 2300	16	0.0	68.0	0.24
JANITORIAL AREA	1	1.8	Jun 1700	99	1.0	41.0	2.41
KITCHEN	1	2.6	Jan 2300	143	0.0	173.0	0.83
LOUNGE 1	1	2.0	Jan 2300	108	0.0	84.0	1.29
LOUNGE 2	1	2.0	Jan 2300	108	0.0	84.0	1.29
LOUNGE 3	1	14.5	Jul 0900	789	4.0	521.0	1.51
STORAGE AREA	1	2.1	Jun 1700	115	1.1	172.0	0.67

AS PER CMC 2022, TABLE 402.1: MINIMUM VENTILATION RATES IN BREATHING ZONE

S.N.	SPACE NAME	AREA (FT2)	CFM/FT2	CFM-A	# OF OCC. PER 1000 FT2	# OF PERS.	CFM/PERS.	CFM-B	TOTAL CFM
1	LOUNGE 1	84	0.18	15	100	7	7.5	53	68
2	LOUNGE 2	84	0.18	15	100	7	7.5	53	68
3	LOUNGE 3	521	0.18	94	100	35	7.5	263	356
4	BAR	180	0.18	32	100	3	7.5	23	55
5	KITCHEN	173	0.12	21	20	3	7.5	23	43
6	HALL	68	0.06	4	-	-	-	0	4
7	STORAGE AREA	172	0.06	10	-	-	-	0	10
8	JANITORIAL AREA	41	0.06	2	5	1	5	5	7
9	EMPLOYEE STORAGE	28	0.06	2	-	-	-	0	2
10	BATHROOM	63		0	-	-	-	0	50
TOTAL		1,414	-	196	-	56	-	418	663

BCE COMPANY

CLIENT:

ADDRESS:

CONFIDENTIALITY STATEMENT:

ALL DRAWINGS AND WRITTEN MATERIALS APPEARING HEREIN CONSTITUTE THE ORIGINAL AND UNPUBLISHED WORK OF THE DESIGNER AND THE SAME MAY NOT BE DUPLICATED, USED OR DISCLOSED WITHOUT CONSENT OF THE DESIGNER.

NOTES:

1. ALL DIMENSIONS HEREIN ARE IN IMPERIAL UNITS UNLESS STATED OTHERWISE.
2. THESE DRAWINGS ARE TO BE READ IN CONJUNCTION WITH ALL RELEVANT DESIGNER, ENGINEER OR SPECIALIST DRAWINGS AND SPECIFICATIONS.
3. THE CONTRACTOR MUST CHECK ALL DIMENSION AT SITE BEFORE COMMENCING WORK.
4. THE CONTRACTOR IS RESPONSIBLE FOR PROVIDING ALL NECESSARY TEMPORARY SUPPORT TO THE BUILDING AND ANY ADJACENT STRUCTURES.

REV. NO.	DESCRIPTION	DATE	BY

PROJECT:

TITLE: **MECHANICAL HEAT LOADS CALCULATIONS.**

PROJ. NO. | PROJ. ENGR. | SCALE @ 24X36: NTS

DRAWING NO. **M 3 . 0 1** | REV.

Carrier
Turn to the experts

Product Data

WeatherMaker®
Single Packaged Heat Pump Rooftop

3 to 6 Nominal Tons

ecoblue™ technology

50FCQ*04, 05, 06, 07

Single-Packaged Heat Pump with Optional Electric Heat and Puron® Refrigerant (R-410A)

© 2021 Carrier

Capacity ratings

Carrier

AHRI RATINGS

COOLING MODE

50FCQ	COOLING STAGES	NOM. CAPACITY (tons)	NET COOLING CAPACITY (Btuh)	TOTAL POWER (kW)	SEER	EER	IEER w/ 2-SPEED
A04	1	3	36,200	3.1	14.3	11.8	n/a
A05	1	4	49,500	4.2	14.3	11.8	n/a
A06	1	5	60,500	5.1	14.3	11.8	n/a
M07	2	6	71,000	6.3	n/a	11.2	15.0

HEATING MODE

50FCQ	HSPF	HIGH HEATING CAPACITY (Btuh)	HIGH HEAT COP	LOW HEATING CAPACITY (Btuh)	LOW HEAT COP
A04	8.2	34,000	3.7	17,000	2.25
A05	8.2	46,000	3.7	23,600	2.28
A06	8.2	56,500	3.8	30,000	2.30
M07	n/a	64,500	3.6	35,000	2.40

LEGEND
- AHRI — Air Conditioning, Heating and Refrigeration Institute
- ASHRAE — American Society of Heating, Refrigerating and Air Conditioning Engineers
- COP — Coefficient of Performance
- EER — Energy Efficiency Ratio
- HSPF — Heating Seasonal Performance Factor
- IEER — Integrated Energy Efficiency Ratio
- SEER — Seasonal Energy Efficiency Ratio

NOTES:
1. Rated and certified under AHRI Standard 210/240 (04-06 size) and 340/360 (07 size).
2. Ratings are based on:
Cooling Standard: 80°F (27°C) db, 67°F (19°C) wb indoor air temperature and 95°F (35°C) db outdoor air temperature.
High Temperature Heating Ratings: 47°F (8°C) db, 43°F (6°C) wb outdoor air temperature and 70°F (21°C) entering indoor coil air.
Low Temperature Heating Ratings: 17°F (–8°C) db, 15°F (–9°C) wb outdoor air temperature and 70°F (21°C) entering indoor coil air.
3. All 50FCQ units comply with ASHRAE 90.1 Energy Standard for minimum SEER and EER requirements.

cULus

AHRI CERTIFIED™ www.ahridirectory.org — Unitary Small HP AHRI Standard 210/240

AHRI CERTIFIED™ www.ahridirectory.org — Unitary Large HP AHRI Standard 340/360

Carrier

50FCQ*04-07 COOLING ELECTRICAL DATA

50FCQ UNIT	V-Ph-Hz	UNIT VOLTAGE RANGE MIN	UNIT VOLTAGE RANGE MAX	COMPRESSOR RLA	COMPRESSOR LRA	OFM (EA) WATTS	OFM (EA) FLA	IFM TYPE	IFM EFFICIENCY AT FULL LOAD	IFM FLA	POWER EXHAUST KIT QTY	POWER EXHAUST FLA (EA KIT)
A04	208-1-60	187	253	15.4	84	190	1.5	STD	84%	3.4	1	1.9
								MED	84%	5.1		
								HIGH	85%	7.3		
	230-1-60	187	253	15.4	84	190	1.5	STD	84%	3.4	1	1.9
								MED	84%	5.1		
								HIGH	85%	7.3		
	208-3-60	187	253	10.4	73	190	1.5	STD	84%	3.4	1	1.9
								MED	84%	5.1		
								HIGH	85%	7.3		
	230-3-60	187	253	10.4	73	190	1.5	STD	84%	3.4	1	1.9
								MED	84%	5.1		
								HIGH	85%	7.3		
	460-3-60	414	506	5.8	38	190	0.8	STD	85%	0.9	1	1.0
								MED	85%	1.2		
								HIGH	84%	1.5		
	575-3-60	518	633	3.8	37	190	0.6	STD	84%	0.8	1	1.9
								MED	84%	1.1		
								HIGH	85%	1.5		
A05	208-1-60	187	253	19.8	130	325	1.5	STD	87%	5.0	1	1.9
								MED	86%	7.1		
								HIGH	84%	8.8		
	230-1-60	187	253	19.8	130	325	1.5	STD	87%	5.0	1	1.9
								MED	86%	7.1		
								HIGH	84%	8.8		
	208-3-60	187	253	13.7	83	325	1.5	STD	87%	5.0	1	1.9
								MED	86%	7.1		
								HIGH	85%	5.1		
	230-3-60	187	253	13.7	83	325	1.5	STD	87%	5.0	1	1.9
								MED	86%	7.1		
								HIGH	85%	5.1		
	460-3-60	414	506	6.2	41	325	0.8	STD	85%	1.2	1	1.0
								MED	86%	1.5		
								HIGH	88%	2.4		
	575-3-60	518	633	4.8	33	325	0.6	STD	84%	1.1	1	1.9
								MED	85%	1.5		
								HIGH	88%	2.1		
A06	208-1-60	187	253	24.4	144	325	1.5	STD	86%	7.2	1	1.9
								MED	84%	8.6		
								HIGH	87%	8.1		
	230-1-60	187	253	24.4	144	325	1.5	STD	86%	7.2	1	1.9
								MED	84%	8.6		
								HIGH	87%	8.1		
	208-3-60	187	253	16.0	110	325	1.5	STD	86%	7.2	1	1.9
								MED	84%	8.6		
								HIGH	84%	6.4		
	230-3-60	187	253	16.0	110	325	1.5	STD	86%	7.2	1	1.9
								MED	84%	8.6		
								HIGH	84%	6.4		
	460-3-60	414	506	7.8	52	325	0.8	STD	86%	1.5	1	1.0
								MED	86%	1.9		
								HIGH	88%	2.9		
	575-3-60	518	633	5.7	39	325	0.6	STD	84%	1.5	1	1.9
								MED	85%	1.8		
								HIGH	87%	2.5		

Base unit dimensions

50FCQ*04-07 BASE UNIT DIMENSIONS

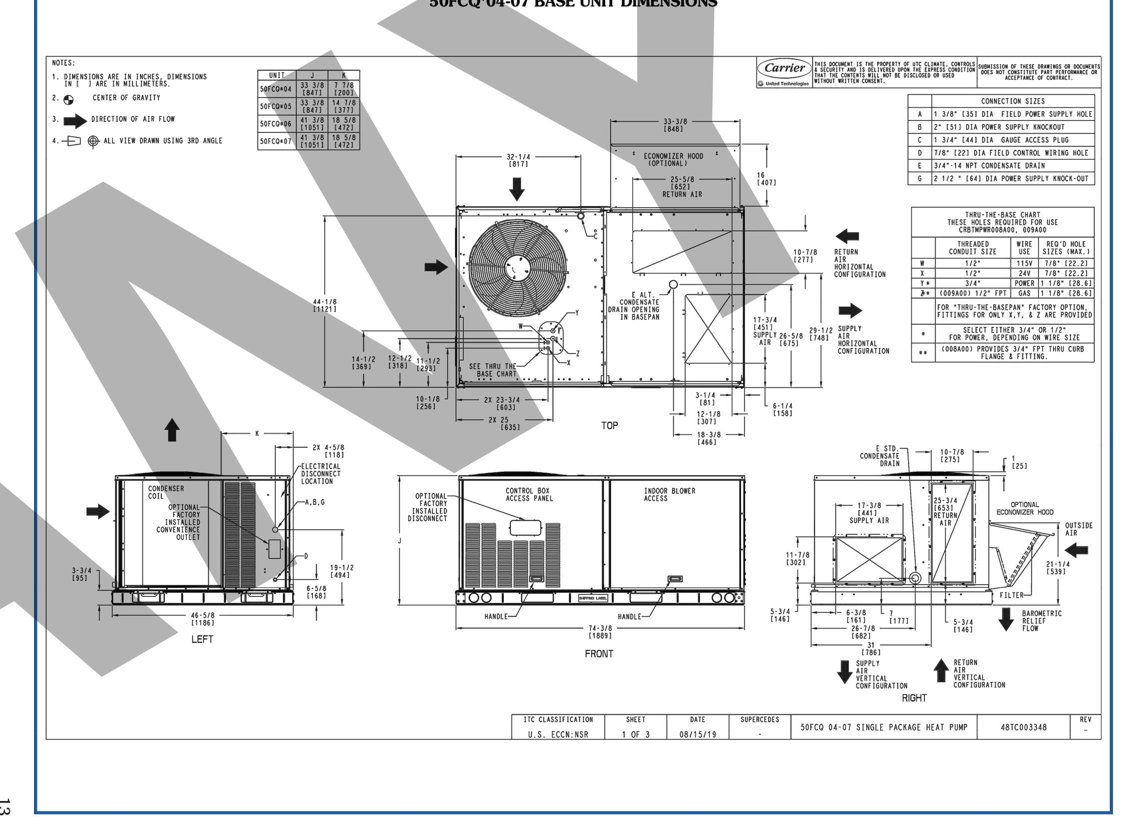

Panasonic

WhisperGreen® Select™ Connected Ventilation Fans

WhisperGreen® Select™ VENTILATION FAN

Fan Only Models: FV-0511VK2, FV-0511VKS2, FV-1115VK2

Fan/Light Models: FV-0511VKL2, FV-0511VKSL2, FV-1115VKL2

HEALTHY AIR, HEALTHY HOME

True Flow ratings at **0.375"** static pressure provide powerful airflow to assure code compliant, healthy homes.

KEY FEATURES

- Precision, whole-house ventilation solution ideal for use in the bathroom, laundry room, sun room, basement or garage
- Helps assure good indoor air quality for a healthy home and healthy living
- Operates as a standalone fan or as part of the Cosmos™ Healthy Home System through two-way wireless communication
- Customizable, connected fan and fan/dimmable LED light combinations
- Pick-A-Flow airflow selector (50-80-110 or 110-130-150 CFM models) combined with SmartFlow™ technology simplifies the selection process and ensures optimum performance to meet code and reduce callbacks
- Elegant grille design complements the aesthetics of any room
- Single-hinged Flex-Z Fast™ bracket provides flexible, fast and easy installation
- Can be used to comply with ASHRAE 62.2, LEED, CALGreen, IAP, California Title 24, WA Ventilation Code and ENERGY STAR for Homes 3.0

ADDITIONAL BENEFITS

- Ideal IAQ solution for green builders
- Environmentally friendly 26 gauge housing using Zinc-Aluminum-Magnesium (ZAM) coating
- Integrated 4" or 6" dual duct adapter enhances installation options / Fits in 2 x 8 construction
- Built-in metal flange provides blocking for penetrations through drywall as an air barrier, and assists with the decrease in leakage in the building envelope during blower door testing
- Suitable for installation in ceilings insulated up to R60
- Dual access junction box simplifies wiring in tight spaces
- UL Listed for tub/shower enclosure when GFCI protected
- UL Listed for use with the Panasonic Ceiling Radiation Damper (model # PC-RD05C5)
- 6-year warranty on ECM motor, 5 years on LED, 3 years on parts

*Industry research indicates static pressure in typical installations ranges from 0.20" to 0.375".

reinventingventing.com

ENERGY STAR Most Efficient 2021 www.energystar.gov

One Connected Fan. Endless Possibilities.

The customizable IAQ solution for virtually any space

For over 25 years, Panasonic has developed innovative solutions that promote better indoor air quality and healthy home building. On our mission to help you build healthy homes, WhisperGreen® Select™ offers a powerful connected IAQ solution that delivers healthy indoor air quality for healthy living in any space. Now even more versatile, it operates as a standalone fan or as part of the Cosmos™ Healthy Home System through two-way wireless communication.

WHISPERGREEN SELECT™ IS AS EASY AS 1-2-3!

Step 1: Select a Base Fan Model

Select a base model to start building the perfect IAQ solution that satisfies your ventilation design requirements.

Fan	Fan/Light
FV-0511VK2: 50 to 110 CFM single speed	FV-0511VKL2: 50 to 110 CFM single speed + LED Light
FV-0511VKS2: 30 to 110 CFM pre-installed multi-speed	FV-0511VKSL2: 30 to 110 CFM pre-installed multi-speed + LED Light
FV-1115VK2: 50 to 150 CFM single speed	FV-1115VKL2: 50 to 150 CFM single speed + LED Light

Pick-A-Flow™ Airflow Technology
Pick-A-Flow™ Airflow Selector – one fan, you choose the CFM. Provides the unique ability to select your required airflow (50-80-110 and 110-130-150 CFM models) with the simple flip of a switch.

Step 2: Select Value Added Features

WhisperGreen Select™ offers a unique set of three patented modules that allow you to further customize your fan:

Multi-Speed with Time Delay (FV-VS15VK1) – Allows you to select the proper CFM settings to satisfy ASHRAE 62.2 continuous ventilation requirements. The fan runs continuously at a pre-set lower level, then elevates to a maximum level of operation when the wall switch is turned on, or when the SmartAction® motion sensor or condensation sensor module is activated. A high/low delay timer returns the fan to the pre-set CFM level after a period of time set by the user.

SmartAction® Motion Sensor (FV-MSVK1) – Automatically activates when someone enters the room. Once the settings have been applied, the fan becomes truly automatic, making it ideal for people with disabilities and assisted living environments such as nursing homes and retirement communities. This module also activates an automatic 20-minute delay off timer for the fan.

Condensation Sensor (FV-CSVK1) – Helps control bathroom condensation to prevent mold and mildew. Advanced sensor technology detects relative humidity and temperature to anticipate dew point, automatically turning the fan on to control humidity. Built-in Relative Humidity (RH) sensitivity adjustment enables fine tuning for moist conditions (30% to 80%, in 10% increments) and for satisfying CALGreen requirements. When the condensation sensor is used in conjunction with multi-speed functionality, the fan will kick up to high speed when the condensation sensor detects moisture in the room. This module also activates an automatic 20-minute delay off timer for the fan.

Multi-Speed with Time Delay (FV-VS15VK1) | SmartAction® Motion Sensor (FV-MSVK1) | Condensation Sensor (FV-CSVK1)

Step 3: Install Your Ideal Fan with the New! Flex-Z Fast™ Installation System

Single-hinged articulating joints to easily position bracket in between the joist and/or through ceiling hole. → Easily position bracket in between the joist or ceiling hole. → Extend bracket to desired length.

Ingeniously designed installation bracket provides flexible, fast and easy installation for all your new construction or renovation projects.

Superior Installed Performance up to 0.375" and Certified Quiet Operation at 0.25" Static Pressure

Although ASHRAE, ENERGY STAR®, LEED for Homes, and HVI have set the industry standard for performance measurement at 0.1" and 0.25", WhisperGreen® Select™ fans provide powerful CFM output at 0.375" that is more representative of typical installations. Sones have also been certified at 0.25" to provide a more realistic, installed value, so they are quiet under pressure and after installation.

WhisperGreen® Select™ Connected Ventilation Fans

WhisperGreen® Select™ VENTILATION FAN

HEALTHY AIR, HEALTHY HOME

True Flow ratings at **0.375"** static pressure provide powerful airflow to assure code compliant, healthy homes.

FV-0511VK2 (with Pre-Installed Multi-Speed module)

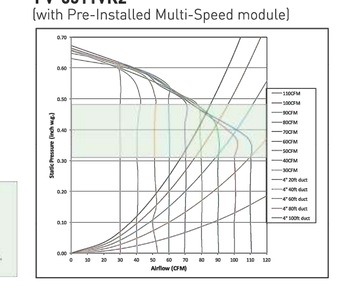

FV-1115VK2 (with Pre-Installed Multi-Speed module)

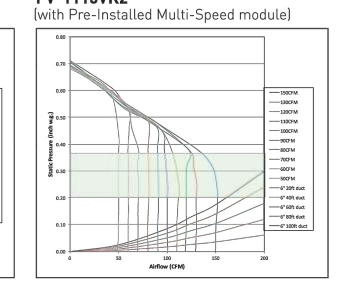

FV-0511VK2

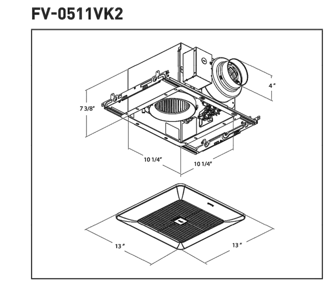

FV-1115VK2

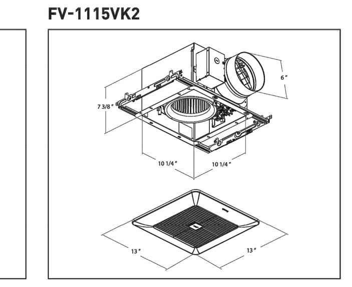

FV-0511VKS2

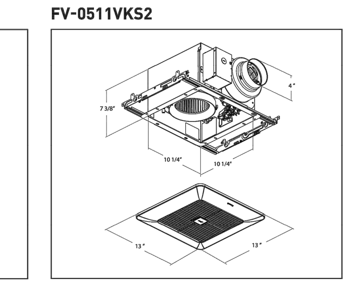

WhisperGreen® Select™ (Fan Only) — Base Fan

Characteristics (HVI tested data for 0.1" S.P.)

Specifications	FV-0511VK2									FV-1115VK2								
Static Pressure in inches w.g.	0.1	0.25	0.375	0.1	0.25	0.375	0.1	0.25	0.375	0.1	0.25	0.375	0.1	0.25	0.375	0.1	0.25	0.375
Air Volume (CFM)	110	110	108	80	80	79	50	51	51	150	151	132	130	130	124	110	112	105
Noise (sones)	<0.3	0.8	-	<0.3	0.5	-	<0.3	0.4	-	<0.3	0.7	-	<0.3	0.4	-	<0.3	0.3	-
Power Consumption (watts)	9.9	15.4	20.0	5.1	9.6	13.4	3.1	6.2	9.6	12.9	22.0	24.4	9.2	16.5	22.1	6.9	12.8	17.9
Energy Efficiency (CFM/Watt)	11.1	7.1	5.4	15.7	8.3	5.9	16.2	8.3	5.3	11.7	6.8	5.4	14.2	7.9	5.6	16.0	8.7	5.8
Speed (RPM)	920	1182	1356	795	1113	1315	722	1054	1266	684	916	1084	645	900	1080	625	894	1083
Amps (Current)	0.10	0.16	0.20	0.06	0.10	0.14	0.04	0.07	0.10	0.14	0.22	0.24	0.10	0.17	0.22	0.08	0.13	0.18

Group	Specifications	FV-0511VK2	FV-1115VK2
Characteristics	MAX. Amps (Current)	0.20	0.24
	Power Rating (V/Hz)	120/60	120/60
Specifications	Motor Type	ECM	ECM
	Type of Motor Bearing	Ball	Ball
	Thermal Fuse Protection	Yes	Yes
	Blower Wheel Type	Sirocco	Sirocco
	ENERGY STAR Qualified	Yes	Yes
Installation	Duct Diameter (Inches)	4 & 6	6
	Mounting Opening (Inches sq.)	10-1/2	10-1/2
	Grille Size (Inches sq.)	13	13
Light Specifications	Lamp Watts	N/A	N/A
	Lumens (lm)	N/A	N/A
	Lumens Per Watt (LPW)	N/A	N/A
	Color Rendering Index	N/A	N/A
	Color Temperature (Kelvin)	N/A	N/A
	Rated Life (hours)	N/A	N/A
	Lamp Model #	N/A	N/A
	Type of Lamp Socket	N/A	N/A
Night Light Specs	Night Light Watts	N/A*	N/A*
Shipping	Gross Weight (lbs)	11.80	11.95
Approved Code/ Standard/ Regulation	UL tub/Shower Enclosure	Yes	Yes
	Washington VIAQ Code	Yes	Yes
	Wall installation	No	No
	California Title 24 Compliant	Yes	Yes
	Mfg in ISO 9001 Certified Facility	Yes	Yes

WhisperGreen® Select™ (Fan Only) — Base Fan with Pre-Installed Multi-Speed — FV-0511VKS2

Specifications																											
Static Pressure in inches w.g.	0.1	0.25	0.375	0.1	0.25	0.375	0.1	0.25	0.375	0.1	0.25	0.375	0.1	0.25	0.375	0.1	0.25	0.375	0.1	0.25	0.375	0.1	0.25	0.375	0.1	0.25	0.375
Air Volume (CFM)	110	110	108	100	101	101	90	90	90	80	80	79	70	71	70	60	60	60	50	51	51	40	41	40	30	30	30
Noise (sones)	<0.3	0.8	-	<0.3	0.7	-	<0.3	0.6	-	<0.3	0.5	-	<0.3	0.5	-	<0.3	0.4	-	<0.3	0.4	-	<0.3	0.3	-	<0.3	0.3	-
Power Consumption (watts)	9.9	15.4	20.0	7.9	13.1	17.8	6.5	11.2	16.0	5.1	9.6	13.4	4.3	8.5	12.1	3.7	6.9	10.5	3.1	6.2	9.6	2.7	5.5	7.8	2.4	4.6	6.8
Energy Efficiency (CFM/Watt)	11.1	7.1	5.4	12.7	7.7	5.7	13.9	8.0	5.6	15.7	8.3	5.9	16.7	8.5	5.9	16.3	8.7	5.7	16.2	8.3	5.3	14.8	7.4	5.1	12.6	6.6	4.4
Speed (RPM)	920	1182	1356	889	1164	1356	839	1135	1351	795	1113	1315	760	1112	1309	751	1061	1287	722	1054	1266	707	1057	1251	711	1039	1259
Amps (Current)	0.10	0.16	0.20	0.09	0.14	0.18	0.07	0.12	0.16	0.06	0.10	0.14	0.05	0.09	0.13	0.05	0.08	0.11	0.04	0.07	0.10	0.04	0.07	0.09	0.04	0.06	0.08

WhisperGreen® Select™ (Fan Only) — Base Fan with Multi-speed Plug 'N Play Module — FV-0511VK2 + FV-VS15VK1

Specifications																											
Static Pressure in inches w.g.	0.1	0.25	0.375	0.1	0.25	0.375	0.1	0.25	0.375	0.1	0.25	0.375	0.1	0.25	0.375	0.1	0.25	0.375	0.1	0.25	0.375	0.1	0.25	0.375	0.1	0.25	0.375
Air Volume (CFM)	110	110	108	100	101	101	90	90	90	80	80	79	70	71	70	60	60	60	50	51	51	40	41	40	30	30	30
Noise (sones)	<0.3	0.8	-	<0.3	0.7	-	<0.3	0.6	-	<0.3	0.5	-	<0.3	0.5	-	<0.3	0.4	-	<0.3	0.4	-	<0.3	0.3	-	<0.3	0.3	-
Power Consumption (watts)	9.9	15.4	20.0	7.9	13.1	17.8	6.5	11.2	16.0	5.1	9.6	13.4	4.3	8.5	12.1	3.7	6.9	10.5	3.1	6.2	9.6	2.7	5.5	7.8	2.4	4.6	6.8
Energy Efficiency (CFM/Watt)	11.1	7.1	5.4	12.7	7.7	5.7	13.9	8.0	5.6	15.7	8.3	5.9	16.7	8.5	5.9	16.3	8.7	5.7	16.2	8.3	5.3	14.8	7.4	5.1	12.6	6.6	4.4
Speed (RPM)	920	1182	1356	889	1164	1356	839	1135	1351	795	1113	1315	760	1112	1309	751	1061	1287	722	1054	1266	707	1057	1251	711	1039	1259
Amps (Current)	0.10	0.16	0.20	0.09	0.14	0.18	0.07	0.12	0.16	0.06	0.10	0.14	0.05	0.09	0.13	0.05	0.08	0.11	0.04	0.07	0.10	0.04	0.07	0.09	0.04	0.06	0.08

Specifications	FV-0511VKS2	FV-0511VK2 + FV-VS15VK1
MAX. Amps (Current)	0.20	0.20
Power Rating (V/Hz)	120/60	120/60
Motor Type	ECM	DC
Type of Motor Bearing	Ball	Ball
Thermal Fuse Protection	Yes	Yes
Blower Wheel Type	Sirocco	Sirocco
ENERGY STAR Qualified	Yes	Yes
Duct Diameter (Inches)	4 & 6	4" or 6"
Mounting Opening (Inches sq.)	10-1/2	10-1/2"
Grille Size (Inches sq.)	13	13"
Lamp Watts	N/A	N/A
Lumens (lm)	N/A	N/A
Lumens Per Watt (LPW)	N/A	N/A
Color Rendering Index	N/A	N/A
Color Temperature (Kelvin)	N/A	N/A
Rated Life (hours)	N/A	N/A
Lamp Model #	N/A	N/A
Type of Lamp Socket	N/A	N/A
Night Light Watts	N/A*	N/A*
Gross Weight (lbs)	11.90	11.9
UL tub/Shower Enclosure	Yes	Yes
Washington VIAQ Code	Yes	Yes
Wall installation	No	No
California Title 24 Compliant	Yes	Yes
Mfg in ISO 9001 Certified Facility	Yes	Yes

*Industry research indicates static pressure in typical installations ranges from 0.20" to 0.375".

ECM Motor with SmartFlow™ Technology
WhisperGreen® Select™ is designed to perform as rated. When the fan senses static pressure, its speed is automatically increased to ensure optimal CFM output. This feature provides peace of mind, as the installer doesn't have to worry about compromising the fan's performance.

LED Lighting
Includes a 10 Watt dimmable LED chip panel/3000 Kelvin Warm White/90CRI/700 lumens/70 LPW/ENERGY STAR® 2.0 certified/JA-8 compliant for CA Title 24/50,000 hours rated average life / <1W LED night light.

BCE COMPANY

CLIENT:

ADDRESS:

CONFIDENTIALITY STATEMENT:

ALL DRAWINGS AND WRITTEN MATERIALS APPEARING HEREIN CONSTITUTE THE ORIGINAL AND UNPUBLISHED WORK OF THE DESIGNER AND THE SAME MAY NOT BE DUPLICATED, USED OR DISCLOSED WITHOUT CONSENT OF THE DESIGNER.

NOTES:
1. ALL DIMENSIONS HEREIN ARE IN IMPERIAL UNITS UNLESS STATED OTHERWISE.
2. THESE DRAWINGS ARE TO BE READ IN CONJUNCTION WITH ALL RELEVANT DESIGNER, ENGINEER OR SPECIALIST DRAWINGS AND SPECIFICATIONS.
3. THE CONTRACTOR MUST CHECK ALL DIMENSION AT SITE BEFORE COMMENCING WORK.
4. THE CONTRACTOR IS RESPONSIBLE FOR PROVIDING ALL NECESSARY TEMPORARY SUPPORT TO THE BUILDING AND ANY ADJACENT STRUCTURES.

REV. NO.	DESCRIPTION	DATE	BY

PROJECT:

TITLE: **MECHANICAL EQUIPMENT DATA SHEETS.**

PROJ. NO.	PROJ. ENGR.	SCALE @ 24X36:
		NTS

DRAWING NO.	REV.
M 4 . 0 1	

GENERAL NOTES

1. MECHANICAL CONTRACTOR SHALL EXAMINE ALL OTHER SPECIFICATIONS, DRAWINGS AND ALL FEATURES OF BUILDING CONSTRUCTION WHICH MAY AFFECT HIS WORK AND SHALL B GOVERNED BY THESE AND OTHER SPECIFICATIONS, INCLUDIN THE GENERAL CONDITIONS AND PARTICULAR INSTRUCTIONS T ALL BIDDER AND SUPPLIERS .
2. ALL WORK SHALL BE EXECUTED AND INSPECTED IN STRICT ACCORDANCE WITH ALL LOCAL CODES AND/OR STATE CODES, LAWS, ORDINANCES, RULES AND REGULATIONS APPLICABLE TO THIS PARTICULAR CLASS OF WORK, AND EACH CONTRACTOR SHALL INCLUDE IN HIS PRICE ALL APPLICABLE SERVICE CHARGES, FEES, PERMITS, TAXES, AND OTHER SIMILAR COSTS IN CONNECTION THEREWITH .
3. PRIOR TO FABRICATION OF DUCTWORK, THE MECHANICAL CONTRACTOR SHALL EXAMINE AND VERIFY ALL CONDITIONS ABOVE AND BELOW THE CEILING WHICH MAY INTERFERE WITH THE DUCT SYSTEM AND NOTIFY THE ARCHITECT OF ANY CONFLICT ENCOUNTERED CONTRACTOR.SHALL PROVIDE ALL OFFSETS, ETC WHICH MAY BE REQUIRED, WITHOUT ADDITIONAL COST TO THE OWNER
4. ALL SHEET METAL DUCT CONSTRUCTION SHALL BE IN STRICT ACCORDANCE WITH "SMACNA" LOW PRESSURE DUCT CONSTRUCTION STANDARD
5. TURNING VANES SHALL BE INSTALLED IN ALL BENDS IN RECTANGULAR DUCT EXCEEDING 30"
6. ALL DUCTS SHALL BE SUPPORTED WITH 1"WIDE, 16 GAUGE, GALVANIZED STEEL BANDS .
7. ALL RECTANGULAR DUCT SHALL BE INSULATED WITH A MIN OF 1"INTERNAL LINER, 2 LBS DENSITY R-60 ALL ROUND DUCTS AND DIFFUSER TOPS SHALL HAVE A MIN 2" THICK OF FOIL BACKED BLANKET TYPE INSULATION R=4-4 2, WITH ALL JOINTS BUTTED AND TAPED .
8. ALL DUCT DIMENSIONS SHOWN ON PLANS ARE INTERNAL
9. THE MECHANICAL CONTRACTOR SHALL COORDINATE THE LOCATION OF SUPPLY AND RETURN AIR REGISTERS, DUCTS, GRILLES AND DIFFUSERS WITH LIGHTING AND CEILING PATTERNS
10. PROVIDE LATERAL BRACING OF ALL DUCTS AND PIPES AS REQUIRED BY CODE .
11. INSULATE AND SEAL ALL DUCTWORK PER CHAPTER 10 OF THE STATE MECHANICAL CODE (T-24, PART 4)
12. MOUNT ALL THERMOSTATS AT 48" ABOVE FINISHED FLOOR .
13. ALL BRACING OF DUCTS AND PIPING SHALL BE INSTALLED IN ACCORDANCE WITH SMACNA GUIDELINES
14. WHERE BRACING DETAILS ARE NOT SHOWN ON THE DRAWINGS OR IN THE GUIDELINES, THE FIELD INSTALLATION SHALL BE SUBJECT TO THE APPROVAL OF THE ARCHITECT AND THE MECHANICAL ENGINEER .
15. DUCT SMOKE DETECTOR SHALL BE INSTALLED BELOW THE ROOF
16. ALL MECHANICAL EQUIPMENT AND SYSTEMS INSTALLED AS PART OF PROJECT SHALL COMPLY WITH ALL REQUIREMENTS OF THE 2022 CALIFORNIA MECHANICAL CODE AND THE 2022 CALIFORNIA BUILDING CODE AND THE 2022 CALIFORNIA BUILDING ENERGY EFFICIENCY STANDARDS
17. OUTSIDE AIR FOR A HEATING OR COOLING SYSTEM SHALL NOT BE TAKEN FROM CLOSER THAN 10 FEET FROM AN APPLIANCE VENT OUTLET, VENT OPENING OF A PLUMBING SYSTEM, OR THE DISCHARGE OUTLET OF EXHAUST FAN, UNLESS THE OUTLET IS 3 FT ABOVE THE OUTSIDE AIR INLET (CMC 314 3)
18. PROVIDE 120 VOLT ELECTRICAL OUTLETS WITHIN 25 FT OF ALL MECH. EQUIPT. (CMC 309)
19. HEATING,VENTILATING,ANDAIR CONDITIONING SYSTEMS SHALL BE BALANCED IN ACCORDANCE WITH ONE OF THE FOLLOWING METHODS IN ACCORDANCE WITH CMC 317 1 REQUIREMENTS
    A. AABC NATIONAL STANDARDS FOR TOTAL SYSTEM BALANCE
    B. ACCA MANUAL B
    C. ASHRAE 111
    D. NEBB PROCEDURAL STANDARDS FOR TESTING,ADJUSTING ADJUSTING BALANCING OF ENVIRONMENTAL SYSTEMS
    E. SMACNA HVAC TESTING,ADJUSTING,AND BALANCING
20. MATERIALS EXPOSED WITHIN DUCTS OR PLENUMS SHALL BE NON COMBUSTIBLE OR SHALL HAVE A FLAME SPREAD INDEX NOT TO EXCEED 25 AND A SMOKE DEVELOPED INDEX NOT TO EXCEED 50 WHERE TESTED AS A COMPOSITE PRODUCT IN ACCORDANCE WITH ASTM E84 OR UL 723 .

DUCTWORK SYMBOLS LEGEND

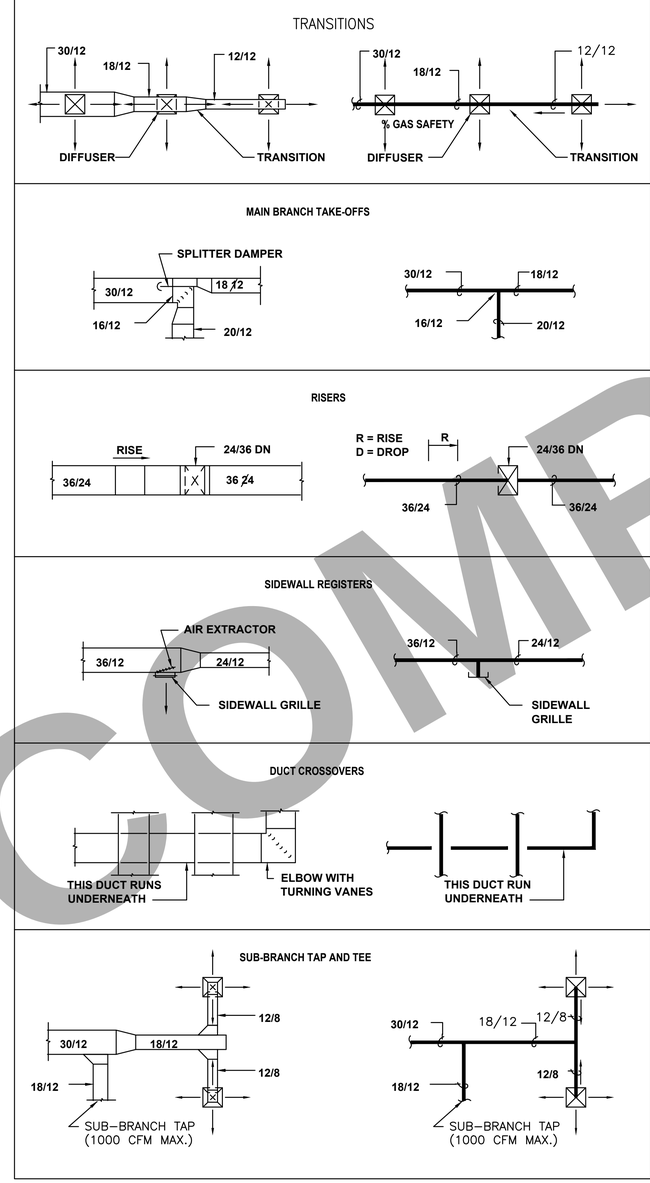

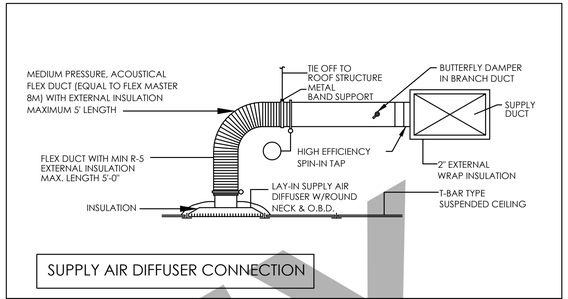

SUPPLY AIR DIFFUSER CONNECTION

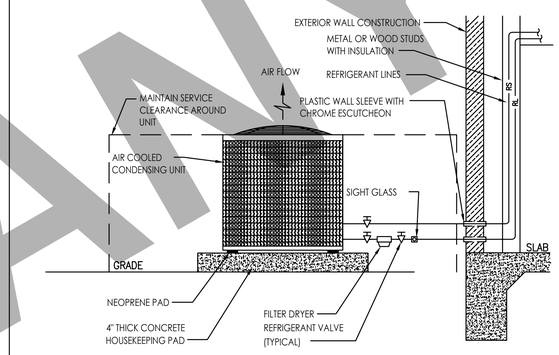

OUTSIDE AIR CONDITIONER

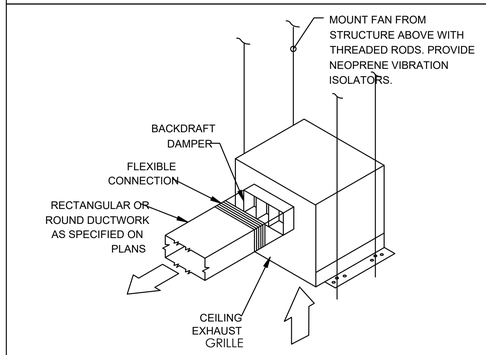

CEILING EXHAUST FAN DETAIL

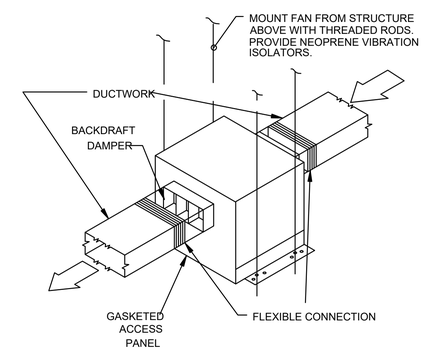

IN-LINE FAN DETAIL

CLIENT:

ADDRESS:

CONFIDENTIALITY STATEMENT:

ALL DRAWINGS AND WRITTEN MATERIALS APPEARING HEREIN CONSTITUTE THE ORIGINAL AND UNPUBLISHED WORK OF THE DESIGNER AND THE SAME MAY NOT BE DUPLICATED, USED OR DISCLOSED WITHOUT CONSENT OF THE DESIGNER.

NOTES:

1. ALL DIMENSIONS HEREIN ARE IN IMPERIAL UNITS UNLESS STATED OTHERWISE.
2. THESE DRAWINGS ARE TO BE READ IN CONJUNCTION WITH ALL RELEVANT DESIGNER, ENGINEER OR SPECIALIST DRAWINGS AND SPECIFICATIONS.
3. THE CONTRACTOR MUST CHECK ALL DIMENSION AT SITE BEFORE COMMENCING WORK.
4. THE CONTRACTOR IS RESPONSIBLE FOR PROVIDING ALL NECESSARY TEMPORARY SUPPORT TO THE BUILDING AND ANY ADJACENT STRUCTURES.

REV. NO	DESCRIPTION	DATE	BY

PROJECT:

TITLE: **MECHANICAL GENERAL DETAILS.**

PROJ. NO.	PROJ. ENGR.	SCALE @ 24X36:
		NTS

DRAWING NO. **M 5 . 0 1**

REV.

BCE COMPANY

PLUMBING SPECIFICATIONS

THE WORK INCLUDES MODIFICATION TO THE EXISTING PLUMBING SYSTEM AND PROVIDING NEW MATERIALS, FITTINGS AND ACCESSORIES NECESSARY FOR A COMPLETE FUNCTIONING PLUMBING SYSTEM. THE WORK ALSO INCLUDES ROUGH-IN AND FINAL CONNECTIONS TO FOOD SERVICE EQUIPMENT AND BEVERAGE DISPENSING EQUIPMENT PROVIDED BY OTHERS. ALL WORK SHALL BE IN ACCORDANCE WITH LOCAL CODES AND/OR ORDINANCES AND IS SUBJECT TO INSPECTION. HOOK-UP CHARGES, PERMITS AND ALL OTHER EXPENSES RELATED TO A COMPLETE AND FUNCTIONING PLUMBING SYSTEM ARE INCLUDED AS A PART OF THIS SECTION. WARRANTY: PROVIDE LABOR AND MATERIALS TO REPAIR OR REPLACE DEFECTIVE PARTS AND MATERIALS AS REQUIRED FOR ONE YEAR AFTER SUBSTANTIAL COMPLETION OR OWNER ACCEPTANCE OF THE COMPLETED PROJECT. PROVIDE A SEPARATE LINE ITEM DEDUCT AMOUNT ON THE PROPOSAL FORM TO DELETE WARRANTY SERVICE, AT THE OWNER'S OPTION. THE INTENT OF THE DRAWINGS IS TO INDICATE THE GENERAL EXTENT OF WORK REQUIRED FOR THE PROJECT. THE DRAWINGS FOR PLUMBING WORK ARE DIAGRAMMATIC, SHOWING THE GENERAL LOCATION, TYPE, FIXTURES AND EQUIPMENT REQUIRED. THE DRAWINGS SHALL NOT BE SCALED FOR EXACT MEASUREMENTS. REFER TO MANUFACTURER'S STANDARD ROUGH-IN DRAWINGS FOR PLUMBING FIXTURE INSTALLATION REQUIREMENTS. COMPLY WITH ALL APPLICABLE ADA INSTALLATION REQUIREMENTS. COORDINATE WITH THE WORK OF OTHER SECTIONS, EQUIPMENT FURNISHED BY OTHERS, AND WITH THE CONSTRAINTS OF THE EXISTING CONDITIONS OF THE PROJECT SITE. PIPING SYSTEMS - GENERAL: ALL PIPING SHALL BE RUN PARALLEL TO BUILDING LINES AND SUPPORTED AND ANCHORED AS REQUIRED TO FACILITATE EXPANSION AND CONTRACTION. ALL PIPING SHALL BE CONCEALED EXCEPT IN UNFINISHED SPACES. INSTALL AS REQUIRED TO MEET ALL CONSTRUCTION CONDITIONS AND TO ALLOW FOR INSTALLATION OF OTHER WORK SUCH AS DUCTS AND ELECTRICAL CONDUIT. AT ALL CONNECTIONS BETWEEN FERROUS PIPING AND NONFERROUS PIPING, PROVIDE AN ISOLATING DIALECTIC UNION. ALL HANGERS SHALL BE COMPATIBLE WITH PIPING MATERIAL TO PREVENT CORROSION. PROVIDE ALL FITTINGS, ACCESSORIES, OFFSETS, AND MATERIALS NECESSARY TO FACILITATE THE PLUMBING SYSTEM'S FUNCTIONING AS INDICATED BY THE DESIGN AND THE EQUIPMENT INDICATED. FIXTURES/EQUIPMENT FURNISHED BY OTHERS: PLUMBING CONTRACTOR SHALL PROVIDE UTILITY CONNECTIONS REQUIRED SUCH AS WATER, GAS, AIR, SUPPLIES, WASTE OUTLET, TRAPS, ETC. AT ALL PLUMBING TYPE FIXTURES OR EQUIPMENT FURNISHED BY OWNER, GENERAL CONTRACTOR, FOOD SERVICE CONTRACTOR, EQUIPMENT SUPPLIER, ETC. INCLUDED ARE STOP VALVES, ESCUTCHEONS, AND CHROME PLATED BRASS TUBING WITH COMPRESSION FITTINGS. SEWER AND WASTE PIPING: PROVIDE ALL DRAINS AND SEWERS WITHIN THE SPACE WITH CONNECTION TO THE EXISTING DRAINAGE SYSTEMS ON-SITE. SANITARY DRAINAGE PIPING ABOVE FLOOR SHALL BE CO-EXTRUDED PVC DWV (SCHEDULE 40) PIPE, FITTINGS AND CONNECTIONS. SANITARY DRAINAGE PIPING BELOW GRADE SHALL BE CO-EXTRUDED PVC DWV (SCHEDULE 40) PIPE WITH SOLVENT WELD FITTINGS MAY BE USED (WHERE PERMITTED BY CODE/LOCAL AUTHORITIES). ALL DRAINAGE PIPING SHALL BE UNIFORMLY PITCHED, 1/4" PER FOOT UNLESS OTHERWISE REQUIRED BY EXISTING CONDITIONS, OR INDICATED ON THE DRAWINGS. VENTS: PROVIDE A COMPLETE SYSTEM OF STANDARD WEIGHT CAST IRON NO-HUB VENT RISERS WHERE THE CEILING SPACE IS USED AS A RETURN AIR PLENUM OR USE CO-EXTRUDED PVC DWV (SCHEDULE 40) PIPE (WHERE PERMITTED BY CODE/LOCAL AUTHORITIES) WHERE THERE IS A DUCTED RETURN AIR SYSTEM. DO NOT USE PVC PIPE IN RETURN AIR PLENUM SPACES. THE VENT SYSTEM SHALL BE CARRIED THROUGH THE ROOF WITH APPROPRIATE FLASHING. CONDENSATE AND INDIRECT DRAIN PIPING:PIPING ABOVE FLOOR SHALL BE CO-EXTRUDED PVC DWV (SCHEDULE 40) PIPE, FITTINGS AND CONNECTIONS. PIPING BELOW GRADE SHALL BE CO-EXTRUDED PVC DWV(SCHEDULE 40) PIPE WITH SOLVENT WELD FITTINGS. CLEANOUTS: PROVIDE CLEANOUTS AT THE END OF EACH HORIZONTAL RUN, AND AT THE BASE OF ALL VERTICAL WASTE AND DRAIN PIPES. CLEANOUTS SHALL BE OF THE SAME SIZE AS THE PIPES THEY SERVE, CONFORMING TO CODE REQUIREMENTS. PROVIDE SUITABLE WALL OR FLOOR CLEANOUTS WITH ACCESSORIES TO OBSCURE FROM VIEW. WATER DISTRIBUTION PIPING: LAYOUT WATER PIPING SO THAT THE ENTIRE SYSTEM CAN BE DRAINED. HOT AND COLD WATER PIPING SHALL BE 1/2" MIN. CPVC PIPE WITH SOLVENT FITTING. PROVIDE WATER HAMMER ARRESTERS AT EACH FIXTURE OR GROUP OF FIXTURES AS REQUIRED. INSTALL CHROME PLATED BRASS ESCUTCHEON PLATES AT ALL PENETRATIONS THROUGH FINISHED SURFACES (INCLUDING CABINET INTERIORS). PIPE INSULATION: INSULATE (AS ALLOWED BY CODE) ALL LISTED SERVICE PIPING AS FOLLOWS. DOMESTIC COLD/HOT WATER, HOT WATER RETURN, STORM WATER PIPING. PROVIDE 1" PREFORMED FIBERGLASS, ASJ/SS-11, FLAME SPREAD 25, SMOKE DEVELOPED 50, ASTM C-547. FOR CONDENSATE PIPING PROVIDE 1/2" THICK INSULATION OF SAME CHARACTERISTICS AS LISTED FOR 1" ABOVE. WHERE PERMITTED BY LOCAL CODES, PROVIDE 1/2" SELF-ADHESIVE UNICELLULAR FOAM PIPE INSULATION WITH PRE-FORMED PVC FITTING COVERS - EQUAL TO SELF-ADHESIVE ARMSTRONG 2000 WITH K FACTOR OF 0.27 AT 75 DEGREES MEAN TEMPERATURE. INSULATE ANY EXPOSED CONDENSATE PIPING WITH WASTE TEMPERATURE BELOW 60 DEGREES F. SHUTOFF VALVES, WITH UNIONS SHALL BE PROVIDED FOR SERVICE TO EACH PLUMBING FIXTURE, FOOD SERVICE EQUIPMENT ITEM OR OTHER EQUIPMENT ITEM, TO FACILITATE ISOLATION FOR REPAIR OR REPLACEMENT. VALVES SHALL BE EQUAL TO JENKINS #902-T BALL VALVE, CHROME-FINISHED BRONZE, TEFLON SEATS AND PACKING, 400 LB. W.O.G., SOLDER END. ACCESS PANELS SHALL BE PROVIDED WHERE CONCEALED CONTROL DEVICES, VALVES, ETC. ARE CONCEALED WITHIN WALLS. WHERE ACCESS FOR ADJUSTMENT AND MAINTENANCE IS POSSIBLE THROUGH LAY-IN SUSPENDED CEILINGS, ACCESS PANELS ARE NOT REQUIRED. PIPING SYSTEM- PVC SCHEDULE 40, SCHEDULE 80 AND CPVC PIPE WITH SOLVENT FITTINGS SHALL BE USED WHERE PEMITTED BY CODE/LOCAL AUTHORITIES. INSTALLATION: THOROUGHLY CLEAN ITEMS BEFORE INSTALLATION. CAP PIPE OPENINGS TO EXCLUDE DIRT UNTIL FIXTURES ARE INSTALLED AND FINAL CONNECTIONS HAVE BEEN MADE. PROCEED AS RAPIDLY AS CONSTRUCTION WILL PERMIT. SET FIXTURES LEVEL AND IN PROPER ALIGNMENT. INSTALL SUPPLIES IN PROPER ALIGNMENT WITH FIXTURES. INSTALL SILICONE SEALANT BETWEEN FIXTURES AND ADJACENT MATERIAL, FOR SANITARY JOINT, AND OMIT ESCUTCHEONS. REPAIR EXISTING PLUMBING SYSTEM COMPONENTS DAMAGED BY CONSTRUCTION OPERATIONS AND RESTORE TO ORIGINAL CONDITIONS. TEST WATER SYSTEM UNDER 150 PSIG HYDROSTATIC PRESSURE, FOR FOUR (4) HOURS MINIMUM. WHEN TESTING INDICATES MATERIALS OR WORKMANSHIP IS DEFICIENT, REPLACE OR REPAIR AS REQUIRED, AND REPEAT TEST UNTIL STANDARDS ARE ACHIEVED. ROOF PENETRATIONS SHALL COMPLY WITH "SMACNA" AND "NRCA" STANDARDS, AND WITH THE REQUIREMENTS OF THE EXISTING ROOFING WARRANTY, IF APPLICABLE. DO NOT PERFORM ROOFING PENETRATIONS IN A MANNER WHICH WOULD VOID OR OTHERWISE LIMIT THE EXISTING ROOFING WARRANTY.

GENERAL NOTES

1. THE INTENT OF THESE PLANS AND SPECIFICATIONS IS TO INCLUDE ALL LABOR, EQUIPMENT, MATERIALS, AND SERVICES NECESSARY TO FURNISH, INSTALL, TEST, AND ADJUST A COMPLETE WORKABLE PLUMBING INSTALLATION AS SHOWN, PRESCRIBED, OR REASONABLY IMPLIED BUT NOT LIMITED TO THAT EXPLICITLY INDICATED IN THE CONTRACT DOCUMENTS, BUT NECESSARY FOR THE PROPER EXECUTION AND COMPLETION OF THE INTENT THEREOF.
2. THE ENTIRE INSTALLATION SHALL CONFORM TO THE REQUIREMENTS OF THE 2022 CALIFORNIA PLUMBING CODE, 2022 CALIFORNIA BUILDING CODE, 2022 CALIFORNIA ENERGY CONSERVATION CODE AND ALL OTHER APPLICABLE CODES AND REGULATIONS REQUIRED BY AUTHORITIES HAVING JURISDICTION. IN THE EVENT OF CONFLICT BETWEEN SPECIFICATIONS, CODES, AND REGULATIONS, THE MORE RESTRICTIVE SHALL APPLY.
3. COORDINATE ENTIRE INSTALLATION OF THE PLUMBING SYSTEM WITH THE WORK OF OTHER TRADES PRIOR TO ANY FABRICATION OR INSTALLATION. FIELD VERIFY ALL DIMENSIONS AND CONDITIONS. REPORT ANY DISCREPANCIES, IN WRITING, TO THE ENGINEER PRIOR TO COMMENCEMENT OF WORK.
4. CONTRACTOR SHALL PROVIDE AS-BUILT DRAWINGS WITH ALL CHANGES NOTED THEREON AT THE COMPLETION OF THE PROJECT IN ACCORDANCE WITH THE SPECIFICATIONS. PROVIDE ONE YEAR WARRANTY ON ALL PARTS AND LABOR.
6. THE DRAWINGS ARE DIAGRAMMATIC AND INTENDED TO SHOW SCOPE. CONTRACTOR SHALL COORDINATE HIS WORK WITH OTHER TRADES TO PROVIDE THE BEST ARRANGEMENT OF ALL DUCT, PIPE, CONDUIT, ETC.
7. ALL CUTTING AND PATCHING OF THE EXISTING STRUCTURE SHALL BE PROVIDED UNDER OTHER SECTIONS OF THE WORK. PROVIDE NECESSARY REQUIREMENTS TO THE PROJECT SUPERINTENDENT.
8. ALL HOT WATER PIPING AND RE-CIRCULATION PIPING (EXCEPT RUNOUTS 12 FT. OR SHORTER TO INDIVIDUAL FIXTURES) SHALL BE INSULATED TO MEET THE REQUIREMENTS OF THE 2022 CALIFORNIA ENERGY CONSERVATION CODE
9. CONDENSATE DRAINS SHALL BE PROVIDED FOR EACH AIR CONDITIONING UNIT. HORIZONTAL CONDENSATE DRAINS ABOVE ANY CEILING SHALL BE INSULATED WITH MIN. 3/8" THICK CLOSED CELL INSULATION.
10. PIPING:

A. WASTE, VENT, AND STORM DRAIN PIPING SHALL BE CO-EXTRUDED PVC SCHEDULE 40) PIPE
B. WATER PIPE SHALL BE CPVC PIPE
C. CONDENSATE PIPING SHALL BE CO-EXTRUDED PVC (SCHEDULE 40) PIPE
D. INSIDE GAS PIPING SHALL BE BLACK IRON SCHEDULE 40 WITH MALLEABLE IRON FITTINGS. OUTSIDE SHALL BE GALVANIZED IRON SCHEDULE 40 WITH GALVANIZED FITTINGS. GAS LINE TO BE PAINTED GRAY IN COLOR. A 24 HOUR METERED GAS TEST SHALL BE REQUIRED.
E. ALL PIPING NOT ENCLOSED IN CONDITION SPACE OR AT EXTERIOR WALLS SHALL BE INSULATED.
F. PIPING: PVC SCHEDULE 40, SCHEDULE 80 AND CPVC PIPING WITH SOLVENT WELD FITTINGS SHALL BE USED WHERE PERMITTED BY CODE/LOCAL AUTHORITIES

11. ALL VENTS OR EXHAUSTS SHALL BE AT LEAST 10 FT. AWAY OR 3 FT. ABOVE ANY WINDOW, DOOR, OPENING, OR AIR INTAKE.
12. CLEANOUTS SHALL BE INSTALLED PER THE CALIFORNIA PLUMBING CODE.
13. PROVIDE WATER TIGHT FLASHINGS WHEREVER PIPES PASS THROUGH EXTERIOR WALLS, ROOFS, OR FLOORS.
14. PROVIDE ISOLATION FOR ALL PIPES THAT COME IN CONTACT WITH THE STRUCTURE.
15. LOCATION OF EXISTING UTILITIES AND POINTS OF CONNECTION ARE APPROXIMATE. CONTRACTOR SHALL VERIFY EXACT LOCATIONS AND DEPTHS OF EXISTING UTILITIES AND SERVICES PRIOR TO STARTING WORK OF THIS SECTION. IF INDICATED POINTS OF CONNECTION CANNOT BE MADE TO EXISTING UTILITIES AS FOUND, THE CONTRACTOR SHALL NOTIFY THE ENGINEER PRIOR TO INSTALLING ANY WORK WHICH MAY BE AFFECTED.
16. VALVES SHALL BE NIBCO, JENKINS, HAMMOND, RED & WHITE OR APPROVED EQUAL. SERVICE PRESSURE SHALL BE SUITABLE FOR SERVICE INTENDED. THE MAIN WATER SHUT OF VALVE SHALL BE A FULL PORT BALL TYPE AND APPROVED FOR SERVICE INTENDED.
17. CONTRACTOR SHALL PROVIDE ALL SHUT OFF VALVES AS NECESSARY TO ISOLATE ANY EQUIPMENT, PLUMBING ITEMS, OR FIXTURES, THAT MAY NEED SERVICING OR ARE SUBJECT TO FAILURE WHETHER OR NOT SUCH VALVES ARE SHOWN ON THE DRAWINGS.
18. PROVIDE HANGERS AND SUPPORTS AS REQUIRED. PLUMBERS TAPE AND WIRE ARE NOT ACCEPTABLE.
19. CONTRACTOR IS RESPONSIBLE FOR HIS OWN TRENCHING, BACKFILL, AND COMPACTION OF TRENCHES NECESSARY TO COMPLETE HIS SCOPE OF WORK. BACKFILLED TRENCHES SHALL BE RETURNED TO THEIR ORIGINAL GRADE UNLESS NOTED OTHERWISE.
20. CONTRACTOR SHALL AFFIX A MAINTENANCE LABEL TO ALL EQUIPMENT REQUIRING ROUTINE MAINTENANCE AND SHALL PROVIDE MAINTENANCE AND OPERATIONAL MANUALS IN ACCORDANCE WITH THE SPECIFICATIONS.
21. ALL EQUIPMENT THAT REQUIRES KEYS OR SPECIAL TOOLS TO OPERATE SHALL SUPPLY THE OWNER WITH TWO OF ANY SUCH KEYS OR TOOLS FOR EACH PIECE OF EQUIPMENT THAT REQUIRE THE SAME.
25. ANY CHANGE OR DEVIATION FROM THESE PLANS OR SPECIFICATIONS SHALL REQUIRE THE APPROVAL, IN WRITING, OF THE ENGINEER PRIOR TO COMMENCEMENT OF SUCH WORK.
26. ALL PLUMBING, ELECTRICAL, AND GAS LINES SHALL BE CONCEALED WITHIN THE THE BUILDING STRUCTURE TO AS GREAT EXTENT AS POSSIBLE. ALL LINES NOT CONCEALED SHALL BE SECURED 6" OFF THE FLOOR AND 3/4" FROM THE WALLS USING STANDOFF BRACKETS
27. AN APPROVED BACKFLOW PREVENTOR SHALL BE PROPERLY INSTALLED UPSTREAM OF ANY POTENTIAL HAZARD BETWEEN THE POTABLE WATER SUPPLY AND SOURCE OF COMTAMINATION.
28. WATER SUPPLY CARBONATORS SHALL BE PROTECTED BY AN APPROVED REDUCED PRESSURE PRINCIPLE BACKFLOW PREVENTOR. THE RELIEF VALVE SHALL DRAIN IN-DIRECTLY TO A FLOOR SINK WITH A 1" MIN. AIR GAP.

PLUMBING LEGEND

SYMBOL	ABBRV.	DESCRIPTION
	SS or W	NEW SEWER OR WASTE
	V	NEW VENT
	CW	NEW COLD WATER
	HW	NEW HOT WATER
	G	NEW GAS
	CD	NEW CONDENSATE DRAIN
CA	CA	COMPRESSED AIR
	FCO	FLOOR CLEANOUT
	WCO	WALL CLEANOUT
	FD	FLOOR DRAIN
	FS	FLOOR SINK
	TP	TRAP PRIMER & TRAP PRIMER PIPING
	SOV	SHUT-OFF VALVE
	CV	CHECK VALVE
	PRV	BACKFLOW PREVENTER W SOV'S
	T & P	
	DN	PIPE DOWN
	UP	PIPE UP
	POC	POINT OF CONNECTION
7	-	PLUMBING NOTE CALL-OUT
	ABV	ABOVE
	AFF	ABOVE FINISH FLOOR
	AP	ACCESS PANEL
	BEL	BELOW
	BLDG	BUILDING
	CLG	CEILING
	CONT	CONTINUATION
	EL	ELEVATION
	FIN	FINISH
	FL	FLOOR
	GR	GRADE
	NTS	NOT TO SCALE
	OC	ON CENTER
	S= %	SLOPE AT A PERCENTAGE
	SHT	SHEET
	TYP	TYPICAL
	VTR	VENT THRU ROOF

PLUMBING / GENERAL NOTES

BATHTUBS AND WHIRLPOOL BATHTUBS. THE MAX. HOT WATER TEMPERATURE DISCHARGING SHALL BE LIMITED TO 120 DEGREES.

BATHTUBS WASTE OPENING IN FLOOR OVER CRAWL SPACES SHALL BE PROTECTED BY A METAL SCREEN NOT EXCEEDING 12" OR SOLID COVER.

SHOWERS AND TUB-SHOWERS COMBINATIONS IN ALL BUILDINGS SHALL BE PROVIDED WITH INDIVIDUAL CONTROL VALVES OF THE PRESSURE BALANCE, THERMOSTATIC, OR COMBINATION OF BOTH THAT PROVIDE SCALD AND THERMAL SHOCK PROTECTION. VALVES SHALL BE ADJUSTED TO DELIVER A MAXIMUM MIXED WATER
SETTING OF 120 DEGREES FAHRENHEIT. THE WATER HEATER THERMOSTAT SHALL NOT BE CONSIDERED A SUITABLE CONTROL FOR MEETING THIS PROVISION.
VERIFY AND WHERE WATER PRESSURE EXCEEDS 80 PSI AN APPROVED PRESSURE REGULATOR PRECEDED BY AN ADEQUATE STRAINER SHALL BE INSTALLED
1-INSTALL TEMPERATURE AND PRESSURE RELIEF VALVE WITH MINIMUM 34" DRAIN PIPE AND TERMINATE TO THE EXTERIOR OF THE BUILDING OVER WINDOW, DOOR OR VISIBLE LOCATION. DISCHARGE FROM A RELIEF VALVE INTO A WATER HEATER PAN SHALL BE PROHIBITED
.
2-PROVIDE (ON THE PLANS) A GAS PIPING DIAGRAM OF THE GAS PIPING SYSTEM THAT INCLUDES ALL PIPE SIZES, PIPE LENGTHS AND BTU RATINGS.

3-SUBMIT GAS LOAD CALCULATIONS IN ACCORDANCE WITH CPC TABLE 12-8 TO VERIFY THE PIPE SIZES ARE ADEQUATE FOR THE MAXIMUM DELIVERY CAPACITY OF CUBIC FEET OF GAS PER HOUR.
4- A WHOLE HOUSE HAS TEST IS REQUIRED UPON COMPLETION OF THE INSTALLATION, ALTERATION, OR REPAIR OF ANY GAS PIPING.
THE CITY SHALL BE NOTIFIED WHEN GAS PIPING IS READY FOR INSPECTION.
5- 2 GPM SHOWER FIXTURE, MAX.1.5 GPM BATHROOM FAUCET, MAX. 2 GPM KITCHEN FAUCET, AND MAX 1.28 WATER CLOSET TO CONFORM TO CITY GREEN REQUIREMENTS.
BATHROOMS: PROVIDE AN EXHAUST FAN (AT LEAST 50 CFM) DUCTED TO THE OUTSIDE (MINIMUM 4" DIAMETER FLEX DUCT WITH A MAXIMUM LENGTH OF 70")WITH A MINIMUM VENTILATION RATE OF 100 CFM, IDENTIFY THE REQUIREMENT FOR A BACKDRAFT DAMPER ON THE DUCT, AN ENERGY STAR COMPLIANT EXHAUST FAN THAT IS CONTROLLED BY A HUMIDITY SENSOR THAT IS CAPABLE OF BEING ADJUSTED BETWEEN ≤ 50-PERCENT TO 80-PERCENT HUMIDITY; AND A SEPARATE SWITCH FROM THE LIGHT UNLESS THE FAN IS ALLOWED TO OPERATE WITH THE LIGHT SWITCHED OFF.

6-NOTE THAT ALL PLUMBING VENTS SHALL TERMINATE NOT LESS THAN 6" ABOVE ROOF NOR LESS THAN 1' FROM ANY VERTICAL SURFACE. VENTS SHALL TERMINATE NOT LESS THAN 10" FROM OR 3' ABOVE ANY WINDOW, DOOR OPENING AIR INTAKE, OR VENT SHAFT NOR 3' FROM LOT LINE.
IF WATER PRESSURE EXCEEDS 80 PSI, AND EXPANSION TANK AND AN APPROVED PRESSURE REGULATOR SHALL BE INSTALLED.
NON-REMOVABLE BACK FLOW PRE-VENTER OR BIBB-TYPE VACUUM BREAKER WILL BE INSTALLED ON ALL EXTERIOR HOSE BIBS. HOT WATER RE-CIRCULATING SYSTEM IS INSTALLED, THE ENTIRE LENGTH OF HOT WATER PIPES SHALL BE INSULATED.

NOTES:
1-Projects which disturb less than one acre of soil shall manage storm water drainage during construction by one of the following: A. Retention basins. B. Where storm water is conveyed to a public drainage system, water shall be filtered by use of a barrier system, wattle or other approved method.
2-Site grading or drainage system will manage all surface water flows to keep water from entering buildings (swales, water collection, French drains, etc.). CGC Section 4.106.3. Exception: Additions not altering the drainage path.
3-When a shower is provided with multiple shower heads, the sum of flow to all the heads shall not exceed 1.8 gpm @ 80 psi, or the shower shall be designed so that only one head is on at a time. CGC Section 4.303.1.3.2.
4-Landscape irrigation water use shall have weather or soil based controllers. CGC Section 4.304.1.
5-The plans that a minimum of 65% of construction waste is to be recycled. CGC Section 4.408.1.
6-The contractor shall submit a Construction Waste Management Plan, per CGC Section 4.408.2.
7-The builder is to provide an operation manual (containing information for maintaining appliances, etc.) for the owner at the time of final inspection. CGC Section 4.410.1.
8-The gas fireplace(s) shall be a direct-vent sealed- combustion type. Woodstove or pellet stoves must be US EPA Phase II rated appliances. CGC Section 4.503.1.

WATER SAVING STANDARDS.

THE WATER SAVING PERFORMANCE STANDARDS FOR A PLUMBING FIXTURE ARE THOSE ESTABLISHED BY THE AMERICAN NATIONAL STANDARDS INSTITUTE (ANSI), CURRENT REVISION, OR THE FOLLOWING STANDARDS, WHICHEVER ARE THE MORE RESTRICTIVE
1-THE MAXIMUM FLOW FROM A SINK OR LAVATORY FAUCET OR A FAUCET AERATOR SHALL NOT EXCEED 0.5 GALLONS OF WATER PER MINUTE AT A PRESSURE OF 60 POUNDS PER SQUARE INCH WHEN TESTED IN ACCORDANCE WITH ANSI TESTING PROCEDURES. 2- THE MAXIMUM VOLUME OF WATER PER FLUSH FROM A TOILET SHALL NOT EXCEED AN AVERAGE OF 1 28 GALLONS WHEN TESTED IN ACCORDANCE WITH ANSI TESTING PROCEDURES
3- THE MAXIMUM VOLUME OF WATER PER FLUSH FROM A URINAL AND THE ASSOCIATED FLUSH VALVE, IF ANY, SHALL NOT EXCEED AN AVERAGE OF ONE GALLON WHEN TESTED IN ACCORDANCE WITH ANSI TESTING PROCEDURES

SPECIAL NOTICE TO CONTRACTORS

1. ALL CONTRACTORS (GENERAL CONTRACTOR AND SUB-CONTRACTORS) BIDDING THIS PROJECT ARE REQUIRED TO VISIT THE JOB SITE AND VERIFY THE EXISTING CONDITIONS PRIOR TO SUBMITTING THEIR BID. CONTRACTORS ARE TO CAREFULLY REVIEW ALL CONSTRUCTION DOCUMENTS AND NOTE ANY DISCREPANCIES BETWEEN THE CONSTRUCTION DOCUMENTS AND THE CONDITIONS OBSERVED AT THE JOB SITE PRIOR TO SUBMISSION OF ANY BID. THE BUILDING OWNER REPRESENTATIVE LISTED BELOW MAY BE CONTACTED FOR ACCESS TO THE JOB SITE.
2. CONTRACTORS ARE RESPONSIBLE FOR VERIFYING THE LOCATION AND CONDITION OF ALL POINTS OF CONNECTION, LOCATION AND CONDITION OF ALL BUILDING (ROOF/FLOOR/CEILING) PENETRATIONS, LOCATION AND CONDITION OF ALL UTILITIES AND BUILDING SYSTEMS INCLUDING, BUT NOT LIMITED TO, GAS, WATER, SEWER, VENT, ELECTRICAL, BUILDING MECHANICAL SYSTEMS, DUCT CONNECTIONS, EXHAUST/OUTSIDE AIR CONNECTIONS, SECURITY, FIRE ALARM, DATA, AND PHONE PRIOR TO SUBMISSION OF THEIR BID.
3. ANY DISCREPANCIES BETWEEN THE CONSTRUCTION DOCUMENTS AND THE CONDITIONS OBSERVED SHALL BE BROUGHT TO THE ATTENTION, IN WRITING, TO THE ARCHITECT AND/OR ENGINEER PRIOR TO PROCEEDING WITH CONSTRUCTION.

PLUMBING LIST OF DRAWINGS (LoD):

SHEET TAG	TITLE	SCALE
P 0.00	PLUMBING GENERAL NOTES AND SPECIFICATIONS.	NTS
P 0.01	PLUMBING CODE CHECKING.	NTS
P 1.01	MAIN FLOOR - WATER SUPPLY LAYOUT.	3/8"=1'-0"
P 2.01	MAIN FLOOR - SEWER LAYOUT.	3/8"=1'-0"
P 3.01	HOT WATER CALCULATION AND DATA SHEETS.	NTS
P 3.02	PLUMBING GENERAL DETAILS.	NTS

CLIENT:

ADDRESS:

CONFIDENTIALITY STATEMENT:

ALL DRAWINGS AND WRITTEN MATERIALS APPEARING HEREIN CONSTITUTE THE ORIGINAL AND UNPUBLISHED WORK OF THE DESIGNER AND THE SAME MAY NOT BE DUPLICATED, USED OR DISCLOSED WITHOUT CONSENT OF THE DESIGNER.

NOTES:

1. ALL DIMENSIONS HEREIN ARE IN IMPERIAL UNITS UNLESS STATED OTHERWISE.
2. THESE DRAWINGS ARE TO BE READ IN CONJUNCTION WITH ALL RELEVANT DESIGNER, ENGINEER OR SPECIALIST DRAWINGS AND SPECIFICATIONS.
3. THE CONTRACTOR MUST CHECK ALL DIMENSION AT SITE BEFORE COMMENCING WORK.
4. THE CONTRACTOR IS RESPONSIBLE FOR PROVIDING ALL NECESSARY TEMPORARY SUPPORT TO THE BUILDING AND ANY ADJACENT STRUCTURES.

REV. NO	DESCRIPTION	DATE	BY

PROJECT:

TITLE:
PLUMBING GENERAL NOTES AND SPECIFICATIONS

PROJ. NO.	PROJ. ENGR.	SCALE @ 24X36:
		NTS

DRAWING NO. **P 0.00**

REV.

PRELIMINARY

CALIFORNIA PLUMBING CODE CHECKING:

PIPE SUPPORTS:

TABLE 313.3
HANGERS AND SUPPORTS

MATERIALS	TYPES OF JOINTS	HORIZONTAL	VERTICAL
Cast	Lead and Oakum	5 feet, except 10 feet where 10 foot length are installed[1, 2, 3]	Base and each floor, not to exceed 15 feet
	Compression Gasket	Every other joint, unless over 4 feet then support each joint[1, 2, 3]	Base and each floor, not to exceed 15 feet
Cast-Iron Hubless	Shielded Coupling	Every other joint, unless over 4 feet then support each joint[1, 2, 3, 4]	Base and each floor, not to exceed 15 feet
Copper & Copper Alloys	Soldered, Brazed, Threaded, or Mechanical	1 ½ inches and smaller, 6 feet; 2 inches and larger, 10 feet	Each floor, not to exceed 10 feet[5]
Steel Pipe for Water or DWV	Threaded or Welded	¾ inch and smaller, 10 feet; 1 inch and smaller, 12 feet	Every floor, not to exceed 25 feet[5]
Steel Pipe for Gas	Threaded or Welded	½ inch, 6 feet; ¾ inch and 1 inch, 8 feet; 1 ¼ inches and larger, 10 feet	½ inch, 6 feet; ¾ inch and 1 inch, 8 feet; 1 ¼ inches every floor level
Schedule 40 PVC and ABS DWV	Solvent Cemented	All sizes, 4 feet; allow for expansion every 30 feet[3]	Base and each floor; provide mid-story guides; provide for expansion every 30 feet
CPVC	Solvent Cemented	1 inch and smaller, 3 feet; 1 ¼ inches and larger, 4 feet	Base and each floor; provide mid-story guides
CPVC-AL-CPVC	Solvent Cemented	½ inch, 5 feet; ¾ inch, 65 inches; 1 inch, 6 feet	Base and each floor; provide mid-story guides
Lead	Wiped or burned	Continuous Support	Not to exceed 4 feet
Steel	Mechanical	In accordance with standards acceptable to the Authority Having Jurisdiction	
PEX	Cold Expansion, Insert and Compression	1 inch and smaller, 32 inches; 1 ¼ inches and larger, 4 feet	Base and each floor; provide mid-story guides
PEX-AL-PEX	Metal Insert and Metal compression	½ inch, ¾ inch, 1 inch — All sizes 98 inches	Base and each floor; provide mid-story guides
PE-AL-PE	Metal Insert and Metal compression	½ inch, ¾ inch, 1 inch — All sizes 98 inches	Base and each floor; provide mid-story guides
PE-RT	Insert and Compression	1 inch and smaller, 32 inches; 1 ¼ inches and larger, 4 feet	Base and each floor; provide mid-story guides
Polypropylene (PP)	Fusion weld (socket, but, saddle, electrofusion), threaded (metal threads only), or mechanical	1 inch and smaller, 32 inches; 1 ¼ inches and larger, 4 feet	Base and each floor; provide mid-story guides

For SI units: 1 inch = 25.4 mm, 1 foot = 304.8 mm

Notes:

[1] Support adjacent to joint, not to exceed 18 inches (457 mm)

[2] Brace not to exceed 40 foot (12 192 mm) intervals to prevent horizontal movement.

[3] Support at each horizontal branch connection.

[4] Hangers shall not be placed on the coupling.

[5] Vertical water lines shall be permitted to be supported in accordance with recognized engineering principles with regard to expansion and contraction, where first approved by the Authority Having Jurisdiction.

DRAINAGE:

719.0 Cleanouts.

719.1 Locations. Cleanouts shall be placed inside the build ing near the connection between the building drain and the building sewer or installed outside the building at the lower end of the building drain and extended to grade.

Additional building sewer cleanouts shall be installed at intervals not to exceed 100 feet (30 480 mm) in straight runs and for each aggregate horizontal change in direction exceeding 135 degrees (2.36 rad)

719.2 No additional Cleanouts. Where a building sewer or a branch thereof does not exceed 10 feet (3048 mm) in length and is a straight-line projection from a building drain that is provided with a cleanout, no cleanout will be required at its point of connection to the building drain.

721.0 Location.

721.1 Building Sewer. Except as provided in Section 721.2, no building sewer shall be located in a lot other than the lot that is the site of the building or structure served by such sewer nor shall a building sewer be located at a point having less than the minimum distances referenced in Table 721.1.

706.0 Changes in Direction of Drainage Flow.

706.1 Approved Fittings. Changes in the direction of drainage piping shall be made by the approximate use of approved fittings and shall be of the angles presented by a one-sixteenth bend, one-eight bend, or one-sixth bend, or other approved fittings of equivalent sweep.

706.2 Horizontal to Vertical. Horizontal drainage lines, connecting with a vertical stack, shall enter through 45 degree (0.79 rad) wye branch, 60 degree (1.05 rad) wye branches, combination wye and one-eighth bend branches, sanitary tee or sanitary tapped tee branches, or other approved fittings of equivalent sweep.

706.4 Vertical to Horizontal. Vertical drainage lines con necting with horizontal drainage lines shall enter through 45 degree (0.79 rad) wye branches, combination wye and one-eighth bend branches, or other approved fittings of equiva- lent sweep. Branches, or other approved fittings of equiva- lent sweep. Branches or offsets of 60 degrees (1.05 rad) shall be permitted to be used where installed in a true vertical posi- tion.

707.4 Location. Each horizontal drainage pipe shall be provided with a cleanout at its upper terminal, and each run of piping, that s more than 100 feet (30 480 mm) in total developed length, shall be provided with a cleanout for each 100 feet (30 480 mm), or fraction thereof, in length of such piping. An additional cleanout shall be provided in a drainage line for each aggregate horizontal change in direction exceeding 135 degrees (2.36 rad). A cleanout shall be installed above the fixture connecting fitting, serving each urinal, regardless of the location of the urinal in the building.

Exceptions

(1) Cleanouts shall be permitted to be omitted on a horizontal drain line less than 5 feet (1524 mm) in length unless such line is serving sinks or urinals

TABLE 703.2: MAXIMUM UNIT LOADING AND MAXIMUM LENGTH OF DRAINAGE AND VENT PIPING

SIZE OF PIPE (inches)	1 ¼	1 ½	2	3	4	5	6	8	10	12
Maximum Units Drainage Piping[1]										
Vertical	1	2[2]	16[3]	48[4]	256	600	1380	3600	5600	8400
Horizontal	1	1	8[3]	35[4]	216[5]	428[5]	720[5]	2640[5]	4680[5]	8200[5]
Maximum Length Drainage Piping										
Vertical	45	65	85	212	300	390	510	750	–	–
Horizontal										
Vent Piping Horizontal and Vertical[6]										
Maximum Units	1	8[3]	24	84	256	600	1380	3600	–	–
Maximum Lengths, (feet)	45	60	120	212	300	390	510	750		

For SI units: 1 inch = 25 mm, 1 foot = 304.8 mm

Notes:

[1] Excluding trap arm.

[2] Except for sinks, urinals, and dishwashers – exceeding 1 fixture unit.

[3] Except for six-unit traps or water closets.

[4] Only four water closets or six-unit traps allowed on a vertical pipe or stack, and not to exceed three water closets or six-unit traps on a horizontal branch or drain.

[5] Based on ⅛ inch per foot (20.8 mm/m) slope. For ⅛ of an inch per foot (10.4 mm/m) slope, multiply horizontal fixture units by a factor of 0.8.

[6] The diameter of an individual vent shall be not less than 1 ¼ inches (32 mm) nor less than one-half the diameter of the drain to which it is connected. Fixture unit load values for drainage and vent piping shall be computed from Table 702.1 and Table 702.2(2). Not to exceed one third of the total permitted length of a vent shall be permitted to be installed in a horizontal position. Where vents are increased one pipe size for their entire length, the maximum length limitations specified in this table do not apply. This table is in accordance with the requirements of Section 901.3.

707.5 Cleaning. Each cleanout shall be installed so that it opens to allow cleaning in the direction of flow of the soil or waste or at right angles thereto and, except in the case of wye branch and end-of-line cleanouts, shall be installed vertically above the flow line of the pipe.

708.0 Grade of Horizontal Drainage Piping.

708.1 General. Horizontal drainage piping shall be run in practical alignment and a uniform slope of not less than ¼ inch per foot (20.8 mm/m) or 2 percent toward the point of disposal provided that, where it is impractical due to the depth of the street sewer, to the structural features, or to the arrangement of a building or structure to obtain a slope of ¼ inch per foot (20.8 mm/m) or 2 percent, such pipe or piping 4 inches (100 mm) or larger in diameter shall be permitted to have a slope of not less than ⅛ inch per foot (10.4 mm/m) or 1 percent, where first approved by the Authority Having Jurisdiction.

TABLE 721.1
MINIMUM HORIZONTAL DISTANCE REQUIRED FROM BUILDING SEWER (feet)

Buildings or structures[1]	2
Property line adjoing private property	Clear[2]
Water supply wells	50[3]
Streams	50
On-site domestic water service line	1[4]
Public water main	10[5, 6]

WATER CONVERSION & WATER CONSUMPTION:

WATER CONSERVING PLUMBING FIXTURES AND FITTINGS
Plumbing fixtures and fittings shall comply with the following: (2022 CGBSC, California Plumbing Code (CPC) and Table 1401.1 of the CPC)
4303.1.1 All Water closets: ≤1.28 gal/flush Tank type water closet shall be certified to the performance criteria of the U.S. EPA WaterSense Specification for Tank-type Toilets.
4303.1.2 Urinals: ≤0.5 gal/flush
4303.1.3.1 Single showerheads: ≤1.8 gpm @ 80 psi
4303.1.3.2 Multiple showerheads: combined flow rate of all showerheads and/or other shower outlets controlled by a single valve shall not exceed 1.8 gpm @ 80 psi or only one shower outlet is to be in operation at a time.
4303.1.4.1 Residential Lavatory Faucets: 0.8 gpm @ 20 psi ≤ **Flow Rate** ≤1.2 gpm @ 60 psi
4303.1.4.2 Lavatory Faucets in common and Public Use Areas (outside of dwellings or sleeping units) in residential buildings: ≤0.5 gpm @ 60 psi
4303.1.4.3 Metering Faucets: ≤0.25 gallons per cycle
4303.1.4.4 Kitchen Faucets: ≤1.8 gpm @ 60 psi; Maximum Flow Rate of 1.8 gpm
PLUMBING FIXTURE CERTIFICATION REQUIRED: A plumbing fixture certification must be completed and signed by either a licensed general contractor, or a plumbing subcontractor, or the building owner certifying the flow rate of the fixtures installed. A copy of the certification can be obtained from the development services department.

407.3 Limitation of Hot water Temperature for Public Lavatories. Hot water delivered from public-use lavatories shall be limited to a maximum temperature of 120°F (49°C) by a device that complies with ASSE 1070/ASME A112.1070/CSA B125.70. The water heater thermostat shall not be considered a control for meeting this provision.

407.5 Waste Outlet. Lavatories shall have a waste outlet and fixtures tailpiece not less than 1 ¼ inches (32 mm) in diameter.

409.4 Limitation of Hot Water in Bathtubs and Whirlpool Bathtubs. The maximum hot water temperature discharging from the bathtub and whirlpool bathtub filler shall be limited to 120°F (49°C) by a device that complies with ASSE 1070/ASME A112.1070/CSA B125.70. The water heater thermostat shall not be considered a control for meeting this provision.

WATER HEATER:

501.1 Applicability.
The minimum capacity for storage water heaters shall be in accordance with the first-hour rating listed in Table 501.1(2).

Number of Bathrooms	1 to 1.5			2 to 2.5				3 to 3.5			
Number of Bedrooms	1	2	3	2	3	4	5	3	4	5	6
First hour rating,[2] Gallons	38	49	49	49	62	62	74	62	74	74	74

For SI units: 1 gallon = 3.785 L.

Notes:

[1] The first-hour rating is found on the "Energy Guide" label.

[2] Solar water heaters shall be sized to meet the appropriate first-hour rating as shown in the table.

504.0 Water Heater Requirements.

504.1 Location. Water heater installations in bedrooms and bathrooms shall comply with one of the following [NFPA54:10.27.1]:

(1) Fuel-burning water heaters shall be permitted to be installed in a closet located in the bedroom or bathroom provided the closet is equipped with a listed, gasketed door assembly and a listed self-closing device. The self- closing door assembly shall meet the requirements of Section 504.1.1. The door assembly shall meet the requirements of Section 504.1.2. Combustion air for such installations shall be obtained from the outdoors in accordance with Section 506.4. The closet shall be for the exclusive use of the water heater.

(2) Water heater shall be of the direct vent type. [NFPA 54: 10.27.1(2)]

504.2 Vent. Water heaters of other than the direct-vent type shall be located as close as practical to the chimney or gas vent.

507.2 Seismic provisions. *Water heaters shall be anchored or strapped to resist horizontal displacement due to earthquake motion. Strapping shall be at points within the upper one third (⅓) and lower one-third (⅓) of its vertical dimensions. At the lower point, a minimum distance of four (4) inches (102 mm) shall be maintained above the controls with the strapping.*

507.4 Ground Support. A water heater supported from the earth shall rest on level concrete or other approved base extending not less than 3 inches (76 mm) above the adjoining ground level.

507.5 Drainage Pan. Where a water heater is located in an attic, in or on an attic ceiling assembly, floor-ceiling assembly, or floor-subfloor assembly where damage results from a leaking water heater, a watertight pan of corrosion-resistant materials shall be installed beneath the water heater with not less than ¾ of an inch (20 mm) diameter drain to an approved location. Such pan shall be not less than 1 ½ (38 mm) in depth.

507.13 Installation in Residential Garages. Appliances in residential garages and in adjacent spaces that open to the garage and are not part of the living space of a dwelling unit shall be installed so that all burners and burner-ignition devices are located not less than 18 inches (457 mm) above the floor unless listed as flammable vapor ignition resistant. [NFPA 54:9.1.10.1]

508.4.4 Lighting and Convenience Outlet. A permanent 120 V receptacle outlet and a lighting fixture shall be installed near the appliance. The switch controlling the lighting fixture shall be located at the entrance to the passageway. [NFPA 54:9.5.3]

508.2.1 Installation at roof: Clearance. Appliances shall be installed on a well-drained surface of the roof. At least 6 feet (1829 mm) of clearance shall be available between any part of the appliance, and the edge of a roof or similar hazard, or rigidly fixed rails, guards, parapets, or other building structures at least 42 inches (1067 mm) in height shall be provided on the exposed side. [NFPA 54:9.4.2.2]

VENT:

906.0 Vent Termination.

906.1 Roof Termination. Each vent pipe or stack shall extend through its flashing and shall terminate vertically not less than 6 inches (152 mm) above the roof nor less than 1 foot (305 mm) from a vertical surface. ABS and PVC piping exposed to sunlight shall be protected by water based synthetic latex paints.

906.2 Clearance. Each vent shall terminate not less than 10 feet (3048 mm) from, or not less than 3 feet (914 mm) above, an openable window, door, opening, air intake, or vent shaft, or not less than 3 feet (914 mm) in every direction from a hot line, alley and street excepted.

909.0 Special Venting for Island Fixtures.

909.1 General. Traps for island sinks and similar equipment shall be roughed in above the floor and shall be permitted to be vented by extending the vent as high as possible, but not less than the drainboard height and then returning it down- ward and connecting it to the horizontal sink drain immediately downstream from the vertical fixture drain. The return vent shall be connected to the horizontal drain through a wye-branch fitting and shall, in addition, be provided with a foot vent taken off the vertical fixture vent by means of a wye branch immediately below the floor and extending to the nearest partition and then through the roof to the open air, or shall be permitted to be connected to other vents at a point not less than 6 inches (152 mm) above the flood-level rim of
the fixtures served. Drainage fittings shall be used on the vent below the floor level, and a slope of not less than ¼ inch per foot (20.8 mm/m) back to the drain shall be maintained. The return bend used under the drainboard shall be a one-piece fitting or an assembly of a 45 degree (0.79 rad), a 90 degree (1.57 rad), and a 45 degree (0.79 rad) elbow in the order named. Pipe sizing shall be as elsewhere required in this code.

The island sink drain, upstream of the returned vent, shall serve no other fixtures. An accessible cleanout shall be installed in the vertical portion of the foot vent.

WATER SUPPLY:

TABLE 611.4
SIZING OF RESIDENTIAL WATER SOFTENERS[4]

REQUIRED SIZE OF SOFTENER CONNECTION (inches)	NUMBER OF BATHROOM GROUPS SERVED[1]
¾	Up to 2[2]
1	Up to 4[3]

For Si units: 1 inch = 25 mm

Notes:

[1] Installation of a kitchen sink and dishwasher, laundry tray, and automatic clothes washer permitted without additional size increase.

[2] An additional water closet and lavatory permitted.

[3] Over four bathroom groups, the softener size shall be engineered for the specific installation.

[4] See also Appendix A, Recommended Rules for Sizing the Water Supply Systems, and Appendix C, Alternate Plumbing Systems, for alternate methods of sizing water supply systems.

A backflow preventer shall not be required to separate a stand-alone sprinkler syste from the water distribution system where the sprinkler system material is in accordance with the requirements of Section 604.0.

606.1 General. Valves up to and including 2 inches (50 mm) in size shall be copper alloy or other approved material. Sizes exceeding 2 inches (50 mm) shall be permitted to have cast iron or copper alloy bodies. Each gate or ball valve shall be a fullway or full-port type with working parts of the non-corrosive material. Valves carrying water used in potable water systems intended to supply drinking water shall comply with the requirements of NSF 61 and ASME A112.4.14, ASME B16.34, ASTM F1970, ASTM F2389 AWWA C500, AWWA C504, AWWA C507, IAPMO Z1157, MSS SP-67, MSS SP- 70, MSS SP-71, MSS SP-72, MSS SP-78, MSS SP-80, MSS SP-110, MSS SP-122, or NSF 359.

608.4 Pressure Relief Valves. Each pressure relief valve shall be an approved automatic type with drain, and each such relief valve shall be set at a pressure of not more than 150 psi (1034 kPa). No shutoff valve shall be installed between the relief valve and the system.

FIRESTOP PROTECTION

1404.0 Combustible Piping Installations.

1404.2 Fire-Resistance Rating. Where penetrating a fire-resistance-rated wall, partition, floor, floor-ceiling assembly, roof-ceiling assembly, or shaft enclosure, the fire-resistance rating of the assembly shall be restored to its original rating.

1404.3 Firestop Systems. Penetrations shall be protected by an approved penetration firestop system installed as tested in accordance with ASTM E119, ASTM E814, UL 263, or UL 1479 with a positive pressure differential of not less than 0.01 of an inch of water (0.002 kPa). Systems shall have and F rating of not less than 1 hour but not less than the required fire-resistance rating of the assembly being penetrated. Systems protecting floor penetrations shall have a T rating of not less than 1 hour but not less than the required fire-resistance rating of the floor penetrations shall have a T rating of not less than 1 hour but not less than the required fire-resistance rating of the floor being penetrated. Floor penetrations contained within the cavity of a wall at the location of the floor penetration do not require a T rating. No T rating shall be required for floor penetrations by piping that is not in direct
contact with combustible material.

1404.6 Sleeves. Where sleeves are used, the sleeves shall be securely fastened to the fire-resistance-rated assembly. The (inside) annular space between the sleeve and the fire-resistance-rated assembly shall be firestopped in accordance with this chapter.

1405.0 Noncombustible Piping Installations.

1405.3 Firestop Systems. Penetrations shall be protected by an approved penetration firestop system installed as tested in accordance with ASTM E119, ASTM E814, UL 263, or UL 1479 with a positive pressure differential of not less than 0.01 of an inch of water (0.002 kPa). Systems shall have an F rating of not less than 1 hour but not less than the required fire-resistance rating of the assembly being penetrated. Systems protecting floor penetrations shall have a T rating of not less than 1 hour but not less than the required fire-resistance rating of the floor being penetrated. Floor penetrations contained within the cavity of a wall at a location of the floor penetration do not require a T rating. No T rating shall be required for floor penetrations by piping that is not in direct contact with combustible material.

1405.6 Sleeves. Where sleeves are used, the sleeves shall be securely fastened to the fire-resistance-rated assembly. The (inside) annular space between the sleeve and the penetrating item and the (outside) annular space between the sleeve and the fire-resistance-rated assembly shall be firestopped in accordance with this chapter.

BCE COMPANY

CLIENT:

ADDRESS:

CONFIDENTIALITY STATEMENT:

ALL DRAWINGS AND WRITTEN MATERIALS APPEARING HEREIN CONSTITUTE THE ORIGINAL AND UNPUBLISHED WORK OF THE DESIGNER AND THE SAME MAY NOT BE DUPLICATED, USED OR DISCLOSED WITHOUT CONSENT OF THE DESIGNER.

NOTES:

1. ALL DIMENSIONS HEREIN ARE IN IMPERIAL UNITS UNLESS STATED OTHERWISE.
2. THESE DRAWINGS ARE TO BE READ IN CONJUNCTION WITH ALL RELEVANT DESIGNER, ENGINEER OR SPECIALIST DRAWINGS AND SPECIFICATIONS.
3. THE CONTRACTOR MUST CHECK ALL DIMENSION AT SITE BEFORE COMMENCING WORK.
4. THE CONTRACTOR IS RESPONSIBLE FOR PROVIDING ALL NECESSARY TEMPORARY SUPPORT TO THE BUILDING AND ANY ADJACENT STRUCTURES.

REV. NO.	DESCRIPTION	DATE	BY

PROJECT:

TITLE: **PLUMBING CODE CHECKING.**

PROJ. NO.	PROJ. ENGR.	SCALE @ 24X36: NTS

DRAWING NO. **P 0 . 0 1**

REV.

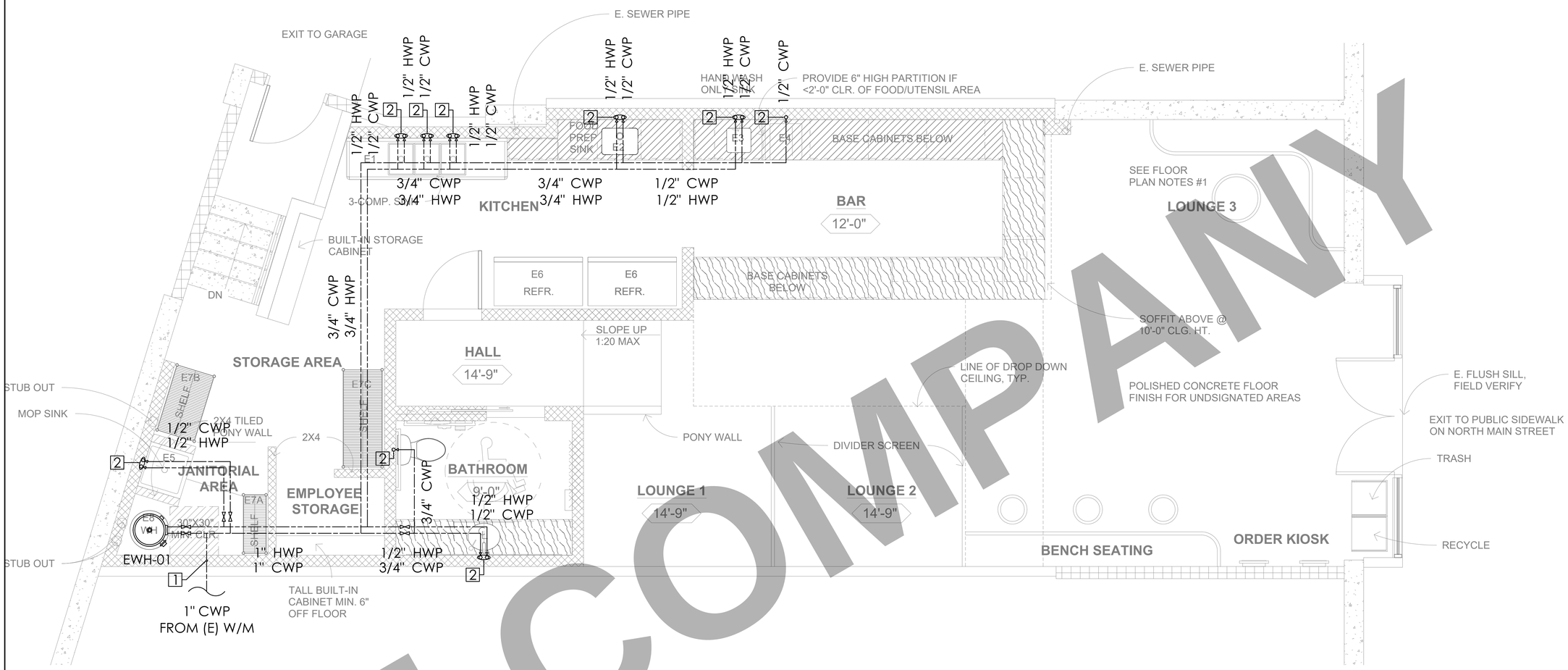

WATER SUPPLY SHEET NOTES:

1 — DCW, DHW RISE TO HIGH LEVEL.

2 — DCW & DHW TO FIXTURE CONNECTION.

GENERAL NOTES:

1. PRIOR TO PERFORMING WORK, CONTRACTOR TO COORDINATE EXACT PIPE SIZES, INVERT ELEVATIONS, PRESSURES FOR LOCATIONS OF ANY SEWER, WATER PIPING AND WATER METER WITH CIVIL UTILITIES DRAWINGS, AND ANY OTHER ENGINEER AS APPLICABLE.
2. PRIOR TO PERFORMING WORK, CONTRACTOR TO COORDINATE PIPE ROUTING WITH ALL OTHER TRADES AND EXISTING FIELD CONDITIONS.
3. REFER TO MECHANICAL PLANS FOR PLUMBING SPECIFICATION OF MATERIAL, INSULATION AND INSTALLATION REQUIREMENTS.
4. CONTRACTOR IS RESPONSIBLE FOR ROUGH-IN COORDINATION AND LOCATIONS. REFER TO ARCHITECTURAL PLANS FOR LOCATIONS AND FIXTURES.
5. CONTRACTOR IS RESPONSIBLE FOR ANY REQUIRED CUTTING AND PATCHING.
6. ALL NOTCHING, BORING, AND CUTTING OF HOLES IN WALL STUDS AND FLOOR JOISTS SHALL BE PERFORMED BASED ON THE LATEST ADOPTED AND APPROVED EDITION OF THE BUILDING CODE.
7. ALL PLUMBING FIXTURES SHALL BE OF WATER CONSERVATION TYPE AS REQUIRED BY LOCAL AUTHORITY HAVING JURISDICTION.
8. ALL WATER PIPING SHALL BE INSTALLED ON INTERIOR SIDE OF THE BUILDING WALL INSULATION.
9. CONTRACTOR SHALL PROVIDE VALVES LOCATED ABOVE LAY-IN CEILING OR 24"x24" CEILING ACCESS PANEL COORDINATE FINAL LOCATION AND SIZE WITH ARCHITECT. PROVIDE BALANCING VALVES FOR HOT WATER RETURN SYSTEM AS REQUIRED.
10. ALL SANITARY DRAINAGE PIPING 4" AND SMALLER SHALL BE SLOPED AT $\frac{1}{4}$" PER FOOT. PIPING 4" AND LARGER SHALL BE SLOPED AT $\frac{1}{8}$" PER FOOT.
11. ALL CONDENSATE DRAIN PIPING SHALL BE SLOPED AT $\frac{1}{8}$" PER FOOT AND PROVIDE ACCESSIBLE CLEANOUTS AT ALL CHANGES OF DIRECTION.
12. VENTS THAT TERMINATE AT THE ROOF SHALL BE A MINIMUM OF 10' FROM ANY FRESH AIR INTAKE.
13. REFER TO THE PLUMBING DIAGRAMS FOR GUIDANCE OF INSTALLATION INTENT. CONTRACTOR IS TO PROVIDE ALL COMPONENTS NECESSARY TO MEET THE DESIGN INTENT, WHETHER SHOWN IN DIAGRAM OR NOT.

FROM 2022 CPC - TABLE 610.3:
WATER SUPPLY FIXTURE UNITS LOADS:

FIXTURE	W.S.F.U	QTY.	TOTAL W.S.F.U
HANDWASH	1.5	1	1.5
3- COMP. SINK	3.0	1	3.0
FOOD PREP SINK	1.5	1	1.5
ICE MACHINE	0.5	1	0.5
MOP SINK	3.0	1	3.0
WATER CLOSET	2.5	1	2.5
LAVATORY	1.0	1	1.0
TOTAL BUILDING WSFU =			**13.0**

AS PER 2022 CPC - TABE 610.4:
- **LONGEST RUN IS APPROX. 150 FT.**
- **W/M PRESSURE RANGE 30-45 PSI,**
- **MAIN CWP NOT LESS THAN 1"Ø**
- **W/M SIZE NOT LESS THAN 3/4"Ø**

SCHEDULE No. 1
ELECTRIC WATER HEATER

SCHEDULE	EWH-01
LOCATION	JANITORIAL AREA
MANUFACTURER	AO-SMITH
MODEL	DRE-52
TYPE	ELECTRIC
CAPACITY (GALLONS)	50
APPROX. WEIGHT (lbs)	265
HEIGHT (in)	55.7"
WATER CONNECTION SIZE	3/4"
ELECTRICAL (V/PH/HZ)	208/1/60

PCE COMPANY

CLIENT:

ADDRESS:

CONFIDENTIALITY STATEMENT:

ALL DRAWINGS AND WRITTEN MATERIALS APPEARING HEREIN CONSTITUTE THE ORIGINAL AND UNPUBLISHED WORK OF THE DESIGNER AND THE SAME MAY NOT BE DUPLICATED, USED OR DISCLOSED WITHOUT CONSENT OF THE DESIGNER.

NOTES:

1. ALL DIMENSIONS HEREIN ARE IN IMPERIAL UNITS UNLESS STATED OTHERWISE.
2. THESE DRAWINGS ARE TO BE READ IN CONJUNCTION WITH ALL RELEVANT DESIGNER, ENGINEER OR SPECIALIST DRAWINGS AND SPECIFICATIONS.
3. THE CONTRACTOR MUST CHECK ALL DIMENSION AT SITE BEFORE COMMENCING WORK.
4. THE CONTRACTOR IS RESPONSIBLE FOR PROVIDING ALL NECESSARY TEMPORARY SUPPORT TO THE BUILDING AND ANY ADJACENT STRUCTURES.

REV. NO.	DESCRIPTION	DATE	BY

PROJECT:

TITLE:
MAIN FLOOR WATER SUPPLY LAYOUT

PROJ. NO.	PROJ. ENGR.	SCALE @ 24X36:
		3/8"=1'-0"

DRAWING NO. **P1.01**

REV.

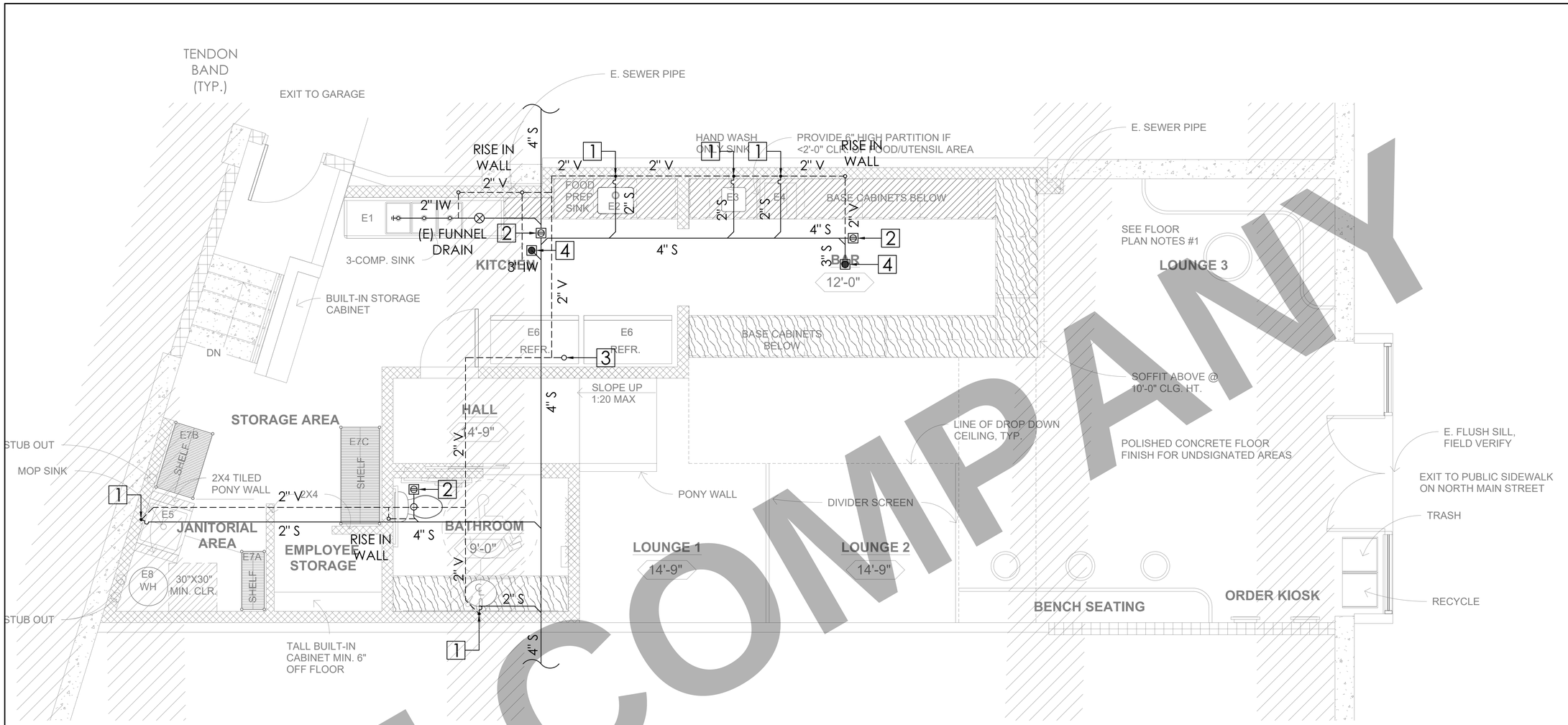

GENERAL NOTES:

1. PRIOR TO PERFORMING WORK, CONTRACTOR TO COORDINATE EXACT PIPE SIZES, INVERT ELEVATIONS, PRESSURES FOR LOCATIONS OF ANY SEWER, WATER PIPING AND WATER METER WITH CIVIL UTILITIES DRAWINGS, AND ANY OTHER ENGINEER AS APPLICABLE.
2. PRIOR TO PERFORMING WORK, CONTRACTOR TO COORDINATE PIPE ROUTING WITH ALL OTHER TRADES AND EXISTING FIELD CONDITIONS.
3. REFER TO MECHANICAL PLANS FOR PLUMBING SPECIFICATION OF MATERIAL, INSULATION AND INSTALLATION REQUIREMENTS.
4. CONTRACTOR IS RESPONSIBLE FOR ROUGH-IN COORDINATION AND LOCATIONS. REFER TO ARCHITECTURAL PLANS FOR LOCATIONS AND FIXTURES.
5. CONTRACTOR IS RESPONSIBLE FOR ANY REQUIRED CUTTING AND PATCHING.
6. ALL NOTCHING, BORING, AND CUTTING OF HOLES IN WALL STUDS AND FLOOR JOISTS SHALL BE PERFORMED BASED ON THE LATEST ADOPTED AND APPROVED EDITION OF THE BUILDING CODE.
7. ALL PLUMBING FIXTURES SHALL BE OF WATER CONSERVATION TYPE AS REQUIRED BY LOCAL AUTHORITY HAVING JURISDICTION.
8. ALL WATER PIPING SHALL BE INSTALLED ON INTERIOR SIDE OF THE BUILDING WALL INSULATION.
9. CONTRACTOR SHALL PROVIDE VALVES LOCATED ABOVE LAY-IN CEILING OR 24"x24" CEILING ACCESS PANEL COORDINATE FINAL LOCATION AND SIZE WITH ARCHITECT. PROVIDE BALANCING VALVES FOR HOT WATER RETURN SYSTEM AS REQUIRED.
10. ALL SANITARY DRAINAGE PIPING 4" AND SMALLER SHALL BE SLOPED AT $\frac{1}{4}$" PER FOOT. PIPING 4" AND LARGER SHALL BE SLOPED AT $\frac{1}{8}$" PER FOOT.
11. ALL CONDENSATE DRAIN PIPING SHALL BE SLOPED AT $\frac{1}{8}$" PER FOOT AND PROVIDE ACCESSIBLE CLEANOUTS AT ALL CHANGES OF DIRECTION.
12. VENTS THAT TERMINATE AT THE ROOF SHALL BE A MINIMUM OF 10' FROM ANY FRESH AIR INTAKE.
13. REFER TO THE PLUMBING DIAGRAMS FOR GUIDANCE OF INSTALLATION INTENT. CONTRACTOR IS TO PROVIDE ALL COMPONENTS NECESSARY TO MEET THE DESIGN INTENT, WHETHER SHOWN IN DIAGRAM OR NOT.

SANITARY SHEET NOTES:

1 — WASTE DROP AND 2" VENT RISE.
2 — 4" FLOOR CLEAN-OUT.
3 — 3" VENT STACK TO ABOVE.
4 — 3" FLOOR DRAIN.

FROM 2022 CPC - TABLE 702.1:
DRAINAGE FIXTURE UNIT VALUES (DFU)

FIXTURE	D.F.U	QTY.	TOTAL D.F.U
HANDWASH	2.0	1	2.0
3- COMP. SINK	3.0	1	3.0
FOOD PREP SINK	2.0	1	2.0
ICE MACHINE	0.5	1	0.5
MOP SINK	3.0	1	3.0
WATER CLOSET	3.0	1	3.0
LAVATORY	1.0	1	1.0
FLOOR DRAIN	2.0	2	4.0
TOTAL BUILDING DFU =			**18.5**

ICE COMPANY

CLIENT:

ADDRESS:

CONFIDENTIALITY STATEMENT:

ALL DRAWINGS AND WRITTEN MATERIALS APPEARING HEREIN CONSTITUTE THE ORIGINAL AND UNPUBLISHED WORK OF THE DESIGNER AND THE SAME MAY NOT BE DUPLICATED, USED OR DISCLOSED WITHOUT CONSENT OF THE DESIGNER.

NOTES:

1. ALL DIMENSIONS HEREIN ARE IN IMPERIAL UNITS UNLESS STATED OTHERWISE.
2. THESE DRAWINGS ARE TO BE READ IN CONJUNCTION WITH ALL RELEVANT DESIGNER, ENGINEER OR SPECIALIST DRAWINGS AND SPECIFICATIONS.
3. THE CONTRACTOR MUST CHECK ALL DIMENSION AT SITE BEFORE COMMENCING WORK.
4. THE CONTRACTOR IS RESPONSIBLE FOR PROVIDING ALL NECESSARY TEMPORARY SUPPORT TO THE BUILDING AND ANY ADJACENT STRUCTURES.

REV. NO.	DESCRIPTION	DATE	BY

PROJECT:

TITLE:
MAIN FLOOR SEWER LAYOUT

PROJ. NO.	PROJ. ENGR.	SCALE @ 24X36:
		3/8"=1'-0"

DRAWING NO. **P 2 . 0 1**

REV.

A.O. Smith | Commercial Electric Water Heaters

GOLD SERIES
COMMERCIAL ELECTRIC WATER HEATER

Designed for use as a recovery heater having its own storage tank.
Note: Not recommended for sanitizing water applications.

FEATURES
- Meets the standby loss requirements of the U.S. Department of Energy and current edition of AHRAE/IES 90.1

INCOLOY ELEMENTS
- Heavy-duty medium watt density elements have incoloy sheathing: provide excellent protection against oxidation and scaling.

GLASSLINED TANK
- Three sizes: 50, 80 and 119 gallon capacity. Tank interior is coated with glass specially developed by A. O. Smith for water heater use. Tanks rated at 150 PSI (1034 kPa) working pressure

FUSING
- Protects all elements, thermostats, and internal wiring circuits against excess current flow. Meets National Electrical Code requirements that non-ASME tanks must have internal fusing when current draw exceeds 48 amps. Available as an option on Canadian built heaters.

STANDARD VOLTAGES
- 208, 240 and 480V single-phase and three-phase delta. Convertible from three-phase to single-phase (in field) and vice versa. 277V single-phase also available.

TERMINAL BLOCK
- Factory installed. Just bring the electrical service to the heater and connect to block.

CONTROLS
- One temperature control (adjustable through a range of 120° to 181°F) and manual reset high temperature cut-off per element. Thermostat step control may be achieved by varying settings on individual temperature controls. Located behind hinged control compartment door for quick, easy access.

OTHER STANDARD FEATURES
- Surface mounted thermostats
- Simplified circuitry, color coded for ease of service
- Two anode rods for maximum corrosion protection
- Cabinet has bonderized undercoat with baked enamel finish
- Bottom inlet and top outlet openings
- Brass drain valve
- CSA Certified and ASME rated T&P relief valve
- Single panel control box
- Foam insulation reduces costly heat loss.

3-YEAR LIMITED TANK / 1-YEAR LIMITED PARTS WARRANTY
- For complete warranty information, consult written warranty or go to hotwater.com

MODELS
DRE-52, 80, 120

CLASSIFIED UL WATER QUALITY · Low Lead Content · UL LISTED · ASME HLW OPTIONAL · AHRI CERTIFIED www.ahridirectory.org

© September 2021 A. O. Smith Corporation. All rights reserved.

A.O. Smith | Commercial Electric Water Heaters

OPTIONS
- UL and cUL listed conversion kits to adjust voltage and kW requirements in the field before and after installation
- ASME 160 psi (1103 kPa) tank construction
- International voltages – 220, 380, 400, 415, 575, and 600 volts, three phase available with Y connected elements
- MANIFOLD KITS – for multiple tank installations. Two heaters -part # 100109231, three heaters- part # 100109232 and four heaters- part # 100109233

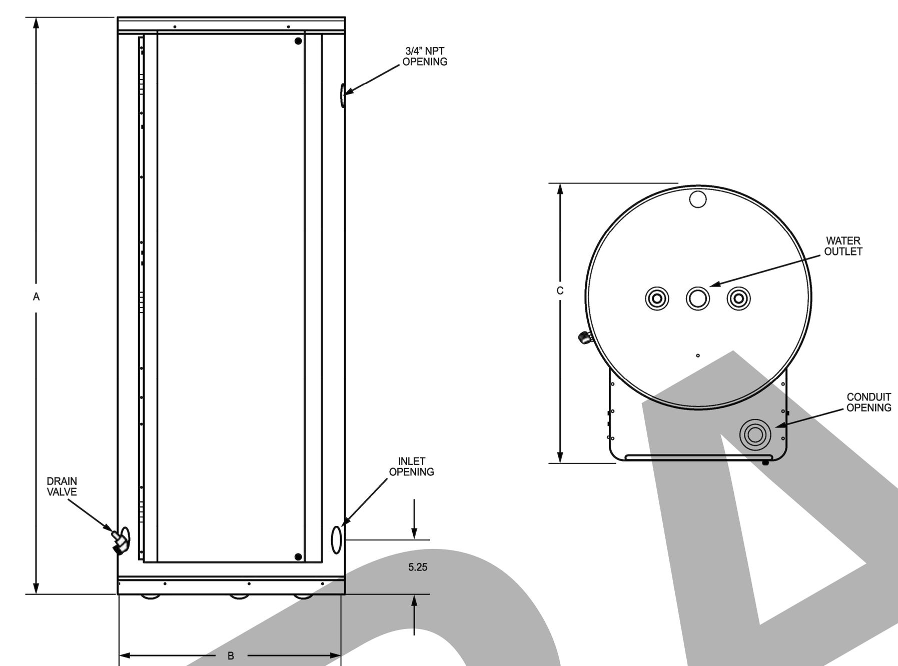

DIMENSIONS

Model Number	Tank Capacity		Dimensions A		Dimensions B		Dimensions C		Inlet/ Outlet (NPT)	Approx. Shipping Weight	
	gal.	litre	Inches	MM	Inches	MM	Inches	MM	Inches	lbs	kG
DRE-52	50	189	55-3/4	142	21-3/4	55.2	27	68.6	1-1/4	265	120
DRE-80	80	302	60-1/4	153	25-1/2	64.8	31	78.7	1-1/4	280	127
DRE-120	119	450	62-1/4	158.1	29-1/2	75	35	88.9	1-1/4	390	177

For ASME Construction add "A" to the model number (example: DRE 52A 24).

A.O. Smith | Commercial Electric Water Heaters

RECOVERY RATE IN GALLONS PER HOUR AT TEMPERATURE RISE OF

Standard kW Input	BTU/ Hour	30°F	40°F	50°F	60°F	70°F	80°F	90°F	100°F	110°F	120°F	130°F	140°F
		17°C	22°C	28°C	33°C	39°C	45°C	50°C	56°C	61°C	67°C	72°C	78°C
12.3	41,980	168	126	101	84	72	63	56	50	46	42	39	36
		636	477	382	318	273	238	212	189	174	159	148	136
13.5	46,075	184	138	111	92	79	69	62	55	50	46	43	40
		698	523	419	349	299	262	233	209	190	174	161	150
15	51,195	205	154	123	102	88	77	68	61	56	51	47	44
		775	582	465	388	332	291	258	233	211	194	149	166
18	61,434	246	184	148	123	105	92	82	74	67	62	57	53
		930	698	558	465	399	349	310	279	254	233	215	199
24	81,912	328	246	197	164	140	123	109	98	90	82	76	70
		1241	930	744	620	532	465	414	372	338	310	286	266
27	92,151	369	276	221	185	158	138	123	111	101	92	85	79
		1396	1047	938	609	509	523	465	410	391	340	322	299
30	102,390	410	307	246	205	176	154	137	123	112	102	95	88
		1551	1163	930	775	665	582	517	465	423	388	358	332
36	122,868	492	369	295	246	211	184	164	148	134	123	113	105
		1861	1396	1117	930	798	698	620	556	508	465	429	399
40.5	138,226	554	418	332	277	237	208	185	166	151	138	128	119
		2094	1570	1256	1047	897	785	698	628	634	582	537	498
45	153,585	615	461	369	307	263	230	205	184	168	154	142	132
		2326	1745	1398	1163	997	872	755	698	634	582	537	498
54	184,302	738	554	443	359	316	277	246	221	201	185	170	158
		2791	2094	1675	1396	1196	1047	930	837	761	696	644	598

Figured at 1 kW (3413 BTU) = 4.1 Gallons at 100°F temperature rise.

A.O. Smith | Commercial Electric Water Heaters

kW Input	Model Numbers Tank Capacity in Gallons			Number of Elements	Element Wattage	Full Load Current in Amperes Single Phase				Full Load Current in Amperes Three Phase		
	50	80	119			208V	240V	277V	480V	208V	240V	480V
12.3	DRE-52-12	DRE-80-12	DRE-120-12	3	4,100	59	51	44	26	34	30	15
13.5	DRE-52-13.5	DRE-80-13.5	DRE-120-13.5	3	4,500	64.9	56.3	48.7	28.1	37.5	32.5	16.2
15	DRE-52-15	DRE-80-15	DRE-120-15	3	5,000	72.1	62.5	54.2	31.3	41.6	36.1	18
18	DRE-52-18	DRE-80-18	DRE-120-18	3*	6,000	86.5	75	65	37.5	50	43.3	21.7
24	DRE-52-24	DRE-80-24	DRE-120-24	6	4,000	115.4	100	86.6	50	66.6	57.7	28.9
27	DRE-52-27	DRE-80-27	DRE-120-27	6	4,500	129.8	112.5	97.5	56.3	74.9	65	32.5
30	DRE-52-30	DRE-80-30	DRE-120-30	6	5,000	144.2	125	108.3	62.5	83.3	72.2	36.1
36	DRE-52-36	DRE-80-36	DRE-120-36	6*	6,000	173.1	150	130	75	99.9	86.6	43.3
40.5	N/A	DRE-80-40.5	DRE-120-40.5	9	4,500	194.7	168.8	146.2	84.4	112.4	97.4	48.7
45	N/A	DRE-80-45	DRE-120-45	9	5,000	216.3	187.5	162.5	93.8	124.9	108.3	54.1
54	N/A	DRE-80-54	DRE-120-54	9	6,000	N/A	225	194.9	112.5	149.9	129.9	65

*208 volt models may contain three (3) additional elements.
For ASME Construction add "A" to the model number (example: DRE 52A 24).

SUGGESTED SPECIFICATION

The heater(s) shall be Gold Series Commercial Electric Model Number ________________ as manufactured by A. O. Smith. Heater(s) shall be rated at ______________ kW,________volts, ______________ phase, 60 cycle AC, and listed by Underwriters' Laboratories and approved to the NSF Standard 5 by UL. Tank(s) shall be _________ (50, 80 or 119) gallon capacity. Tanks shall have____________ (150 [Std] or 160 [ASME]) psi working pressure and be equipped with extruded high density anode. All internal surfaces of the heater(s) exposed to water shall be glasslined with an alkaline borosilicate composition that has been fused-to-steel by firing at a temperature range of 1400°F to 1600°F. Electric heating elements shall be low watt density.
Each element shall be controlled by an individually mounted thermostat and high temperature cut-off switch. All internal circuits shall be fused. The outer jacket shall be of baked enamel finish and shall be provided with full size control compartment for performance of service and maintenance through hinged front panel and shall enclose the tank with foam insulation. Electrical junction box with heavy duty terminal block shall be provided. The drain valve shall be located in the front for ease of servicing. Heater tank shall have a three year limited warranty as outlined in the written warranty. Manufacturer shall supply ASME rated temperature and pressure relief valve. Fully illustrated instruction manual to be included. Meets standby loss requirements of the U. S. Department of Energy and current edition of ASHRAE/IES 90.1.

For technical information, call 800-527-1953. A. O. Smith Corporation reserves the right to make product changes or improvements without prior notice.

© September 2021 A. O. Smith Corporation. All rights reserved.

BCE COMPANY

CLIENT:

ADDRESS:

CONFIDENTIALITY STATEMENT:

ALL DRAWINGS AND WRITTEN MATERIALS APPEARING HEREIN CONSTITUTE THE ORIGINAL AND UNPUBLISHED WORK OF THE DESIGNER AND THE SAME MAY NOT BE DUPLICATED, USED OR DISCLOSED WITHOUT CONSENT OF THE DESIGNER.

NOTES:

1. ALL DIMENSIONS HEREIN ARE IN IMPERIAL UNITS UNLESS STATED OTHERWISE.
2. THESE DRAWINGS ARE TO BE READ IN CONJUNCTION WITH ALL RELEVANT DESIGNER, ENGINEER OR SPECIALIST DRAWINGS AND SPECIFICATIONS.
3. THE CONTRACTOR MUST CHECK ALL DIMENSION AT SITE BEFORE COMMENCING WORK.
4. THE CONTRACTOR IS RESPONSIBLE FOR PROVIDING ALL NECESSARY TEMPORARY SUPPORT TO THE BUILDING AND ANY ADJACENT STRUCTURES.

REV. NO.	DESCRIPTION	DATE	BY

PROJECT:

TITLE:
HOT WATER CALCULATION AND DATA SHEETS

PROJ. NO.	PROJ. ENGR.	SCALE @ 24X36:
		NTS

DRAWING NO.	REV.
P 3 . 0 1	

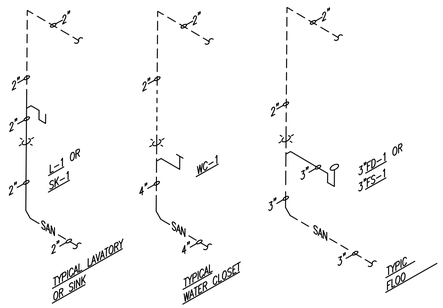

1 **TYPICAL WASTE AND VENT RISERS**
SCALE: NONE

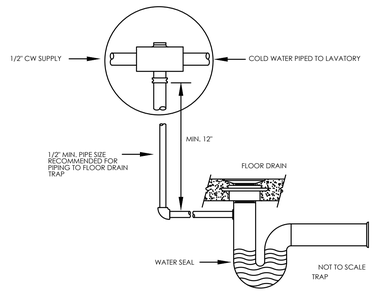

2 TRAP PRIMER

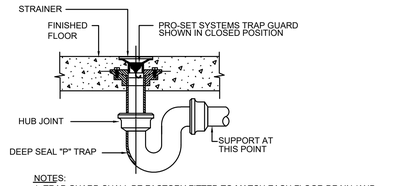

NOTES:
1. TRAP GUARD SHALL BE FACTORY FITTED TO MATCH EACH FLOOR DRAIN (AND FLOOR SINK) BY SIZE, MODEL, AND MANUFACTURER.
2. FLOOR SINK/HUB DRAIN TRAP GUARD INSTALLATION IS SIMILAR.
3. INSTALLATION OF TRAP GUARD TO BE IN ACCORDANCE WITH MANUFACTURER'S RECOMMENDATIONS.
4. INSERT TRAP GUARD ONLY AFTER FINAL RODDING OF DRAINS. INSTALL TRAP GUARD WITH CLEAR SILICONE CAULK FOR GAS TITE SEAL. FOR DRAIN RODDING AFTER INSTALLATION, INSERT SEWER TAPE THROUGH LIGHTLY GREASED 1-1/2" PVC PIPE TO PROTECT TRAP GUARD.

3 **FLOOR DRAIN WITH TRAP SEAL PROTECTION**
SCALE: NONE

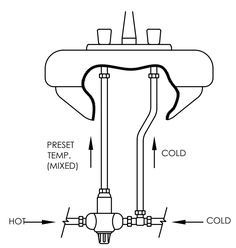

ANTI-SCALD MIXING VALVE
NO SCALE

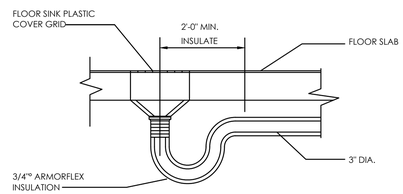

CONTRACTOR TO REFER TO PLUMBING DRAWINGS FOR SIZE AND LOCATION OF SANITARY SEWER LINE.

NOTE:
G.C. TO INSULATE ANY DRAIN OR P-TRAP UNDER SLAB THAT NORMALLY HOLDS WATER

FLOOR SINK DETAIL
NO SCALE

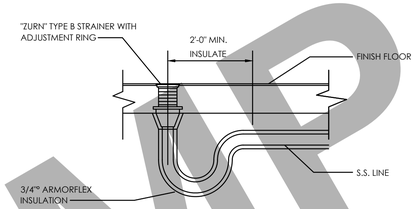

CONTRACTOR TO REFER TO PLUMBING DRAWINGS FOR SIZE AND LOCATION OF SANITARY SEWER LINE.

NOTE:
G.C. TO INSULATE ANY DRAIN OR P-TRAP UNDER SLAB THAT NORMALLY HOLDS WATER

FLOOR DRAIN DETAIL
NO SCALE

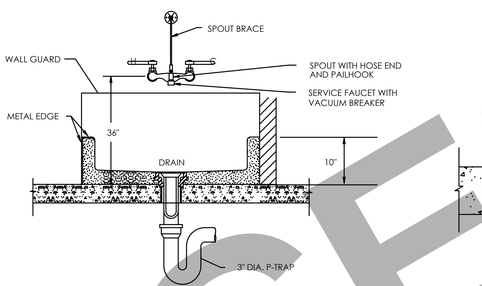

MOP SINK DETAIL
NO SCALE

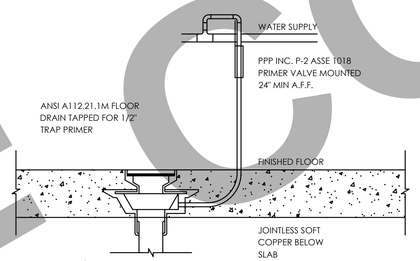

TRAP PRIMER DETAIL
NO SCALE

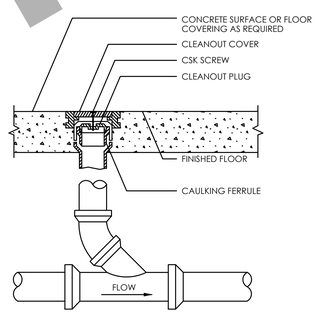

FLOOR CLEANOUT DETAIL
NO SCALE

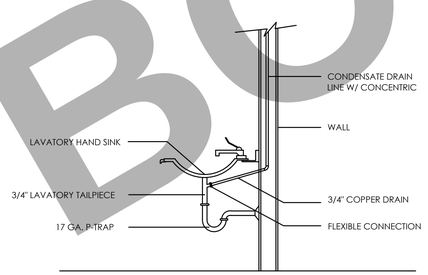

CONDENSATE DETAIL
NO SCALE

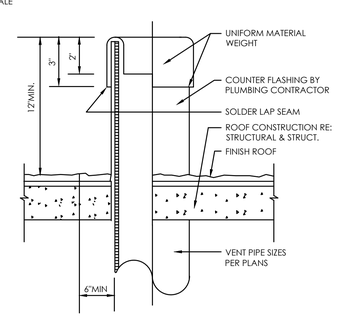

VENT THRU ROOF DETAIL
NO SCALE

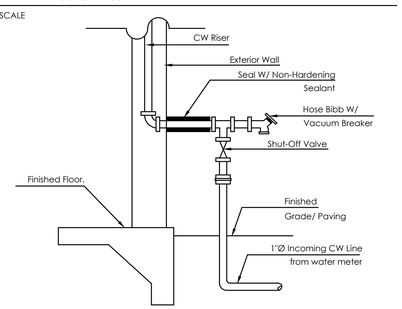

WATER ENTRY DETAIL
NO SCALE

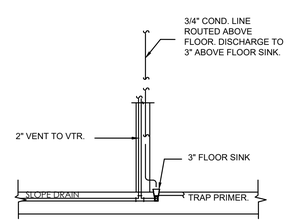

COND. ON FLOOR SINK DETAIL
NO SCALE

BCE COMPANY

CLIENT:

ADDRESS:

CONFIDENTIALITY STATEMENT:

ALL DRAWINGS AND WRITTEN MATERIALS APPEARING HEREIN CONSTITUTE THE ORIGINAL AND UNPUBLISHED WORK OF THE DESIGNER AND THE SAME MAY NOT BE DUPLICATED, USED OR DISCLOSED WITHOUT CONSENT OF THE DESIGNER.

NOTES:

1. ALL DIMENSIONS HEREIN ARE IN IMPERIAL UNITS UNLESS STATED OTHERWISE.
2. THESE DRAWINGS ARE TO BE READ IN CONJUNCTION WITH ALL RELEVANT DESIGNER, ENGINEER OR SPECIALIST DRAWINGS AND SPECIFICATIONS.
3. THE CONTRACTOR MUST CHECK ALL DIMENSION AT SITE BEFORE COMMENCING WORK.
4. THE CONTRACTOR IS RESPONSIBLE FOR PROVIDING ALL NECESSARY TEMPORARY SUPPORT TO THE BUILDING AND ANY ADJACENT STRUCTURES.

REV. NO.	DESCRIPTION	DATE	BY

PROJECT:

TITLE:
PLUMBING GENERAL DETAILS

PROJ. NO.	PROJ. ENGR.	SCALE @ 24X36:
		NTS

DRAWING NO.
P 3 . 0 2

REV.

GENERAL NOTES

A. ALL EXISTING COMPONENTS OF THIS ELECTRICAL DIAGRAM ARE TO REMAIN AS INSTALLED AND ARE SHOWN FOR REFERENCE ONLY.
B. ALL WORK SHALL CONFORM TO THE LATEST EDITION OF THE NATIONAL FIRE PROTECTION
C. ASSOCIATION (NFPA) 70, NATIONAL ELECTRICAL CODE. ALL ITEMS ARE ON AN OR EQUAL BASIS.
D. ALL SINGLE PHASE BRANCH CIRCUITS (RECEPTACLES, LIGHTING, ETC.; ARE 1/2" CONDUIT OR EMT WITH THIN, 90C WIRING, UNLESS NOTED OTHERWISE. ALL OTHER CONDUIT AND WIRING SHALL BE AS INDICATED ON THE PLANS. ACTUAL ROUTING AND HOME RUN GROUPINGS ARE TO BE DETERMINED IN THE FIELD.
E. ELECTRICAL DRAWINGS ARE DIAGRAMMATIC EXCEPT FOR DETAILS AND ELEVATIONS. DO NOT SCALE FROM DIAGRAMMATIC DRAWINGS. EXACT LOCATIONS OF DEVICES AND PANELS ARE TO BE DETERMINED AND ROUGHED-IN DURING CONSTRUCTION TO AVOID INTERFERENCE, TO MEET USER REQUIREMENTS, TO PROVIDE ADEQUATE MOUNTING, AND TO MEET NEC LINEAR ACCESS AND CLEARANCE REQUIREMENTS.
F. BACK TO BACK MOUNTING OF RECEPTACLES IS NOT PERMITTED.
G. IN ADDITION TO THE NEC REQUIREMENTS FOR GFCI PROTECTION FOR RECEPTACLES, THE FOLLOWING RECEPTACLES SHALL ALSO HAVE GFCI PROTECTION: (1)-ALL RECEPTACLES LOCATED WITHIN 8 FEET OF A SINK, (2)-ALL RECEPTACLES WHICH ARE PROVIDED FOR CONVENIENCE IN SERVICING HVAC EQUIPMENT REGARDLESS OF LOCATION.AS REQUIRED TO ACCOMMODATE CONDUCTOR PULLING EASE, FIELD LIFE SAFETY.
H. PROVIDE A LAMICOID NAMEPLATE (WHITE LETTERS ON BLACK BACKGROUND; ON EACH PANELBOARD, MOTOR STARTER,CONTACTOR, TRANSFORMER, ETC. LETTERS SHALL BE 0.75 INCH MAINIMUM.
I. CONTRACTOR SHALL CUT AS REQUIRED TO INSTALL ELECTRICAL EQUIPMENT REPAIR OF FLOOR OR WALLS SHALL BE COORDINATED WITH GENERAL CONTRACTOR CONTRACTOR SHALL ALSO REPAIR ALL OPENINGS LEFT DUE TO EQUIPMENT REMOVAL.
J. CONDUCTORS ARE COPPER UNLESS OTHERWISE SHOWN. ALL CONDUCTORS LARGER THAN #10 SHALL BE STRANDED.
K. PANELBOARDS SHALL CONTAIN A TYPEWRITTEN DIRECTORY WITH A PLASTIC COVER AFFIXED TO THE INSIDE DOOR.

L. ALL FIXTURES, DEVICES, CONDUIT, AND EQUIPMENT SHALL BE SECURED WITH APPROVED HANGERS AND ANCHORS AND IN ACCORDANCE WITH APPROVED STANDARDS OF INSTALLATION.
M. ALL BREAKERS SHOWN IN THE PANELBOARD SCHEDULE SHALL BE RATED AS SHOWN FOR BOTH CIRCUIT CAPACITY AND FAULT CURRENT INTERRUPTING CAPACITY.
N. ALL PANELBOARDS, DISCONNECT SWITCHES, MOTOR STARTERS, AND CONTACTORS SHALL BE NEMA 1, UNLESS OTHERWISE NOTED.
O. ELECTRICAL CONTRACTOR MUST BE AVAILABLE AT TIME OF DBS INSPECTION. COORDINATE WITH GENERAL CONTRACTON.
P. FIELD VERIFY THE AVAILABLE FAULT CURRENT AT THE LANDLORD'S EXISTING PANEL AND PROVIDE A NEW, FULLY RATED, PANEL TO MATCH EXISTING.
Q. CONTRACTOR TO MAKE FINAL CONNECTIONS IN EMS PANEL FOR LANDLORD PROVIDED LIGHTING CIRCUITS. 50% OF THE GENERAL LIGHTING CIRCUITS SHOULD BE ROUTED THROUGH THE CUSTOMER CONTROL ZONE .

GENERAL ELECTRICAL NOTES

#	DESCRIPTION
1	GENERAL CONTRACTOR SHALL VERIFY FIELD CONDITIONS BEFORE SUBMITTING BID.
2	ALL WORK SHALL BE DONE IN ACCORDANCE WITH 2019 CALIFORNIA BUILDING CODE 2019 GREEN BUILDING CODE AND 2020 MILPITAS MUNICIPAL CODE".
3	GENERAL CONTRACTOR SHALL OBTAIN AND PAY FOR ALL PERMITS, CERTIFICATES, ETC. REQUIRED.
4	GENERAL CONTRACTOR SHALL OBTAIN AND PAY FOR BOTH ROUGH AND FINAL UNDER-WRITERS OR OTHER APPROVED INSPECTION AGENCY CERTIFICATES "ELECTRICAL INSPECTION". THESE CERTIFICATES SHALL BE PRESENTED WITH REQUEST FOR FINAL PAYMENT.
5	IT IS THE INTENT OF THESE PLANS TO PROVIDE A COMPLETE OPERATING ELECTRICAL SYSTEM. THIS CONTRACTOR SHALL FURNISH AND INSTALL ALL WIRING, EQUIPMENT, MATERIAL. ETC. REQUIRED, EXCEPT WHERE SPECIFICALLY NOTED AS BEING FURNISHED BY OTHERS. SHOULD THERE BE ANY QUESTIONS CONCERNING RESPONSIBILITY, THEY SHALL BE ADDRESSED TO ARCHITECT PRIOR TO BID. NO EXTRA CHARGES WILL BE ALLOWED.
6	ELECTRICAL SERVICE SHALL BE COORDINATED WITH THE EXISTING FIELD CONDITIONS.
7	CONTRACTOR SHALL MAKE ALL FINAL CONNECTIONS TO ALL CONTROLS, OWNER-SUPPLIED EQUIPMENT, MECHANICAL AND PLUMBING EQUIPMENT AS REQUIRED.
8	REFER TO ARCHITECTURAL DRAWINGS FOR ELEVATION DETAILS. ALL FIXTURE AND DEVICE LOCATIONS SHOWN ON ARCHITECTURAL DRAWINGS SUPERSEDE THOSE SHOWN ON ELECTRICAL PLANS.
9	CIRCUIT NUMBER ON THE DRAWINGS SHALL BE AS PER APPROVED PLANS
10	BRANCH CIRCUIT CONDUCTOR INSULATION SHALL BE COLOR CODED AND SHALL BE 600 VOLT. TYPE THHN/THWN.
11	CABLES IN HIGH TEMPERATURE AREAS SHALL HAVE INSULATION TYPE SUITABLE FOR THE TEMPERATURE. CABLES USED IN SPACES FOR ENVIRONMENTAL AIR SHALL CONFORM WITH APPLICABLE C.E.C REQUIREMENTS.
12	ALL WIRING USED IN RETURN OR DISCHARGE AIR PLENUMS SHALL BE PLENUM RATED OR INSTALLED PER METHODS APPROVED BY THE LATEST EDITION OF THE C.E.C. FOR SUCH APPLICATION.
13	ALL WIRE AND CABLE CONDUCTORS SHALL BE COPPER WITH INSULATION RATED 600V. CONDUCTORS SIZED #10 AWG AND SMALLER SHALL BE SOLID OD STRANDED, AND CONDUCTORS SIZED LARGER THAN #10 AWG SHALL BE STRANDED WIRE.
14	BRANCH CIRCUITS FOR POWER AND LIGHTING SHALL NOT BE LESS THAN #12 AWG. OR AS NOTED. WIRES ARE TO BE SIZED FOR THE APPROPRIATE VOLTAGE DROPS. SEE WIRE SIZE SCHEDULE ON THIS SHEET.
15	ALL DATA CABLES SHALL BE CAT6, PLENUM RATED. TO BE PROVIDED BY OWNER SELECTED VENDOR. ELECTRICAL WORK SHALL BE TO PROVIDE OUTLET BOXES AND "RING AND STRING" FOR PULLING OF CABLES IN CONCEALED SPACES.
16	CONTROL WIRING SHALL NOT BE LESS THAN #14 AWG UNLESS OTHERWISE NOTED.
17	HOMERUNS SHOWN ARE SCHEMATIC. CONTRACTOR MAY ORIGINATE HOMERUNS FROM DIFFERENT LOCATIONS. ALL WIRE INCLUDING HOMERUNS SHALL BE DELINEATED ON AS-BUILT DRAWINGS.
18	ALL WIRING INSTALLED UNDER THIS CONTRACT SHALL BE TESTED FOR PROPER CONNECTIONS AND SHORT CIRCUITS PRIOR TO THE TURNING OVER OF WORK AS A COMPLETE UNIT.
19	PROVIDE ALL ELECTRICAL SYSTEM GROUNDING IN ACCORDANCE WITH C.E.C. REQUIREMENTS EVEN IF IT IS NOT SHOWN ON THE DRAWINGS. INCLUDE ADDITIONAL GROUNDING CONDUCTORS IN ALL RACEWAYS EVEN THOUGH THE DRAWINGS SHOW ONLY CIRCUIT AND/OR NEUTRALS CONDUCTORS. THE PLUMBING AND PIPING SYSTEM SHALL NOT BE USED AS A GROUND. ALL TRANSFORMER NEUTRALS SHALL BE GROUNDED TO BUILDING STEEL IN ACCORDANCE WITH NEC 250-70.
20	ALL CONDUITS PASSING THROUGH PARTITIONS ARE TO BE APPROPRIATELY SLEEVED AND SEALED.
21	FURNISH AND INSTALL ALL CONDUIT WITH PULL WIRES AS REQUIRED. ALL OUTLET BOXES SHALL BE STEEL, EXTRA DEEP WITH GROUNDING PIGTAILS. GROUNDING PUSH-CLIPS ARE NOT ACCEPTABLE.
22	ALL PENETRATIONS SHALL BE INSTALLED AND SEALED PER NATIONAL STATE AND LOCAL CODES
23	DO NOT MAKE ANY CHANGES OR SUBSTITUTIONS WITHOUT SPECIFIC WRITTEN APPROVAL FROM THE ARCHITECT OR ENGINEER.
24	GUARANTEE ALL WORK, MATERIAL AND EQUIPMENT FOR A PERIOD OF ONE YEAR FROM THE DATE OF APPROVAL AND FINAL ACCEPTANCE.
25	THIS DESIGN IS BASED ON INITIAL DESIGN DATA. GENERAL CONTRACTOR TO SUPPLY AND INSTALL FEEDERS, FUSES AND CIRCUIT BREAKERS TO MATCH THE NAMEPLATE RATING OF ALL EQUIPMENT. THIS SHALL BE INCLUDED IN THE INITIAL BID PROPOSAL AND NO EXTRAS SHALL BE ENTERTAINED.
26	Service equipment in other than dwelling units shall be legibly marked in the field with the maximum available fault current. The field markings shall include the date the fault current calculation was performed and be of sufficient durability to withstand the environment involv ed. CEC 110.24(A).

GENERAL ELECTRICAL NOTES

#	DESCRIPTION
27	LABEL ALL JUNCTION BOXES, OUTLETS, LIGHT SWITCH, ETC. WITH CIRCUIT NUMBER ON INTERIOR ON COVER PLATE. USE SELF-ADHESIVE "DYMO" LABEL 1/8" HIGH LETTERS.
28	GENERAL CONTRACTOR SHALL PROVIDE SEISMIC RESTRAINTS AND SUPPORTS FOR ALL FLOOR, WALL, AND CEILING MOUNTED ELECTRICAL EQUIPMENT TO RESIST EARTHQUAKE EFFECTS DETERMINED IN ACCORDANCE WITH THE BUILDING CODE.
29	THE G.C. SHALL PROVIDE ALL EQUIPMENT. MATERIALS AND LABOR TO COMPLETE ALL ELECTRICAL WORK IN A NEAT AND WORKMANLIKE MANNER AND IN ACCORDANCE WITH GOOD COMMERCIAL PRACTICE INCLUDING THE INSTALLATION OF ALL THE EQUIPMENT MATERIALS AND SYSTEMS AND THE FINAL CONNECTIONS TO THE OWNER'S EQUIPMENT AND FIXTURES AS REQUIRED BY THE OWNER. THE G.C. SHALL ALSO FURNISH TEMPORARY WIRING AND LIGHTING TO PROVIDE A MINIMUM OF 25 FC IN WORK AREAS FOR USE OF ALL THE TRADES DURING CONSTRUCTION AND THE INSTALLATION OF THE OWNERS FIXTURES. THE G.C. IS RESPONSIBLE TO REMOVE ALL TEMPORARY WIRING UPON COMPLETION OF CONSTRUCTION OF ALL TRADES.
30	THIS CONTRACTOR SHALL BE RESPONSIBLE TO PROVIDE AND INSTALL ALL SUPPLEMENTARY SUPPORT, INCLUDING SUPPORT STEEL AS REQUIRED TO HANG ALL EQUIPMENT AND LIGHTING FROM THE EXISTING STRUCTURE IN ACCORDANCE WITH THE ARCHITECTURAL/STRUCTURAL SUPPORT AND LOADING CRITERIA.
31	IT IS THE RESPONSIBILITY OF THIS CONTRACTOR TO PROVIDE FULLY DIMENSIONED COORDINATION DRAWINGS FOR ALL OF HIS RESPECTIVE WORK. THESE DRAWINGS MUST BE FULLY COORDINATED WITH ALL EXISTING CONDITIONS. ALL HVAC, PLUMBING, FIRE PROTECTION, ELECTRICAL, LIGHTING, STRUCTURAL AND ARCHITECTURAL SYSTEMS PRIOR TO PREPARING COMPOSITE MULTI DISCIPLINE COORDINATION DRAWINGS.
32	ALL DISCONNECTING MEANS AND EQUIPMENT INDICATED ON THE DRAWING SHALL BE IDENTIFIED BY NAMEPLATE IN COMPLIANCE WITH CALIFORNIA ELECTRICAL CODE
33	ALL WIRING FOR THE EMERGENCY LIGHTING AND EMERGENCY SYSTEMS SHALL BE INSTALLED IN ACCORDANCE WITH THE REQUIREMENTS OF THE CALIFORNIA ELECTRICAL CODE
34	THE WIRING METHODS AND MATERIALS INDICATED IN THE SPECIFICATIONS AND ON THE DRAWINGS SHALL BE INSTALLED AND CONNECTED IN ACCORDANCE WITH THE REQUIREMENTS OF CALIFORNIA ELECTRICAL CODE
35	THE ELECTRICAL SERVICE AND DISTRIBUTION SYSTEM AS INDICATED ON THE RISER DIAGRAM AND MATERIALS INDICATED IN THE SPECIFICATIONS SHALL BE IN COMPLIANCE WITH THE REQUIREMENTS OF CALIFORNIA ELECTRICAL CODE
36	ALL OVER CURRENT PROTECTION SHALL BE IN COMPLIANCE WITH THE CALIFORNIA ELECTRICAL CODE
37	ALL GROUNDING REQUIREMENTS OF THE COMPLETE ELECTRICAL DISTRIBUTION SYSTEM AND AS INDICATED IN THE SPECIFICATIONS SHALL BE IN ACCORDANCE WITH CALIFORNIA ELECTRICAL CODE
38	PRIOR TO ANY REQUIRED CUTTING AND PATCHING OF CONCRETE FLOOR AND/OR CUTTING OF ROOF, CONTRACTOR SHALL COORDINATE WITH BUILDING ENGINEER.
39	FOR ALL LIGHTING FIXTURES MOUNTED IN HUNG CEILING THE GENERAL CONTRACTOR SHALL PROVIDE AND INSTALL INDIVIDUAL SUPPORT AT EACH CORNER OF RECESSED LIGHTING TROFFER CONNECTED TO BUILDING STEEL ABOVE ALL CONDUIT AND MC CABLE MOUNTED ABOVE HUNG CEILING SHALL BE INDIVIDUALLY SUPPORTED IN THE SAME FASHION AS PER CEC REQUIREMENTS.
40	
41	DO NOT SCALE FROM THESE DRAWINGS.
42	PLANS ARE PREPARED WITH REQUIRED BRANCH CIRCUITS INDICATED BY CIRCUITS NUMBERS. PROVIDE AND INSTALL ALL CONDUITS. CONDUCTORS, BOXES, MISCELLANEOUS FITTINGS, ETC. FOR A COMPLETE AND OPERABLE SYSTEM (HOME RUN SHOWN). BRANCH CIRCUIT INSTALLATION SHALL COMPLY WITH SPECIFICATIONS AND C.E.C.
43	ELECTRICAL RECEPTACLE, SWITCH AND CONTROL HEIGHTS (CBC11B-308:) RECEPTACLE HEIGHTS: ELECTRICAL RECEPTACLE OUTLETS ON BRANCH CIRCUITS OF 30 AMPERES OR LESS AND COMMUNICATION SYSTEM RECEPTACLES SHALL BE LOCATED NO MORE THAN 48 INCHES (1219MM) MEASURED FROM THE TOP OF THE RECEPTACLE OUTLET BOX OR RECEPTACLE HOUSING NOR LESS THAN 15 INCHES (381MM) MEASURED FROM THE BOTTOM OF THE RECEPTACLE OUTLET BOX OR RECEPTACLE HOUSING TO THE LEVEL OF FINISHED FLOOR OR WORKING FLATFORM. IF THE REACH IS OVER AN OBSTRUCTION (FOR EXAMPLE, A KITCHEN BASE CABINET) BETWEEN 20 AND 25 INCHES (508 AND 635MM) IN DEPTH, THE MAXIMUM HEIGHT MEASURED AT THE BOX IS REDUCED TO 44 INCHES (1118MM) FOR FORWARD APPROACH, OR 46 INCHES (1168MM) FOR SIDE APPROACH, PROVIDED THE OBSTRUCTION IS NO MORE THAN 24 INCHES (610MM) IN DEPTH. OBSTRUCTION SHALL NOT EXCEED MORE THAN 25 INCHES (635MM) FROM THE WALL BENEATH THE RECEPTACLE.
44	SWITCH AND CONTROL HEIGHTS: (CBC11B-308:) CONTROL OR SWITCHES INTENDED TO BE USED BY THE OCCUPANT OF THE ROOM OR AREA TO CONTROL LIGHTING AND RECEPTACLE OUTLETS, APPLIANCES, ALARMS OR COOLING, HEATING AND VENTILATING EQUIPMENT SHALL BE LOCATED NO MORE THAN 48 INCHES (1219MM) MEASURED FROM THE TOP OF THE OUTLET BOX NOR LESS THAN 15 INCHES (381MM) MEASURED FROM THE BOTTOM OF THE OUTLET BOX TO THE LEVEL OF THE FINISHED FLOOR OR WORKING PLATFORM. IF THE REACH IS OVER A PHYSICAL BARRIER OR AN OBSTRUCTION (FOR EXAMPLE, A KITCHEN BASE CABINET) BETWEEN 20 AND 25 INCHES (508 AND 635MM) IN DEPTH, THE MAXIMUM HEIGHT IS REDUCED TO 44 INCHES (1118MM) FOR FORWARD APPROACH, OR 46 INCHES (1168MM) FOR SIDE APPROACH, PROVIDED THE OBSTRUCTION IS NO MORE THAN 24 INCHES (610MM) IN DEPTH. PHYSICAL BARRIERS OR OBSTRUCTIONS SHALL NOT EXTEND MORE THAN 25 INCHES (635MM) FROM THE WALL BENEATH A CONTROL.

ELECTRICAL LEGEND

- LED CHANDELIER SIMILAR TO JYL7203A - 34 WATTS
- LED PENDANT SIMILAR TO BRAND: JONATHAN Y, PART NUMBER: JYL7018A - 18.5 WATTS
- LED RECESSED SIMILAR TO BRAND: ZZENRYSAM PART NUMBER KOK-5005 - 15 WATTS
- LED SCONCE WALL MOUNTED SIMILAR TO BRAND: JONATHAN Y, PART NUMBER: JYL7022B - 10 WATTS
- LED LIGHT STRIP - 3 WATTS PER FEET
- JUNCTION BOX FOR EXHAUST FANS
- DIMMER
- OCCUPANCY SENSOR
- ONE WAY LIGHTING SWITCH
- TWO WAYS LIGHTING SWITCH
- EMERGENCY LIGHTING WALL MOUNTED WITH INTERNAL BACK UP BATTERY WITH MINIMUM 90 MINS AUTONOMY
- EXIT SIGN WALL MOUNTED WITH INTERNAL BACK UP BATTERY WITH MINIMUM 90 MINS AUTONOMY
- EXIT SIGN CEILING MOUNTED WITH INTERNAL BACK UP BATTERY WITH MINIMUM 90 MINS AUTONOMY
- SELF CONTAINED SMOKE/CARBON MONOXIDE (120 W/BATTERY BACKUP) - CEILING MOUNTED
- DUPLEX RECEPTACLE - WALL MOUNTED @ +18" AFF UNLESS NOTED GFCI DENOTES: GROUND FAULT PROTECTION
- DUPLEX RECEPTACLE - FLOOR MOUNTED IG DENOTES: IG TYPE
- QUADRIPLEX RECEPTACLE - WALL MOUNTED @ +18" AFF UNLESS NOTED GFCI DENOTES: GROUND FAULT PROTECTION
- NON-FUSED DISCONNECT SWITCH - SIZE AS INDICATED
- DAYLIGHT SENSOR TO CONTROL LUMINARIES IN DAYLIGHT ZONE
- FLOOR DATA OUTLET WITH CATS CONNECTION
- WALL MOUNTED ELECTRIC JUNCTION BOX
- WALL MOUNTED THERMOSTAT

WIRE SCHEDULE AND NOTES

LOAD PER PH (KVA)	WIRE SIZE (AWG)	MAXIMUM LENGTH OF BRANCH CIRCUIT PER UTILIZATION VOLTAGE (120, 1PH, MAX V.D. 3%)	(240, 1PH, MAX V.D. 3%)	(240, 3PH, MAX V.D. 3%)	NOTES AND REMARKS
< 1.92	#12	56 FT	85 FT	98 FT	5
	#10	94 FT	141 FT	163 FT	5
	#8	144 FT	217 FT	250 FT	5
	#6	230 FT	345 FT	398 FT	5
< 1.44	#12	75 FT	113 FT	130 FT	5
	#10	125 FT	188 FT	217 FT	5
	#8	192 FT	289 FT	334 FT	5
	#6	306 FT	460 FT	531 FT	5
< 1.26	#12	86 FT	129 FT	149 FT	
	#10	143 FT	215 FT	248 FT	
	#8	220 FT	330 FT	381 FT	
< 1.08	#12	100 FT	150 FT	173 FT	
	#10	167 FT	250 FT	289 FT	
	#8	256 FT	385 FT	445 FT	
< 0.9	#12	120 FT	180 FT	240 FT	
	#10	200 FT	300 FT	347 FT	
<0.72	#12	150 FT	225 FT	260 FT	
	#10	250 FT	376 FT	434 FT	

#	NOTES
1	CONTRACTOR SHALL REFER TO THIS TABLE PRIOR TO START OF BRANCH CIRCUIT ROUGH-IN.
2	CONTRACTOR SHALL USE THE APPROPRIATE WIRE SIZE IN CONJUNCTION WITH THE LENGTH OF THE PROPOSED FIELD VERIFIED ROUTING OF BRANCH CIRCUIT WIRING (INCLUDING VERTICAL & LATERAL RUN, ROUTED PARALLEL/PERPENDICULAR TO THE BUILDING STRUCTURE).
3	SEE PANEL SCHEDULE FOR THE CORRESPONDING KVA LOAD PER PHASE OF A PARTICULAR BRANCH CIRCUIT.
4	RESISTANCE VALUES USED ARE FOR UNCOATED COPPER WIRES IN STEEL CONDUIT. 75 DEGREE C., OPERATING AT 60HZ.
5	THE VALUES IN "120V, 1PH" COLUMN IS TO BE USED FOR GENERAL PURPOSE RECEPTACLE LOADS.

ABBREVIATIONS AND TAGS

ABB.	DESCRIPTION	ABB.	DESCRIPTION
EWH	ELECTRIC WATER HEATER	SD	SMOKE DETECTOR
(E)	EXISTING TO REMAIN	TEL	TELEPHONE
EC	ELECTRICAL CONTRACTOR	TX	TRANSFORMER
FA	FIRE ALARM	TV	TELEVISION
FMT	FLEXIBLE METALLIC TUBING	UAC	UNDER ANOTHER CONTRACT
GC	GENERAL CONTRACTOR	UAS	UNDER ANOTHER SECTION
GFCI	GROUND FAULT INTERUPTER	UON	UNLESS OTHERWISE NOTED
IG	ISOLATED GROUND	V.D.	VOLTAGE DROP
LL	LANDLORD	W	WIRE
LV	LOW VOLTAGE	WP	WEATHERPROOF
AC 1	MECHANICAL UNIT TAG. SEE MECHANICAL DRAWINGS FOR ADDITIONAL DESCRIPTION.	E-4 4	DETAIL TAG. REFER TO DETAIL 4 ON SHEET NUMBER E-4.

CLIENT:

ADDRESS:

CONFIDENTIALITY STATEMENT:

ALL DRAWINGS AND WRITTEN MATERIALS APPEARING HEREIN CONSTITUTE THE ORIGINAL AND UNPUBLISHED WORK OF THE DESIGNER AND THE SAME MAY NOT BE DUPLICATED, USED OR DISCLOSED WITHOUT CONSENT OF THE DESIGNER.

NOTES:

1. ALL DIMENSIONS HEREIN ARE IN IMPERIAL UNITS UNLESS STATED OTHERWISE.
2. THESE DRAWINGS ARE TO BE READ IN CONJUNCTION WITH ALL RELEVANT DESIGNER, ENGINEER OR SPECIALIST DRAWINGS AND SPECIFICATIONS.
3. THE CONTRACTOR MUST CHECK ALL DIMENSION AT SITE BEFORE COMMENCING WORK.
4. THE CONTRACTOR IS RESPONSIBLE FOR PROVIDING ALL NECESSARY TEMPORARY SUPPORT TO THE BUILDING AND ANY ADJACENT STRUCTURES.

REV. NO.	DESCRIPTION	DATE	BY
01	CITY COMMENTS	4/23	A.B

PROJECT:

TITLE: **GENERAL NOTES AND ABBREVIATIONS**

PROJ. NO.	PROJ. ENGR.	SCALE @ 24X36: NTS

DRAWING NO. E0-00

REV.

BCE PLAN

ELECTRICAL SPECIFICATIONS

PART 1	GENERAL
1.01	SCOPE OF WORK: Furnish and Install all materials and equipment and provide all labor, tools, transportation, superintendence and services required and necessary to complete the work shown on the drawings and/or specified herein. Also include all other work and miscellaneous items, not specifically mentioned, but reasonably inferred for a complete installation including all accessories and appurtenances required for testing the system. It is the intent of the drawings and specifications that all systems be complete, and ready for operation.
1.02	REGULATORY REQUIREMENTS: Code compliance is mandatory. Nothing in these Drawings and Specification spermits work not conforming to these codes. Where work is shown to exceed minimum code requirements, comply with drawings and specifications. All work and materials shall comply with the latest rules, codes and regulations, including, but not limited to the following: 1. Occupational Safety and Health Act Standards (OSHA). 2. NFPA #70: National Electric Code (NEC), 3. NFPA #101: Life Safety Code. 4. State Fire Marshal. 5. Local Utilities Companies.
1.03	LICENSE, FEES AND PERMITS: Electrical contractor shall pay for all licenses, permits and inspection fees required by the authority having jurisdiction and shall arrange for all required inspections.
1.04	SAFETY AND INDEMNITY: The Contractor shall be solely and completely responsible for conditions of the job site, including safety of all persons and property during performance of work. This requirement will apply continuously and not be limited to normal working hours. No act, service, drawing review or construction review by the Owner, the Engineers or their Consultants, is intended to include review of the adequacy of the Contractor's safety measures, in, on, or near the construction site.
1.05	DRAWINGS AND SPECIFICATIONS: All drawings and all Divisions of these specifications shall be considered as a whole and work of this Division shown anywhere therein shall be furnished under this Division. Drawings are diagrammatic and indicate the general arrangement of equipment and wiring. Most direct routing of conduits and wiring is not assured. Exact requirements shall be governed by conditions of the job. Consult all other drawings in preparation of the bid. Extra lengths of wiring or addition of pull or junction boxes, etc., necessitate by such conditions shall be included in the bid.
1.06	CONDITIONS AT SITE: The electrical contractor shall have examined the site and familiarized themselves with all discernible existing conditions. No extra payment will be allowed for work required because of these conditions, whether specifically mentioned or not.
1.07	WORKMANSHIP AND CONTRACTOR'S QUALIFICATIONS: Only quality workmanship will be accepted. Haphazard or poor installation will be cause for rejection of work.
1.08	SHOP DRAWINGS AND MATERIALS LISTS: Submit to Owner in a single package six (6) copies of complete shop drawings and materials list, as noted below, for review within fifteen (15) days after award of contract. Submittals required as follows: 1. Wiring devices: switches, receptacles, device plates. 2. Enclosures for utility company metering. 3. Main fused disconnect switch. 4. Panelboards. 5. Disconnect switches. 6. Lighting fixtures, lamps and lighting control equipment.
1.09	SUBSTITUTIONS: One or more makes of materials or methods may have been specified to establish the standard of quality, workmanship, finish and design required, but other materials or methods equal in quality, workmanship, finish, design, and guaranteed performance, will be accepted. However, all changes and substitutions shall be requested in letter form and shall be accompanied with a statement of the amount of money to be returned to the contract if the substitution is permitted. No work involving materials submitted for substitution shall proceed until written acceptance is received from the Owner. The Owner is the sole judge of acceptability of preferred substitutions. If a substitution item is permitted, and any re-design effort is thereby necessitated, the required redesign shall be at the Contractor's expense.
1.10	COORDINATION: Coordinate work with other trades to avoid conflict and to provide correct rough-in and connection for equipment furnished under other trades that require electrical connections. Inform Contractors of other trades of the required access to and clearances around electrical equipment to maintain service ability and code compliance. Verify equipment dimensions and requirements with provisions specified under this Section. Check actual job conditions before fabricating work. Report necessary changes in time to prevent needless work. Changes or additions, subject to additional compensation, which are made without written authorization and an agreed price, shall be at the Contractor's risk and expense.
1.11	CUTTING AND PATCHING: All cutting and patching required for work of this Division is included herein. Coordination with General Contractor and other trades is imperative. Contractor shall bear the responsibility for and the added expense of adjusting for improper holes, supports, etc.
1.12	ACCEPTANCE DEMONSTRATION: Upon completion of the work, at a time to be designated by the Owner, the Contractor shall demonstrate for the Owner the operation of the electrical installation including any and all special items installed by him or installed under his supervision. Properly set automatic time switches to perform switching operations in accordance with schedules provided by the Owner's representative, and demonstrate (using the manufacturer's operating instructions) how to override and/or test time switches programming.
1.13	RECORD DRAWINGS, EQUIPMENT DATA: Maintain one set of clean working drawings at the job site and enter daily such "as-built" information as feeder and service routes, pull box locations and changes in layout or arrangement which occur during construction. Deliver completed drawings to the Owner. Deliver to the Owner's representative three copies of data sheets or other current manufacturers' publications for each item of electrical equipment furnished for the project including at least these data: 1. Technical description and replaceable parts list. 2. Physical description and installation instructions. 3. Main fused disconnect switch. 4. Manufacturer's Warranty.
1.14	CLEAN-UP: Rid the premises of scrap materials, trash and debris both during construction and at completion of the project. Leave the building and surrounding area in a clean and orderly condition.
1.15	GUARANTEE: Guarantee the installation free from defects of workmanship and materials for a period of one year after Date of Certification of final payment and promptly remedy any defects developing during this period, without charge.
1.16	TEMPORARY SERVICES: Provide adequate and safe temporary electrical power and lighting throughout the construction and finishing of the premises. In addition to special or unusual requirements, provide at least these items: 1. Three 20-amp circuits for construction power tools. Provide GFI temporary circuits with coverplates to meet OSHA requirements. 2. Three or more light strings suspended approximately one foot below the height of finish ceiling with lamps spaced not more than twelve feet on centers. Strings shall be run the length of the store space parallel to the demising walls, with one string within eight feet of each wall and one (or more) intermediate string(s) arranged to limit the spacing between rows to sixteen feet or less. 3. Flood lighting and task lighting for painting and other finish work. When permanent electrical service is operable, disconnect and remove from the premises the materials and equipment used for temporary power and lighting, and restore modifications and repair damage caused by the installation, use or removal of temporary service provisions.

PART 2	PRODUCTS
2.01	MATERIAL APPROVAL: All materials must be new and bear Underwriter's Laboratories label. Materials that are not covered by UL testing standards shall be tested and approved by an independent testing laboratory or a governmental agency. Material not in accordance with these specifications may be rejected either before or after installation.
2.02	CONDUITS AND OTHER RACEWAYS: A. Rigid Steel: Hot-dipped galvanized. B. Intermediate Metal Conduit (IMC): Hot-dipped galvanized. C. Electrical Metallic Tubing (EMT): Electro-galvanized. D. Wireway: Code gauge steel, with knockouts and hinged cover, corrosion resistant gray baked enamel finish. E. Provide fittings and accessories approved for the purpose equal in all respects to the conduit or raceway. EMT connectors and couplings shall be steel setscrew type indoors and steel compression type in wet locations and outdoors.
2.03	WIRES AND CABLES: A. For power and lighting system 600V or less: 1. Conductor: minimum size #12 AWG. a. #12 and #10 AWG solid copper. b. #8 AWG and larger shall be stranded copper. 2. Insulation type: a. #12 to #1 AWG: THWN for wet or underground and THHN for dry locations. b. #1/0 through #4/0 AWG: XHHW (55 mils). c. #250 MCM and larger: XHHW (65 mils). d. Grounding wire: TW. B. For signal and communications circuit: 1. Special cables shall be as specified on drawings. 2. Conductors for general use shall be stranded copper conductor, #16 AWG minimum, with THWN insulation for underground or wet locations and THHN insulation for dry locations. C. Acceptable Products: General Electric, Anaconda, Okonite, Paranite or Triangle products conforming or exceeding applicable IPCEA standards.
2.04	OUTLET BOXES, JUNCTION AND PULL BOXES: A. Outlet boxes: 4" square x 1-1/2" deep (or larger) galvanized sheet steel KO-type with plaster ring and cover for general interior use and cast metal type FS or FD with matching screw covers for exterior and exposed interior locations (gasketed in damp or wet locations). B. Junction boxes shall be same as outlet boxes up to 42 cu. in. and codegauge steel in larger sizes with surface or flush-type screw-mounted trim covers, both boxes and covers inhibitor-primed and painted inside out. C. Pull boxes shall be same as junction boxes unless indicated otherwise on the drawings, with covers. D. Telephone outlet boxes shall be the type and size required by the serving telephone company but not smaller than 4-11/16" square x 2-1/8" deep with single-gang ring and Sierra #S-754N split plate bushing.
2.05	WIRING DEVICES AND PLATES: Wiring devices and plates shall be by Pass and Seymour or approved equal. 1. Standard design: a. Switch and receptacles devices shall be plastic bodies, color per architect. b. Wall plates shall be metal type 430, stainless steel, color per architect. c. Isolated ground receptacles shall be white with orange triangle as required per NEC, manufactured by "Leviton" # 5362-IGW or approved equal.
2.06	CONDUIT HANGERS: For individual conduit runs not directly fastened to the structure, use rod hangers manufactured by Caddy, Unistrut or Powerstrut. For multiple conduit runs, use Unistrut or Powerstrut trapeze type conduit support designed for maximum deflection not greater than 1/8".
2.07	WIRE CONNECTORS: For wire sizes #8 AWG and smaller: Insulated pressure type (with live spring) rated 105 degrees C, 600V, for building wiring and 1000V in signs or fixtures. Scotchlok or Ideal. For wire size #6 AWG and larger: T & B or equivalent compression type with 3M #33+ or Plymouth "Slipknot Grey" tape insulation.
2.08	PANELBOARDS: A. Construction: Cabinets shall be of code gauge, galvanized steel, surface or flush mounted as indicated. Doors shall be of cold-rolled steel with concealed hinges and flush catch and lock. All panels shall be keyed alike. Panels located adjacent to each other shall have identically sized enclosure and trims. Minimum panel width shall be 20". Finish exposed part with one coat of primer and one coat of light grey enamel suitable for overpainting in field if desired. B. Bus Bars: Provide ground block with full complement of terminals in addition to insulated neutral bus. Future breaker spaces shall have complete provision including busses and connecting hardware. C. Manufacturers: Panelboards shall be General Electric Type "AQ" or type "AE" or equivalent products of Eaton, Square-D or Siemens-ITE. D. Circuit Breakers: Shall be quick-make, quick-break, molded case type: 1. 120/240 Volt Panels: Shall be General Electric Type "Q" line, bolt-on type, with minimum symmetrical interrupting capacity as shown. 2. Provide multi-pole units with common trip element. 3. Circuit breakers used on "ON-OFF" control of fluorescent lighting (panelboard switching) shall be Underwriters' Laboratories listed and marked "SWD" to indicate their suitability. E. Identification: Provide screwed-on (no adhesives) bakelite or photo-etched metallic nameplate identification on outside of each panel showing panel designation, voltage and phase in minimum 1/8" high letters. Each panel shall contain a metal-framed circuit directory inside cover, with plastic protector. F. Complete shop drawings are required. See Article 1.08.
2.09	INDIVIDUALLY MOUNTED MOTOR CONTROLLERS: A. For Polyphase Motors: Combination motor circuit protector and magnetic starter, with 3-leg overload protection. Provide two interlock contacts of the interchangeable open-close type. Provide hand-off-automatic selector switch, motor running pilot light and reset button in cover. Circuits 300V and over shall be provided with 120V control transformers. B. Starters for fractional horsepower 120V motors shall be manual type unless shown otherwise, equipped with built-in overload protection. C. Acceptable manufacturers: General Electric, Siemens, Square D, Eaton, and Westinghouse.
2.10	LIGHTING: A. Furnish and install all fixtures complete, including lamps and ballast ready for service. B. Supports: Proper supports and mounting accessories, such as hangers, stems, yokes, plaster frames, etc. shall be provided as required by the type of ceiling installed. Where swivel canopies or ball aligners are specified, they shall couse fixture to hang plump regardless of ceiling slope. C. Fixture Designation: Fixture types are designated on drawings. Where only one fixture designation is shown, it applies to all fixtures in that room or area. For exact fixture count and location refer to reflected ceiling plan. D. Wire 1-lamp and 3-lamp fluorescent fixtures in tandem where required by code. E. Ballasts: Advance, GE, or Approved high frequency electronic, full light output, energy saving, Class "P", high power factor, ETL certified, sound rating "A" or as indicated on drawings.
2.11	MISCELLANEOUS MATERIALS: A: Safety Switches: Heavy duty type, 600V, horsepower rated for motors, fused or non-fused as required. Mount in enclosure with NEMA rating as required for the specific application General Electric, Square D or Westinghouse.

PART 2	PRODUCTS
2.12	DRY TYPE TRANSFORMERS: General: Equipment shall conform to or exceed requirements of NEMA, ANSI Standard C89.2 for Dry Type Transformers for General Applications. Acceptable products are those of General Electric Company's "QL," Line or equivalent Square D, Siemens-ITE, or Eaton. Electrical Ratings: 1. Primary windings voltage: 480 Volts, 3-Phase, delta. Secondary windings voltages: 240Y/120 Volts, 3-Phase grounded. Frequency: 60 Hz. KVA rating: As shown on drawings. Taps: Six (6) 2.5% full capacity taps; 2 above and 4 below, rated voltage. Impedance: For transformers larger than 75 KVA, 4.5% minimum, 5.75% maximum. 2. Winding temperature rise shall be 150 degrees Centigrade in accordance with UL Specification Article 506. 3. Transformer shall be capable of operating at 100% of nameplate rating continuously while in an ambient temperature not exceeding 40 degrees Centigrade. 4. Transformer shall meet the daily overload requirements of ANSI Standard C57.96. Vibration Isolation, Factory-Installed: Provide neoprene rubber pads to isolate core and coil assembly from transformer enclosure. Installation: 1. Anchor transformer securely with minimum 1/2" diameter bolts. Strength of bolts used to secure the transformer shall be sufficient to resist shear and uplift produced by force equal to 1/2 of the equipment mass applied horizontally at center of gravity. 2. Provide 1" thick high resiliency pads to isolate transformer from floor or platform. Korfund "Elasto Rib" or equivalent. 3. Use flexible conduits at least 24" long for electrical connections. 4. Provide grounding of each transformer secondary including all conduits, wires, and connectors in accordance with NEC 250-26 and any local additional regulations.

PART 3	EXECUTION
3.01	GENERAL: A: Electric system layouts indicated on the drawings are generally diagrammatic and shall be followed as closely as actual construction and work of other trades will permit. Govern exact routing of cable and wiring and the locations of outlets by the structure and equipment served. Take all dimensions from architectural drawings. B. Consult all other drawings, verify scales and report any dimensional discrepancies or other conflicts with Owner before submitting bid. C. All home runs to panelboards are indicated as starting from the outlet nearest the panel and continuing in the general direction of that panel. Continue such circuits to the panel as though the routes were completely indicated. Terminate homeruns of signal, alarm, and communication systems in a similar manner. D. Avoid cutting and boring holes through structure or structural members wherever possible. Obtain prior approval of Owner and conform to all structural requirements when cutting or boring the structure is necessary and permitted. E. Furnish and install all necessary hardware, hangers, blocking, brackets, bracing, runners, etc. required for equipment specified under this Section. F. Provide necessary backing required to insure rigid mounting of outlet boxes.
3.02	WIRING METHODS: A. Install all wiring in raceway or use MC cable. Where approved by all Applicable codes.Conduit shall be rigid steel, IMC or EMT as follows: 1. Above ground: Use rigid steel, IMC or EMT. a. Wet locations: Rigid steel or IMC only. b. Locations subject to mechanical injury: Rigid steel or IMC only. c. Dry locations and not subject to mechanical injury: EMT, IMC or rigid steel conduit. 2. Underground: Use rigid steel. B. Use flexible conduits in the following applications: 1. Recessed lighting fixtures. 2. Motor connections. 3. At building joints. At wet locations, flexible conduit shall be liquid tight type.
3.03	INSTALLATION OF CONDUITS: A. General: 1. Run all conduit concealed unless otherwise noted or shown. 2. Run all conduit parallel to or at right angles to center lines of columns and beams. 3. Conduits above ceilings shall not obstruct removal of ceiling tiles, lighting fixtures, air diffusers, etc. 4. Conduits shall not cross any duct shaft or area designated as future duct shaft horizontally. Conduit risers when allowed in duct shaft must be coordinated with Mechanical work to avoid any conflict. B. Conduit Supports: 1. Support conduits with Underwriter's Laboratories listed steel conduit supports at intervals required by the National Electric Code. Wires or sheet metal strips are not acceptable for conduit support. Use conduit hangers for all conduits not directly fastened to structure and for all multiple conduit runs. Do not attach any conduit to mechanical ducts or pipes. 2. Individual conduits 1/2" and 3/4" size for lighting may be supported from ceiling support wires with Caddy clips only if acceptable to local code. Only one conduit is permitted to be attached to any ceiling support wire. Hang such conduit so as not to affect level of ceiling. 3. Avoid attaching conduit to fan plenums. When it is necessary to support conduit from fan plenum, provide a length of flexible conduit between portion attached fan plenum and portion attached to the building to minimize transmission of vibration to the building structure.
3.04	CONNECTIONS TO EQUIPMENT: A. General: 1. Furnish and install required power supply conduit and wiring to all equipment. See below for other wiring required. 2. Furnish and install a disconnect switch immediately ahead of and adjacent to each magnetic motor starter or appliance unless the motor appliance is located adjacent and within sight of the serving panelboard circuit breaker or switch. Verify all equipment nameplate current ratings prior to installation. 3. Install all rough-in work for equipment from approved shop drawings to suit the specific requirements of the equipment. 4. Furnish and install manual thermal protection for all motors not integrally equipped with thermal protection. 5. Furnish 120 Volt power to each control panel and time switch requiring a source of power to operate.
3.05	WIRE COLOR CODE: Color coding shall be continuous for wire #12 through #10 AWG. Phase conductors #8 and larger and nconductors of any size in cable assemblies may have colored phasing tape at terminations. Color code wires as follows: Voltage — Phase A — Phase B — Phase C — Neutral — Ground 120/208V — Black — Red — Blue — White — Green 277/480V — Brown — Orange — Yellow — Gray — Green

PART 3	EXECUTION
3.06	INSTALLATION OF WIRES: A. Pull no wire into any portion of the conduit system until all construction work which might damage the wire has been completed. B. Install all wire continuous from outlet to outlet or terminal to terminal. Splices in cables when required shall be made in handholes, pull boxes or junction boxes. Make branch circuit splices in outlet boxes with 8" of correctly color-coded tails left in the box. C. Splices in wires and cables shall be made utilizing materials and methods described herein before. D. Make all ground, neutral and line connections to receptacle and wiring device terminals as recommended by manufacture. Provide ground jumper from outlet box to ground terminal of devices when the device is not approved for grounding through the mounting screws. E. Provide Brady wire markers where number of conductors in a box exceeds four. F. Megger and record insulation resistance of all 600 Volt insulated conductors size #4/0 and larger using 500 Volt megger for one minute. Make tests with circuits isolated from source and load.
3.07	IDENTIFICATION: A. Provide nameplates for switchgears, panelboards, and all similar devices. Nameplates shall be screwed (no adhesives) engraved bakelite or photo-etched metallic nameplate identification showing panel designation, voltage and phase in minimum 1/4" high letters. B. Provide dymo labels on all lighting switches and convenience and special purpose receptacles to show panel and circuit number to which the device is connected. C. Each panelboard shall contain a metal-framed circuit directory inside cover, with plastic protector. D. Panelboard Schedule: After completion of work, provide typewritten updated panelboard schedules for all panelboards.
3.08	REMODELING WORK: A. Existing electrical wiring which will not be made obsolete and which will be disturbed due to construction changes required by this contract shall be restored to operating condition. Where construction changes require, outlets and conduit runs shall be relocated. Extend conduits and pull in new wiring or install junction boxes and splice in new wiring. B. Outlets from which fixtures, switches, receptacles, and/or other electrical devices are moved and which are not replaced or reused shall be removed, where outlets boxes, etc., are completely removed, the contractor shall cut off conduits and remove wiring. C. Where conduits extending through floors are to be abandoned, the contractor shall cut and cap or plug conduit, and the conduit shall not protrude above the floor. D. Where existing conduit is to be abandoned, the conduit shall be removed if it is exposed, in a crawl space or in accessible ceiling. Where it is impossible to remove the conduit, it shall be cut off and capped or plugged. E. Remove all existing wiring not reused or required to maintain continuity circuits to remain. F. The contractor shall be held fully responsible for the proper restoration of all existing surfaces requiring patching, plastering, painting and/or other repairs due to the installation of electrical work under the terms of this specification. Close all openings, repair all surfaces, etc., as required. G. Maintain circuit continuity to areas outside of this work. Provide new conduit and conductors as required to maintain continuity and maintain area as existing.
3.09	GROUNDING: A. Electrical service and separately derived alternating current system shall be grounded in accordance with NEC Article 250-3 to 250-26, inclusive. B. Ground non-current carrying metal parts of electrical equipment enclosures, frames, conductor raceways or cable trays to provide a low impendance path for line-to-ground fault current and to band all non-current carrying metal parts together. Provide ground conductor in each raceway system in addition to conductors shown. Equipment ground conductor shall be electrically and mechanically continuous from the electrical circuit source to the equipment to be grounded. Size ground conductors per NEC Article 250-95 unless larger conductors are shown on drawings. C. Grounding conductors shall be identified with green insulation. Where green insulation is not available on larger sizes, black insulation shall be used and suitable identified with green tape at each junction box or device enclosure. END OF SECTION

NOT FOR CONSTRUCTION

CLIENT:

ADDRESS:

CONFIDENTIALITY STATEMENT:

ALL DRAWINGS AND WRITTEN MATERIALS APPEARING HEREIN CONSTITUTE THE ORIGINAL AND UNPUBLISHED WORK OF THE DESIGNER AND THE SAME MAY NOT BE DUPLICATED, USED OR DISCLOSED WITHOUT CONSENT OF THE DESIGNER.

NOTES:

1. ALL DIMENSIONS HEREIN ARE IN IMPERIAL UNITS UNLESS STATED OTHERWISE.
2. THESE DRAWINGS ARE TO BE READ IN CONJUNCTION WITH ALL RELEVANT DESIGNER, ENGINEER OR SPECIALIST DRAWINGS AND SPECIFICATIONS.
3. THE CONTRACTOR MUST CHECK ALL DIMENSION AT SITE BEFORE COMMENCING WORK.
4. THE CONTRACTOR IS RESPONSIBLE FOR PROVIDING ALL NECESSARY TEMPORARY SUPPORT TO THE BUILDING AND ANY ADJACENT STRUCTURES.

REV. NO.	DESCRIPTION	DATE	BY
01	CITY COMMENTS	4/23	A.B

PROJECT:

TITLE:

ELECTRICAL SPECIFICATIONS

PROJ. NO.	PROJ. ENGR.	SCALE @ 24X36:
		3/8" = 1' - 0"

DRAWING NO.	REV.
E1-00	

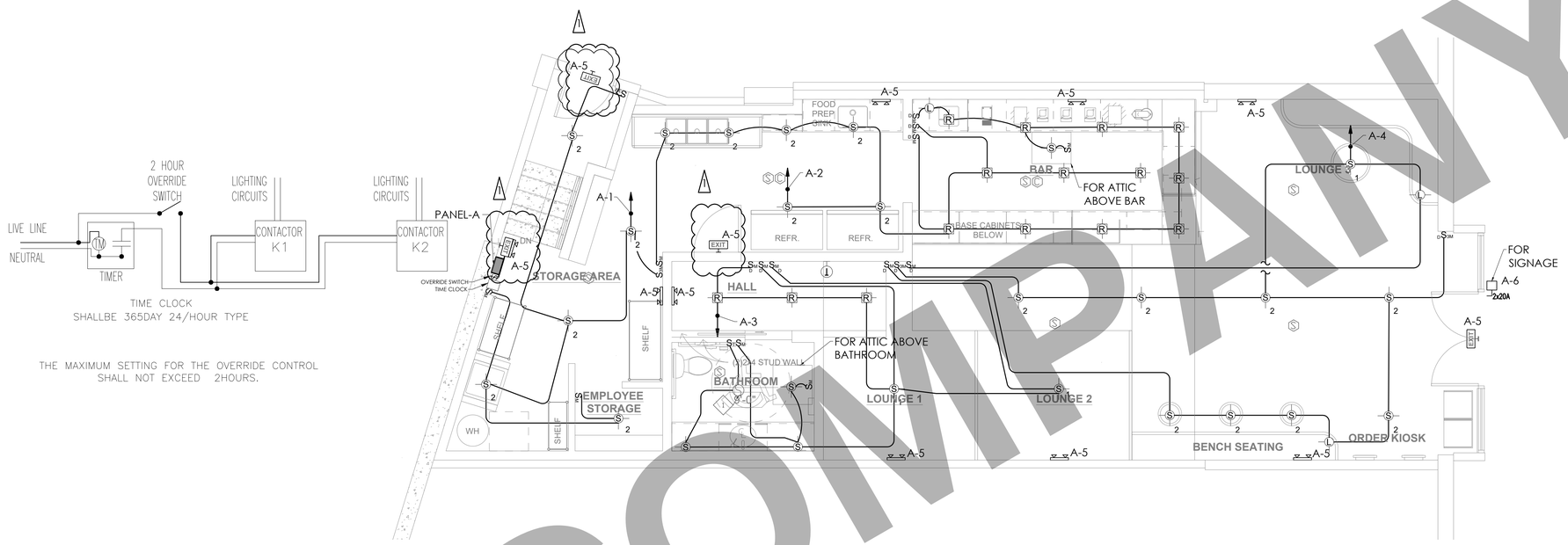

SHEET NOTES:

1. PROVIDE HEAVY DUTY JUNCTION BOX, FLUSH IN CEILING (OR WALL) FOR EXHAUST FANS THAT TURNS ON WHEN THE TIMER SWITCH OF THIS FAN IS TURNED ON

SHEET NOTES:

1. PROVIDE HEAVY DUTY JUNCTION BOX, FLUSH IN CEILING (OR WALL) FOR EXHAUST FANS THAT TURNS ON WHEN THE TIMER SWITCH OF THIS FAN IS TURNED ON
2. PROVIDE HEAVY DUTY JUNCTION BOX, FLUSH IN CEILING (OR WALL) FOR COVE LIGHTING
3. PROVIDE HEAVY DUTY JUNCTION BOX, FLUSH IN CEILING (OR WALL) FOR WALL WASH LIGHT
4. PROVIDE HEAVY DUTY JUNCTION BOX, FLUSH IN CEILING (OR WALL) FOR CUSTOM LIGHTING FIXTURE

1. Track lighting must be hard wired. Cord connection is not allowed. CEC 410.151.
2. Track lighting must be supported at a minimum of two points and every four feet. CEC 410.154.

"AS Per Section 3-20-1.B of the Zoning Ordinance, screening shall be provided so that materials stored in any outdoor storage area and/or equipment at grade or on the roof area screened from adjacent streets, no matter the street grade, and all properties at the same grade."

CALIFORNIA RETAIL FOOD CODE: In every room and area in which any food is prepared, manufactured, processed, or prepackaged, or in which equipment or utensils are cleaned, sufficient natural or artificial lighting shall be provided. Conduits of all types shall be installed within walls as practicable. Section #: 114252, 114271

BCE COMPANY

CLIENT:

ADDRESS:

CONFIDENTIALITY STATEMENT:

ALL DRAWINGS AND WRITTEN MATERIALS APPEARING HEREIN CONSTITUTE THE ORIGINAL AND UNPUBLISHED WORK OF THE DESIGNER AND THE SAME MAY NOT BE DUPLICATED, USED OR DISCLOSED WITHOUT CONSENT OF THE DESIGNER.

NOTES:

1. ALL DIMENSIONS HEREIN ARE IN IMPERIAL UNITS UNLESS STATED OTHERWISE.
2. THESE DRAWINGS ARE TO BE READ IN CONJUNCTION WITH ALL RELEVANT DESIGNER, ENGINEER OR SPECIALIST DRAWINGS AND SPECIFICATIONS.
3. THE CONTRACTOR MUST CHECK ALL DIMENSION AT SITE BEFORE COMMENCING WORK.
4. THE CONTRACTOR IS RESPONSIBLE FOR PROVIDING ALL NECESSARY TEMPORARY SUPPORT TO THE BUILDING AND ANY ADJACENT STRUCTURES.

REV. NO.	DESCRIPTION	DATE	BY
01	CITY COMMENTS	4/23	A.B

PROJECT:

TITLE:

LIGHTING LAYOUT

PROJ. NO.	PROJ. ENGR.	SCALE @ 24X36:
		1/4" = 1'-0"

DRAWING NO.	REV.
E2-00	

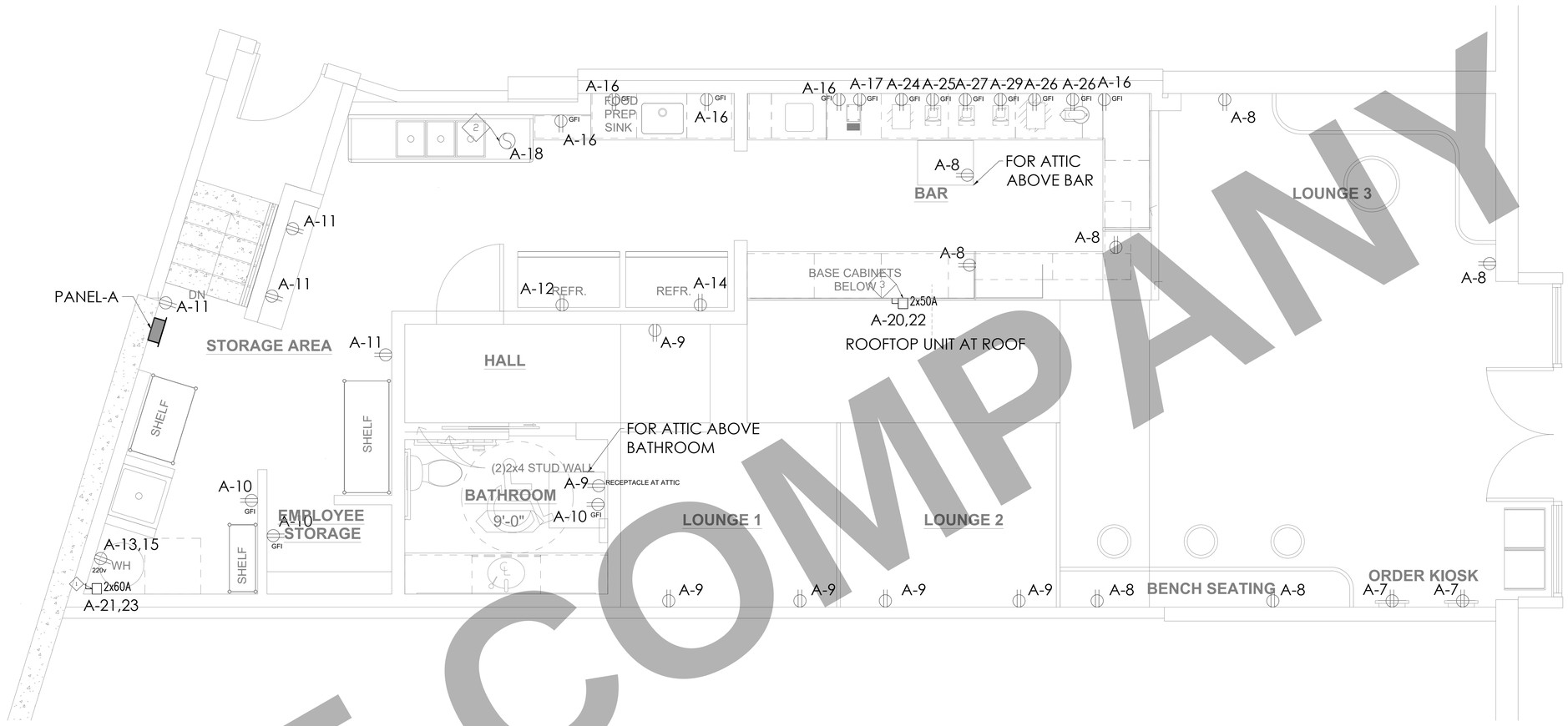

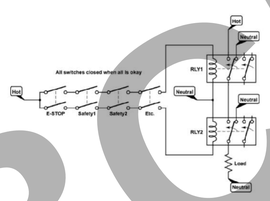

DETAIL-1

"AS Per Section 3-20-1.B of the Zoning Ordinance,
screening shall be provided so that materials stored in any outdoor storage area and/or
equipment at grade or on the roof area screened from adjacent streets, no matter the street grade, and all properties at the same grade."

Per Section 3-20-1.B of the Zoning Ordinance, screening shall be provided so that materials stored in any outdoor storage area and/or Page 3 of 4 equipment at grade or on the roof area screened from adjacent streets, no matter the street grade, and all properties at the same grade.

SHEET NOTES:

1. PROVIDE NEMA 3R DISCONNECT SWITCH FOR ELECTRIC WATER HEATER
2. PROVIDE HEAVY DUTY JUNCTION BOX, FLUSH IN CEILING (OR WALL) FOR EXHAUST FANS THAT TURNS ON WHEN THE TIMER SWITCH OF THIS FAN IS TURNED ON
3. PROVIDE NEMA 3R DISCONNECT SWITCH FOR RTU

BCE COMPANY

CLIENT:

ADDRESS:

CONFIDENTIALITY STATEMENT:

ALL DRAWINGS AND WRITTEN MATERIALS APPEARING HEREIN CONSTITUTE THE ORIGINAL AND UNPUBLISHED WORK OF THE DESIGNER AND THE SAME MAY NOT BE DUPLICATED, USED OR DISCLOSED WITHOUT CONSENT OF THE DESIGNER.

NOTES:

1. ALL DIMENSIONS HEREIN ARE IN IMPERIAL UNITS UNLESS STATED OTHERWISE.
2. THESE DRAWINGS ARE TO BE READ IN CONJUNCTION WITH ALL RELEVANT DESIGNER, ENGINEER OR SPECIALIST DRAWINGS AND SPECIFICATIONS.
3. THE CONTRACTOR MUST CHECK ALL DIMENSION AT SITE BEFORE COMMENCING WORK.
4. THE CONTRACTOR IS RESPONSIBLE FOR PROVIDING ALL NECESSARY TEMPORARY SUPPORT TO THE BUILDING AND ANY ADJACENT STRUCTURES.

REV. NO.	DESCRIPTION	DATE	BY
01	CITY COMMENTS	4/23	A.B

PROJECT:

TITLE:
POWER LAYOUT

PROJ. NO.	PROJ. ENGR.	SCALE @ 24X36:
		3/8"=1'-0"

DRAWING NO.	REV.
E3-00	

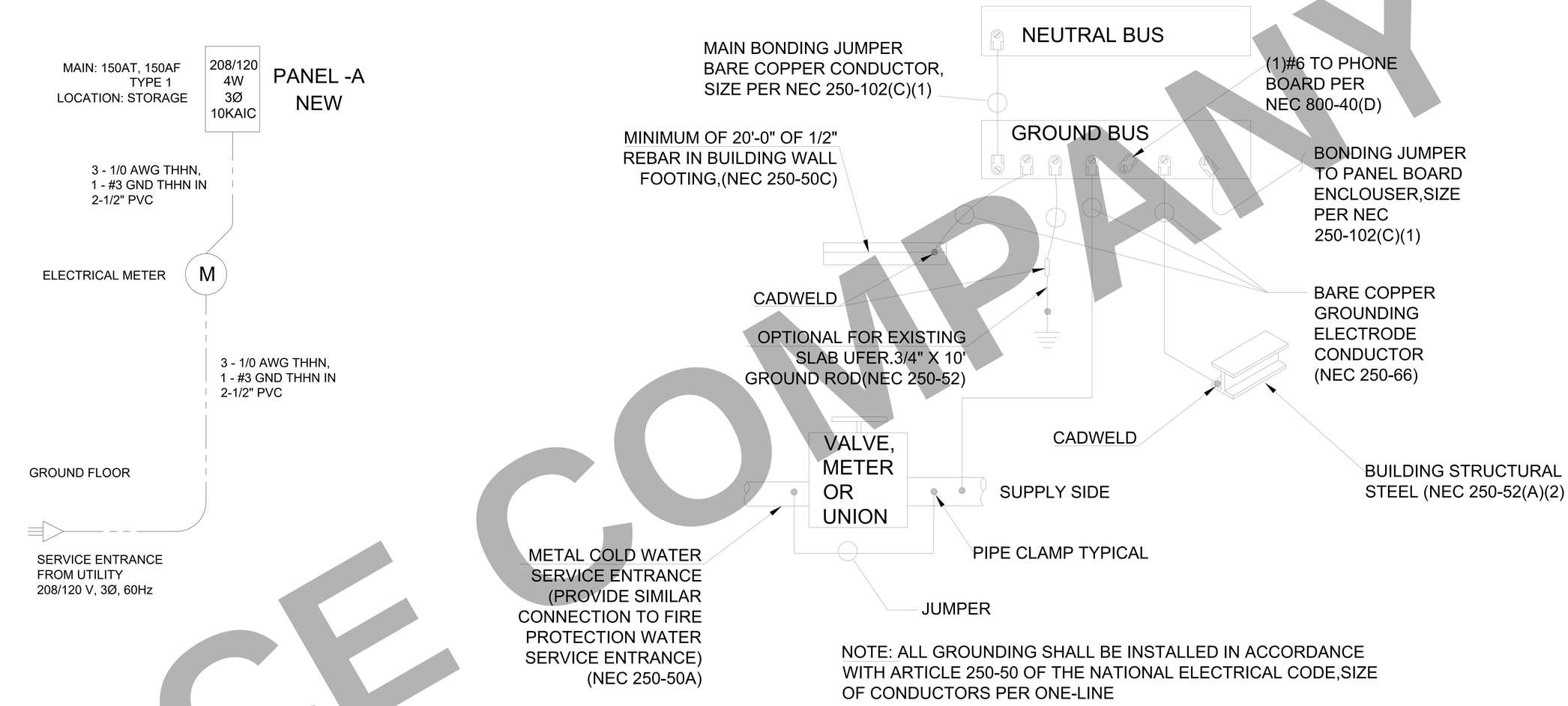

NOTE: ALL GROUNDING SHALL BE INSTALLED IN ACCORDANCE WITH ARTICLE 250-50 OF THE NATIONAL ELECTRICAL CODE,SIZE OF CONDUCTORS PER ONE-LINE

GROUNDING DETAIL

BCE COMPANY

CLIENT:

ADDRESS:

CONFIDENTIALITY STATEMENT:

ALL DRAWINGS AND WRITTEN MATERIALS APPEARING HEREIN CONSTITUTE THE ORIGINAL AND UNPUBLISHED WORK OF THE DESIGNER AND THE SAME MAY NOT BE DUPLICATED, USED OR DISCLOSED WITHOUT CONSENT OF THE DESIGNER.

NOTES:

1. ALL DIMENSIONS HEREIN ARE IN IMPERIAL UNITS UNLESS STATED OTHERWISE.
2. THESE DRAWINGS ARE TO BE READ IN CONJUNCTION WITH ALL RELEVANT DESIGNER, ENGINEER OR SPECIALIST DRAWINGS AND SPECIFICATIONS.
3. THE CONTRACTOR MUST CHECK ALL DIMENSION AT SITE BEFORE COMMENCING WORK.
4. THE CONTRACTOR IS RESPONSIBLE FOR PROVIDING ALL NECESSARY TEMPORARY SUPPORT TO THE BUILDING AND ANY ADJACENT STRUCTURES.

REV. NO.	DESCRIPTION	DATE	BY
01	CITY COMMENTS	4/23	A.B

PROJECT:

TITLE:
SINGLE LINE DIAGRAM & GROUNDING DETAILS

PROJ. NO.	PROJ. ENGR.	SCALE @ 24X36:
		NTS

DRAWING NO.	REV.
E4-00	

Location: STORAGE AREA

*	LOAD SUMMARY	CL	DF	CONNECTED LOAD A	CONNECTED LOAD B	CONNECTED LOAD C	DEMAND TOTAL
L	Lighting	1.41	1.25	0.41	0.38	0.62	1.77
R	Convenience Recept	7.00	1.00	3.26	3.02	0.72	7.00
H	Heating (Space)	14.16	1.25		7.08	7.08	17.70
C	Cooling		1.00				
A	HVAC	8.50	1.00	4.20	4.20	0.10	8.50
P	Process		1.00				
O	Other Continuous		1.25				
K	Kitchen	10.10	6.00	3.35	2.77	3.98	6.57
N	Noncontinuous		1.00				
M	Motor		1.00				
	Total	**41.18**		11.22	17.45	12.50	41.53

Total Demand Load (KVA)	41.53
Total Demand Current (A)	115.29
Min. Feeder Ampacity (A)	144.11

PANEL A

PANELBOARD DESIGNATION

SYSTEM VOLTAGE	208/120V, 3Φ, 4W
BUS SIZE	150
SYSTEM TYPE	NORMAL
FEEDER PROT	150A-3P C/B Bus Plug
CONDUCTOR SIZE	1/0 AWG - #3G CU
CONDUCTOR/PHASE	1
MAINS	150A MCB
SCCR	FULLY RATED
MCB RATING	80%
GROUND FAULT	NO
FEEDER LENGTH (FT)	50
FEEDER V. DROP (%)	0.763
FAULT CURRENT	
KAIC RATING	10
ENCLOSURE	TYPE 1

	DESCRIPTION	*	WIRE	GRD	CB	KVA	A	B	C	KVA	CB	WIRE	GRD	DESCRIPTION	*	
1	LIGHTING STORAGE AREA	L	2x 14 AWG	- #14G	15A-1P	0.09	0.41			0.32	15A-1P	2x 14 AWG	- #14G	LIGHTING KITCHEN - BAR	L	2
3	LIGHITNG TOILET - LOUNGES 1-2	L	2x 14 AWG	- #14G	15A-1P	0.16		0.38		0.22	15A-1P	2x 14 AWG	- #14G	LIGHTING MAIN LOUNGE	L	4
5	EMERGENCY LIGHTING	L	2x 14 AWG	- #14G	15A-1P	0.12			0.62	0.50	20A-1P	2x 12 AWG	- #12G	SIGANGE	L	6
7	ORDER KIOSKS	R	2x 12 AWG	- #12G	20A-1P	1.50	2.76			1.26	20A-1P	2x 12 AWG	- #12G	RECEPTACLES LOUNGE	R	8
9	RECEPTACLES HALL - LOUNGE 1-2	R	2x 12 AWG	- #12G	20A-1P	1.08		1.62		0.54	20A-1P	2x 12 AWG	- #12G	RECEPTACLES TOILET - JANITOR AREA - EMPLOYEE STORAGE	R	10
11	RECEPTACLES STORAGE AREA	R	2x 12 AWG	- #12G	20A-1P	0.72			1.86	1.14	20A-1P	2x 12 AWG	- #12G	REF. 1	K	12
13	JANITOR AREA	R	3x 12 AWG	- #12G	20A-2P	0.50	1.64			1.14	20A-1P	2x 12 AWG	- #12G	REF. 2	K	14
15		R				0.50		1.40		0.90	20A-1P	2x 12 AWG	- #12G	RECEPTACLES KITCHEN - BAR	R	16
17	ICE MAKER	K	2x 12 AWG	- #12G	20A-1P	0.64			0.74	0.10	20A-1P	2x 12 AWG	- #12G	EXHAUST FAN	A	18
19	SPACE						4.20			4.20	50A-2P	3x 6 AWG	- #6G	RTU-01	A	20
21	EWH	H	3x 6 AWG	- #10G	60A-2P	7.08		11.28		4.20					A	22
23		H				7.08			7.49	0.41	20A-1P	2x 12 AWG	- #12G	SEALER MACHINE - 99SF	K	24
25	BLENDING STATION-1	K	2x 12 AWG	- #12G	20A-1P	1.80	2.21			0.41	20A-1P	2x 12 AWG	- #12G	SEALER MACHINE - 9EF	K	26
27	BLENDING STATION-2	K	2x 12 AWG	- #12G	20A-1P	1.80		2.77		0.97	20A-1P	2x 12 AWG	- #12G	STAND MIXER	K	28
29	BLENDING STATION-3	K	2x 12 AWG	- #12G	20A-1P	1.80			1.80					SPACE		30
31	SPACE													SPACE		32
33	SPACE													SPACE		34
35	SPACE													SPACE		36
		(KVA)														
						Total Connected Load	11.22	17.45	12.50							

BCE COMPANY

CLIENT:

ADDRESS:

CONFIDENTIALITY STATEMENT:

ALL DRAWINGS AND WRITTEN MATERIALS APPEARING HEREIN CONSTITUTE THE ORIGINAL AND UNPUBLISHED WORK OF THE DESIGNER AND THE SAME MAY NOT BE DUPLICATED, USED OR DISCLOSED WITHOUT CONSENT OF THE DESIGNER.

NOTES:

1. ALL DIMENSIONS HEREIN ARE IN IMPERIAL UNITS UNLESS STATED OTHERWISE.
2. THESE DRAWINGS ARE TO BE READ IN CONJUNCTION WITH ALL RELEVANT DESIGNER, ENGINEER OR SPECIALIST DRAWINGS AND SPECIFICATIONS.
3. THE CONTRACTOR MUST CHECK ALL DIMENSION AT SITE BEFORE COMMENCING WORK.
4. THE CONTRACTOR IS RESPONSIBLE FOR PROVIDING ALL NECESSARY TEMPORARY SUPPORT TO THE BUILDING AND ANY ADJACENT STRUCTURES.

REV. NO.	DESCRIPTION	DATE	BY
01	CITY COMMENTS	4/23	A.B

PROJECT:

TITLE:

PANEL BOARDS SCHEDULES

PROJ. NO. | PROJ. ENGR. | SCALE @ 24X36: NTS

DRAWING NO. E5-00 | REV.

CERTIFICATE OF COMPLIANCE - NONRESIDENTIAL PERFORMANCE COMPLIANCE METHOD NRCC-PRF-E

Nonresidential Performance Compliance Method (Page 1 of 18)

Project Name:	Boba Tea Cafe	Date Prepared:	2023-02-10

A. General Information

1	Project Name	Boba Tea Cafe			
2	Run Title	Title 24 Analysis			
3	Project Location	1910 NORTH MAIN ST., #140			
4	City	WALNUT CREEK	5	Standards Version	
6	Zip code	95496	7	Compliance Software (version)	EnergyPro 9.0
8	Climate Zone	12	9	Building Orientation (deg)	0
10	Building Type(s)	• Nonresidential	11	Weather File	BUCHANAN-FIELD_STYP20.epw
12	Project Scope	• Existing alteration	13	Number of Dwelling Units	0
14	Total Conditioned Floor Area in Scope (ft²)	1316	15	Total # of hotel/motel rooms	0
16	Total Unconditioned Floor Area (ft²)	56	17	Fuel Type	Natural gas
18	Nonresidential Conditioned Floor Area	1316	19	Total # of Stories (Habitable Above Grade)	1
20	Residential Conditioned Floor Area	0			

B1. PROJECT SUMMARY

Table B shows which building components are included in the performance calculation. If indicated as not included, the project must show compliance prescriptively if within the permit application.

Building Components Complying via Performance

Envelope (See Table G) Nonres	☐	Performance	Covered Process: Commercial Kitchens (see Table J)	☐	Performance
	☒	Not Included		☒	Not Included
Mechanical (See Table H) Nonres	☒	Performance		☐	Performance
	☐	Not Included		☒	Not Included
Domestic Hot Water (See Table I) Nonres	☒	Performance	Covered Process: Laboratory Exhaust (see Table J)	☐	Performance
	☐	Not Included		☒	Not Included
Lighting (Indoor Conditioned, see Table K) Nonres	☒	Performance	*Electrical power systems, commissioning, solar ready, elevator and escalator requirements are mandatory and should be documented on the NRCC form listed if applicable (i.e. compliance will not be shown on the NRCC-PRF-E.)*		
	☐	Not Included			
Solar Thermal Water Heating (See Table I3)	☐	Performance			
	☒	Not Included			

Building Components Complying Prescriptively

The following building components are ONLY eligible for prescriptive compliance and should be documented on the NRCC form listed if within the scope of the permit application (i.e. compliance will not be shown on the NRCC-PRF-E).	
Indoor Lighting (Unconditioned) 140.6 & 170.2(e)	NRCC-LTI-E is required
Outdoor Lighting 140.7 & 170.2(e)	NRCC-LTO-E is required
Sign Lighting 140.8 & 170.2(e)	NRCC-LTS-E is required

Building Components Complying with Mandatory Measures

Electrical Power Distribution 110.11	NRCC-ELC-E is required
Commissioning 120.8	NRCC-CXR-E is required
Solarand Battery 110.10	NRCC-SAB-E is required

C1. COMPLIANCE SUMMARY

COMPLIES[3]	Time Dependent Valuaton (TDV)		Source Energy Use
	Efficiency[1] (kBtu/ft² - yr)	Total[2] (kBtu/ft² - yr)	Total[2] (kBtu/ft² - yr)
Standard Design	290.6	277.49	27.63
Proposed Design	227.52	227.52	18.24
Compliance Margins	**63.08**	**49.97**	**9.39**
	Pass	**Pass**	**Pass**

[1] *Efficiency measures include improvements like a better building envelope and more efficient equipment*
[2] *Compliance Totals include efficiency, photovoltaics and batteries*
[3] *Building complies when efficiency and total compliance margins are greater than or equal to zero and unmet load hour limits are not exceeded*

C2. TDV ENERGY COMPLIANCE RESULTS FOR PERFORMANCE COMPONENTS (Annual TDV Energy Use, kBtu/ft² - yr)

COMPLIES[2]			
Energy Component	**Standard Design (TDV)**	**Proposed Design (TDV)**	**Compliance Margin (TDV)[1]**
Space Heating	11.3	38.47	-27.17
Space Cooling	74.99	80.09	-5.1
Indoor Fans	155.26	58.49	96.77
Heat Rejection	0	0	0
Pumps & Misc.	0	0	0
Domestic Hot Water	18.79	19.58	-0.79
Indoor Lighting	30.26	30.89	-0.63
Flexibility	---	---	---
EFFICIENCY COMPLIANCE TOTAL	**290.6**	**227.52**	**63.08 (21.7%)**
Photovoltaics	-12.99	---	-12.99
Batteries	-0.12	---	-0.12
TOTAL COMPLIANCE	**277.49**	**227.52**	**49.97 (18%)**

[1] *Notes: This number in parenthesis following the Compliance Margin in column 4, represents the Percent Better than Standard.*

C3. TDV ENERGY RESULTS FOR NON-REGULATED COMPONENTS[1]

Non-Regulated Energy Component	Standard Design (TDV)	Proposed Design (TDV)	Compliance Margin (TDV)[1]
Receptacle	69.81	69.81	---
Process	29.79	29.79	---
Other Ltg	1.47	1.47	---
Process Motors	---	---	---
TOTAL (TOTAL COMPLIANCE + NON-REGULATED COMPONENTS)	**378.56**	**328.59**	**49.97 (13.2%)**

[1] *Notes: This table is not used for Energy Code Compliance.*

C4. SOURCE ENERGY COMPLIANCE RESULTS FOR PERFORMANCE COMPONENTS (Annual SOURCE Energy Use, kBtu/ft² /yr)

COMPLIES[2]			
Energy Component	**Standard Design (SOURCE)**	**Proposed Design (SOURCE)**	**Compliance Margin (SOURCE)[1]**
Space Heating	1.65	5.65	-4
Space Cooling	2.8	3.05	-0.25
Indoor Fans	14.51	5.48	9.03
Heat Rejection	0	0	0
Pumps & Misc.	0	0	0
Domestic Hot Water	6.86	1.69	5.17
Indoor Lighting	2.32	2.37	-0.05
Flexibility	---	---	---
EFFICIENCY COMPLIANCE TOTAL	**28.14**	**18.24**	**9.9 (35.2%)**
Photovoltaics	-0.47	---	-0.47
Batteries	-0.04	---	-0.04
TOTAL COMPLIANCE	**27.63**	**18.24**	**9.39 (34%)**

[1] *Notes: This number in parenthesis following the Compliance Margin in column 4, represents the Percent Better than Standard.*

C5. SOURCE ENERGY RESULTS FOR NON-REGULATED COMPONENTS[1]

Non-Regulated Energy Component	Standard Design (SOURCE)	Proposed Design (SOURCE)	Compliance Margin (SOURCE)[1]
Receptacle	6.47	6.47	---
Process	3.27	3.27	---
Other Ltg	0.11	0.11	---
Process Motors	---	---	---
TOTAL (TOTAL COMPLIANCE + NON-REGULATED COMPONENTS)	**37.48**	**28.09**	**9.39 (25.1%)**

[1] *Notes: This table is not used for Energy Code Compliance.*

C6. 'ABOVE CODE' QUALIFICATIONS

☐ This project is pursuing CalGreen Tier 1 ☐ This project is pursuing CalGreen Tier 2

C7. ENERGY USE SUMMARY

Energy Component	Standard Design Site (MWh)	Proposed Design Site (MWh)	Margin (MWh)	Standard Design Site (MBtu)	Proposed Design Site (MBtu)	Margin (MBtu)
Space Heating	0.4	1.6	-1.2	---	---	---
Space Cooling	2.4	2.9	-0.5	---	---	---
Indoor Fans	7.1	2.7	4.4	---	---	---
Heat Rejection	---	---	---	---	---	---
Pumps & Misc.	---	---	---	---	---	---
Domestic Hot Water	0	1	-1	9.7	---	---
Indoor Lighting	1.6	1.6	0	---	---	---
Flexibility	---	---	---	---	---	---
EFFICIENCY TOTAL	**11.5**	**9.8**	**1.7**	**9.7**	**0**	**9.7**
Photovoltaics	-0.9	---	---	---	---	---
Batteries	0	---	---	---	---	---
ENERGY USE SUBTOTAL	**10.6**	**9.8**	**0.8**	**9.7**	**0**	**9.7**
Receptacle	3.4	3.4	0	2.5	2.5	0
Process	1.4	1.4	0	---	---	---
Other Ltg	0.1	0.1	0	---	---	---
Process Motors	---	---	---	---	---	---
ENERGY USE TOTAL	**15.5**	**14.7**	**0.8**	**12.2**	**2.5**	**9.7**

C8. ENERGY USE INTENSITY (EUI)

	Standard Design (kBtu/ft² / yr)	Proposed Design (kBtu/ft² / yr)	Margin (kBtu/ft² / yr)	Margin Percentage
GROSS EUI[1]	49.68	38.38	11.3	22.75
NET EUI[1]	47.44	38.38	9.06	19.1

1*Notes: Gross EUI is Energy Use Total (not including PV)/Total Building Area. Net EUI is Energy Use Total (including PV)/Total Building Area.*

H1. DRY SYSTEM EQUIPMENT (FURNACES, AIR HANDLING UNITS, HEAT PUMPS, VRF, ECONOMIZERS ETC.)

01	02	03	04	05	06	07	08	09	10	11	12
			Heating				Cooling				
Equipment Name	Equipment Type	Qty	Total Heating Output (kBtu/h)	Supp Heat Output (kBtu/h)	Efficiency Unit	Efficiency	Total Cooling Output (kBtu/h)	Efficiency Unit	Efficiency	Economizer Type (if present)	Status[1]
RTU-01	Single Zone Heat Pump (SZHP) Air System	1	49.99	0	HSPF	8.8	49.99	EER SEER	14 11.8	No Economizer	N

[1] *Status: N - New, A - Altered, E - Existing*

H3. NONRESIDENTIAL / COMMON USE AREA FAN SYSTEMS SUMMARY

01	02	03	04	05	06	07	08	09	10	11	12	13
			Supply Fan				Return / Relief Fan					
Name or Item Tag	Qty	Design OA CFM	CFM	Power	Power Units	Control	Fan Type	CFM	Power	Power Units	Control	Status[1]
RTU-01	1	396.67	1,600	0.5	BHP	Constant Vol	N/A	N/A	N/A	N/A	N/A	N

[1] *Status: N - New, A - Altered, E - Existing*

BCE COMPANY

CLIENT:

ADDRESS:

CONFIDENTIALITY STATEMENT:

ALL DRAWINGS AND WRITTEN MATERIALS APPEARING HEREIN CONSTITUTE THE ORIGINAL AND UNPUBLISHED WORK OF THE DESIGNER AND THE SAME MAY NOT BE DUPLICATED, USED OR DISCLOSED WITHOUT CONSENT OF THE DESIGNER.

NOTES:

1. ALL DIMENSIONS HEREIN ARE IN IMPERIAL UNITS UNLESS STATED OTHERWISE.
2. THESE DRAWINGS ARE TO BE READ IN CONJUNCTION WITH ALL RELEVANT DESIGNER, ENGINEER OR SPECIALIST DRAWINGS AND SPECIFICATIONS.
3. THE CONTRACTOR MUST CHECK ALL DIMENSION AT SITE BEFORE COMMENCING WORK.
4. THE CONTRACTOR IS RESPONSIBLE FOR PROVIDING ALL NECESSARY TEMPORARY SUPPORT TO THE BUILDING AND ANY ADJACENT STRUCTURES.

REV. NO.	DESCRIPTION	DATE	BY

PROJECT:

TITLE:
T24-01

PROJ. NO.	PROJ. ENGR.	SCALE @ 24X36: NTS

DRAWING NO.
T 2 4 - 0 1

REV.

H5. GENERAL EXHAUST FAN SUMMARY

1	2	3	4	5	6	7	8
System ID	Zone Name	Qty	CFM	Power/Power/Power	Power Units	Continuous Operation?	Status[1]
Bar & Kitchen3	1-Bar & Kitchen	1	135	0.04	0.26	1.23	ExistingUnchanged

[1] *Status: N - New, A - Altered, E - Existing*

H8. SYSTEM SPECIAL FEATURES

1	2	3	4
System Name	Equipment Type	Interlocks per 140.4(n)[1]	Other Special Features and Controls
EWH-G11 - SHW	Service Hot Water	N/A	Fixed Temperature Control

Notes: This table includes controls related to the performance path only. For projects using the prescriptive path, mandatory and prescriptive controls requirements are documented on the NRCC-MCH-E.

[1] *Yes = interlocks are provided, No = interlocks are not provided, NA means no operable openings.*

H9. NONRESIDENTIAL / COMMON USE AREA & HOTEL/MOTEL VENTILATION

1	2	3		4	5	6	7
Zone Name	Mechanical Ventilation					Conditioned Area (sf)	DCV or Occupant Sensor Controls, or Both
	Ventilation Function	# of People# of People	Supply OA CFM		Exhaust CFM		
1-Bar & Kitchen	Exhaust - Kitchenettes General - Unoccupied Misc - All others	26.29	396.67		135	1316	N/A

H11. ZONAL SYSTEM AND TERMINAL UNIT SUMMARY

01	02	03	04	05	06	07	08	09	10	11	12
System ID	System Type	Qty	Rated Capacity (kBtuh)		Airflow (cfm)			Fan			VSD
			Heating	Cooling	Design	Min.	Min. Ratio	Power	Power Units	Cycles	
1-Bar & Kitchen-Trm	Uncontrolled	1	N/A	N/A	1,600	N/A	0	0.5	BHP	N/A	Constant Speed

I1. WATER HEATER EQUIPMENT SUMMARY

01	02	03	04	05	06	07	08	09	10	11	12	13	14
Name	Heater Element Type	Tank Type	Qty	Tank Vol (gal)	Rated Input	Rated Input Unit	Efficiency	Efficiency Unit	Tank Insulation R-value Int/Ext	Standby Loss Fraction	1st Hr. Rating or Flow Rate (gal)	Heat Pump Type	Tank Location or Ambient Condition
AO-SMITH DRE-522	Electricity	Storage	1	50	4.5	kW	kW	UEF	N/A	N/A	80	N/A	N/A

K1. INDOOR CONDITIONED LIGHTING GENERAL INFO

01	02	03	04	05	06
Occupancy Type[1]	Conditioned Floor Area[2] (ft²)	Installed Lighting Power (Watts)	Lighting Control Credits (Watts)	Additional (Custom) Allowance	
				Area Category Footnotes (Watts)	Area Category Footnotes (Watts)
All Other Space Types	63	20	0	0	0
Kitchenette or Residential Kitchen	354	309.5	0	0	0
Lounge	748	321	0	0	0
Commercial Industrial Warehouse	151	55.5	0	0	0
Building Totals:	**1316**	**706**	**0**	**0**	**0**

[1]*See Table 140.6-C*
[2]*See NRCC-LTI-E if for unconditioned spaces*
[3]*Lighting information for existing spaces modeled is not included in this table*

HVAC SYSTEM HEATING AND COOLING LOADS SUMMARY

Project Name: Boba Tea Cafe			Date: 2/10/2023
System Name: RTU-01			Floor Area: 1,316

ENGINEERING CHECKS	
Number of Systems	1
Heating System	
Output per System	48,000
Total Output (Btuh)	48,000
Output (Btuh/sqft)	36.5
Cooling System	
Output per System	48,000
Total Output (Btuh)	48,000
Total Output (Tons)	4.0
Total Output (Btuh/sqft)	36.5
Total Output (sqft/Ton)	329.0
Air System	
CFM per System	1,600
Airflow (cfm)	1,600
Airflow (cfm/sqft)	1.22
Airflow (cfm/Ton)	400.0
Outside Air (%)	23.1%
Outside Air (cfm/sqft)	0.28
Note: values above given at ARI conditions	

SYSTEM LOAD

	COIL COOLING PEAK			COIL HTG. PEAK	
	CFM	Sensible	Latent	CFM	Sensible
Total Room Loads	1,505	27,843	6,251	362	13,753
Return Vented Lighting		0			
Return Air Ducts		1,392			688
Return Fan		0			0
Ventilation	370	7,216	-2,320	370	18,449
Supply Fan		1,535			-1,535
Supply Air Ducts		1,392			688
TOTAL SYSTEM LOAD		39,378	3,931		32,041

HVAC EQUIPMENT SELECTION

Standard Heat Pump	45,638	0	27,551
Total Adjusted System Output (Adjusted for Peak Design conditions)	45,638	0	27,551
TIME OF SYSTEM PEAK	Jul 2 PM		Jan 1 AM

HEATING SYSTEM PSYCHROMETRICS (Airstream Temperatures at Time of Heating Peak)

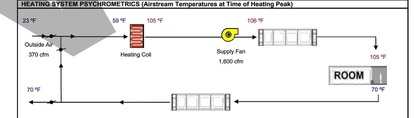

COOLING SYSTEM PSYCHROMETRICS (Airstream Temperatures at Time of Cooling Peak)

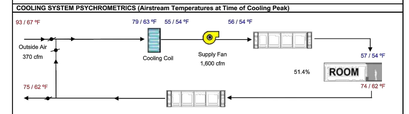

K2. INDOOR CONDITIONED LIGHTING SCHEDULE

Luminaire Schedule (includes all permanent installed lighting in conditioned space, and portable lighting over 0.3 w/ft[2] in offices)

01	02	03	04	05	06
Name or Item Tag	Complete Luminaire Description (i.e. 3-lamp fluorescent troffer, F32T8, one dimmable electronic ballast)	Installed Watts (Conditioned)			
		Watts per luminaire	How is Wattage determined	Total Number of Luminaires	Installed Watts
L3	L3 - LED RECESSED SIMILAR TO BRAND: ZENRYSAM	15	According to	15	225
L2	L2 - LED PENDANT SIMILAR TO BRAND: JONATHAN Y	18.5	According to	18	333
L4	L4 - LED SCONCE WALL MOUNTED	10	According to	4	40
L1	L1 - LED CHANDELIER SIMILAR TO JYL7203A	34	According to	3	102
L5	L5 - LED LIGHT STRIP	3	According to	2	6

[1] *If lighting power densities were used in the compliance model Building Departments will need to check prescriptive forms for Luminaire Schedule details.*

K3. INDOOR CONDITIONED LIGHTING CONTROL CREDITS

Lighting Control Credits Schedule (includes all lighting controls installed in conditioned space for compliance credit per 140.6(a)2 and Table 140.6-A)

01	02	03	04	05	06	07	08	09
Area Description	Primary Function Area (must meet requirements of Table 140.6-A and 170.2-L)	Type of Lighting Control	Power Adjustment Factor (PAF)	Luminaire Item Tag	Watts per Luminaire	# of Luminaires	Lighting Controlled (Watts)	Control Credit (Watts)
S-1-Bar & Kitchen	Kitchenette or Residential Kitchen			L3	15	12	180	0
S-1-Bar & Kitchen	Kitchenette or Residential Kitchen			L2	18.5	7	129.5	0
S-2-Bathroom	All Other Space Types			L4	10	2	20	0
S-3-Lounge 03	Lounge			L1	34	1	34	0
S-3-Lounge 03	Lounge			L2	18.5	7	129.5	0
S-3-Lounge 03	Lounge			L5	3	2	6	0
S-3-Lounge 03	Lounge			L4	10	1	10	0
S-4-Lounge 01&02	Lounge			L3	15	3	45	0
S-4-Lounge 01&02	Lounge			L1	34	2	68	0
S-4-Lounge 01&02	Lounge			L2	18.5	1	18.5	0
S-4-Lounge 01&02	Lounge			L4	10	1	10	0
S-5-Storage Area	Commercial Industrial Warehouse			L2	18.5	3	55.5	0
							Lighting Control Credits (Conditioned) Total (Watts)	**0**

K4. INDOOR CONDITIONED LIGHTING MANDATORY LIGHTING CONTROL

1	2
NA	Required

3	4	5	6	7	8	9
Bathroom	Restroom	Required	Exempt	Required	NA	NA

Lounge 3	LoungeBreakRoom	Required	Exempt	Required	Required	Required
Lounge 1 & 2	LoungeBreakRoom	Required	Exempt	Required	NA	NA
Bar & Kitchen	KitchenetteResidentialKitchen	Required	Required	Required	NA	NA
Storage	CommercialIndustrialWarehouse	Required	Exempt	Required	NA	NA
Stairs	Stairwell	Required	Exempt	Required	NA	NA

L. DECLARATION OF REQUIRED CERTIFICATES OF INSTALLATION

Selections made by Documentation Author indicate which Certificates of Installation must be submitted for the features to be recognized for compliance. These documents must be retained and provided to the building inspector during construction and can be found online

Building Component	Form/Title
Envelope	NRCI-ENV-01-E - Must be submitted for all buildings
Mechanical	NRCI-MCH-01-E - Must be submitted for all buildings
Mechanical	NRCI-MCH-E - For all buildings with Mechanical Systems
Plumbing	NRCI-PLB-01-E - Must be submitted for all buildings
Plumbing	NRCI-PLB-E - For all buildings with Plumbing Systems
Indoor Lighting	NRCI-LTI-01-E - Must be submitted for all buildings
Indoor Lighting	NRCI-LTI-E - Indoor Lighting (for all buildings)

M. DECLARATION OF REQUIRED CERTIFICATES OF ACCEPTANCE

Selections made by Documentation Author indicate which Certificates of Acceptance must be submitted for the features to be recognized for compliance. These documents must be provided to the building inspector during construction and must be completed through an Acceptance Test Technician Certification Provider (ATTCP). For more information visit: https://www.energy.ca.gov/title24/2019standards/2019_compliance_documents/Nonresidential_Documents/NRCA/

Building Component	Form/Title
Envelope	NRCA-ENV-02-F - NRFC label verification for fenestration
Indoor Lighting	NRCA-LTI-02-A - Occupancy Sensors and Automatic Time Switch Controls.
Indoor Lighting	NRCA-LTI-03-A - Automatic Daylight Controls.
Mechanical	NRCA-MCH-02-A - Outdoor Air must be submitted for all newly installed HVAC units. Note: MCH-02-A can be performed in conjunction with MCH-07-A Supply Fan VFD Acceptance (if applicable) since testing activities overlap
Mechanical	NRCA-MCH-03-A - Constant Volume Single Zone HVAC

M. DECLARATION OF REQUIRED CERTIFICATES OF ACCEPTANCE

Selections made by Documentation Author indicate which Certificates of Acceptance must be submitted for the features to be recognized for compliance. These documents must be provided to the building inspector during construction and must be completed through an Acceptance Test Technician Certification Provider (ATTCP). For more information visit: https://www.energy.ca.gov/title24/2019standards/2019_compliance_documents/Nonresidential_Documents/NRCA/

Building Component	Form/Title
Mechanical	NRCA-MCH-21-H Multifamily Envelope

N. DECLARATION OF REQUIRED CERTIFICATES OF VERIFICATION

Selections made by Documentation Author indicate which Certificates of Verification must be submitted for the features to be recognized for compliance. These documents must be retained and provided to the building inspector during construction and can be found online

Building Component	Form/Title
Mechanical	NRCV-MCH-24 Enclosure Air Leakaage

Documentation Author's Declaration Statement

1. I certify that this Certificate of Compliance documentation is accurate and complete.

Documentation Author Name: Mohamad Nohayli	Documentation Author Signature: **MOHAMAD NOHAYLI**
Company: InnoDez, Inc.	Signature Date: **2023-02-10**
Address: **FOXBROUGH PL**	CEA/HERS Certification Identification (if applicable):
City/State/Zip: **PLEASANTON, CA 94566**	Phone:

Responsible Person's Declaration statement

2. I certify the following under penalty of perjury, under the laws of the State of California:

1. The information provided on this Certificate of Compliance is true and correct.
2. I am eligible under Division 3 of the Business and Professions Code to accept responsibility for the building design or system design identified on this Certificate of Compliance (responsible designer)
3. The energy features and performance specifications, materials, components, and manufactured devices for the building design or system design identified on this Certificate of Compliance conform to the requirements of Title 24, Part 1 and Part 6 of the California Code of Regulations.
4. The building design features or system design features identified on this Certificate of Compliance are consistent with the information provided on other applicable compliance documents, worksheets, calculations, plans and specifications submitted to the enforcement agency for approval with this building permit application.
5. I understand that a registered copy of this Certificate of Compliance shall be made available with the building permit(s) issued for the building, and made available to the enforcement agency for all applicable inspections, and I will take the necessary steps to accomplish this requirement.
6. I understand that a registered copy of this Certificate of Compliance is required to be included with the documentation the builder provides to the building owner at occupancy, and I will take the necessary steps to accomplish these requirements.

Responsible Designer Name: Syed P. Alam	Responsible Designer Signature: **Syed Alam**	
Company: Innodez		
Address: Foxbrough pl	Date Signed: **2023-02-10**	
City/State/Zip: Pleasanton, CA 94566	License #: 27087	
Phone: (424) 414-0997	Title: **PE ENGINEER**	Scope: **MECHANICAL**
Responsible Designer Name: Syed P. Alam	Responsible Designer Signature: **Syed Alam**	
Company: Innodez		
Address: Foxbrough pl	Date Signed: **2023-02-10**	
City/State/Zip: Pleasanton, CA 94566	License #: 27087	
Phone: (424) 414-0997	Title: **PE ENGINEER**	Scope: **MECHANICAL**

Responsible Designer Name: Syed P. Alam	Responsible Designer Signature: **Syed Alam**	
Company: Innodez		
Address: Foxbrough pl	Date Signed: **2023-02-10**	
City/State/Zip: Pleasanton, CA 94566	License #: 27087	
Phone: (424) 414-0997	Title: **PE ENGINEER**	Scope: **MECHANICAL**

BCE COMPANY

CLIENT:

ADDRESS:

CONFIDENTIALITY STATEMENT:

ALL DRAWINGS AND WRITTEN MATERIALS APPEARING HEREIN CONSTITUTE THE ORIGINAL AND UNPUBLISHED WORK OF THE DESIGNER AND THE SAME MAY NOT BE DUPLICATED, USED OR DISCLOSED WITHOUT CONSENT OF THE DESIGNER.

NOTES:

1. ALL DIMENSIONS HEREIN ARE IN IMPERIAL UNITS UNLESS STATED OTHERWISE.
2. THESE DRAWINGS ARE TO BE READ IN CONJUNCTION WITH ALL RELEVANT DESIGNER, ENGINEER OR SPECIALIST DRAWINGS AND SPECIFICATIONS.
3. THE CONTRACTOR MUST CHECK ALL DIMENSION AT SITE BEFORE COMMENCING WORK.
4. THE CONTRACTOR IS RESPONSIBLE FOR PROVIDING ALL NECESSARY TEMPORARY SUPPORT TO THE BUILDING AND ANY ADJACENT STRUCTURES.

REV. NO.	DESCRIPTION	DATE	BY

PROJECT:

TITLE:
T24-02

PROJ. NO.	PROJ. ENGR.	SCALE @ 24X36: NTS

DRAWING NO.
T 2 4 - 0 2

REV.