FIRE PROTECTION NOTES:

FIRE PROTECTION SUPPLY PIPE: ROUTE THE BUILDING FIRE MAIN TO THE WATER MAIN AND CONNECT TO THE SUPPLY LINE AT THE APPROPRIATE TIME AND LOCATION. CONTRACTOR SHALL FIELD VERIFY EXACT LOCATION OF WATER MAIN PRIOR TO START OF CONSTRUCTION.

WORK INCLUDES BUT IS NOT LIMITED TO:

1. INSTALLING A COMPLETE WET SYSTEM DESIGNED THROUGHOUT THE BUILDING .

RELATED WORK SPECIFIED ELSEWHERE:

1. WIRING OF FLOW ALARM SWITCHES AND TAMPER SWITCHES AND CONNECTION OF SWITCHES TO BUILDING ALARM SYSTEM ARE SPECIFIED IN ELECTRICAL DOCUMENTS.

SPRINKLER DESIGN REQUIREMENTS: (FOR LIGHT HAZARD):

2. THE CONTRACTOR SHALL SUBMIT 4 COMPLETE SETS OF SPRINKLER SHOP DRAWINGS AND HYDRAULIC CALCULATIONS TO THE ARCHITECT FOR REVIEW, PRIOR TO ORDERING MATERIAL AND/OR CUTTING PIPE. CONTRACTOR SHALL NOT CUT ANY PIPING UNTIL SHOP DRAWINGS HAVE BEEN REVIEWED AND ACCEPTED. THE CONTRACTOR SHALL SHOW IN DASHED LINES THE LOCATION OF ALL DUCTWORK, LIGHTS AND DIFFUSERS.
3. THE CONTRACTOR SHALL BE RESPONSIBLE FOR COORDINATING SPRINKLER PIPING AND HEADS LOCATIONS WITH OTHER TRADES. CONTRACTOR SHALL RELOCATE SPRINKLER PIPING AND HEADS AS NECESSARY IN ORDER TO AVOID CONFLICT WITH DUCTWORK, LIGHTS AND STRUCTURE.
4. PROVIDE AUXILIARY DRAINS AT LOW POINTS IN SYSTEM AND FOR TRAPPED SECTIONS AS REQUIRED BY NFPA-13. LOCATE AUXILIARY DRAINS IN MECHANICAL CLOSETS OR OTHER LOCATIONS OUT OF SIGHT.
5. THE CONTRACTOR SHALL INCLUDE A TEN POUND (10 PSI) BUFFER IN THE HYDRAULIC CALCULATIONS, I.E. THE PRESSURE REQUIRED FOR THE SPRINKLER SYSTEM (INCLUDING HOSE STREAM) SHALL BE A MINIMUM OF 10 PSI LESS THAN THE AVAILABLE PRESSURE AT THE REQUIRED FLOW.
6. THE CONTRACTOR SHALL PERFORM A FLOW TEST PRIOR TO COMMENCING DESIGN AND SHALL PROVIDE TEST INFORMATION TO THE ARCHITECT FOR APPROVAL. SPRINKLER SYSTEM DESIGN SHALL BE BASED UPON THE CONTRACTOR'S FLOW TEST.

QUALITY CRITERIA:

PERMITS, LICENSES, INSPECTION FEES:

1. OBTAIN AND PAY FOR PERMITS, LICENSES AND INSPECTION FEES AS MAY BE REQUIRED FOR PERFORMANCE AND APPROVAL OF THE WORK PERFORMED UNDER THIS SECTION OF THE SPECIFICATIONS.
2. COMPLY WITH ALL REQUIREMENTS OF NFPA 13 AND THE STATE FIRE MARSHALL AND LOCAL CODES.

MATERIALS: MATERIALS SPECIFIED BY MANUFACTURER'S NAME SHALL BE USED UNLESS PRIOR APPROVAL OF A SUBSTITUTE IS GIVEN BY ADDENDA.

SUBMITTALS:

BEFORE MATERIALS AND EQUIPMENT ARE PURCHASED, SUBMIT FOR ARCHITECT'S APPROVAL, A COMPLETE SCHEDULE OF MATERIALS AND EQUIPMENT TO BE INCORPORATED IN THE WORK. SUBMITTALS SHALL INCLUDE THE FOLLOWING:

1. COMPLETE SHOP DRAWINGS WITH HYDRAULIC CALCULATIONS
2. ALL VALVES
3. DRY PIPE VALVE AND ACCESSORIES
4. SPRINKLER HEADS
5. TAMPER SWITCHES
6. PIPE HANGERS AND SUPPORTS
7. PIPE AND FITTINGS
8. CABINETS
9. AIR COMPRESSOR
10. ALARM VALVE

GROOVED JOINT COUPLINGS AND FITTINGS SHALL BE SHOWN ON DRAWINGS AND PRODUCT SUBMITTALS, AND BE SPECIFICALLY IDENTIFIED WITH THE APPLICABLE STYLE NUMBER.

SPRINKLER HEADS SHALL BE REFERRED TO ON DRAWINGS, SUBMITTALS AND OTHER DOCUMENTATION, BY THE SPRINKLER IDENTIFICATION OR MODEL NUMBER AS SPECIFICALLY PUBLISHED IN THE APPROPRIATE AGENCY LISTING OR APPROVAL. TRADE NAMES OR OTHER ABBREVIATED DESIGNATIONS SHALL NOT BE ALLOWED.

TESTING PIPE SYSTEMS:

TESTS SHALL BE CONDUCTED IN THE PRESENCE OF THE ARCHITECT OR HIS DESIGNATED REPRESENTATIVE. EQUIPMENT, MATERIALS, AND INSTRUMENTS FOR TESTING SHALL BE FURNISHED BY THE CONTRACTOR WITHOUT ADDITIONAL COST TO THE OWNER.

AUTOMATIC SPRINKLER PIPING: THE AUTOMATIC SPRINKLER SYSTEMS SHALL BE HYDROSTATICALLY TESTED IN THEIR ENTIRETY OR IN ZONES DEFINED BY SHUT-OFF VALVES. THE PIPING SHALL BE TESTED AT A PRESSURE OF 200 PSIG , MEASURED AT THE LOW POINT IN THE SYSTEM OR ZONE, AND SHALL BE PROVED TIGHT AT THIS PRESSURE FOR A PERIOD OF NOT LESS THAN TWO HOURS. LEAKS DETECTED SHALL BE REPAIRED BY TIGHTENING, REWELDING JOINTS, OR REPLACING DAMAGED PIPE OR FITTINGS. CAULKING OF JOINTS WILL NOT BE PERMITTED.

DRY PIPE AIR TEST: ALL DRY PIPE PIPING SHALL BE TESTED AT 40 PSIG AND ALLOWED TO STAND FOR 24 HOURS. ALL LEAKS WHICH ALLOW A LOSS OF PRESSURE OVER 1½ PSI SHALL BE REPAIRED.

COMPRESSED AIR SYSTEM: ALL PIPING SHALL BE PNEUMATICALLY TESTED AT A PRESSURE OF 150 PSIG FOR A PERIOD OF NOT LESS THAN 2 HOURS. NO LOSS IN PRESSURE WILL BE PERMITTED. LEAKS DETECTED SHALL BE REPAIRED BY TIGHTENING OR REPLACING PIPE AND FITTINGS. CAULKING OF JOINTS WILL NOT BE PERMITTED.

OPERATION AND MAINTENANCE INSTRUCTIONS:

OPERATING AND MAINTENANCE INSTRUCTIONS, PRINTED AND BOUND IN HARD COVER THREE RING LOOSE LEAF NOTEBOOKS, SHALL BE PROVIDED FOR EACH ITEM OF EQUIPMENT LISTED BELOW; 5 SEPARATE COPIES SHALL BE PROVIDED. EACH NOTEBOOK SHALL BE PROVIDED WITHIN AN IDENTIFYING LABEL UNDER A CLEAR PLASTIC COVER SHIELD ON THE FRONT COVER WHICH SHALL IDENTIFY THE PROJECT, ENGINEER, CONTRACTOR AND DATE.

1. NATIONAL FIRE PROTECTION ASSOCIATION PAMPHLET NO. 25. PHOTO COPIES ARE NOT ACCEPTABLE.
2. COPIES OF ALL APPROVED SUBMITTAL DATA (LISTED ABOVE UNDER SUBMITTALS).
3. AS-BUILT COPIES OF DESIGN DRAWINGS AND HYDRAULIC CALCULATIONS.

SEISMIC REQUIREMENTS:

PROVIDE SEISMIC PROTECTION FOR THE SPRINKLER SYSTEM. DESIGN AND INSTALL SEISMIC PROTECTION IN ACCORDANCE WITH THE REQUIREMENTS OF NFPA 13 SECTION TITLED "PROTECTION OF PIPING AGAINST DAMAGE WHERE SUBJECT TO EARTHQUAKES." SEISMIC REQUIREMENTS MAY BE WAIVED BY THE AUTHORITY HAVING JURISDICTION. PROVIDE WRITTEN DOCUMENTATION OF WAIVER.

GUARANTEE:

ALL EQUIPMENT SHALL BE GUARANTEED AS SPECIFIED UNDER THE GENERAL AND SPECIAL CONDITIONS. GUARANTEE ON ALL EQUIPMENT SHALL START AND COINCIDE WITH THE CONTRACTOR'S GUARANTEE OBLIGATIONS.

PIPE AND FITTINGS:

PIPE AND FITTINGS LISTED HEREIN SHALL BE FOR THE SERVICES INDICATED.

SPRINKLER AND STANDPIPE:

JOINTS:

MECHANICAL GROOVED JOINT COUPLINGS SHALL BE LISTED FOR USE IN FIRE PROTECTION SYSTEMS.

1. GROOVED END FITTINGS: FITTINGS SHALL BE DUCTILE IRON (ASTM A536); FORGED STEEL (ASTM A234); OR FABRICATED FROM CARBON STEEL PIPE (ASTM A53); WITH PRE-GROOVED ENDS FOR USE WITH MECHANICAL COUPLINGS OF THE SAME MANUFACTURER.
2. MECHANICAL COUPLINGS: COUPLING HOUSINGS SHALL BE DUCTILE IRON (ASTM A536). BOLTS AND NUTS SHALL BE CARBON STEEL TRACK-TYPE (ASTM A183), MINIMUM TENSILE 110,000 PSI. GASKETS SHALL BE GRADE "E" EPDM, FOR WATER SERVICES FROM -30 TO +230EF. AT JOINTS ALLOWING CONTROLLED MOVEMENT, EXPANSION, CONTRACTION OF DEFLECTION, FLEXIBLE COUPLINGS WITH SHALL BE USED. AT ALL JOINTS NOT REQUIRING FLEXIBILITY, A RIGID COUPLING SHALL BE USED.
   a. RIGID TYPE: COUPLING HOUSINGS CAST WITH OFFSETTING, ANGLE-PATTERN BOLT PADS SHALL BE USED TO PROVIDE SYSTEM RIGIDITY AND SUPPORT AND HANGING IN ACCORDANCE WITH NFPA 13.
   b. FLEXIBLE TYPE: USE IN LOCATIONS WHERE VIBRATION ATTENUATION AND STRESS RELIEF ARE REQUIRED.
3. FLANGE ADAPTER: FLAT FACE, FOR DIRECT CONNECTION TO ANSI CLASS 125 OR 150 FLANGED COMPONENTS

UNDERGROUND PIPE:

1. STANDARD WEIGHT DUCTILE IRON PIPE WITH MECHANICAL "BOLTED TYPE" JOINTS.
2. PROVIDE TIE RODS AND THRUST BLOCKS AT EACH CHANGE OF DIRECTION OF THE UNDERGROUND FIRE SERVICE PIPING. INSTALL TIE RODS AND THRUST BLOCKS IN ACCORDANCE WITH NFPA-24 REQUIREMENTS.

FIRE DEPARTMENT VALVES:

VALVES:

1. VALVES OF THE SAME TYPE SHALL HAVE THE NAME OR TRADEMARK OF THE MANUFACTURERS AND THE WORKING PRESSURE STAMPED OR CAST ON THE VALVE BODY.
2. ALL VALVES INSTALLED IN HORIZONTAL LINES SHALL BE INSTALLED WITH THE STEMS HORIZONTAL OR ABOVE. VALVE HANDWHEELS SHALL BE ORIENTED, WHEN INSTALLED, TO PROVIDE MAXIMUM ACCESSIBILITY FOR OPERATION.
3. ALL VALVES REQUIRING PACKING SHALL BE DESIGNED AND CONSTRUCTED SUCH THAT THEY CAN BE REPACKED UNDER PRESSURE.
4. VALVE HANDWHEELS SHALL BE MALLEABLE IRON.
5. FIRE DEPARTMENT VALVES: FIRE DEPARTMENT ANGLE VALVES SHALL BE 2½" SIZE PRESSURE REDUCING TYPE COMPLETE WITH CAP AND CHAIN. VALVES SHALL HAVE POLISHED BRASS FINISH AND SHALL BE ELKHART UP-25, POTTER-ROEMER 4085 OR EQUIVALENT BY NIBCO OR SIERRA.

SPRINKLER HEADS:

SPRINKLER HEADS SHALL BE GLASS-BULB TYPE. BODY SHALL BE DIE CAST BRASS, WITH HEX-SHAPED WRENCH BOSS CAST INTO THE BODY TO FACILITATE INSTALLATION AND REDUCE THE RISK OF DAMAGE DURING INSTALLATION.

SPRINKLER HEAD TYPES SHALL BE COORDINATED WITH THE ARCHITECT.

UPRIGHT SPRINKLER HEADS SHALL BE ½ INCH SPRAY TYPE WITH BRONZE FINISH. SPRINKLERS SHALL BE VIKING, CENTRAL SPRINKLER, RELIABLE, GRINNELL OR AUTOMATIC SPRINKLER.

CFC 2022 - 8.3.5 Thread Size Limitations:

Sprinklers having a K-factor exceeding K-5.6 (80) and having 1/2 in. (15 mm) National Pipe Thread (NPT) shall not be installed in new sprinkler systems.

PENDENT SPRINKLER HEADS UNLESS OTHERWISE INDICATED PENDENT SPRINKLER HEADS SHALL BE QUICK RESPONSE ½ INCH SPRAY TYPE WITH CHROME PLATED FINISH AND WHITE ESCUTCHEON PLATE. SPRINKLERS SHALL BE VIKING, CENTRAL SPRINKLER, RELIABLE, GRINNELL OR AUTOMATIC SPRINKLER.

SIDEWALL SPRINKLER HEADS SHALL BE QUICK RESPONSE ½ SPRAY TYPE WITH CHROME PLATED FINISH AND WHITE ESCUTCHEON. SPRINKLERS SHALL BE VIKING, CENTRAL SPRINKLER, RELIABLE, GRINNELL OR AUTOMATIC SPRINKLER.

CONCEALED PENDENT SPRINKLER HEADS SHALL BE ½ INCH SPRAY TYPE WITH CHROME PLATED FINISH AND WHITE ESCUTCHEON AND CEILING PLAT. SPRINKLERS SHALL BE VIKING, CENTRAL SPRINKLER, RELIABLE, GRINNELL OR AUTOMATIC SPRINKLER.

HANGERS:

HANGERS FOR FIRE PROTECTION PIPING:

HANGER FOR 4" AND LARGER HORIZONTAL LINES SHALL BE CLEVIS TYPE HANGERS, B-LINE B-3100 OR EQUIVALENT BY ANVIL, OR ERICO.

HANGER FOR HORIZONTAL LINES UP TO 3½" SHALL BE BAND TYPE HANGERS, B-LINE MODEL B-3172 OR EQUIVALENT BY ANVIL, OR ERICO.

SUPPORTS FOR VERTICAL LINES PASSING THROUGH FLOOR SHALL BE RISER CLAMP TYPE, FEE & MASON FIG. NO. 241, CARPENTER AND PATTERSON NO. 126 OR EQUIVALENT BY B-LINE, ANVIL OR ERICO.

GENERAL:

UNLESS SPECIFICALLY STATED OTHERWISE, THE FIRE PROTECTION SYSTEM SHALL CONFORM TO ALL OTHER SECTIONS OF THIS SPECIFICATION WHICH APPLY TO PIPE INSTALLATION, ACCESSORIES AND CONTROLS.

ALL THREADED HOSE OUTLETS SHALL COMPLY WITH THE LOCAL FIRE DEPARTMENT REQUIREMENTS.

ALL SHOP DRAWINGS SUBMITTED ON ITEMS REQUIRING UNDERWRITERS' LISTING SHALL BEAR EVIDENCE OF UNDERWRITERS' APPROVAL.

ALL EXPOSED FIRE SYSTEM PIPING INCLUDING VALVE ROOM PIPING SHALL BE CLEANED OF RUST, GREASE AND SCALED AND SHALL BE PROVIDED WITH A FIELD APPLIED PRIME COAT AND TWO COATS OF AN OIL BASED ENAMEL PAINT. COLOR SHALL BE RED OR AS DIRECTED BY ARCHITECT.

THE CONTRACTOR SHALL PERFORM ALL TESTS OF FIRE PROTECTION SYSTEMS AS REQUIRED BY GOVERNING CODES AND LOCAL AUTHORITIES AT NO ADDITIONAL COST TO THE OWNER. TESTS SHALL BE PERFORMED IN THE PRESENCE OF THE OWNERS REPRESENTATIVE.

INSTALLATION:

INSTALL SPRINKLER PIPING WITH A SLOPE TO VALVE ROOM AND TO AUXILIARY LOW POINT DRAINS AS REQUIRED BY NFPA 13.

COORDINATE SPRINKLER INSTALLATION WITH BUILDING STRUCTURE AND OTHER TRADES.

ROUTE [DRY PIPE] [ALARM] VALVE DRAINS TO [OUTSIDE BUILDING] [FLOOR DRAIN] AND TERMINATE 9" AFG.

VERIFY LOCATIONS OF LIGHTS AND DIFFUSERS PRIOR TO INSTALLING SPRINKLER HEADS AND PIPING.

SPRINKLER HEADS SHALL BE INSTALLED ON CENTERLINE WITH LIGHTS, DIFFUSERS AND DOORS, IN LIVING UNITS.
CEILING THE SPRINKLER HEADS SHALL BE INSTALLED IN THE CENTER OF 2' X 2' TILES AND IN THE CENTER OF THE ½ TILE IN 2' X 4' TILES.

CONTRACTOR SHALL PURGE AIR FROM ALL WET PIPE SPRINKLER SYSTEM PIPING PRIOR TO FINAL SYSTEM COMPLETION.

INSTALL A SPARE SPRINKLER CABINET NEAR THE SPRINKLER RISER. PROVIDE NUMBER OF SPARE SPRINKLERS AS REQUIRED BY NFPA-13, WITH AT LEAST ONE SPARE FOR EACH TYPE OF HEAD INSTALLED.

THESE SHEETS ARE NOT APPROVED FOR THE INSTALLATION ANY UNDERGROUND FIRE PROTECTION SYSTEM PIPING. A SEPERATE SUBMITTAL TO THE CITY OF ARACADERO FIRE DEPARTMENT FOR REVIEW AND AAPROVAL IS REQUIRED BY THE INSTALLING C-16 LISCENSED FIRE PROTECTION CONTRACTOR PRIOR TO ANY DEMOLITION, MODIFICATION OR INSTALLATION OF ANY FIRE PROTECTION COMPONENTS. AS PER 2022 CFC 105.4, 105.7, 901.3, CH.80,2016 NFPA 14 & CBC 107.2.1

BCE COMPANY

NO.	DATE	DESCRIPTION
1		
2		
3		
4		
5		
6		
7		
8		
9		
10		
11		
12		

SEAL:

DEVELOPMENT INFORMATION:

SITE ADDRESS:

DESIGNED BY:	
CHECKED BY:	
DRAWN BY:	MJ
DATE: 05/2023	PROJECT NO:

DRAWING TITLE:

FIRE PROTECTION GENERAL NOTES.

SHEET NO:

F 0.01

2022 CALIFORNIA FIRE CODE - TITLE 24, PART 9 with July Supplement;

SECTION 703: PENETRATIONS

MATERIALS AND FIRE STOP SYSTEMS USED TO PROTECT MEMBRANE AND THROUGH PENETRATIONS IN FIRE-RESISTANCE-RATED CONSTRUCTION AND CONSTRUCTION INSTALLED TO RESIST THE PASSAGE OF SMOKE SHALL BE MAINTAINED. THE MATERIALS AND FIRESTOP SYSTEMS SHALL BE SECURELY ATTACHED TO OR BONDED TO THE CONSTRUCTION BEING PENETRATED WITH NO OPENINGS VISIBLE THROUGH OR INTO THE CAVITY OF THE CONSTRUCTION. WHERE THE SYSTEM DESIGN NUMBER IS KNOWN, THE SYSTEM SHALL BE INSPECTED TO THE LISTING CRITERIA AND MANUFACTURER'S INSTALLATION INSTRUCTIONS.

CHAPTER 23: MOTOR-FUEL-DISPENSING FACILITIES AND REPAIR GARAGES

SECTION 2301: GENERAL - SCOPE

AUTOMOTIVE MOTOR-FUEL-DISPENSING FACILITIES, MARINE MOTOR FUEL-DISPENSING FACILITIES, FLEET VEHICLE MOTOR FUEL-DISPENSING FACILITIES, AIRCRAFT MOTOR VEHICLE FUEL-DISPENSING FACILITIES AND REPAIR GARAGES SHALL BE IN ACCORDANCE WITH THIS CHAPTER AND THE *CALIFORNIA BUILDING CODE*, INTERNATIONAL FUEL GAS CODE AND *CALIFORNIA MECHANICAL CODE*, SUCH OPERATIONS SHALL INCLUDE BOTH THOSE THAT ARE OPEN TO THE PUBLIC AND PRIVATE OPERATIONS.

SECTION 2305: OPERATIONAL REQUIREMENTS

2305.2.4. EMERGENCY SHUTOFF VALVES.

AUTOMATIC EMERGENCY SHUTOFF VALVES REQUIRED BY SECTION 2306.7.4 SHALL BE CHECKED NOT LESS THAN ONCE PER YEAR BY MANUALLY TRIPPING THE HOLD-OPEN LINKAGE.

2305.5 FIRE EXTINGUISHERS.

APPROVED PORTABLE FIRE EXTINGUISHERS COMPLYING WITH SECTION 906 WITH A MINIMUM RATING OF 2-A:20-B:C SHALL BE PROVIDED AND LOCATED SUCH THAT AN EXTINGUISHER IS NOT MORE THAN 75 FEET (22,860 mm) FROM PUMPS, DISPENSERS OR STORAGE TANK FILL-PIPE OPENINGS.

2305.6 WARNING SIGNS.

WARNING SIGN SHALL BE CONSPICUOUSLY POSTED WITHIN SIGHT OF EACH DISPENSER IN THE FUEL-DISPENSING AREA AND SHALL STATE THE FOLLOWING:

1. NO SMOKING
2. SHUT OFF MOTOR
3. DISCHARGE YOUR STATIC ELECTRICITY BEFORE FUELING BY TOUCHING A METAL SURFACE AWAY FROM THE NOZZLE.
4. TO PREVENT STATIC CHARGE, DO NOT REENTER YOUR VEHICLE WHILE GASOLINE IS PUMPING
5. IF A FIRE STARTS, DO NOT REMOVE NOZZLE-BACK AWAY IMMEDIATELY.
6. IT IS UNLAWFUL AND DANGEROUS TO DISPENSE GASOLINE INTO UNAPPROVED CONTAINERS.
7. NO FILLING OF PORTABLE CONTAINERS IN OR ON A MOTOR VEHICLE. PLACE CONTAINER ON GROUND BEFORE FILLING.

NFPA 13: STANDARD FOR THE INSTALLATION OF SPRINKLER SYSTEMS - 2022

ANNEX A: EXPLANATORY MATERIAL

MATERIALS AND FIRE STOP SYSTEMS USED TO PROTECT MEMBRANE AND THROUGH PENETRATIONS IN FIRE-RESISTANCE-RATED CONSTRUCTION AND CONSTRUCTION INSTALLED TO RESIST THE PASSAGE OF SMOKE SHALL BE MAINTAINED. THE MATERIALS AND FIRESTOP SYSTEMS SHALL BE SECURELY ATTACHED TO OR BONDED TO THE CONSTRUCTION BEING PENETRATED WITH NO OPENINGS VISIBLE THROUGH OR INTO THE CAVITY OF THE CONSTRUCTION. WHERE THE SYSTEM DESIGN NUMBER IS KNOWN, THE SYSTEM SHALL BE INSPECTED TO THE LISTING CRITERIA AND MANUFACTURER'S INSTALLATION INSTRUCTIONS.

PIPE SCHEDULE SIZING METHOD:

STEEL LIGHT HAZARD PIPE SCHEDULE	
PIPE SIZE	SPRINKLER HEADS
1" (25mm)	2 SPRINKLERS
1-1/4" (32mm)	3 SPRINKLERS
1-1/2" (40mm)	5 SPRINKLERS
2" (50mm)	10 SPRINKLERS
2-1/2" (65mm)	30 SPRINKLERS
3" (80mm)	60 SPRINKLERS
3-1/2"(90mm)	100 SPRINKLERS
NFPA 13 TABLE 27.5.2.2.1 LIGHT HAZARD PIPE SCHEDULE	

*HYDRAULIC CALCULATION HAS BEEN DONE FOR ALL PROJECTS WHICH SUPERSEDE THE ABOVE PIPE SCHEDULE.

*MAXIMUM VELOCITY WAS LIMITED TO 20 FT/SECONDS. HOWEVER, NFPA 13 DOES NOT LIMIT THE VELOCITY WHEN USING HYDRAULIC CALCULATION METHOD.

STEEL ORDINARY HAZARD PIPE SCHEDULE	
PIPE SIZE	SPRINKLER HEADS
1" (25mm)	2 SPRINKLERS
1-1/4" (32mm)	3 SPRINKLERS
1-1/2" (40mm)	5 SPRINKLERS
2" (50mm)	10 SPRINKLERS
2-1/2" (65mm)	20 SPRINKLERS
3" (80mm)	40 SPRINKLERS
3-1/2"(90mm)	65 SPRINKLERS
4" (100mm)	100 SPRINKLERS
5" (125mm)	160 SPRINKLERS
6" (150mm)	275 SPRINKLERS
NFPA 13 TABLE 27.5.3.4 ORDINARY HAZARD PIPE SCHEDULE	

*HYDRAULIC CALCULATION HAS BEEN DONE FOR ALL PROJECTS WHICH SUPERSEDE THE ABOVE PIPE SCHEDULE.

*MAXIMUM VELOCITY WAS LIMITED TO 20 FT/SECONDS. HOWEVER, NFPA 13 DOES NOT LIMIT THE VELOCITY WHEN USING HYDRAULIC CALCULATION METHOD.

CHAPTER 23: MOTOR-FUEL-DISPENSING FACILITIES AND REPAIR GARAGES

SECTION 2301: GENERAL - SCOPE

A.4.3.2:

LIGHT HAZARD OCCUPANCIES INCLUDE OCCUPANCIES HAVING USES AND CONDIDTIONS SIMILAR TO THE FOLLOWING:

(12) OFFICES, INCLUDING DATA PROCESSING

A.4.3.3:

ORDINARY HAZARD (GROUP 2) OCCUPANCIES INCLUDE OCCUPANCIES HAVING USES AND CONDITIONS SIMILAR TO THE FOLLOWING:

(15) MERCANTILE

A.4.3.6:

EXTRA HAZARD (GROUP 2) OCCUPANCIES INCLUDE OCCUPANCIES HAVING USES AND CONDITIONS SIMILAR TO THE FOLLOWING:

(9) CAR STACKERS AND CAR LIFT SYSTEMS WITH 2 CARS STACKED VERTICALLY

CHAPTER 19: DESIGN APPOACHES

19.2.6 HOSE ALLOWANCE

WHEN HOSE VALVES FOR FIRE DEPARTMENT USE ARE ATTACHED TO WET PIPE SPRINKLER SYSTEM RISERS IN ACCORDANCE WITH 16.15.2, THE FOLLOWING SHALL APPLY:

(1) THE SPRINKLER SYSTEM DEMAND SHALL NOT BE REQUIRED TO BE ADDED TO STANDPIPE DEMAND AS DETERMINED FROM NFPA 14

(2) WHERE THE COMBINED SPRINKLER SYSTEM DEMAND AND HOSE STREAM ALLOWANCE OF TABKE 19.3.3.1.2 EXCEEDS THE REQUIREMENTS OF NFPA 14, THIS HIGHER DEMAND SHALL BE USED.

(3) FOR PARTIALLY SPRINKLERED BUILDINGS, THE SPRINKLER DEMAND, NOT ICLUDING HOSE STREAM ALLOWANCE, AS INDICATED IN FIGURE 19.3.3.1.1 SHALL BE ADDED TO THE REQUIREMENTS GICEN IN NFPA 14.

19.3 OCCUPANCY HAZARD FIRE CONTROL APPROACH FOR SPRAY SPRINKLERS

19.3.1 GENERAL:

THE WATER DEMAND REQUIREMENTS SHALL BE DETERMINED BY EITHER THE PIPE SCHEDULE METHOD IN ACCORDANCE WITH 19.3.2 OR THE HYDRAULIC CALCULATION METHOD IN ACCORDANCE WITH 19.3.3

19.3.1.24 CLASSIFICATIONS SHALL BE AS FOLLOWS:

(1) LIGHT HAZARD

(2) ORDINARY HAZARD (GROUP 1 AND 2)

(3) EXTRA HAZARD (GROUP 1 AND 2)

(4) SPECIAL OCCUPANCY HAZARD *(SEE CHAPTER 26)*

19.3.3 WATER DEMAND REQUIREMENTS - HYDRAULIC CALCULATION METHODS.

19.3.3.1 GENERAL:

THE WATER DEMAND FOR SPRINKLERS SHALL BE DETERMINED ONLY FROM ONE OF THE FOLLOWING, AT THE DISCRETION OF THE DESIGNER:

(1) DENSITY/AREA CURVES OF FIGURE 19.3.3.1.1 IN ACCORDANCE WITH THE DENSITY/AREA METHOD OD 19.3.3.2.

(2) THE ROOM THAT CREATES THE GREATEST DEMAND IN ACCORDANCE WITH THE ROOM DESIGN METHOD OF 19.3.3.4

(3) SPECIAL DESIGN AREAS IN ACCORDANCE WITH 19.3.3.4

FIGURE 19.3.3.1.1 DENSITY/AREA CURVES:

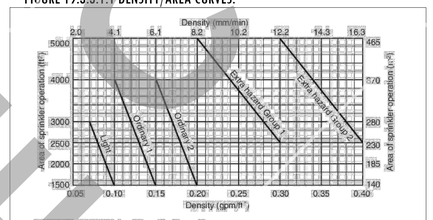

FIGURE 19.3.3.1.1 Density/Area Curves.

19.3.3.2 DENSITY/AREA METHOD.

19.3.3.2.1 WATER SUPPLY:

198.1.32.1.1: THE WTAER SUPPLY REQUIREMENT FOR SPRINKLERS ONLY SHALL BE CALUCLATED FROM THE DENSITY/AREA CURVES OF FIGUIRE 19.3.3.1.1 OF FROM CHAPTER 26 WHERE DENSITY/AREA CRITERIA ARE SPECIFIED FOR SPECIAL OCCUPANCY HAZARDS.

302.1 Occupancy Classification:
Occupancy classification is the formal designation of the primary purpose of the building, structure or portion thereof. Structures shall be classified into one or more of the occupancy groups listed in this section based on the nature of the hazards and risks to building occupants generally associated with the intended purpose of the building or structure. An area, room or space that is intended to be occupied at different times for different purposes shall comply with all applicable requirements associated with such potential multipurpose. Structures containing multiple occupancy groups shall comply with Section 508. Where a structure is proposed for a purpose that is not specifically listed in this section, such structure shall be classified in the occupancy it most nearly resembles based on the fire safety and relative hazard. Occupied roofs shall be classified in the group that the occupancy most nearly resembles, according to the fire safety and relative hazard, and shall comply with Section 503.1.4.

Assembly (see Section 303): Groups A-1, A-2, A-3, A-4 and A-5.
Business (see Section 304): Group B.
[SFM] Organized Camps (see Section 450): Group C.
Educational (see Section 305): Group E.
Factory and Industrial (see Section 306): Groups F-1 and F-2.
High Hazard (see Section 307): Groups H-1, H-2, H-3, H-4 and H-5.
Institutional (see Section 308): Groups I-2, I-2.1, I-3 and I-4.
[SFM] Laboratory (see Section 202): Group B, unless classified as Group L (see Section 453) or Group H (see Section 307).
[SFM] Laboratory Suites (see Section 453): Group L.
Mercantile (see Section 309): Group M.
Residential (see Section 310): Groups R-1, R-2, R-2.1, R-3, R-3.1 and R-4.
Storage (see Section 311): Groups S-1 and S-2.
Utility and Miscellaneous (see Section 312): Group U.
[SFM] Existing buildings housing existing protective social care homes or facilities established prior to 1972 (see California Fire Code Chapter 11 and California Existing Building Code).

5703.6.2Design and fabrication of piping systems and components:
Piping system components shall be designed and fabricated in accordance with the applicable standard listed in Table 5703.6.2 and Chapter 27 of NFPA 30, except as modified by Section 5703.6.2.1 and 5703.6.2.2.

PIPING USE	STANDARD
POWER PIPING	ASME B31.1
PROCESS PIPING	ASME B31.3
PIPIELINE TRANSPORTATION SYSTEM FOR LIQUID HYDROCABONS AND OTHER LIQUIDS.	ASME B31.4
BUILDING SERVICE PIPING	ASME B31.9

5003.2.2Piping, tubing, valves and fittings:
Piping, tubing, valves, and fittings conveying hazardous materials shall be designed and installed in accordance with ASME B31 or other approved standards, and shall be in accordance with Sections 5003.2.2.1 and 5003.2.2.2.

5003.2.2.1Design and construction:
Piping, tubing, valves, fittings and related components used for hazardous materials shall be in accordance with the following:
1.Piping, tubing, valves, fittings and related components shall be designed and fabricated from materials that are compatible with the material to be contained and shall be of adequate strength and durability to withstand the pressure, structural and seismic stress and exposure to which they are subject.
2.Piping and tubing shall be identified in accordance with ASME A13.1 to indicate the material conveyed.
3.Manual valves or automatic remotely activated fail-safe emergency shutoff valves shall be installed on supply piping and tubing and provided with ready access at the following locations:
3.1.The point of use.
3.2.The tank, cylinder or bulk source.
4.Manual emergency shutoff valves and controls for remotely activated emergency shutoff valves shall be identified and the location shall have access clearly visible and indicated by means of a sign.
5.Backflow prevention or check valves shall be provided where the backflow of hazardous materials could create a hazardous condition or cause the unauthorized discharge of hazardous materials.
Exceptions:
1.Piping for inlet connections designed to prevent backflow.
2.Piping for pressure relief devices.

9.1 Hangers
9.1.1.1
Unless the requirements of 9.1.1.2 are met, types of hangers shall be in accordance with the requirements of Section 9.1.
9.1.1.2
Hangers certified by a registered professional engineer to include all of the following shall be an acceptable alternative to the requirements of Section 9.1:
Hangers shall be designed to support five times the weight of the water-filled pipe plus 250 lb (115 kg) at each point of piping support.
These points of support shall be adequate to support the system.
The spacing between hangers shall not exceed the value given for the type of pipe as indicated in Table 9.2.2.1(a) or Table 9.2.2.1(b).
Hanger components shall be ferrous.
Detailed calculations shall be submitted, when required by the reviewing authority, showing stresses developed in hangers, piping, and fittings, and safety factors allowed.
9.2.2.1
The maximum distance between hangers shall not exceed that specified in Table 9.2.2.1(a) or Table 9.2.2.1(b), except where the provisions of 9.2.4 apply.
Table 9.2.2.1(a) Maximum Distance Between Hangers (ft-in.)

Table 9.2.2.1(a)	NOMINAL PIPE SIZE (in.)											
	3/4	1	1-1/4	1-1/2	2	2-1/2	3	3-1/2	4	5	6	8
STEEL PIPE EXCEPT THREADED LIGHWALL	NA	12-0	12-0	15-0	15-0	15-0	15-0	15-0	15-0	15-0	15-0	15-0
THREADED LIGHTWALL STEEL PIPE	NA	12-0	12-0	12-0	12-0	12-0	12-0	NA	NA	NA	NA	NA
COPPER TUBE	8-0	8-0	10-0	10-0	12-0	12-0	12-0	15-0	15-0	15-0	15-0	15-0
CPVC	5-6	6-0	6-6	7-0	8-0	9-0	10-0	NA	NA	NA	NA	NA
DUCTILE-IRON PIPE	NA	NA	NA	NA	NA	NA	15-0	NA	15-0	NA	15-0	15-0

NA: NOT APPLICABLE

BCE COMPANY

NO.	DATE	DESCRIPTION
1		
2		
3		
4		
5		
6		
7		
8		
9		
10		
11		
12		

SEAL:

DEVELOPMENT INFORMATION:

SITE ADDRESS:

DESIGNED BY:
CHECKED BY:
DRAWN BY: MJ
DATE: 05/2023
PROJECT NO:

DRAWING TITLE:
FIRE PROTECTION CODE NOTES AND ANALYSIS.

SHEET NO:
F 0.02

BCE COMPANY

GENERAL NOTES

1. SYSTEM DESIGN AND INSTALLATION SHALL COMPLY NFDA 13 2022 AND LOCAL APPLICABLE CODES.
2. SYSTEM DESIGN BASIS: HYDRAULICALLY MOST DEMANDING 2 SPRINKLERS.
3. WATER SUPPLY:
   HYDRANT FLOW TEST: 150 GPM

   SYSTEM DEMAND:
   REQUIRED PRESSURE: 33.64 PSI
   TOTAL FLOW REQUIRED: 45.26 GPM
   SAFETY MARGIN UNDER
4. ALL PIPE SHALL BE U.D.N. UNDERGROUND – IPS POLLY PIPE RISER – CPVC OVERHEAD – CPVC
5. MANUFACTURERS OF RESIDENTIAL SPRINKLERS PUBLISH INFORMATION REGARDING THE SPACING OF THEIR SPRINKLERS WITH RESPECT TO HEAT PROUCING DEVICES (FIRE PLACES, RANGES, OVES, HEATING, VENTS, WATER HEATERS, FURNACES, ETC.) WHETHER OR NOT ALL HEAT PRODUCING DEVICES ARE SHOWN ON THE PLAN PROPER MINIMUM DISTANCES MUST BE MAINTAINED.
6. THE MINIMUM DISTANCE BETWEEN ANY 2 RESIDENTIAL SPRINKLERS ON THIS PRODUCT IS HYDRAULICALLY LIMITED TO 12 FEET. SPRIRNKLERS SHALL NT EXCEED 6 FEET FROM ANY WALL.
8. THE INIMUM DISTANCE A SPRINKLER CAN BE LOCATED FROM A WALL IS 4 INCHES.
9. PENDANT SPRINKLERS SHALL E A MINIMUM OF 36 FEET WAY FROM THE CENTER OF ANY OBSTRUCTIONS SUCH AS CEILING FANS AND LIGHT FIXTURES UNLESS THE REQUIREMENTS OF NFPA 13.3 8.2. ARE MET.
10. INSTALLATION OF ALL RESIDENTIAL SPRINKLERS SHALL BE IN STRICT COMPLIANCE WITH THE MANUFACTURERS INSTALLATION GUIDE.
11. PRIOR TO DRILLINGJOISTS, CONTACT STRUCTURAL ENGINEER FOR RECOMMENDED DRILLING GUIDELINES.

HANGER SPACING

PIPE MATERIAL	3/4"	1"	1-1/4"	1-1/2"	2"	2 1/2"	3"
COPPER	8	8	10	10	12	12	12
CPVC	5.5	6	6.5	7	8	9	10
SCHEDULE 40 &10 STEEL	•	12	12	15	15	15	15
THREADABLE THINWALL	•	12	12	12	12	12	12

HANGER NOTES

1. ALL LIGHTING SHOWN ARE THE MAXIMUM RECOMMENDED DISTANCE BETWEEN HANGERS EXPRESSED.
2. PROVIDE A HANGER ITHIN 6 INCHES OF ALL DROPS TO SPRINKLER HEADS WHEN USING CPVC PIPE.
3. + STEEL PIPE IS NOT ALLOWED IN SIZES LESS THAN 1 INCH.

SYMBOLS AND ABBREVIATIONS

NOTE: SPRINKLER SYMBOLS AND ABBREVIATIONS INDICATED IS FOR CONVENIENCE ONLY AND ITEMS INDICATED ARE NOT NECESSARILY WITHIN THE SCOPE OF THE WORK.

SYMBOL	DESCRIPTION	ABBREVIATIONS	
x	NODE NO		
	FIRE SPRINKLER		
SD	FIRE STANDPIPE PIPING	A.B.D.	AUTOMATIC BALL DRIP
SP	SPRINKLER PIPING (SP.)	A.D.	ACCESS DOOR
D	SPK DRAIN PIPING	CLG.	CEILING
		C.V.	CHECK VALVE
	OS & Y VALVE W/ LOCK AND CHAIN	D.C.D.A.	DOUBLE CHECK DETECTOR ASSEMBLY
	WATER FLOW SWITCH	DN.	DOWN
	CAPPED OUTLET	ELEV.	ELEVATION
	GATE VALVE (G.V.)	F.H.C.	FIRE HOSE CABINET
	LOCKSHIELD VALVE (GLOBE VALVE)	F.H.	FIRE HYDRANT
	CHECK VALVE (C.V.)	F.H.R.	FIRE HOSE RACK
	PRESSURE REGULATING VALVE	FL.	FLOOR
	STRAINER	G.V.	GATE VALVE
	SHOCK ABSORBER	H.C.	HUNG CEILING
	PRESSURE GAUGE	N.I.C.	NOT IN CONTRACT
		O.S.&Y.	OUTSIDE SCREW & YOKE
	UNION CONNECTION	P.O.	PLUGGED OUTLET
DCDA	DOUBLE CHECK DETECTOR ASSEMBLY	T.S.	TAMPER SWITCH
HV	HOSE VALVE	WFS	WATER FLOW SWITCH
HR	HOSE RACK		
SR	SPRINKLER RIG ASSEMBLY	TS	TAMPER SWITCH
RM	ROOF MANIFOLD	SPK	SPRINKLER

SPRINKLER HEAD SCHEDULE

SYMBOL	UPRIGHT	PENDANT	RECESSED (CORRISION RESISTANT)	DRY HORIZONTAL SIDEWALL	DRY PENDANT	EXTENDED COVERAGE SIDEWALL	CONCEALED PENDANT	CONCEALED DRY PENDANT	SIDEWALL	EXTENDED COVERAGE	EXIST SP HD TO BE REMOVED/RELOCATED	QUICK RESPONSE	GENERAL LOCATION OF SPRINKLER HEADS (REFER TO DRAWINGS FOR ACTUAL LOCATIONS)	NOTE: ALL FINISHES ARE SUBJECT TO APPROVAL BY ARCHITECT. TYPE/FINISH	MANUFACTURER MODEL No. & STYLE
☼		●											LIGHT HAZARD (OFFICE AREA) K=5.6	PENDENT AND RECESSED, STANDARD RESPONSE, STANDARD COVERAGE	TYCO – SERIES TY-L
◍		●											ORDINARY HAZARD GROUP 2 (MERCANTILE) K=8.0	PENDENT AND RECESSED, STANDARD RESPONSE, STANDARD COVERAGE	TYCO – SERIES TY-L
⊗		●										●	EXTRA HAZARD (CARWASH) K=14.0	PENDENT SPRINKLERS, EARLY SUPPRESSION, FAST RESPONSE	TYCO – MODEL ESFR-14

FIRE PROTECTION MATERIAL SCHEDULE

NOTES:
1. FOR REQUIRED PRESSURE RATINGS SEE RISER DIAGRAM.
2. ALL MATERIALS SELECTED ON THIS SCHEDULE MUST BE APPROVED BY THE LOCAL AUTHORITIES.
3. TO BE USED DOWNSTREAM OF SPRINKLER FLOOR CONTROL VALVE.
4. TO BE USED ON RISERS AND MAINS.

SYSTEM	PIPE: REQUIRED	DUCTILE IRON	EXTRA HEAVY CAST IRON	CPVC SDR 13.5	STEEL SCHED 30	STEEL SCHED 40	STEEL SCHED 80	BLACK	GALVANIZED	CEMENT LINED	FITTINGS: MALLEABLE IRON	CLASS D	LINED	BLACK	GALVANIZED	VICTAULIC	DUCTILE IRON	JOINTS: THREADED	MECH.JOINT–FLANGED	VICTAULIC	CAULKED
BURIED BUILDING FIRE SERVICE		●	●							●		●	●				●				●
SPRINKLER (SEE NOTE 3)				●							●					●	●	●	●	●	
SPRINKLER (SEE NOTE 4)				●							●					●	●	●	●	●	
SPRINKLER DRAIN PIPE				●		●			●						●			●			
FIRE STANDPIPE						●		●			●					●	●	●	●	●	

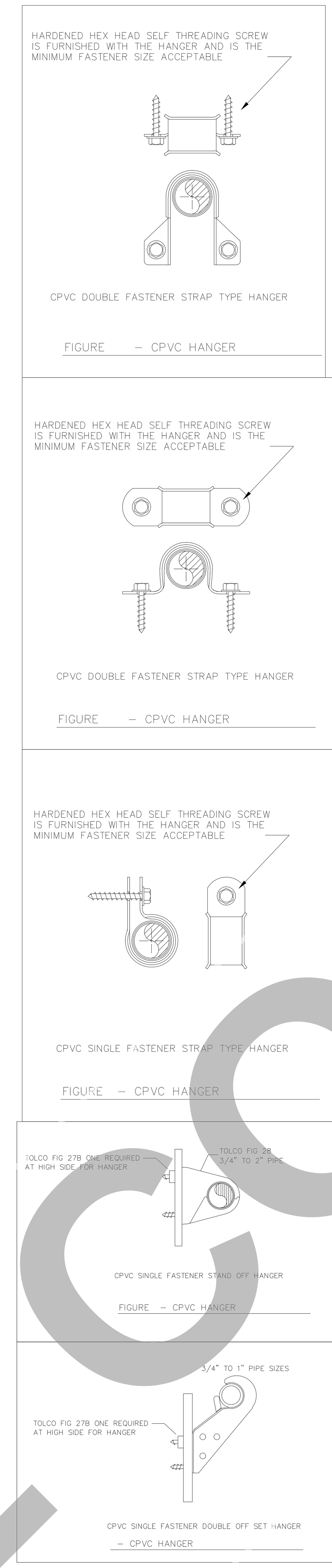

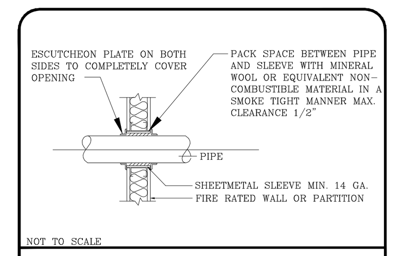

PIPE PENETRATION THRU FIRE RATED PARTITION

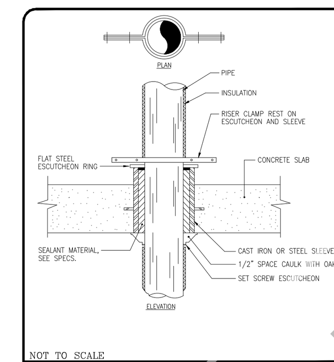

RISER CLAMP

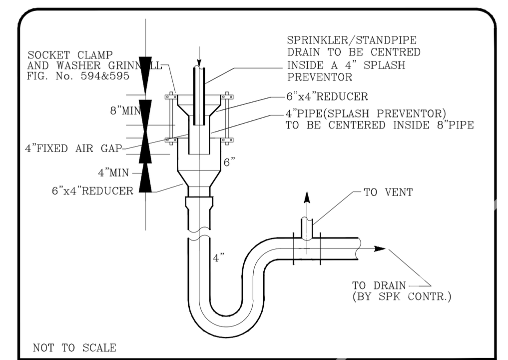

ANTI-SPLASH SPRINKLER DRAIN

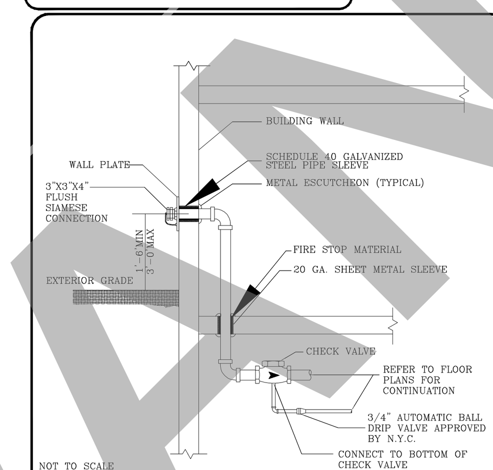

FIRE SIAMESE CONNECTION DETAIL

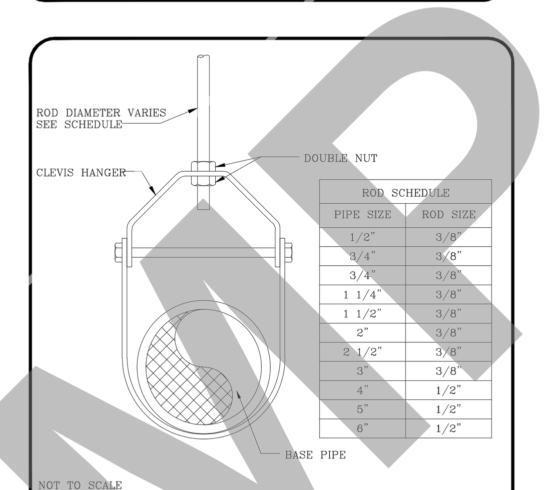

HANGER DETAIL

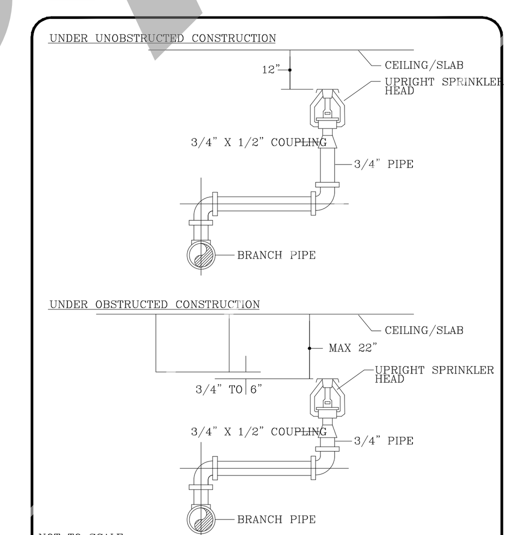

SPRINKLER HEAD DETAIL (UPRIGHT)

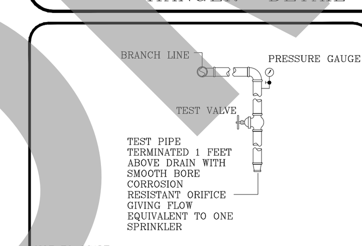

TYPICAL INSPECTOR TEST LINE

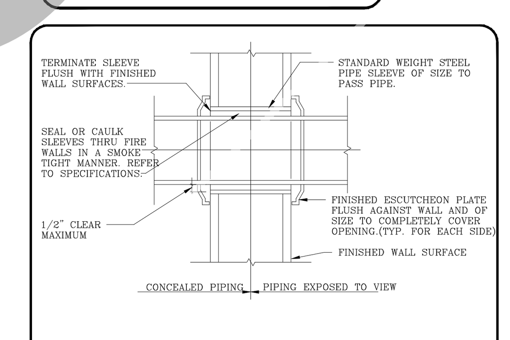

TYPICAL DETAIL OF PIPE INSTALLATION THRU RATED WALL

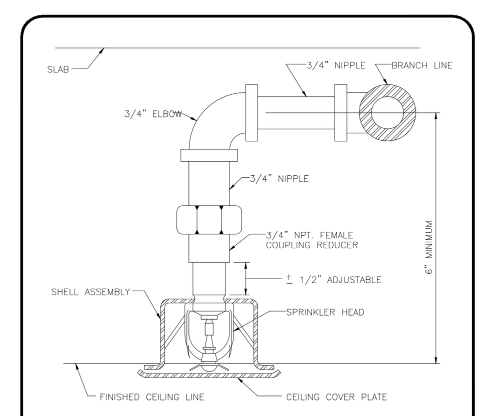

CONCEALED SPRINKLER HEAD BRANCHLINE CONNECTION

FIRE DETAIL
N.T.S

CPVC PIPING NOTES

1. SYSTEM DESIGN AND INSTALLATION TO MEET THE REQUIREMENTS OF 2016 NFPA 13 w/ CA AMENDMENTS. AND CITY OF ATESCADERO FIRE DEPARTMENT
2. THIS SYSTEM HAS BEEN HYDRAULICALLY CALCULATED TO PROVIDE 13 GPM @ TWO (2) REMOTE SPRINKLERS UTILIZING 16x6 COVERAGE OF THE TYCO CONC PENDENT (LFII) FIRE SPRINKLER OR (1) SPRNK AT 20 GPM USING 20X20 COVERAGE PER SPRINKLER
3. OBTAIN STRUCTURAL ENGINEERS APPROVAL BEFORE DRILLING ANY BEAMS.
4. ALL DIMENSIONS ARE +/- AND ARE A GUIDE FOR INSTALLATION ONLY.
5. CEILING HEIGHTS VARY AND ARE NOTED ON PLAN.
6. ALL PIPING SIZES IS 3/4" CPVC. SEE PLAN FOR ANY SIZING VARIATIONS. PROTECTION AGAINST FREEZING OF ALL PIPES, SPRINKLERS, AND VALVES IS THE RESPONSIBILTY OF THE OWNERS.
7. CPVC MAY BE RUN IN JOIST SPACES BETWEEN GYP. BOARD AND FLOOR PLY WITHOUT ADDED PROTECTION.
8. CPVC RUN IN UNSPRINKLERED AREAS SHALL BE COVERED OVER WITH COMMON INSULATION.
9. BRANCH LINES SHALL BE BRACED AT A DISTANCE OF SIX INCHES OR LESS FROM THE TEE OR ELBOW DROP TO THE SPRINKLER HEAD.
10. HANGER SPACING FOR 3/4" CPVC PIPE IS 6'-0" ON CENTER.
11. THE PIPE HANGER MUST HAVE A LOAD BEARING SURFACE AT LEAST 1/2 INCH WIDE OR PROVIDE SUPPORT IN TWO PLACES, SUCH AS A WRAP AROUND U-HANGER.
12. THE SYSTEM IS TO MEET THE REQUIREMENTS OF NFPA 13 AND CRC

SPACING REQUIREMENTS OF SPRINKLERS IN HEAT ZONES

MINIMUM DISTANCE	OBJECT
0–6	WATER HEATER
1–0	UNINSULATED PIPE
1–6	OVEN AND STOVE
2–0	CEILING DIFFUSER
5–0	FIREPLACE FRONT
3–0	FIREPLACE SIDES
1–6	UNINSULATED HEATING DUCT
1–6	WATER HEATER OR FURNACE FLUE
3–0	CEILING FAN

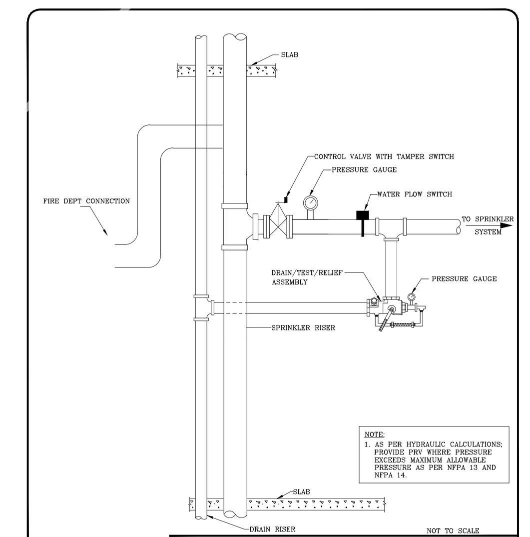

SPRINKLER VALVE ASSEMBLY WITH DRAIN RISER

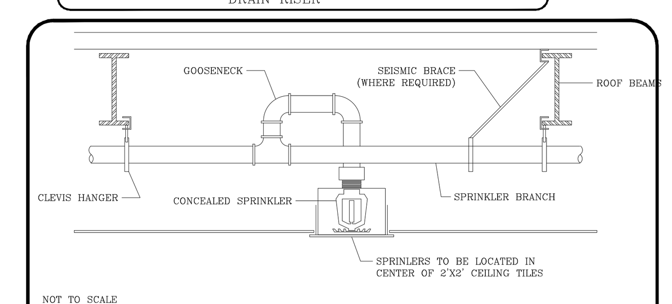

CONCEALED SPRINKLER INSTALLATION

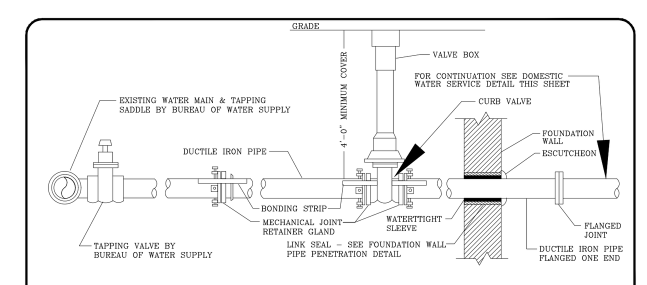

FIRE WATER VALVEBOX DETAIL

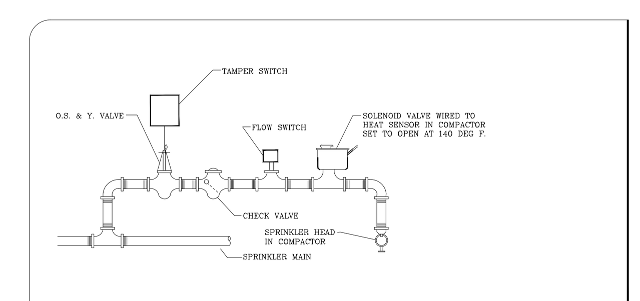

COMPACTOR SPRINKLER CONNECTION TO TO SPRINKLER MAIN DETAIL

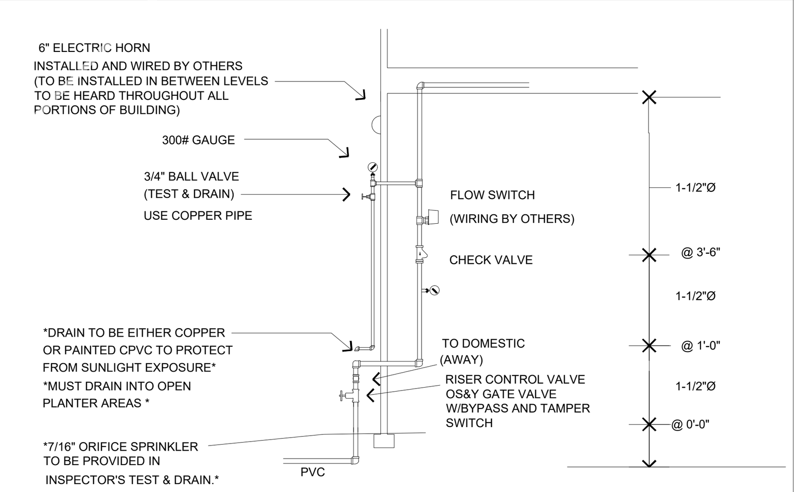

RISER DETAIL

NOT TO SCALE
*DETAIL IS SCHEMATIC ONLY. RISER IS LOCATED IN WALL,

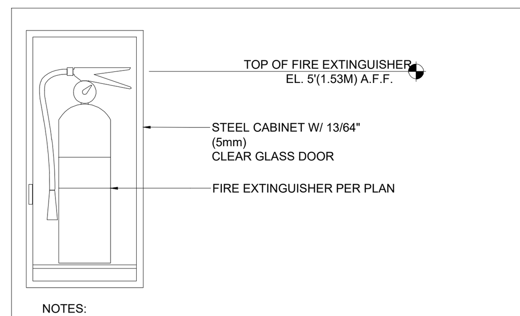

NOTES:
1. FIRE EXTINGUISHERS HAVING A GROSS WEIGHT NOT EXCEEDING 40 LBS(18.14 KG) SHALL BE INSTALLED SO THAT THE TOP OF THE FIRE EXTINGUISHER IS NOT MORE THAN 5'(1.53M) ABOVE THE FLOOR
2. STANDARD FIRE EXTINGUISHER CABINETS ARE NOT FIRE RATED. WHERE RECESSED OR SEMI RECESSED CABINETS ARE TO BE PROVIDED WITHIN FIRE RATED WALL ASSEMBLIES THE CAVITY SHOULD BE LINED TO MAINTAIN THE FIRE RATING OF THE WALL. CAVITY WALL LINING SHALL BE PROVIDED BY THE GENERAL CONTRACTOR.

1 M601 FIRE EXTINGUISHER CABINET
SCALE: N.T.S.

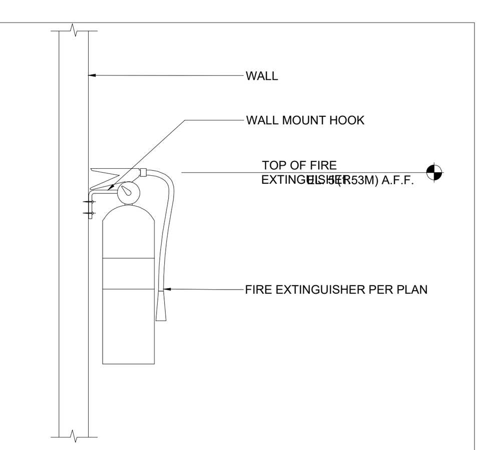

NOTE: FIRE EXTINGUISHERS HAVING A GROSS WEIGHT NOT EXCEEDING 40LBS(18.14KG) SHALL BE INSTALLED SO THAT THE TOP OF THE FIRE EXTINGUISHER IS NOT MORE THAN 5'(1.53M) ABOVE THE FLOOR

2 M601 FIRE EXTINGUISHER - WALL MOUNT HOOK

NO.	DATE	DESCRIPTION
1		
2		
3		
4		
5		
6		
7		
8		
9		
10		
11		
12		

SEAL:

DEVELOPMENT INFORMATION:

SITE ADDRESS:

DESIGNED BY:	
CHECKED BY:	
DRAWN BY:	MJ
DATE: 05/2023	PROJECT NO:

DRAWING TITLE:
FIRE PROTECTION LEGEND, SYMBOL AND GENERAL DETAILS.

SHEET NO:
F 0.03

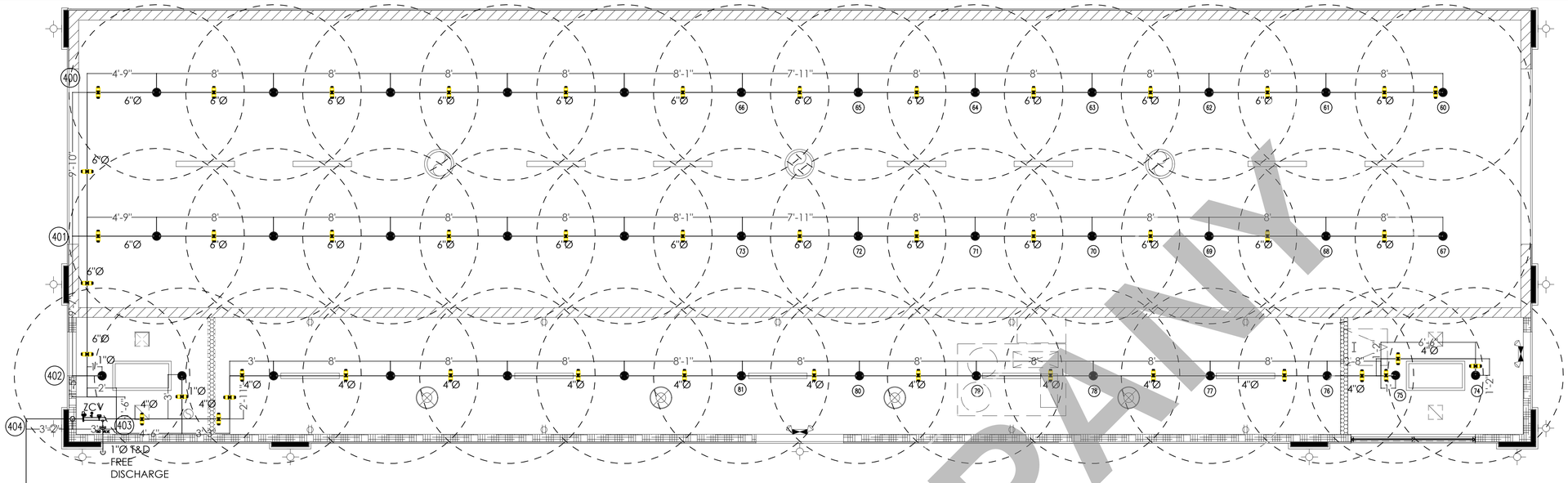

CAR WASH CEILING FIRE SPRINKLER PLAN

SCALE: 1/4"=1'-0"

CARWASH AREA:
- EXTRA HAZARD GROUP 2
- DENSITY = 0.3 gpm/ft²
- AREA = 1,950 ft²
- WORKING SPRINKLER: 18 (1,500 ft2)
- SPRINKLER K-FACTOR = 14.0
- SPRINKLER COVERAGE AREA = 130 ft²

MECHANICAL ROOM:
- ORDINARY GROUP 1 HAZARD
- DENSITY = 0.15 gpm/ft²
- AREA = 785 ft²
- WORKING SPRINKLER: 14 (1,500 ft2)
- SPRINKLER K-FACTOR = 8.0
- SPRINKLER COVERAGE AREA = 130 ft²

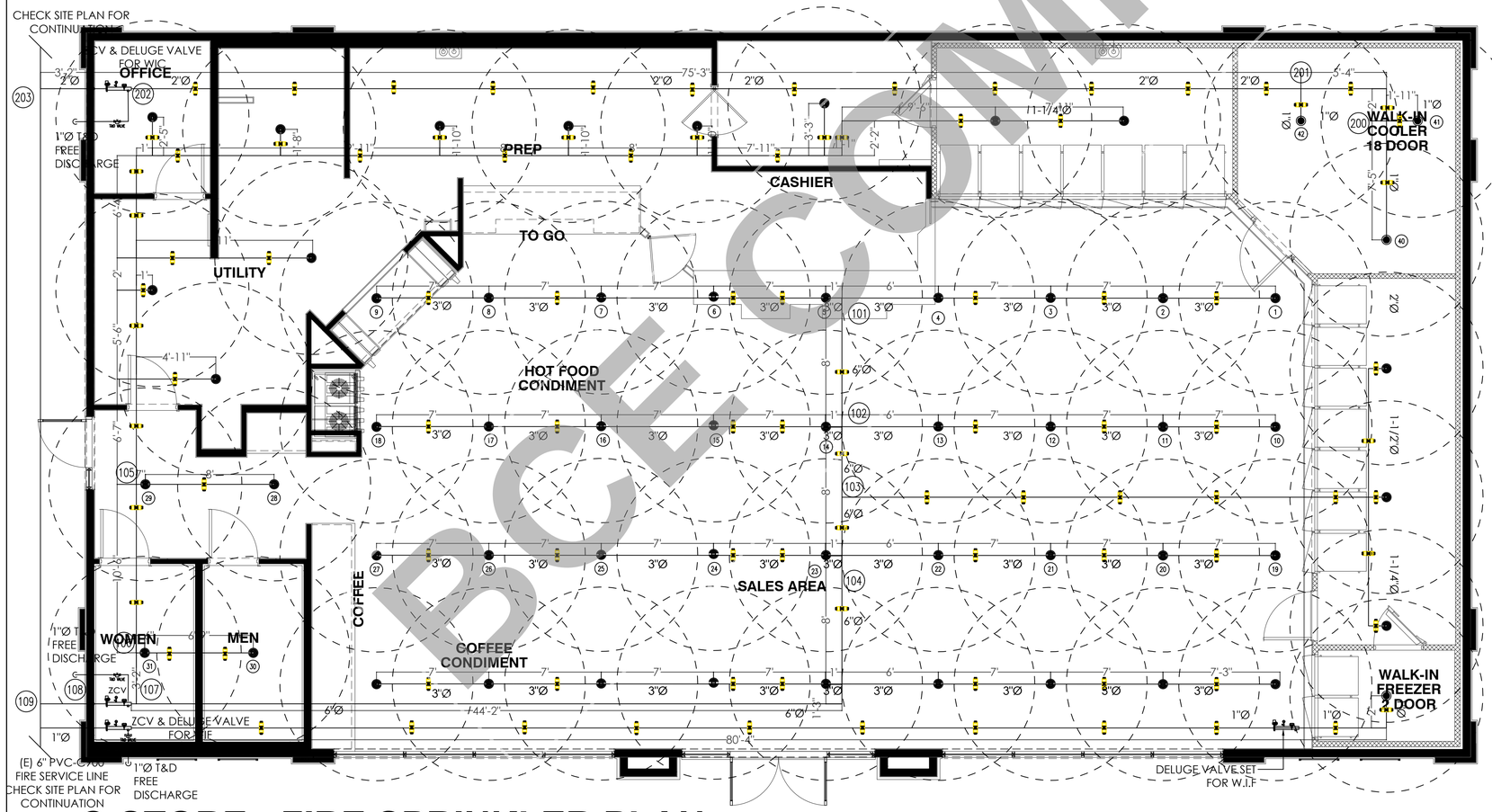

C-STORE - FIRE SPRINKLER PLAN

SCALE: 1/4"=1'-0"

Fire Control Room. An approved fire control room shall be provided for all buildings protected by an automatic fire extinguishing system. Fire control rooms shall meet the following requirements:
1. Fire control rooms shall contain only fire system control valves, fire alarm control panels and other related fire system equipment.
2. The location of the fire control room shall be approved by the fire code official.
3. Fire control rooms shall have minimum dimensions of five feet by seven feet.
4. Fire control rooms shall be constructed with a one-hour fire rating.
5. Fire control rooms shall be provided with an exterior access door approved by the fire code official.
6. Durable signage shall be provided on the exterior side of the access door.
7. Storage of materials in fire control rooms is prohibited.

FIRE DEPARTMENT ACCEPTANCE TESTING
1. All welded fittings shall be inspected prior to hanging the pipe. All welds shall bear the stamp of a certified welder.
2. All risers, mains, branch lines, fire sprinkler drops, earthquake bracing and other system components shall be inspected to verify that the installation conforms to the approved plans.
3. A hydrostatic pressure test of 200 psi for two hours shall be performed on all new systems. No loss of pressure or water leakage during the test period is permitted.
4. Persons conducting the test shall be ready for the test to begin at the scheduled appointment time, and all pumps, hose lines and other equipment shall be disconnected.
5. Where modification is made to an existing system affecting more than 20 sprinklers, the new portion shall be isolated and tested at not less than 200 psi for two hours. Modifications that cannot be isolated, such as relocated drops, shall require testing at system working pressure.
6. Portions of systems normally subjected to working pressure in excess of 150 psi shall be tested at a pressure of 50 psi in excess of system working pressure.
7. A main drain and inspector test drain test shall be performed during the final walk through of the system.
8. Fire pump acceptance testing shall be in accordance with the standards established by NFPA 20.
9. Standpipe and hose station acceptance testing shall be in accordance with NFPA 14.
10. A set of approved fire sprinkler plans shall be kept at the job site prior to initial inspection.
11. A final inspection is required prior to occupancy.

2016 NFPA 13 - CHAPTER 17
TABLE 17.4.2.1(a) MAXIMUM DISTANCE BETWEEN HANGERS (ft-in.)

	STEEL PIPE SIZE											
	3/4	1	1-1/4	1-1/2	2	2-1/2	3	3-1/2	4	5	6	8
STEEL PIPE EXCEPT THREADED LIGHTWALL	NA	12-0	12-0	15-0	15-0	15-0	15-0	15-0	15-0	15-0	15-0	15-0
THREADED LIGHTWALL STEEL PIPE	NA	12-0	12-0	12-0	12-0	12-0	12-0	NA	NA	NA	NA	NA
COPPER TUBE	8-0	8-0	10-0	10-0	12-0	12-0	12-0	15-0	15-0	15-0	15-0	15-0
CPVC	5-6	6-0	6-6	7-0	8-0	9-0	10-0	NA	NA	NA	NA	NA
DUCTILE-IRON PIPE	NA	NA	NA	NA	NA	NA	NA	NA	15-0	NA	15-0	15-0

2016 NFPA 13 - CHAPTER 17
17.4.3.4 UNSUPPORTED LENGTHS:
FOR STEEL PIPE, THE UNSUPPORTED HORIZONTAL LENGTH BETWEEN THE END OF SPRINKLER AND THE LAST HANGER ON THE LINE SHALL NOT BE GRETEAT THAN 63.0 in. (0.9m) FOR 1" PIPE (25mm), 48 in. (1.2m) FOR 1-1/4" (32mm) PIPE, AND 60 in. (1.5m) FOR 1-1/2" (40mm) OR LARGER PIPE.

SALES AREA:
- ORDINARY GROUP 2 HAZARD
- DENSITY = 0.2 gpm/ft²
- AREA = 2,550 ft²
- WORKING SPRINKLER: 31 (1,500 ft2)
- SPRINKLER K-FACTOR = 8.0
- SPRINKLER COVERAGE AREA = 113 to 130 ft²

UTILITY & PREP:
- ORDINARY GROUP 2 HAZARD
- DENSITY = 0.2 gpm/ft²
- AREA = 810 ft²
- WORKING SPRINKLER: 10 (1,500 ft2)
- SPRINKLER K-FACTOR = 8.0
- SPRINKLER COVERAGE AREA = 113 to 130 ft²

WALK-IN-FREEZER:
- LIGHT HAZARD
- DENSITY = 0.07 gpm/ft2
- AREA = 46 ft²
- WORKING SPRINKLER: 1
- TYPE: DRY
- SPRINKLER K-FACTOR = 5.6
- SPRINKLER COVERAGE AREA = 113 to 130 ft²

WALK-IN-COOLER:
- LIGHT HAZARD
- DENSITY = 0.07 gpm/ft2
- AREA = 50 ft²
- WORKING SPRINKLER: 1 (1,500 ft2)
- TYPE: DRY
- SPRINKLER K-FACTOR = 5.6
- SPRINKLER COVERAGE AREA = 113 to 130 ft²

NO.	DATE	DESCRIPTION
1		
2		
3		
4		
5		
6		
7		
8		
9		
10		
11		
12		

SEAL:

DEVELOPMENT INFORMATION:

SITE ADDRESS:

DESIGNED BY:
CHECKED BY:
DRAWN BY: MJ
DATE: 05/2023
PROJECT NO:

DRAWING TITLE:
FIRE SPRINKLERS PLANS FOR C-STORE AND CARWASH AREAS

SHEET NO:
F 1.01

BCE COMPANY

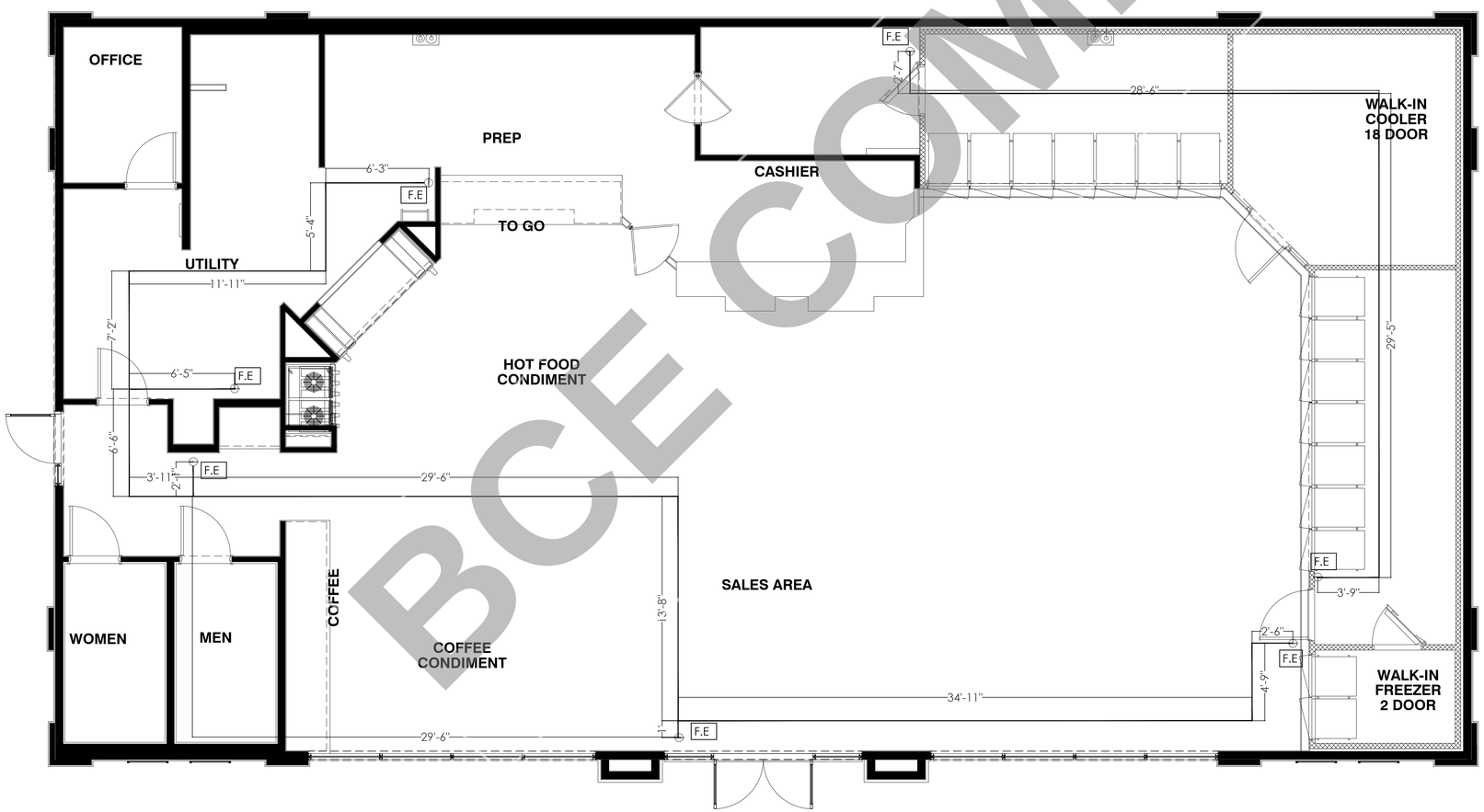

C-STORE - FIRE SPRINKLER PLAN

SCALE: 1/4"=1'-0"

BCE COMPANY

NO.	DATE	DESCRIPTION
1		
2		
3		
4		
5		
6		
7		
8		
9		
10		
11		
12		

SEAL:

DEVELOPMENT INFORMATION:

SITE ADDRESS:

DESIGNED BY:

CHECKED BY:

DRAWN BY: MJ

DATE: 05/2023

PROJECT NO:

DRAWING TITLE:
FIRE EXTINGUISHERS
C-STORE

SHEET NO:

F 1.02

CFC-2022 - 5706.4.10.1 PORTABLE FIRE EXTINGUISHERS:
PORTABLE FIRE EXTINGUISHERS WITH A RATING OF NOT LESS THAN 20-B AND COMPLYING WITH SECTION 906 SHALL BE LOCATED WITH 75 FT (22,860mm) OF HOSE CONNECTIONS, PUMPS AND SEPARATOR TANKS

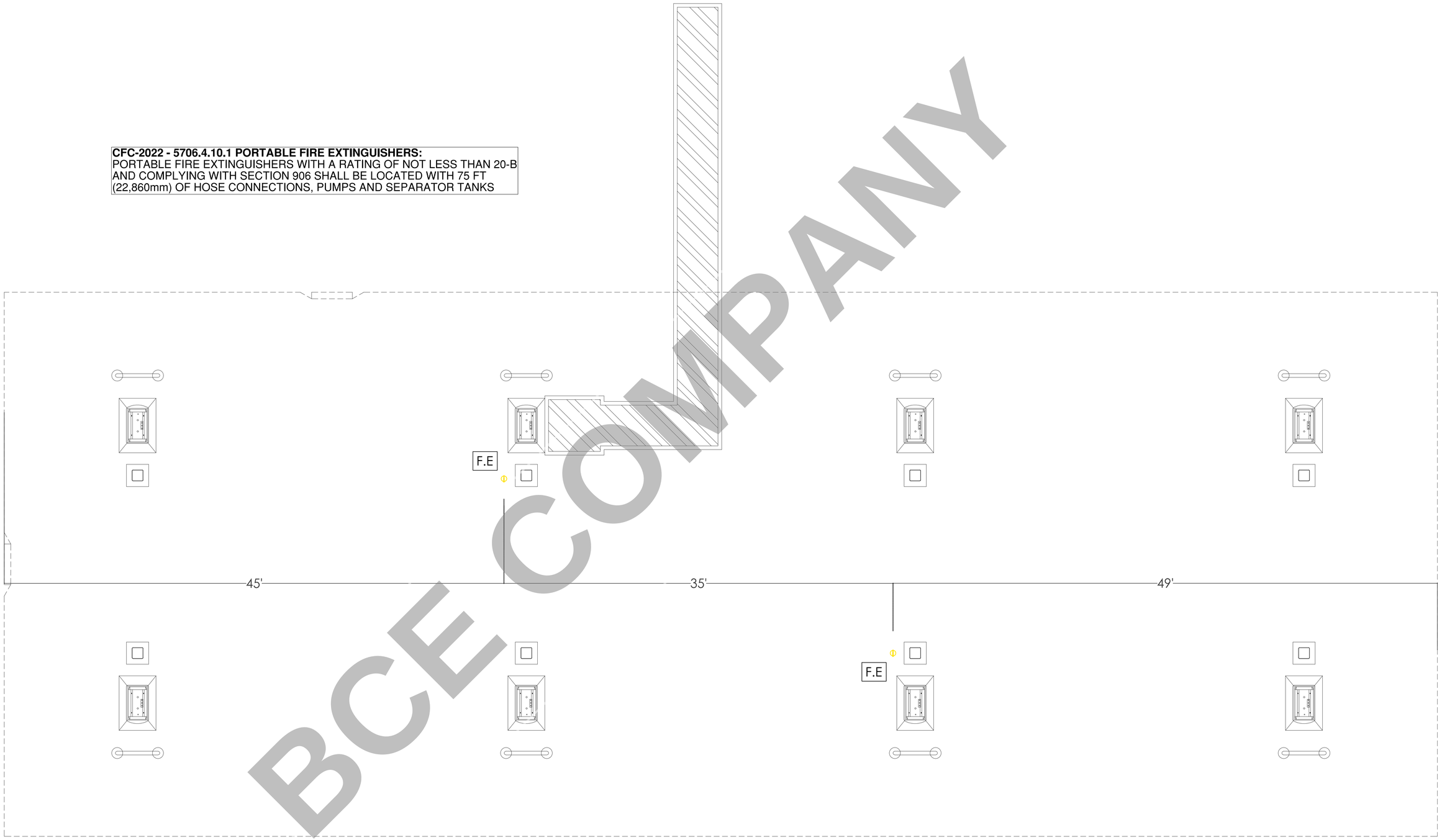

BCE COMPANY

FUEL CANOPY BUILDING#2 - FIRE EXTINGUISHER PLAN

SCALE: 1/4"=1'-0"

NO.	DATE	DESCRIPTION
1		
2		
3		
4		
5		
6		
7		
8		
9		
10		
11		
12		

SEAL:

DEVELOPMENT INFORMATION:

SITE ADDRESS:

DESIGNED BY:	
CHECKED BY:	
DRAWN BY:	MJ
DATE: 05/2023	PROJECT NO:

DRAWING TITLE:
FIRE EXTINGUISHERS FUEL CANOPY

SHEET NO:

F 1.03

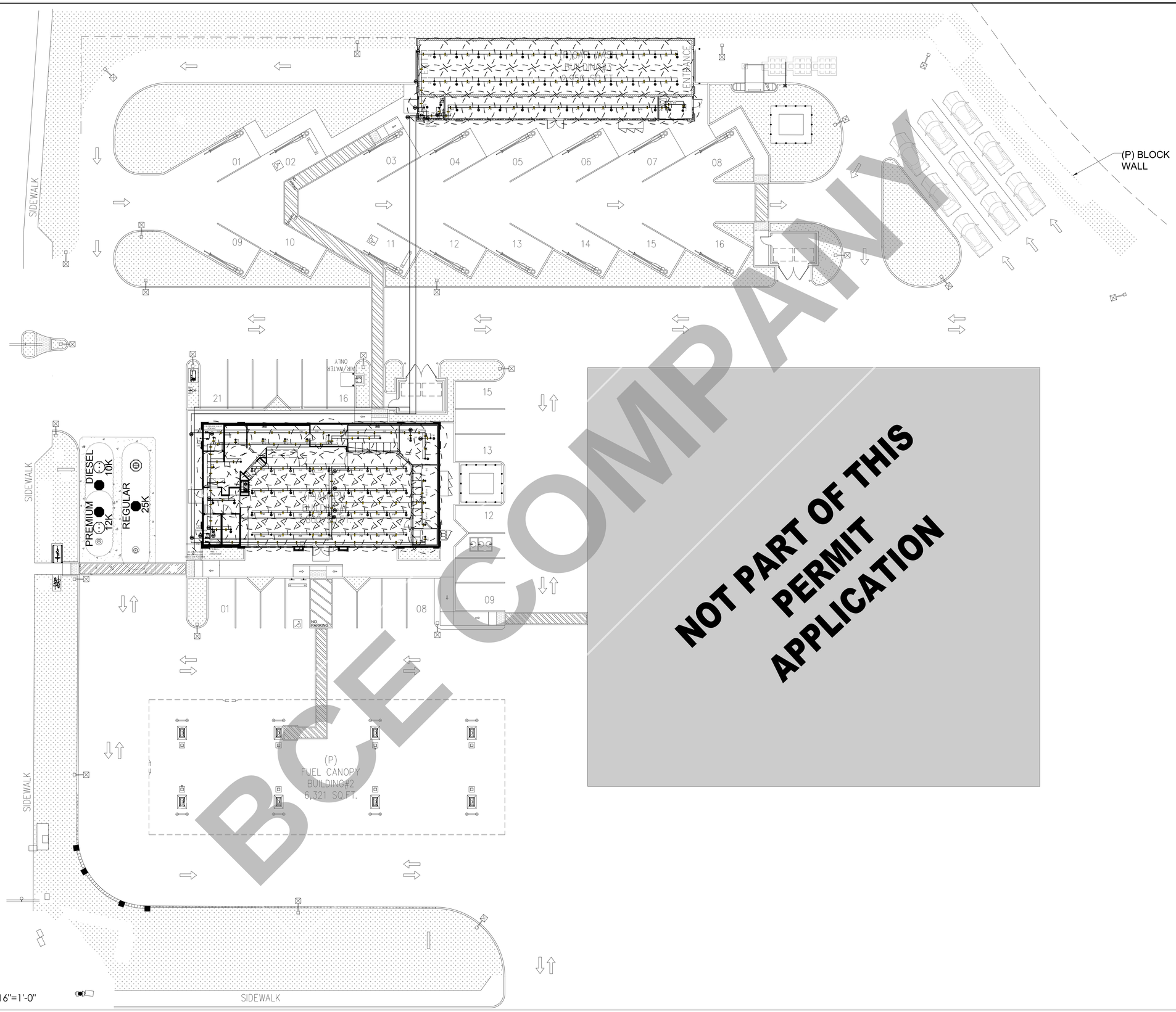

NOT PART OF THIS PERMIT APPLICATION

BCE COMPANY

SCALE: 1/16"=1'-0"

NO.	DATE	DESCRIPTION
1		
2		
3		
4		
5		
6		
7		
8		
9		
10		
11		
12		

SEAL:

DEVELOPMENT INFORMATION:

SITE ADDRESS:

DESIGNED BY:

CHECKED BY:

DRAWN BY: MJ

DATE: 05/2023

PROJECT NO:

DRAWING TITLE:
FIRE PROTECTION SITE PLAN

SHEET NO:

F 2.01

Worldwide Contacts | www.tyco-fire.com

Series TY-L – 5.6 and 8.0 K-factor Upright, Pendent, and Recessed Pendent Sprinklers Standard Response, Standard Coverage

IMPORTANT
Refer to Technical Data Sheet TFP2300 for warnings pertaining to regulatory and health information.

Always refer to Technical Data Sheet TFP700 for the "INSTALLER WARNING" that provides cautions with respect to handling and installation of sprinkler systems and components. Improper handling and installation can permanently damage a sprinkler system or its components and cause the sprinkler to fail to operate in a fire situation or cause it to operate prematurely.

Scan the QR code or enter the URL in a web browser to access the most up-to-date electronic version of this document. Data rates may apply.

docs.jci.com/tycofire/series-ty-l-5-6-and-8K

General Description

The TYCO Series TY-L 5.6 and 8.0 K-factor Upright, Pendent, and Recessed Pendent Sprinklers described herein are standard response, standard coverage, solder type spray sprinklers. They are designed for use in light, ordinary, and extra-hazard commercial occupancies such as banks, hotels, shopping malls, factories, refineries, and chemical plants.

The Series TY-L Recessed Pendent Sprinkler, where applicable, is intended for use in areas with a finished ceiling. It uses a two-piece Style 20 (1/2 in. NPT) or Style 30 (3/4 in. NPT) Recessed Escutcheon. The Recessed Escutcheon provides 1/4 in. (6,4 mm) of recessed adjustment or up to 1/2 in. (12,7 mm) of total adjustment from the flush pendent position. The adjustment provided by the Recessed Escutcheon reduces the accuracy to which the fixed pipe drops to the sprinklers must be cut.

Corrosion-resistant coatings, where applicable, are utilized to extend the life of copper alloy sprinklers beyond what would be obtained when exposed to corrosive atmospheres. Although corrosion-resistant coated sprinklers have passed the standard corrosion tests of the applicable approval agencies, the testing is not representative of all possible corrosive atmospheres. Consequently, it is recommended that the end-user be consulted about the suitability of these coatings for any given corrosive environment. The effects of ambient temperature, concentration of chemicals, and gas/chemical velocity, should be considered as a minimum, along with the corrosive nature of the chemical to which the sprinklers will be exposed.

An intermediate level version of the Series TY-L Pendent Sprinkler can be obtained by utilizing the Series TY-L Pendent Sprinkler in combination with the Model S Shield.

NOTICE
The Series TY-L 5.6 and 8.0 K-factor Upright, Pendent, and Recessed Pendent Sprinklers described herein must be installed and maintained in compliance with this document, as well as with the applicable standards of the NATIONAL FIRE PROTECTION ASSOCIATION (NFPA), in addition to the standards of any other authorities having jurisdiction. Failure to do so may impair the performance of these devices.

The owner is responsible for maintaining their fire protection system and devices in proper operating condition. Contact the installing contractor or product manufacturer with any questions.

NFPA 13 prohibits installation of 1/2 in. NPT sprinklers with K-factors greater than 5.6 in new construction. They are intended for retrofit in existing sprinkler systems only.

Sprinkler Identification Number (SIN)

- TY3111 . . . Upright 5.6K, 1/2 in. NPT
- TY3211 . . . Pendent 5.6K, 1/2 in. NPT
- TY4111 . . . Upright 8.0K, 3/4 in. NPT
- TY4211 . . . Pendent 8.0K, 3/4 in. NPT
- TY4811 . . . Upright 8.0K, 1/2 in. NPT
- TY4911 . . . Pendent 8.0K, 1/2 in. NPT

TY3111 is a re-designation for S1800 and G3111
TY3211 is a re-designation for S1801 and G3112
TY4111 is a re-designation for S1810 and G3101
TY4211 is a re-designation for S1811 and G3102
TY4811 is a re-designation for S1805
TY4911 is a re-designation for S1806

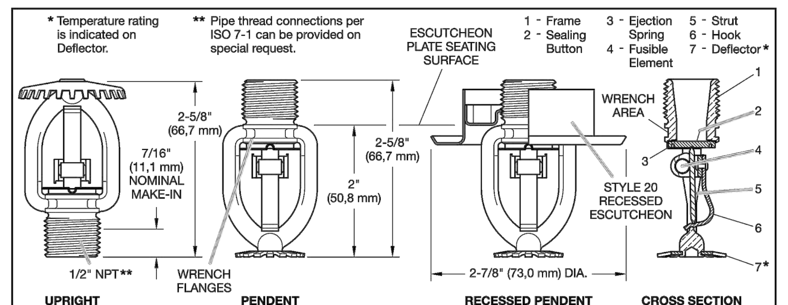

FIGURE 1
SERIES TY-L UPRIGHT (TY3111) AND PENDENT (TY3211) SPRINKLERS, 5.6 K-FACTOR, 1/2 IN. NPT

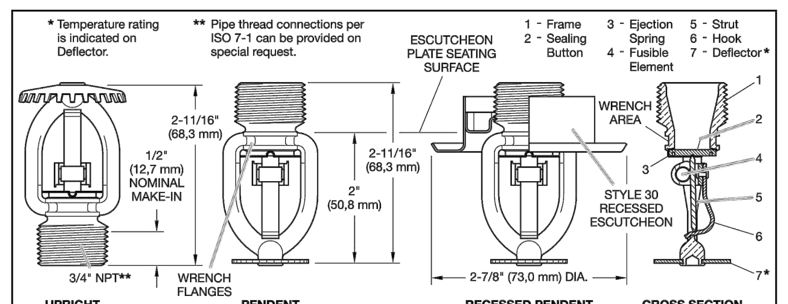

FIGURE 2
SERIES TY-L UPRIGHT (TY4111) AND PENDENT (TY4211) SPRINKLERS, 8.0 K-FACTOR, 3/4 IN. NPT

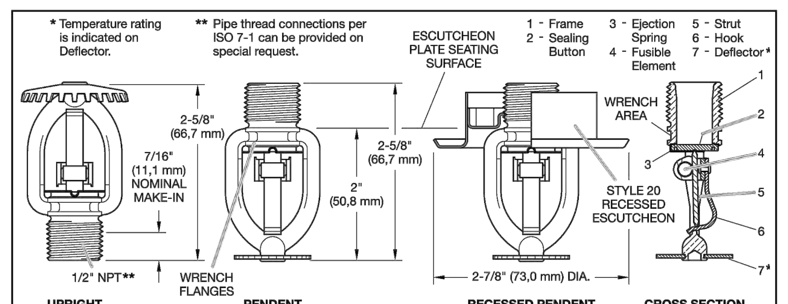

FIGURE 3
SERIES TY-L UPRIGHT (TY4811) AND PENDENT (TY4911) SPRINKLERS, 8.0 K-FACTOR, 1/2 IN. NPT

K-Factor	Type	Temperature Rating	Frame Color Code	Sprinkler Finish: Natural Brass	Chrome Plated	Lead Coated	Wax Coated	Wax-Over-Lead Coated
5.6 1/2 in. NPT	Upright (TY3111)	165°F (74°C)	Unpainted	1, 2, 3, 5		1, 2, 3		
		212°F (100°C)	White					
		280°F (138°C)	Blue			1, 2	4	N/A
	Pendent (TY3211)	165°F (74°C)	Unpainted	1, 2, 3		1, 2, 3		
		212°F (100°C)	White					
		280°F (138°C)	Blue			1,2	4	N/A
	Recessed Pendent (TY3211 w/Style 20)	165°F (74°C)	Unpainted	1, 2, 3		N/A6		
		212°F (100°C)	White	1, 2, 3				

NOTES:
1. UL Listed
2. C-UL Listed
3. FM Approved
4. FM Approved for maximum 150°F (68°C) ambient temperatures
5. LPCB Approved (LPCB Ref. No. 094a/03)
6. Not Available (N/A)

TABLE A
SERIES TY-L 5.6 K-FACTOR SPRINKLERS
LABORATORY LISTINGS AND APPROVALS

K-Factor	Type	Temperature Rating	Frame Color Code	Sprinkler Finish: Natural Brass	Chrome Plated	Lead Coated	Wax Coated	Wax-Over-Lead Coated
8.0 3/4 in. NPT	Upright (TY4111)	165°F (74°C)	Unpainted	1, 2, 3, 5		1, 2, 3		
		212°F (100°C)	White					
		280°F (138°C)	Blue			1, 2	4	N/A
	Pendent (TY4211)	165°F (74°C)	Unpainted	1, 2, 3		1, 2, 3		
		212°F (100°C)	White					
		280°F (138°C)	Blue			1, 2	4	N/A
	Recessed Pendent (TY4211 w/Style 30)	165°F (74°C)	Unpainted	1, 2		N/A		
		212°F (100°C)	White					
8.0 1/2 in. NPT	Upright (TY4811)	165°F (74°C)	Unpainted	1, 2, 3, 5		1, 2, 3		
		212°F (100°C)	White					
		280°F (138°C)	Blue			1, 2	N/A	
	Pendent (TY4911)	165°F (74°C)	Unpainted	1, 2, 3		1,2,3		
		212°F (100°C)	White					
		280°F (138°C)	Blue			1, 2	N/A	
	Recessed Pendent (TY4911 w/Style 20)	165°F (74°C)	Unpainted	1, 2		N/A		
		212°F (100°C)	White					

NOTES:
1. UL Listed
2. C-UL Listed
3. FM Approved
4. FM Approved for maximum 150°F (68°C) ambient temperatures
5. LPCB Approved (LPCB Ref. No. 094a/03)
6. Not Available (N/A)

TABLE B
SERIES TY-L 8.0 K-FACTOR SPRINKLERS
LABORATORY LISTINGS AND APPROVALS

Technical Data

Approvals
UL and C-UL Listed
FM and LPCB Approved

See Tables A and B for complete approval information including corrosion resistant status.

Maximum Working Pressure
175 psi (12,1 bar)

Discharge Coefficient
K=5.6 gpm/psi½ (80,6 Lpm/bar½)
K=8.0 gpm/psi½ (115,2 Lpm/bar½)

Temperature Ratings
See Tables A and B

Finishes
Sprinkler: See Tables A and B Recessed

Escutcheon: White Coated, Chrome Plated, or Brass Plated

Physical Characteristics
Frame . . . . Brass
Sealing Button . . . . Bronze w/TEFLON
Ejection Spring . . . . Stainless Steel
Strut . . . . MONEL
Hook . . . . Bronze/MONEL
Deflector . . . . Bronze
Fusible Element . . . . Solder, Copper, Stainless Steel

Worldwide Contacts | www.tyco-fire.com

Model ESFR-14 14.0 K-factor Pendent Sprinklers Early Suppression, Fast Response

General Description

TYCO Model ESFR-14, 14.0 K-factor, Pendent Sprinklers are Early Suppression, Fast Response (ESFR) sprinklers having a nominal K-factor of 14.0. They are suppression-mode sprinklers that are especially advantageous as a means of eliminating the use of in-rack sprinklers when protecting high-piled storage.

Model ESFR-14 Sprinklers are primarily designed for protection of the following storage arrangements:

- most encapsulated or non-encapsulated common materials including cartoned, unexpanded plastics
- some storage arrangements of rubber tires, roll paper, flammable liquids

For more specific criteria, refer to Table B in this technical data sheet as well as the applicable design standard.

NOTICE
The TYCO Model ESFR-14 Sprinklers described herein must be installed and maintained in compliance with this document, as well as with the applicable standards of the National Fire Protection Association (NFPA), in addition to the standards of any other authorities having jurisdiction, such as FM Global. Failure to do so may impair the performance of these devices.

IMPORTANT
Refer to Technical Data Sheet TFP2300 for warnings pertaining to regulatory and health information.

Always refer to Technical Data Sheet TFP700 for the "INSTALLER WARNING" that provides cautions with respect to handling and installation of sprinkler systems and components. Improper handling and installation can permanently damage a sprinkler system or its components and cause the sprinkler to fail to operate in a fire situation or cause it to operate prematurely.

The owner is responsible for maintaining their fire protection system and devices in proper operating condition. Contact the installing contractor or product manufacturer with any questions.

In all cases, the appropriate NFPA, FM Approvals installation standard, or other applicable standard, must be referenced to ensure applicability and to obtain complete installation guidelines. The general guidelines in this technical data sheet are not intended to provide complete installation criteria.

Sprinkler Identification Number (SIN)

Refer to Table A for sprinkler identification number.

Technical Data

Approvals
UL and C-UL Listed
FM Approved

Finish
Natural Brass

Physical Characteristics
Frame . . . . Brass
Deflector . . . . Bronze
Compression Screw . . . . Bronze
Button . . . . Brass
Bulb (3 mm) . . . . Glass
Sealing Assembly . . Beryllium Nickel w/TEFLON

Additional Technical Data
Refer to Table A for additional technical data.

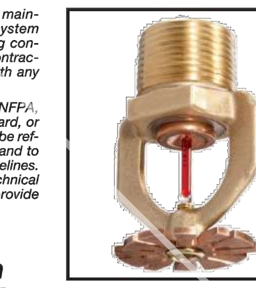

Operation

The glass bulb contains a fluid which expands when exposed to heat. When the rated temperature is reached, the fluid expands sufficiently to shatter the glass bulb, allowing the sprinkler to activate and water to flow.

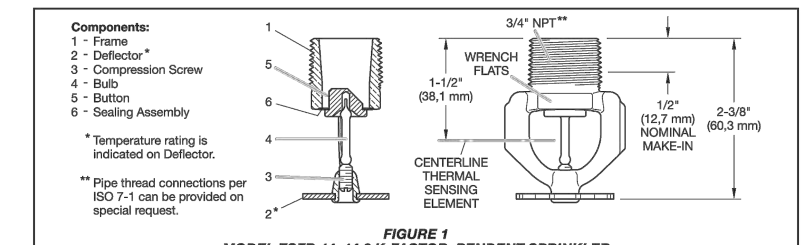

FIGURE 1
MODEL ESFR-14, 14.0 K-FACTOR, PENDENT SPRINKLER
EARLY SUPPRESSION, FAST RESPONSE

Item	Description
Sprinkler Identification Number (SIN)	TY6236
K-factor, gpm/psi½ (lpm/bar½)	14.0 gpm/psi½ (201,6 lpm/bar½)
Temperature Rating °F (°C)	155°F (68°C) 200°F (93°C)
Thread Size	3/4 in. NPT or ISO 7-1
Sprinkler Orientation	Pendent
Maximum Working Pressure, psi (bar)	175 psi (12 bar)

TABLE A
MODEL ESFR-14 PENDENT SPRINKLER
TECHNICAL DATA

Design Criteria

The following general guidelines provided for the TYCO Model ESFR-14, 14.0 K-factor, Pendent Sprinklers can be used for quick reference.

NOTICE
The National Fire Protection Association and FM Approvals provide installation standards that must be used to properly design an automatic sprinkler system utilizing Early Suppression, Fast Response (ESFR) Sprinklers. The guidelines provided by NFPA and FM Global may differ; consequently, the appropriate standard must be used for a given installation.

In all cases, the appropriate NFPA or FM Approvals installation standard must be referenced to assure applicability and to obtain complete installation guidelines, since the following general guidelines are not intended to provide complete installation criteria.

In addition to this technical data sheet, the following data sheets describe other TYCO ESFR Sprinklers:

- **TFP312**
  Model ESFR-25 (TY9226)
  K=25.2 Pendent Sprinkler
- **TFP313**
  Model ESFR-22 (TY8226)
  K=22.4 Pendnet Sprinkler
- **TFP315**
  Model ESFR-17 (TY7226)
  K=16.8 Pendent Sprinkler
- **TFP316**
  Model ESFR-17 (TY7126)
  K=16.8 Upright Sprinkler
- **TFP317**
  Model ESFR-17 (TY7223)
  K=16.8 Pendent Sprinkler
- **TFP318**
  Model ESFR-1 (TY6226)
  K=14.0 Pendent Sprinkler
- **TFP320**
  Model ESFR-17 (TY7229)
  K=16.8 Pendent Sprinkler

Roof Construction
Unobstructed or obstructed construction; for example, smooth ceiling, bar joists, beam and girder, and so forth.

Where the depths of solid structural members, such as beams and stem, exceed 12 in. (302 mm), install Model ESFR-14 Sprinklers in each channel formed by the structural members.

Ceiling Slope
Maximum 2 in. rise for 12 in. run (16.7%)

Maximum Coverage Area
100 ft² (9,3 m²)

In some cases, the installation standards permit a greater coverage area.

Minimum Coverage Area
64 ft² (5,8 m2) per
NFPA 13 / FM Global 2-0

Maximum Spacing
12 ft (3,7 m) for building heights up to 30 ft (9,1 m)

10 ft (3,1 m) for building heights greater than 30 ft (9,1 m)

Minimum Spacing
8 ft (2,4 m)

Minimum Clearance to Commodity
36 in. (914 mm)

NFPA 13
Deflector-to-Ceiling Distance
6 in. to 14 in. (152 mm to 356 mm)

FM Global 2-0
Consult FM Global guidelines for allowable deflector-to-ceiling distances as well as thermal-sensing element-to-ceiling criteria.

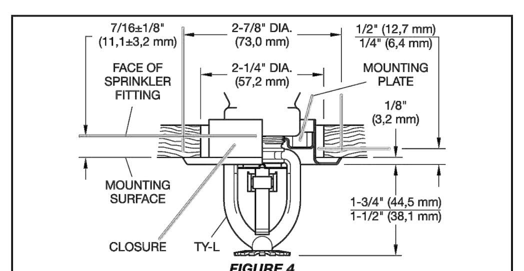

FIGURE 4
SERIES TY-L (TY3211) RECESSED PENDENT SPRINKLER ASSEMBLY WITH TWO-PIECE 1/2 IN. TOTAL ADJUSTMENT STYLE 20 RECESSED ESCUTCHEON 5.6 K-FACTOR, 1/2 IN. NPT

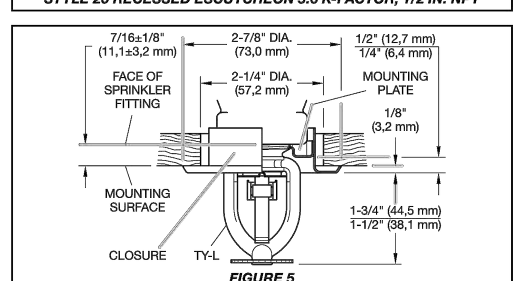

FIGURE 5
SERIES TY-L (TY4211) RECESSED PENDENT SPRINKLER ASSEMBLY WITH TWO-PIECE 1/2 IN. TOTAL ADJUSTMENT STYLE 30 RECESSED ESCUTCHEON 8.0 K-FACTOR, 3/4 IN. NPT

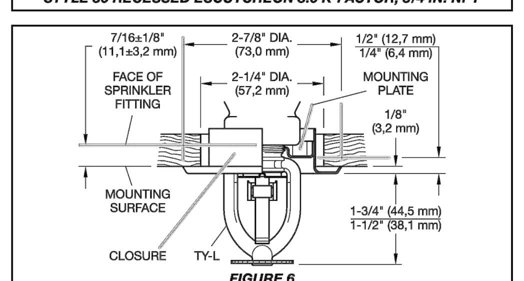

FIGURE 6
SERIES TY-L (TY4911) RECESSED PENDENT SPRINKLER ASSEMBLY WITH TWO-PIECE 1/2 IN. TOTAL ADJUSTMENT STYLE 20 RECESSED ESCUTCHEON 8.0 K-FACTOR, 1/2 IN. NPT

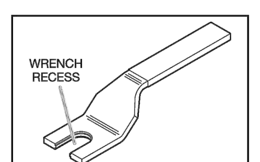

FIGURE 7
W-TYPE 9 SPRINKLER WRENCH

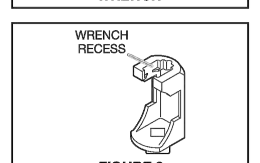

FIGURE 8
W-TYPE 10 RECESSED SPRINKLER WRENCH

Operation

A copper tube sealed by two stainless steel balls holds a fusible alloy. When the rated temperature is reached, the alloy melts and the balls are forced toward each other. This releases the tension mechanism and allows the sprinkler to operate.

Design Criteria

The TYCO Series TY-L 5.6 and 8.0 K-factor Upright, Pendent, and Recessed Pendent Sprinklers are intended for fire protection systems designed in accordance with the standard installation rules recognized by the applicable Listing or Approval agency, such as the UL Listing based on the requirements of NFPA 13 and FM Approval based on the requirements of FM Loss Prevention Data Sheets. Use only the Style 20 or 30 Recessed Escutcheon, as applicable, for recessed pendent installations.

Installation

The TYCO Series TY-L 5.6 and 8.0 K-factor Upright, Pendent, and Recessed Pendent Sprinklers must be installed in accordance with this section.

General Instructions
A leak tight 1/2 in. NPT sprinkler joint should be obtained with a torque of 7 to 14 ft-lb (9,5 to 19,0 Nm). A leak- tight 3/4 in. NPT sprinkler joint should be obtained with a torque of 10 to 20 ft-lb (13,4 to 26,8 Nm). Higher levels of torque may distort the sprinkler inlet and cause leakage or impairment of the sprinkler.

Do not attempt to compensate for insufficient adjustment in the escutcheon plate by under- or over-tightening the sprinkler. Re-adjust the position of the sprinkler fitting to suit.

Series TY-L Upright and Pendent Sprinklers Installation
The Series TY-L Pendent and Upright Sprinklers must be installed in accordance with the following instructions:

Step 1. Install pendent sprinklers in the pendent position. Install upright sprinklers in the upright position.

Step 2. With pipe thread sealant applied to the pipe threads, hand-tighten the sprinkler into the sprinkler fitting.

Step 3. Tighten the sprinkler into the sprinkler fitting using only the W-Type 9 Sprinkler Wrench, see Figure 7. For wax coated sprinklers, use an 8 or 10 in. adjustable Crescent wrench. With reference to Figures 1, 2, and 3, apply the W-Type 9 Sprinkler Wrench to the wrench area, or as applicable, apply the adjustable Crescent wrench to the wrenching flanges.

Wax Coated Sprinklers
When installing wax-coated sprinklers with the adjustable Crescent wrench, take care to prevent damage to the wax coating on the sprinkler wrench flats or frame arms and, consequently, exposure of bare metal to the corrosive environment:

- Open the jaws of the wrench sufficiently wide to pass over the wrench flats without damaging the wax coating.
- Before wrench tightening the sprinkler, adjust the jaws of the wrench to just contact the sprinkler flats.
- After wrench tightening the sprinkler, loosen the wrench jaws before removing the wrench.

After Installation
After installation, complete the following:

- Inspect the sprinkler wrench flats and frame arms and retouch (repair) the wax coating whenever the coating has been damaged and bare metal is exposed.
- Retouch the wax coating on the wrench flats by gently applying a heated 1/8 in. diameter steel rod to the damaged areas of the wax, to smooth it back over areas where bare metal is exposed.

NOTICE
Only retouching of the wax coating applied to the wrench flats and frame arms is permitted, and the retouching is to be performed only at the time of the initial sprinkler installation.

The steel rod should be heated only to the point it can begin to melt the wax, and appropriate precautions need to be taken when handling the heated rod to prevent the installer from being burned.

If attempts to retouch the wax coating with complete coverage are unsuccessful, additional wax can be ordered in the form of a wax stick, the end of which is color coded. Only the correct color coded wax is to be used, and retouching of wrench flats and frame arms is only permitted at the time of initial sprinkler installation.

With the steel rod heated as previously described, touch the rod to the area requiring additional wax with the rod angled downward, and then touch the wax stick to the rod approximately 1/2 in. (12,7 mm) away from the area requiring retouching. The wax will melt and run down onto the sprinkler.

Series TY-L Recessed Pendent Sprinklers Installation
The Series TY-L Recessed Pendent Sprinkler must be installed in accordance with the following instructions:

Step 1. After installing the Style 20 or 30 Mounting Plate, as applicable, over the sprinkler threads and with pipe thread sealant applied to the pipe threads, hand-tighten the sprinkler into the sprinkler fitting.

Step 2. Tighten the sprinkler into the sprinkler fitting using only the W-Type 10 Recessed Sprinkler Wrench, see Figure 8. With reference to Figure 1, 2, or 3, apply the W-Type 10 Recessed Sprinkler Wrench to the sprinkler wrenching flanges.

Step 3. After the ceiling has been installed or the finish coat has been applied, slide on the Style 20 or 30 Closure over the Series TY-L Recessed Pendent Sprinkler and push the Closure over the Mounting Plate until its flange comes in contact with the ceiling.

Care and Maintenance

The TYCO Series TY-L 5.6 and 8.0 K-factor Upright, Pendent, and Recessed Pendent Sprinklers must be maintained and serviced in accordance with this section.

Before closing a fire protection system main control valve for maintenance work on the fire protection system that it controls, permission to shut down the affected fire protection system must be obtained from the proper authorities and all personnel who may be affected by this action must be notified.

Absence of an escutcheon, which is used to cover a clearance hole, may delay the time to sprinkler operation in a fire situation.

Sprinklers that are found to be leaking or exhibiting visible signs of corrosion must be replaced.

Automatic sprinklers must never be painted, plated, coated or otherwise altered after leaving the factory. Modified or over-heated sprinklers must be replaced. Care must be exercised to avoid damage to the sprinklers before, during, and after installation. Sprinklers damaged by dropping, striking, wrench twist/slippage, or the like, must be replaced.

Frequent visual inspections are recommended to be initially performed for corrosion resistant coated sprinklers, after the installation has been completed, to verify the integrity of the corrosion-resistant coating. Thereafter, annual inspections per NFPA 25 should suffice; however, instead of inspecting from the floor level, a random sampling of close-up visual inspections should be made so as to better determine the exact sprinkler condition and the long-term integrity of the corrosion resistant coating, as it may be affected by the corrosive conditions present.

The owner is responsible for the inspection, testing, and maintenance of their fire protection system and devices in compliance with this document, as well as with the applicable standards of the NATIONAL FIRE PROTECTION ASSOCIATION, such as, NFPA 25, in addition to the standards of any other authorities having jurisdiction. Contact the installing contractor or product manufacturer with any questions.

It is recommended that automatic sprinkler systems be inspected, tested, and maintained by a qualified Inspection Service in accordance with local requirements and/or national codes.

P/N 53 - XXX - X - XXX

		SIN
111	5.6K UPRIGHT (1/2 in. NPT)	TY3111
112	5.6K PENDENT (1/2 in. NPT)	TY3211
101	8.0K UPRIGHT (3/4 in. NPT)	TY4111
102	8.0K PENDENT (3/4 in. NPT)	TY4211
106	8.0K UPRIGHT (1/2 in. NPT)	TY4811
107	8.0K PENDENT (1/2 in. NPT)	TY4911

	SPRINKLER FINISH
1	NATURAL BRASS
6	WAX COATED 165°F TO 280°F ONLY
7	LEAD COATED
8	WAX OVER LEAD 165°F TO 212°F ONLY
9	CHROME PLATED

	TEMPERATURE RATING
165	165°F (74°C)
212	212°F (100°C)
280	280°F (138°C)

TABLE C
SERIES TY-L PENDENT AND UPRIGHT SPRINKLERS
PART NUMBER SELECTION

Limited Warranty

For warranty terms and conditions, visit www.tyco-fire.com.

Ordering Procedure

Contact your local distributor for availability. When placing an order, indicate the full product name and Part Number (P/N).

Sprinkler Assemblies with NPT Thread Connections
Specify: Series TY-L (specify SIN), (specify K-factor), (specify Upright, Pendent, or Recessed Pendent) Sprinkler, Standard Response, Standard Coverage, (specify) temperature rating, (specify) finish or coating, P/N (specify from Table C)

Recessed Escutcheon
Specify: Style (specify) Recessed Escutcheon, (specify material) with (specify*) finish, P/N (specify*)

*Refer to Technical Data Sheet TFP770

Sprinkler Wrench
Specify: W-Type 9 Sprinkler Wrench, P/N 56-000-1-849

Specify: W-Type 10 Sprinkler Wrench, P/N 56-000-1-948

Wax Sticks (for retouching wrench-damaged wax coating)
Specify: Series TY-L Sprinklers, (specify color), color coded Wax Stick for retouching, (specify) temperature rated, P/N (specify):

Red for 165°F (74°C) . . . . P/N 56-065-1-155
Blue for 212°F (100°C)
and 280°F (138°C) . . . . P/N 56-065-1-286

***Note:** Each wax stick is suitable for retouching up to twenty-five sprinklers. The wax used for 280°F (138°C) sprinklers is the same as for 212°F (100°C) sprinklers. Therefore, the 280°F (138°C) sprinkler is limited to the same maximum ceiling temperature as the 212°F (100°C) sprinkler, which is 150°F (65°C).*

© 2020 Johnson Controls. All rights reserved. All specifications and other information shown were current as of document revision date and are subject to change without notice.
NATIONAL FIRE PROTECTION ASSOCIATION and NFPA are registered trademarks of National Fire Protection Association; MONEL and INCONEL are registered trademarks of Special Metals Corporation; TEFLON is a trademark of The Chemours Company FC, LLC

Johnson Controls

Storage Type	NFPA	FM Global
Sprinkler Type	ESFR	Storage
Response Type	QR	QR
System Type	Wet	Wet
Temperature Rating °F (°C)	155°F (68°C) 200°F (93°C)	155°F (68°C) 200°F (93°C)
Open Frame (i.e., no solid shelves) Single, Double, Multiple-Row, or Portable Rack Storage of Class I-IV and Group A or B Plastics	Refer to NFPA 13	Refer to FM 2-0 and 8-9
Solid Pile or Palletized Storage of Class I-IV and Group A or B Plastics	Refer to NFPA 13	Refer to FM 2-0 and 8-9
Idle Pallet Storage	Refer to NFPA 13	Refer to FM 2-0, 8-9, and 8-24
Rubber Tire Storage	Refer to NFPA 13	Refer to FM 2-0 and 8-3
Roll Paper Storage (Refer to the Standard)	Refer to NFPA 13	Refer to FM 8-21
Flammable/Ignitable Liquid Storage (Refer to the Standard)	Refer to NFPA 30	Refer to FM 7-29
Aerosol Storage (Refer to the Standard)	Refer to NFPA 30B	Refer to FM 7-31
Automotive Components in Portable Racks (Control mode only; refer to the Standard)	N/A	N/A

N/A – Not Applicable

TABLE B
MODEL ESFR-14 PENDENT SPRINKLERS
COMMODITY SELECTION AND DESIGN CRITERIA OVERVIEW

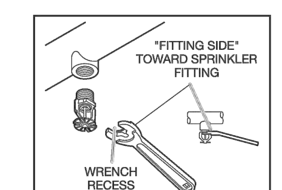

FIGURE 2
W-TYPE 34
SPRINKLER WRENCH

Installation

TYCO Model ESFR-14 Pendent Sprinklers must be installed in accordance with this section.

General Instructions
Do not install any bulb type sprinkler if the bulb is cracked or there is a loss of liquid from the bulb. With the sprinkler held horizontally, a small air bubble should be present.

A leak-tight 3/4 in. NPT sprinkler joint should be obtained by applying a minimum-to-maximum torque of 10 to 20 lb-ft (13,4 to 26,8 N·m). Higher levels of torque can distort the sprinkler inlet with consequent leakage or impairment of the sprinkler.

***Note:** Install the Model ESFR-14 Pendent Sprinkler only in the pendent position (Ref. Figure 1).*

Step 1. With pipe thread sealant applied, hand-tighten the sprinkler into the sprinkler fitting.

Step 2. Wrench-tighten the Model ESFR-14 Sprinkler using only the W-Type 34 Sprinkler Wrench (Ref. Figure 2) and by fully engaging (seating) the wrench on the sprinkler wrench flats (Ref. Figure 1).

Step 3. After installation, inspect the bulb of each Model ESFR-14 Sprinkler for damage. In particular, verify that the bulb is not cracked. Replace damaged sprinklers.

Care and Maintenance

TYCO Model ESFR-14, 14.0 K-factor, Pendent Sprinklers (TY6236) must be maintained and serviced in accordance with this section.

Before closing a fire protection system main control valve for maintenance work on the fire protection system that it controls, obtain permission to shut down the affected fire protection systems from the proper authorities and notify all personnel who may be affected by this action.

Sprinklers which are found to be leaking or exhibiting visible signs of corrosion must be replaced.

Automatic sprinklers must never be painted, plated, coated, or otherwise altered after leaving the factory. Modified sprinklers must be replaced. Sprinklers that have been exposed to corrosive products of combustion, but have not operated, should be replaced if they cannot be completely cleaned by wiping the sprinkler with a cloth or by brushing it with a soft bristle brush.

Care must be exercised to avoid damage to the sprinklers before, during, and after installation. Sprinklers damaged by dropping, striking, wrench twist/slippage, or the like, must be replaced. Also, replace any sprinkler that has a cracked bulb or that has lost liquid from its bulb. Refer to Installation section for additional information.

The owner is responsible for the inspection, testing, and maintenance of their fire protection system and devices in compliance with this document, as well as with the applicable standards of the National Fire Protection Association, such as NFPA 25, in addition to the standards of any other authorities having jurisdiction. Contact the installing contractor or product manufacturer with any questions.

Automatic sprinkler systems are recommended to be inspected, tested, and maintained by a qualified Inspection Service in accordance with local requirements and/or national codes.

Limited Warranty

For warranty terms and conditions, visit www.tyco-fire.com.

Ordering Procedure

Contact your local distributor for availability. When placing an order, indicate the full product name and Part Number (P/N).

Sprinkler Assemblies
Specify: Model ESFR-14 (TY6236), K=14.0, Pendent Sprinkler with (specify) temperature rating, Natural Brass, P/N (specify):

155°F (68°C) 58-449-1-155
200°F (93°C) 58-449-1-200

Special Order
Sprinkler Assemblies with ISO 7-1 Thread Connections
Specify: Model ESFR-14 (TY6236), K=14.0, Early Suppression, Fast Response Pendent Sprinkler with ISO 7-1 Thread Connection, (specify) temperature rating, Natural Brass, P/N (specify):

155°F (68°C) 58-443-1-155
200°F (93°C) 58-443-1-200

Sprinkler Wrenches
Specify: W-Type 34 Sprinkler Wrench P/N 56-462-1-001

© 2018 Johnson Controls. All rights reserved. All specifications and other information shown were current as of document revision date and are subject to change without notice.
NATIONAL FIRE PROTECTION ASSOCIATION and NFPA are registered trademarks of National Fire Protection Association; TEFLON is a registered trademark of DuPont

Johnson Controls

NO.	DATE	DESCRIPTION
1		
2		
3		
4		
5		
6		
7		
8		
9		
10		
11		
12		

SEAL:

DEVELOPMENT INFORMATION:

SITE ADDRESS:

DESIGNED BY:
CHECKED BY:
DRAWN BY: MJ
DATE: 05/2023
PROJECT NO:

DRAWING TITLE:
FIRE SPRINKLERS DATA SHEETS.

SHEET NO:
F 3.01

BCL COMPANY

BCE COMPANY

AM/PM C.STORE-SALES AREA "ORD.2"
Fire Sprinkler Reports

for

NEC SOBOBA ST & FLORIDA AVE
HEMET, CA 92544

Prepared By:

BCE - MJ

2023.06.15

General Project Data Report

General Data

Project Title:	AM/PM C.Store-Sales Area "Ord.2"	Project File Name:	Soboba-Sales Area-Ordinary Hazard Grp 2..fiw
Designed By:	BCE - MJ	Date:	2023.06.15
Code Reference:		Approving Agency:	
Client Name:		Phone:	
Address:	NEC SOBOBA ST & FLORIDA AVE	City, State Zip Code:	HEMET, CA 92544
Company Name:		Representative:	
Company Address:		City And State:	
Phone:			
Building Name:		Building Owner:	
Contact at Building:		Phone at Building:	
Address Of Building:		City, State Zip Code:	

Project Data

Description Of Hazard:	Ordinary 2	Sprinkler System Type:	Wet
Design Area Of Water Application:	1500 ft²	Maximum Area Per Sprinkler:	113 ft²
Default Sprinkler K-Factor:	8.00 K	Default Pipe Material:	SCHED 40 WET STEEL
Inside Hose Stream Allowance:	0.00 gpm	Outside Hose Stream Allowance:	0.00 gpm
In Rack Sprinkler Allowance:	0.00 gpm		

Sprinkler Specifications

Make:	Tyco	Model:	
Size:		Temperature Rating:	0 F

Water Supply Test Data

Source Of Information:			
Test Hydrant ID:		Date Of Test:	
Hydrant Elevation:	0 ft	Static Pressure:	65.00 psi
Test Flow Rate:	1130.00 gpm	Test Residual Pressure:	45.00 psi
Calculated System Flow Rate:	988.00 gpm	Calculated Inflow Residual Pressure:	32.25 psi
Available Residual Pressure At System Flow:	49.4 psi		

Calculation Project Data

Calculation Mode:	Demand		
HMD Minimum Residual Pressure:	15.00 psi	Minimum Desired Flow Density:	0.20 gpm/ft²
Maximum Water Velocity:	20.00 ft/s	Maximum Frictional Loss / 100 feet:	0.00 psi
Number Of Active Nodes:	41		
Number Of Active Pipes:	40	Number Of Inactive Pipes:	0
Number Of Active Sprinklers:	31	Number Of Inactive Sprinklers:	0

Fire Sprinkler Output Data

Overall Pipe Output Data

Beg. End. Node	Nodal KFactor (K)	Elevation (feet)	Spk/Hose Discharge (gpm)	Residual Pressure (psi)	Nom. Dia. Inside Dia. C-Value	q (gpm) Q (gpm) Velocity (fps)	F. L./ft (psi/ft) Fittings Type-Grp	Pipe-Len. Fit-Len. Tot-Len. (ft)	PF-(psi) PE-(psi) PT-(psi)
1	8.00	12.00	31.16	15.18	4.00	31.16	0.00042	8.00	0.016
2	8.00	12.00	31.18	15.19	4.026	31.16	ET	30.00	0.000
	SCHED 40 WET STEEL				120	0.79	0	38.00	0.016
2	8.00	12.00	31.18	15.19	4.00	31.18	0.00153	7.00	0.041
3	8.00	12.00	31.22	15.23	4.026	62.35	T	20.00	0.000
	SCHED 40 WET STEEL				120	1.57	0	27.00	0.041
3	8.00	12.00	31.22	15.23	4.00	31.22	0.00323	7.00	0.087
4	8.00	12.00	31.31	15.32	4.026	93.57	T	20.00	0.000
	SCHED 40 WET STEEL				120	2.36	0	27.00	0.087
6	8.00	12.00	31.13	15.14	4.00	31.13	0.00546	7.00	0.147
5	8.00	12.00	31.28	15.29	4.026	124.16	T	20.00	0.000
	SCHED 40 WET STEEL				120	3.13	0	27.00	0.147
7	8.00	12.00	31.04	15.06	4.00	31.04	0.00320	7.00	0.086
6	8.00	12.00	31.13	15.14	4.026	93.03	T	20.00	0.000
	SCHED 40 WET STEEL				120	2.34	0	27.00	0.086
8	8.00	12.00	31.00	15.02	4.00	31.00	0.00151	7.00	0.041
7	8.00	12.00	31.04	15.06	4.026	61.98	T	20.00	0.000
	SCHED 40 WET STEEL				120	1.56	0	27.00	0.041
9	8.00	12.00	30.98	15.00	4.00	30.98	0.00042	7.00	0.015
8	8.00	12.00	31.00	15.02	4.026	30.98	ET	30.00	0.000
	SCHED 40 WET STEEL				120	0.78	0	37.00	0.015
10	8.00	12.00	31.39	15.39	4.00	31.39	0.00043	7.50	0.016
11	8.00	12.00	31.40	15.41	4.026	31.39	ET	30.00	0.000
	SCHED 40 WET STEEL				120	0.79	0	37.50	0.016
11	8.00	12.00	31.40	15.41	4.00	31.40	0.00155	7.00	0.042
12	8.00	12.00	31.45	15.45	4.026	62.79	T	20.00	0.000
	SCHED 40 WET STEEL				120	1.58	0	27.00	0.042
12	8.00	12.00	31.45	15.45	4.00	31.45	0.00328	7.00	0.088
13	8.00	12.00	31.54	15.54	4.026	94.24	T	20.00	0.000
	SCHED 40 WET STEEL				120	2.38	0	27.00	0.088
15	8.00	12.00	31.36	15.37	4.00	31.36	0.00553	7.00	0.149
14	8.00	12.00	31.51	15.52	4.026	125.07	T	20.00	0.000
	SCHED 40 WET STEEL				120	3.15	0	27.00	0.149
16	8.00	12.00	31.27	15.28	4.00	31.27	0.00324	7.00	0.088
15	8.00	12.00	31.36	15.37	4.026	93.71	T	20.00	0.000
	SCHED 40 WET STEEL				120	2.36	0	27.00	0.088
17	8.00	12.00	31.23	15.24	4.00	31.23	0.00153	7.00	0.041
16	8.00	12.00	31.27	15.28	4.026	62.44	T	20.00	0.000
	SCHED 40 WET STEEL				120	1.57	0	27.00	0.041

Fire Sprinkler Output Data

Overall Pipe Output Data (cont'd)

Beg. End. Node	Nodal KFactor (K)	Elevation (feet)	Spk/Hose Discharge (gpm)	Residual Pressure (psi)	Nom. Dia. Inside Dia. C-Value	q (gpm) Q (gpm) Velocity (fps)	F. L./ft (psi/ft) Fittings Type-Grp	Pipe-Len. Fit-Len. Tot-Len. (ft)	PF-(psi) PE-(psi) PT-(psi)
18	8.00	12.00	31.21	15.22	4.00	31.21	0.00042	7.00	0.016
17	8.00	12.00	31.23	15.24	4.026	31.21	ET	30.00	0.000
	SCHED 40 WET STEEL				120	0.79	0	37.00	0.016
19	8.00	12.00	31.49	15.49	4.00	31.49	0.00043	7.00	0.016
20	8.00	12.00	31.50	15.51	4.026	31.49	ET	30.00	0.000
	SCHED 40 WET STEEL				120	0.79	0	37.00	0.016
20	8.00	12.00	31.50	15.51	4.00	31.50	0.00156	7.00	0.042
21	8.00	12.00	31.54	15.55	4.026	62.99	T	20.00	0.000
	SCHED 40 WET STEEL				120	1.59	0	27.00	0.042
21	8.00	12.00	31.54	15.55	4.00	31.54	0.00330	7.00	0.089
22	8.00	12.00	31.63	15.64	4.026	94.53	T	20.00	0.000
	SCHED 40 WET STEEL				120	2.38	0	27.00	0.089
24	8.00	12.00	31.32	15.33	4.00	31.32	0.00552	7.00	0.149
23	8.00	12.00	31.47	15.48	4.026	124.92	T	20.00	0.000
	SCHED 40 WET STEEL				120	3.15	0	27.00	0.149
25	8.00	12.00	31.23	15.24	4.00	31.23	0.00324	7.00	0.087
24	8.00	12.00	31.32	15.33	4.026	93.60	T	20.00	0.000
	SCHED 40 WET STEEL				120	2.36	0	27.00	0.087
26	8.00	12.00	31.19	15.20	4.00	31.19	0.00153	7.00	0.041
25	8.00	12.00	31.23	15.24	4.026	62.37	T	20.00	0.000
	SCHED 40 WET STEEL				120	1.57	0	27.00	0.041
27	8.00	12.00	31.18	15.19	4.00	31.18	0.00042	7.00	0.016
26	8.00	12.00	31.19	15.20	4.026	31.18	ET	30.00	0.000
	SCHED 40 WET STEEL				120	0.79	0	37.00	0.016
28	8.00	12.00	35.68	19.89	4.00	35.68	0.00054	8.00	0.021
29	8.00	12.00	35.69	19.91	4.026	35.68	ET	30.00	0.000
	SCHED 40 WET STEEL				120	0.90	0	38.00	0.021
30	8.00	12.00	35.68	19.90	4.00	35.68	0.00054	8.00	0.021
31	8.00	12.00	35.70	19.92	4.026	35.68	ET	30.00	0.000
	SCHED 40 WET STEEL				120	0.90	0	38.00	0.021
4	8.00	12.00	31.31	15.32	4.00	31.31	0.00552	6.00	0.143
101	0.00	12.00	0.00	15.46	4.026	124.88	T	20.00	0.000
	SCHED 40 WET STEEL				120	3.15	0	26.00	0.143
5	8.00	12.00	31.28	15.29	4.00	31.28	0.00827	1.00	0.174
101	0.00	12.00	0.00	15.46	4.026	155.44	T	20.00	0.000
	SCHED 40 WET STEEL				120	3.92	0	21.00	0.174
13	8.00	12.00	31.54	15.54	4.00	31.54	0.00559	7.00	0.151
102	0.00	12.00	0.00	15.69	4.026	125.78	T	20.00	0.000
	SCHED 40 WET STEEL				120	3.17	0	27.00	0.151

Fire Sprinkler Output Data

Overall Pipe Output Data (cont'd)

Beg. End. Node	Nodal KFactor (K)	Elevation (feet)	Spk/Hose Discharge (gpm)	Residual Pressure (psi)	Nom. Dia. Inside Dia. C-Value	q (gpm) Q (gpm) Velocity (fps)	F. L./ft (psi/ft) Fittings Type-Grp	Pipe-Len. Fit-Len. Tot-Len. (ft)	PF-(psi) PE-(psi) PT-(psi)
14	8.00	12.00	31.51	15.52	4.00	31.51	0.00838	1.00	0.176
102	0.00	12.00	0.00	15.69	4.026	156.58	T	20.00	0.000
	SCHED 40 WET STEEL				120	3.95	0	21.00	0.176
101	0.00	12.00	0.00	15.46	6.00	0.00	0.00335	8.00	0.228
102	0.00	12.00	0.00	15.69	6.065	280.32	2T	60.00	0.000
	SCHED 40 WET STEEL				120	3.11	0	68.00	0.228
22	8.00	12.00	31.63	15.64	4.00	31.63	0.00562	7.00	0.152
103	0.00	12.00	0.00	15.79	4.026	126.17	T	20.00	0.000
	SCHED 40 WET STEEL				120	3.18	0	27.00	0.152
23	8.00	12.00	31.47	15.48	4.00	31.47	0.00837	7.00	0.310
103	0.00	12.00	0.00	15.79	4.026	156.40	ET	30.00	0.000
	SCHED 40 WET STEEL				120	3.94	0	37.00	0.310
102	0.00	12.00	0.00	15.69	6.00	0.00	0.01215	8.00	0.097
103	0.00	12.00	0.00	15.79	6.065	562.68	-----	0.00	0.000
	SCHED 40 WET STEEL				120	6.25	0	8.00	0.097
103	0.00	12.00	0.00	15.79	6.00	0.00	0.02580	45.00	2.296
104	0.00	12.00	0.00	18.08	6.065	845.24	ET	44.00	0.000
	SCHED 40 WET STEEL				120	9.39	0	89.00	2.296
29	8.00	12.00	35.69	19.91	4.00	35.69	0.00196	1.00	0.041
105	0.00	12.00	0.00	19.95	4.026	71.37	T	20.00	0.000
	SCHED 40 WET STEEL				120	1.80	0	21.00	0.041
31	8.00	12.00	35.70	19.92	4.00	35.70	0.00196	1.00	0.041
106	0.00	12.00	0.00	19.96	4.026	71.39	T	20.00	0.000
	SCHED 40 WET STEEL				120	1.80	0	21.00	0.041
105	0.00	12.00	0.00	19.95	6.00	0.00	0.00027	11.00	0.011
106	0.00	12.00	0.00	19.96	6.065	71.37	T	30.00	0.000
	SCHED 40 WET STEEL				120	0.79	0	41.00	0.011
104	0.00	12.00	0.00	18.08	6.00	0.00	0.02580	45.00	1.935
107	0.00	12.00	0.00	20.02	6.065	845.24	T	30.00	0.000
	SCHED 40 WET STEEL				120	9.39	0	75.00	1.935
106	0.00	12.00	0.00	19.96	6.00	0.00	0.00096	3.00	0.061
107	0.00	12.00	0.00	20.02	6.065	142.76	2T	60.00	0.000
	SCHED 40 WET STEEL				120	1.59	0	63.00	0.061
107	ACV	12.00		20.02		988.00			
108	1.00 psi	12.00		21.03					
108	0.00	12.00	0.00	21.03	6.00	0.00	0.03443	16.00	2.548
109	0.00	-3.00	0.00	30.08	6.065	988.00	2ET	58.00	6.495
	SCHED 40 WET STEEL				120	10.97	0	74.00	9.043

Fire Sprinkler Output Data

Overall Pipe Output Data (cont'd)

Beg. End. Node	Nodal KFactor (K)	Elevation (feet)	Spk/Hose Discharge (gpm)	Residual Pressure (psi)	Nom. Dia. Inside Dia. C-Value	q (gpm) Q (gpm) Velocity (fps)	F. L./ft (psi/ft) Fittings Type-Grp	Pipe-Len. Fit-Len. Tot-Len. (ft)	PF-(psi) PE-(psi) PT-(psi)
109	0.00	-3.00	0.00	30.08	6.00	0.00	0.02415	90.00	2.174
1000	0.00	-3.00	0.00	32.25	5.993	988.00	-----	0.00	0.000
	PVC, CLASS 200				150	11.24	0	90.00	2.174

Fire Sprinkler Output Data

Overall Sprinkler Output Data

Flowing Sprinkler Node No.	Area Group Code	Sprinkler KFactor (K)	Sprinkler Elevation (feet)	Residual Pressure (psi)	Flowing Area (ft²)	Flowing Density (gpm/ft²)	Sprinkler Discharge (gpm)
1		8.00	12.00	15.18	113.00	0.276	31.16
Sub Totals For Non-Group					113.00	0.276	31.16
2		8.00	12.00	15.19	113.00	0.276	31.18
Sub Totals For Non-Group					113.00	0.276	31.18
3		8.00	12.00	15.23	113.00	0.276	31.22
Sub Totals For Non-Group					113.00	0.276	31.22
4		8.00	12.00	15.32	113.00	0.277	31.31
Sub Totals For Non-Group					113.00	0.277	31.31
5		8.00	12.00	15.29	113.00	0.277	31.28
Sub Totals For Non-Group					113.00	0.277	31.28
6		8.00	12.00	15.14	113.00	0.275	31.13
Sub Totals For Non-Group					113.00	0.275	31.13
7		8.00	12.00	15.06	113.00	0.275	31.04
Sub Totals For Non-Group					113.00	0.275	31.04
8		8.00	12.00	15.02	113.00	0.274	31.00
Sub Totals For Non-Group					113.00	0.274	31.00
9		8.00	12.00	15.00	113.00	0.274	30.98
Sub Totals For Non-Group					113.00	0.274	30.98
10		8.00	12.00	15.39	113.00	0.278	31.39
Sub Totals For Non-Group					113.00	0.278	31.39
11		8.00	12.00	15.41	113.00	0.278	31.40
Sub Totals For Non-Group					113.00	0.278	31.40
12		8.00	12.00	15.45	113.00	0.278	31.45
Sub Totals For Non-Group					113.00	0.278	31.45
13		8.00	12.00	15.54	113.00	0.279	31.54
Sub Totals For Non-Group					113.00	0.279	31.54
14		8.00	12.00	15.52	113.00	0.279	31.51
Sub Totals For Non-Group					113.00	0.279	31.51
15		8.00	12.00	15.37	113.00	0.278	31.36
Sub Totals For Non-Group					113.00	0.278	31.36
16		8.00	12.00	15.28	113.00	0.277	31.27
Sub Totals For Non-Group					113.00	0.277	31.27
17		8.00	12.00	15.24	113.00	0.276	31.23
Sub Totals For Non-Group					113.00	0.276	31.23
18		8.00	12.00	15.22	113.00	0.276	31.21
Sub Totals For Non-Group					113.00	0.276	31.21
19		8.00	12.00	15.49	113.00	0.279	31.49
Sub Totals For Non-Group					113.00	0.279	31.49

Fire Sprinkler Output Data

Overall Sprinkler Output Data (cont'd)

Flowing Sprinkler Node No.	Area Group Code	Sprinkler KFactor (K)	Sprinkler Elevation (feet)	Residual Pressure (psi)	Flowing Area (ft²)	Flowing Density (gpm/ft²)	Sprinkler Discharge (gpm)
20		8.00	12.00	15.51	113.00	0.279	31.50
Sub Totals For Non-Group					113.00	0.279	31.50
21		8.00	12.00	15.55	113.00	0.279	31.54
Sub Totals For Non-Group					113.00	0.279	31.54
22		8.00	12.00	15.64	113.00	0.280	31.63
Sub Totals For Non-Group					113.00	0.280	31.63
23		8.00	12.00	15.48	113.00	0.279	31.47
Sub Totals For Non-Group					113.00	0.279	31.47
24		8.00	12.00	15.33	113.00	0.277	31.32
Sub Totals For Non-Group					113.00	0.277	31.32
25		8.00	12.00	15.24	113.00	0.276	31.23
Sub Totals For Non-Group					113.00	0.276	31.23
26		8.00	12.00	15.20	113.00	0.276	31.19
Sub Totals For Non-Group					113.00	0.276	31.19
27		8.00	12.00	15.19	113.00	0.276	31.18
Sub Totals For Non-Group					113.00	0.276	31.18
28		8.00	12.00	19.89	113.00	0.316	35.68
Sub Totals For Non-Group					113.00	0.316	35.68
29		8.00	12.00	19.91	113.00	0.316	35.69
Sub Totals For Non-Group					113.00	0.316	35.69
30		8.00	12.00	19.90	113.00	0.316	35.68
Sub Totals For Non-Group					113.00	0.316	35.68
31		8.00	12.00	19.92	113.00	0.316	35.70
Sub Totals For Non-Group					113.00	0.316	35.70
Totals For All Groups					3503.00	0.282	988.00

Fire Sprinkler Output Summary

Hydraulically Most Demanding Sprinkler Node

HMD Sprinkler Node Number:	9
HMD Actual Residual Pressure:	15.00 psi
HMD Actual GPM:	30.98 gpm

Sprinkler Summary

Sprinkler System Type:	Wet
Specified Area Of Application:	1500.00 ft²
Minimum Desired Density:	0.200 gpm/ft²
Application Average Density:	0.659 gpm/ft²
Application Average Area Per Sprinkler:	48.39 ft²
Sprinkler Flow:	988.00 gpm
Average Sprinkler Flow:	31.87 gpm

Flow Velocity And Imbalance Summary

Maximum Flow Velocity (In Pipe 109 - 1000)	11.24 ft/sec
Maximum Velocity Pressure (In Pipe 109 - 1000)	0.85 psi
Allowable Maximum Nodal Pressure Imbalance:	0.0000 psi
Actual Maximum Nodal Pressure Imbalance:	0.0000 psi
Actual Average Nodal Pressure Imbalance:	0.0000 psi
Actual Maximum Nodal Flow Imbalance:	0.0000 gpm
Actual Average Nodal Flow Imbalance:	0.0000 gpm

Overall Network Summary

Number Of Unique Pipe Sections:	40
Number Of Flowing Sprinklers:	31
Pipe System Water Volume:	465.63 gal
Sprinkler Flow:	988.00 gpm
Non-Sprinkler Flow:	0.00 gpm
Minimum Required Residual Pressure At System Inflow Node:	32.25 psi
Demand Flow At System Inflow Node:	988.00 gpm

Fire Sprinkler Output Data

Hydraulic Supply/Demand Graph

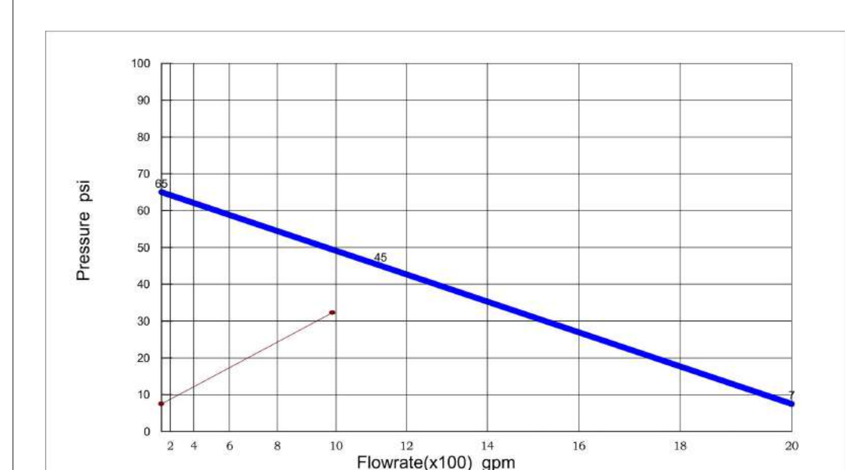

Supply Curve Data
Static Pressure: 65 psi
Test Residual Pressure: 45 psi
Test Flow Rate: 1130 gpm

Demand Curve Data
Calculated Residual Pressure: 32.25 psi
Calculated Flow Rate: 988.00 gpm
Excess Available Residual Pressure At Calculated Flow: 17.15 psi
Pressure Required For First Sprinkler Downstream From Inflow Node To Flow: 7.50 psi

NO.	DATE	DESCRIPTION
1		
2		
3		
4		
5		
6		
7		
8		
9		
10		
11		
12		

SEAL:

DEVELOPMENT INFORMATION:

SITE ADDRESS:

DESIGNED BY:	
CHECKED BY:	
DRAWN BY:	MJ
DATE: 05/2023	PROJECT NO:

DRAWING TITLE:
FIRE PROTECTION C-STORE HYDRAULIC REPORT

SHEET NO:
F 4.01

General Project Data Report

General Data

Project Title:	Roseville -WI-C "Light Hazard" DRY	Project File Name:	Soboba-WI.C-Light Hazard..fiw
Designed By:	BCE - MJ	Date:	202305.15
Code Reference:		Approving Agency:	
Client Name:		Phone:	
Address:	NEC SOBOBA ST & FLORIDA AVE	City, State Zip Code:	HEMET, CA 92544
Company Name:		Representative:	
Company Address:		City And State:	
Phone:			
Building Name:		Building Owner:	
Contact at Building:		Phone at Building:	
Address Of Building:		City, State Zip Code:	

Project Data

Description Of Hazard:	Light Hazard	Sprinkler System Type:	Dry
Design Area Of Water Application:	50 ft²	Maximum Area Per Sprinkler:	113 ft²
Default Sprinkler K-Factor:	5.60 K	Default Pipe Material:	SCHED 40 WET STEEL
Inside Hose Stream Allowance:	0.00 gpm	Outside Hose Stream Allowance:	0.00 gpm
In Rack Sprinkler Allowance:	0.00 gpm		
Sprinkler Specifications			
Make:	Tyco	Model:	
Size:		Temperature Rating:	0 F

Water Supply Test Data

Source Of Information:			
Test Hydrant ID:		Date Of Test:	
Hydrant Elevation:	0 ft	Static Pressure:	65.00 psi
Test Flow Rate:	1130.00 gpm	Test Residual Pressure:	45.00 psi
Calculated System Flow Rate:	70.87 gpm	Calculated Inflow Residual Pressure:	36.17 psi
Available Residual Pressure At System Flow:	64.88 psi		

Calculation Project Data

Calculation Mode:	Demand		
HMD Minimum Residual Pressure:	15.00 psi	Minimum Desired Flow Density:	0.07 gpm/ft²
Maximum Water Velocity:	20.00 ft/s	Maximum Frictional Loss / 100 feet:	0.00 psi
Number Of Active Nodes:	8		
Number Of Active Pipes:	7	Number Of Inactive Pipes:	0
Number Of Active Sprinklers:	3	Number Of Inactive Sprinklers:	0

Fire Sprinkler Input Data

Node Input Data

Node No.	Node Description Branch Description	Area Group Branch Dia. (in)	Sprinkler KFactor (K) Branch Len. (ft)	Pressure Estimate (psi) Branch Stnd Fittings	Node Elev (ft) Branch Non-Stnd Fittings (ft)	Non-Sprinkler Flow (gpm) Branch Sprk KFactor (K)
40	Sprinkler	----	5.60	15.00	12.00	0.00
	----	0.000	0.0	----	0.0	0.00
41	Sprinkler	----	5.60	15.84	12.00	0.00
	----	0.000	0.0	----	0.0	0.00
42	Sprinkler	----	5.60	23.07	12.00	0.00
	----	0.000	0.0	----	0.0	0.00
200	No Discharge	----	N/A	17.27	12.00	0.00
	----	0.000	0.0	----	0.0	0.00
201	No Discharge	----	N/A	25.10	12.00	0.00
	----	0.000	0.0	----	0.0	0.00
202	No Discharge	----	N/A	28.88	12.00	0.00
	----	0.000	0.0	----	0.0	0.00
203	No Discharge	----	N/A	36.12	-3.00	0.00
	----	0.000	0.0	----	0.0	0.00
1000	No Discharge	----	N/A	36.17	-3.00	0.00
	----	0.000	0.0	----	0.0	0.00

Fire Sprinkler Input Data

Pipe Input Data

Beg. Node	End. Node	Pipe Description	Nominal Diameter (inch)	Type Group	Fitting Data	Nominal Length (feet)	Fitting Length (feet)	Total Length (feet)	CFactor (gpm/inch-psi)
40	200	SCHED 40 WET STEEL	1.000	0	ET	8.00	7.00	15.00	120
41	200	SCHED 40 WET STEEL	1.000	0	ET	2.00	7.00	9.00	120
200	201	SCHED 40 WET STEEL	1.000	0	ET	7.00	7.00	14.00	120
42	201	SCHED 40 WET STEEL	1.000	0	ET	2.00	7.00	9.00	120
201	202	SCHED 40 WET STEEL	2.000	0		76.00	0.00	76.00	120
202	203	SCHED 40 WET STEEL	2.000	0		15.00	0.00	15.00	120
203	1000	SCHED 40 WET STEEL	6.000	0	E2T	130.00	74.00	204.00	120

Fire Sprinkler Output Data

Overall Node Groupings Output Data

Pipe Segment Beg. Node	End. Node	Pipe Type Group	Pipe Flow Rate (gpm)	Sprinkler Flow At Beg. Node (gpm)	Non-Sprinkler Flow Out (+) (gpm)	In (-) (gpm)	Beg. Node Residual Pressure (psi)	Imbalance Flow At Beg. Node (gpm)
40	200	0	-21.69	21.69	0.00	0.00	15.00	
41	200	0	-22.29	22.29	0.00	0.00	15.84	0.00000
42	201	0	-26.90	26.90	0.00	0.00	23.07	0.00000
200	40	0	21.69	0.00	0.00	0.00	17.27	0.00000
200	41	0	22.29					
200	201	0	43.97					
201	42	0	26.90	0.00	0.00	0.00	25.10	0.00000
201	200	0	43.97					
201	202	0	-70.87					
202	201	0	70.87	0.00	0.00	0.00	28.88	0.00000
202	203	0	-70.87					
203	202	0	70.87	0.00	0.00	0.00	36.12	0.00000
203	1000	0	-70.87					
1000	203	0	70.87	0.00	0.00	-70.87	36.17	

Fire Sprinkler Output Data

Overall Pipe Output Data

Beg. End. Node	Nodal KFactor (K)	Elevation (feet)	Spk/Hose Discharge (gpm)	Residual Pressure (psi)	Nom. Dia. Inside Dia. C-Value	q (gpm) Q (gpm) Velocity (fps)	F. L./ft (psi/ft) Fittings Type-Grp	Pipe-Len. Fit-Len. Tot-Len. (ft)	PF-(psi) PE-(psi) PT-(psi)
40	5.60	12.00	21.69	15.00	1.00	21.69	0.15125	8.00	2.269
200	0.00	12.00	0.00	17.27	1.049	21.69	ET	7.00	0.000
	SCHED 40 WET STEEL				120	8.05	0	15.00	2.269
41	5.60	12.00	22.29	15.84	1.00	22.29	0.15904	2.00	1.431
200	0.00	12.00	0.00	17.27	1.049	22.29	ET	7.00	0.000
	SCHED 40 WET STEEL				120	8.27	0	9.00	1.431
42	5.60	12.00	26.90	23.07	1.00	26.90	0.22525	2.00	2.027
201	0.00	12.00	0.00	25.10	1.049	26.90	ET	7.00	0.000
	SCHED 40 WET STEEL				120	9.99	0	9.00	2.027
200	0.00	12.00	0.00	17.27	1.00	0.00	0.55928	7.00	7.830
201	0.00	12.00	0.00	25.10	1.049	43.97	ET	7.00	0.000
	SCHED 40 WET STEEL				120	16.32	0	14.00	7.830
201	0.00	12.00	0.00	25.10	2.00	0.00	0.04973	76.00	3.779
202	0.00	12.00	0.00	28.88	2.067	70.87	-----	0.00	0.000
	SCHED 40 WET STEEL				120	6.78	0	76.00	3.779
202	0.00	12.00	0.00	28.88	2.00	0.00	0.04973	15.00	0.746
203	0.00	-3.00	0.00	36.12	2.067	70.87	-----	0.00	6.495
	SCHED 40 WET STEEL				120	6.78	0	15.00	7.241
203	0.00	-3.00	0.00	36.12	6.00	0.00	0.00026	130.00	0.054
1000	0.00	-3.00	0.00	36.17	6.065	70.87	E2T	74.00	0.000
	SCHED 40 WET STEEL				120	0.79	0	204.00	0.054

Fire Sprinkler Output Data

Overall Sprinkler Output Data

Flowing Sprinkler Node No.	Area Group Code	Sprinkler KFactor (K)	Sprinkler Elevation (feet)	Residual Pressure (psi)	Flowing Area (ft²)	Flowing Density (gpm/ft²)	Sprinkler Discharge (gpm)
40		5.60	12.00	15.00	113.00	0.192	21.69
Sub Totals For Non-Group					113.00	0.192	21.69
41		5.60	12.00	15.84	113.00	0.197	22.29
Sub Totals For Non-Group					113.00	0.197	22.29
42		5.60	12.00	23.07	113.00	0.238	26.90
Sub Totals For Non-Group					113.00	0.238	26.90
Totals For All Groups					339.00	0.209	70.87

Fire Sprinkler Output Summary

Hydraulically Most Demanding Sprinkler Node

HMD Sprinkler Node Number:	40	
HMD Actual Residual Pressure:	15.00	psi
HMD Actual GPM:	21.69	gpm

Sprinkler Summary

Sprinkler System Type:	Dry	
Specified Area Of Application:	50.00	ft²
Adjusted Area Of Application:	65.00	ft²
Minimum Desired Density:	0.070	gpm/ft²
Application Average Density:	1.417	gpm/ft²
Application Adjusted Density (not required by NFPA 13):	1.090	gpm/ft²
Application Average Area Per Sprinkler:	16.67	ft²
Adjusted Area Per Sprinkler (not required by NFPA 13):	21.67	ft²
Sprinkler Flow:	70.87	gpm
Average Sprinkler Flow:	23.62	gpm

Flow Velocity And Imbalance Summary

Maximum Flow Velocity (In Pipe 200 - 201)	16.32	ft/sec
Maximum Velocity Pressure (In Pipe 200 - 201)	1.79	psi
Allowable Maximum Nodal Pressure Imbalance:	0.0000	psi
Actual Maximum Nodal Pressure Imbalance:	0.0000	psi
Actual Average Nodal Pressure Imbalance:	0.0000	psi
Actual Maximum Nodal Flow Imbalance:	0.0000	gpm
Actual Average Nodal Flow Imbalance:	0.0000	gpm

Overall Network Summary

Number Of Unique Pipe Sections:	7	
Number Of Flowing Sprinklers:	3	
Pipe System Water Volume:	211.82	gal
Sprinkler Flow:	70.87	gpm
Non-Sprinkler Flow:	0.00	gpm
Minimum Required Residual Pressure At System Inflow Node:	36.17	psi
Demand Flow At System Inflow Node:	70.87	gpm

Fire Sprinkler Output Data

Hydraulic Supply/Demand Graph

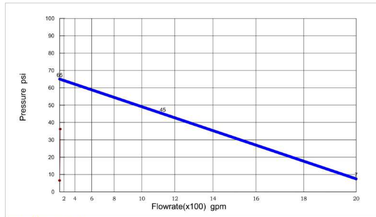

Supply Curve Data

Static Pressure: 65 psi
Test Residual Pressure: 45 psi
Test Flow Rate: 1130 gpm

Demand Curve Data

Calculated Residual Pressure: 36.17 psi
Calculated Flow Rate: 70.87 gpm
Excess Available Residual Pressure At Calculated Flow: 28.71 psi
Pressure Required For First Sprinkler Downstream From Inflow Node To Flow: 6.50 psi

BCE COMPANY

NO.	DATE	DESCRIPTION
1		
2		
3		
4		
5		
6		
7		
8		
9		
10		
11		
12		

SEAL:

DEVELOPMENT INFORMATION:

SITE ADDRESS:

DESIGNED BY:
CHECKED BY:
DRAWN BY: MJ
DATE: 05/2023
PROJECT NO:

DRAWING TITLE:
FIRE PROTECTION W.I.C HYDRAULIC REPORT

SHEET NO:
F 4.02

General Project Data Report

General Data

Project Title:	Soboba-Carwash "Extra Grp 2"	Project File Name:	Soboba-Car Wash-Exra Hazard Grp 2.fw
Designed By:	BCE - MJ	Date:	2023.06.15
Code Reference:		Approving Agency:	
Client Name:		Phone:	
Address:	NEC SOBOBA ST & FLORIDA AVE	City, State Zip Code:	HEMET, CA 92544
Company Name:		Representative:	
Company Address:		City And State:	
Phone:			
Building Name:		Building Owner:	
Contact at Building:		Phone at Building:	
Address Of Building:		City, State Zip Code:	

Project Data

Description Of Hazard:	Ex. Haz. Gp. 2	Sprinkler System Type:	Wet
Design Area Of Water Application:	2000 ft²	Maximum Area Per Sprinkler:	130 ft²
Default Sprinkler K-Factor:	14.00 K	Default Pipe Material:	SCHED 40 WET STEEL
Inside Hose Stream Allowance:	0.00 gpm	Outside Hose Stream Allowance:	0.00 gpm
In Rack Sprinkler Allowance:	0.00 gpm		
Sprinkler Specifications			
Make:	Tyco	Model:	
Size:		Temperature Rating:	0 F

Water Supply Test Data

Source Of Information:			
Test Hydrant ID:		Date Of Test:	
Hydrant Elevation:	0 ft	Static Pressure:	65.00 psi
Test Flow Rate:	1130.00 gpm	Test Residual Pressure:	45.00 psi
Calculated System Flow Rate:	1413.28 gpm	Calculated Inflow Residual Pressure:	41.88 psi
Available Residual Pressure At System Flow:	34.75 psi		

Calculation Project Data

Calculation Mode:	Demand		
HMD Minimum Residual Pressure:	20.00 psi	Minimum Desired Flow Density:	0.30 gpm/ft²
Maximum Water Velocity:	20.00 ft/s	Maximum Frictional Loss / 100 feet:	0.00 psi
Number Of Active Nodes:	29		
Number Of Active Pipes:	28	Number Of Inactive Pipes:	0
Number Of Active Sprinklers:	22	Number Of Inactive Sprinklers:	0

Fire Sprinkler Input Data

Node Input Data

Node No.	Node Description Branch Description	Area Group Branch Dia. (in)	Sprinkler KFactor (K) Branch Len. (ft)	Pressure Estimate (psi) Branch Stnd Fittings	Node Elev (ft) Branch Non-Stnd Fittings (ft)	Non-Sprinkler Flow (gpm) Branch Sprk KFactor (K)
60	Sprinkler ----	---- 0.000	14.00 0.0	20.00 ----	12.00 0.0	0.00 0.00
61	Sprinkler ----	---- 0.000	14.00 0.0	20.00 ----	12.00 0.0	0.00 0.00
62	Sprinkler ----	---- 0.000	14.00 0.0	20.03 ----	12.00 0.0	0.00 0.00
63	Sprinkler ----	---- 0.000	14.00 0.0	20.09 ----	12.00 0.0	0.00 0.00
64	Sprinkler ----	---- 0.000	14.00 0.0	20.20 ----	12.00 0.0	0.00 0.00
65	Sprinkler ----	---- 0.000	14.00 0.0	20.35 ----	12.00 0.0	0.00 0.00
66	Sprinkler ----	---- 0.000	14.00 0.0	20.57 ----	12.00 0.0	0.00 0.00
67	Sprinkler ----	---- 0.000	14.00 0.0	20.28 ----	12.00 0.0	0.00 0.00
68	Sprinkler ----	---- 0.000	14.00 0.0	20.29 ----	12.00 0.0	0.00 0.00
69	Sprinkler ----	---- 0.000	14.00 0.0	20.31 ----	12.00 0.0	0.00 0.00
70	Sprinkler ----	---- 0.000	14.00 0.0	20.38 ----	12.00 0.0	0.00 0.00
71	Sprinkler ----	---- 0.000	14.00 0.0	20.48 ----	12.00 0.0	0.00 0.00
72	Sprinkler ----	---- 0.000	14.00 0.0	20.64 ----	12.00 0.0	0.00 0.00
73	Sprinkler ----	---- 0.000	14.00 0.0	20.86 ----	12.00 0.0	0.00 0.00
74	Sprinkler ----	---- 0.000	14.00 0.0	22.07 ----	12.00 0.0	0.00 0.00
75	Sprinkler ----	---- 0.000	14.00 0.0	22.09 ----	12.00 0.0	0.00 0.00
76	Sprinkler ----	---- 0.000	14.00 0.0	22.12 ----	12.00 0.0	0.00 0.00
77	Sprinkler ----	---- 0.000	14.00 0.0	22.19 ----	12.00 0.0	0.00 0.00

Fire Sprinkler Input Data

Node Input Data (cont'd)

Node No.	Node Description Branch Description	Area Group Branch Dia. (in)	Sprinkler KFactor (K) Branch Len. (ft)	Pressure Estimate (psi) Branch Stnd Fittings	Node Elev (ft) Branch Non-Stnd Fittings (ft)	Non-Sprinkler Flow (gpm) Branch Sprk KFactor (K)
78	Sprinkler ----	---- 0.000	14.00 0.0	22.30 ----	12.00 0.0	0.00 0.00
79	Sprinkler ----	---- 0.000	14.00 0.0	22.47 ----	12.00 0.0	0.00 0.00
80	Sprinkler ----	---- 0.000	14.00 0.0	22.71 ----	12.00 0.0	0.00 0.00
81	Sprinkler ----	---- 0.000	14.00 0.0	23.03 ----	12.00 0.0	0.00 0.00
400	No Discharge ----	---- 0.000	N/A 0.0	22.19 ----	12.00 0.0	0.00 0.00
401	No Discharge ----	---- 0.000	N/A 0.0	22.50 ----	12.00 0.0	0.00 0.00
402	No Discharge ----	---- 0.000	N/A 0.0	23.62 ----	12.00 0.0	0.00 0.00
403	No Discharge ----	---- 0.000	N/A 0.0	24.90 ----	12.00 0.0	0.00 0.00
404	No Discharge ----	---- 0.000	N/A 0.0	25.90 ----	12.00 0.0	0.00 0.00
405	No Discharge ----	---- 0.000	N/A 0.0	34.14 ----	-3.00 0.0	0.00 0.00
1000	No Discharge ----	---- 0.000	N/A 0.0	41.88 ----	-3.00 0.0	0.00 0.00

Fire Sprinkler Input Data

Pipe Input Data

Beg. Node	End. Node	Pipe Description	Nominal Diameter (inch)	Type Group	Fitting Data	Nominal Length (feet)	Fitting Length (feet)	Total Length (feet)	CFactor (gpm/inch-psi)
60	61	SCHED 40 WET STEEL	6.000	0	E	8.00	14.00	22.00	120
61	62	SCHED 40 WET STEEL	6.000	0	T	8.00	30.00	38.00	120
62	63	SCHED 40 WET STEEL	6.000	0	T	8.00	30.00	38.00	120
63	64	SCHED 40 WET STEEL	6.000	0	T	8.00	30.00	38.00	120
64	65	SCHED 40 WET STEEL	6.000	0	T	8.00	30.00	38.00	120
65	66	SCHED 40 WET STEEL	6.000	0	T	8.00	30.00	38.00	120
66	400	SCHED 40 WET STEEL	6.000	0	E5T	45.00	164.00	209.00	120
67	68	SCHED 40 WET STEEL	6.000	0	E	8.00	14.00	22.00	120
68	69	SCHED 40 WET STEEL	6.000	0	T	8.00	30.00	38.00	120
69	70	SCHED 40 WET STEEL	6.000	0	T	8.00	30.00	38.00	120
70	71	SCHED 40 WET STEEL	6.000	0	T	8.00	30.00	38.00	120
71	72	SCHED 40 WET STEEL	6.000	0	T	8.00	30.00	38.00	120
72	73	SCHED 40 WET STEEL	6.000	0	T	8.00	30.00	38.00	120
73	401	SCHED 40 WET STEEL	6.000	0	E5T	45.00	164.00	209.00	120
74	75	SCHED 40 WET STEEL	6.000	0	3ET	8.00	72.00	80.00	120
75	76	SCHED 40 WET STEEL	6.000	0	T	4.00	30.00	34.00	120
76	77	SCHED 40 WET STEEL	6.000	0	T	8.00	30.00	38.00	120
77	78	SCHED 40 WET STEEL	6.000	0	T	8.00	30.00	38.00	120
78	79	SCHED 40 WET STEEL	6.000	0	T	8.00	30.00	38.00	120
79	80	SCHED 40 WET STEEL	6.000	0	T	8.00	30.00	38.00	120
80	81	SCHED 40 WET STEEL	6.000	0	T	8.00	30.00	38.00	120
81	403	SCHED 40 WET STEEL	6.000	0	E5T	8.00	164.00	172.00	120
400	401	SCHED 40 WET STEEL	6.000	0	T	10.00	30.00	40.00	120
401	402	SCHED 40 WET STEEL	6.000	0	T	10.00	30.00	40.00	120
403	404	Alarm Check Valve	1.000	Loss					
404	405	SCHED 40 WET STEEL	6.000	0	E	12.00	14.00	26.00	120
405	1000	PVC, CLASS 200	6.000	0	T	120.00	45.30	165.30	150
402	403	SCHED 40 WET STEEL	6.000	0	ET	2.00	44.00	46.00	120

Fire Sprinkler Output Data

Overall Node Groupings Output Data

Pipe Segment Beg. Node	End. Node	Pipe Type Group	Pipe Flow Rate (gpm)	Sprinkler Flow At Beg. Node (gpm)	Non-Sprinkler Flow Out (+) (gpm)	In (-) (gpm)	Beg. Node Residual Pressure (psi)	Imbalance Flow At Beg. Node (gpm)
60	61	0	-62.61	62.61	0.00	0.00	20.00	
61 61	60 62	0 0	62.61 -125.23	62.62	0.00	0.00	20.00	0.00000
62 62	61 63	0 0	125.23 -187.89	62.66	0.00	0.00	20.03	0.00000
63 63	62 64	0 0	187.89 -250.65	62.76	0.00	0.00	20.09	0.00000
64 64	63 65	0 0	250.65 -313.56	62.92	0.00	0.00	20.20	0.00000
65 65	64 66	0 0	313.56 -376.73	63.16	0.00	0.00	20.35	0.00000
66 66	65 400	0 0	376.73 -440.23	63.50	0.00	0.00	20.57	0.00000
67	68	0	-63.05	63.05	0.00	0.00	20.28	0.00000
68 68	67 69	0 0	63.05 -126.10	63.05	0.00	0.00	20.29	0.00000
69 69	68 70	0 0	126.10 -189.20	63.10	0.00	0.00	20.31	0.00000
70 70	69 71	0 0	189.20 -252.40	63.19	0.00	0.00	20.38	0.00000
71 71	70 72	0 0	252.40 -315.75	63.36	0.00	0.00	20.48	0.00000
72 72	71 73	0 0	315.75 -379.36	63.60	0.00	0.00	20.64	0.00000
73 73	72 401	0 0	379.36 -443.30	63.94	0.00	0.00	20.86	0.00000
74	75	0	-65.78	65.78	0.00	0.00	22.07	0.00000
75 75	74 76	0 0	65.78 -131.58	65.80	0.00	0.00	22.09	0.00000
76 76	75 77	0 0	131.58 -197.42	65.84	0.00	0.00	22.12	0.00000
77 77	76 78	0 0	197.42 -263.37	65.94	0.00	0.00	22.19	0.00000
78 78	77 79	0 0	263.37 -329.48	66.11	0.00	0.00	22.30	0.00000
79 79	78 80	0 0	329.48 -395.85	66.37	0.00	0.00	22.47	0.00000

Fire Sprinkler Output Data

Overall Node Groupings Output Data (cont'd)

Pipe Segment Beg. Node	End. Node	Pipe Type Group	Pipe Flow Rate (gpm)	Sprinkler Flow At Beg. Node (gpm)	Non-Sprinkler Flow Out (+) (gpm)	In (-) (gpm)	Beg. Node Residual Pressure (psi)	Imbalance Flow At Beg. Node (gpm)
80 80	79 81	0 0	395.85 -462.57	66.72	0.00	0.00	22.71	0.00000
81 81	80 403	0 0	462.57 -529.76	67.19	0.00	0.00	23.03	0.00000
400 400	66 401	0 0	440.23 -440.23	0.00	0.00	0.00	22.19	0.00000
401 401 401	73 400 402	0 0 0	443.30 440.23 -883.53	0.00	0.00	0.00	22.50	0.00000
402 402	401 403	0 0	883.53 -883.53	0.00	0.00	0.00	23.62	0.00000
403 403 403	81 402 404	0 0 0	529.76 883.53 -1413.28	0.00	0.00	0.00	24.90	-0.00004
404 404	403 405	0 0	1413.28 -1413.28	0.00	0.00	0.00	25.90	0.00004
405 405	404 1000	0 0	1413.28 -1413.28	0.00	0.00	0.00	34.14	0.00000
1000	405	0	1413.28	0.00	0.00	-1413.28	41.88	

Fire Sprinkler Output Data

Overall Pipe Output Data

Beg. End. Node	Nodal KFactor (K)	Elevation (feet)	Spk/Hose Discharge (gpm)	Residual Pressure (psi)	Nom. Dia. Inside Dia. C-Value	Q (gpm) Q (gpm) Velocity (fps)	F. L./ft (psi/ft) Fittings Type-Grp	Pipe-Len. Fit-Len. Tot-Len. (ft)	PF-(psi) PE-(psi) PT-(psi)
60	14.00	12.00	62.61	20.00	6.00	62.61	0.00021	8.00	0.005
61	14.00	12.00	62.62	20.00	6.065	62.61	E	14.00	0.000
	SCHED 40 WET STEEL				120	0.70	0	22.00	0.005
61	14.00	12.00	62.62	20.00	6.00	62.62	0.00075	8.00	0.029
62	14.00	12.00	62.66	20.03	6.065	125.23	T	30.00	0.000
	SCHED 40 WET STEEL				120	1.39	0	38.00	0.029
62	14.00	12.00	62.66	20.03	6.00	62.66	0.00160	8.00	0.061
63	14.00	12.00	62.76	20.09	6.065	187.89	T	30.00	0.000
	SCHED 40 WET STEEL				120	2.09	0	38.00	0.061
63	14.00	12.00	62.76	20.09	6.00	62.76	0.00272	8.00	0.103
64	14.00	12.00	62.92	20.20	6.065	250.65	T	30.00	0.000
	SCHED 40 WET STEEL				120	2.78	0	38.00	0.103
64	14.00	12.00	62.92	20.20	6.00	62.92	0.00412	8.00	0.157
65	14.00	12.00	63.16	20.35	6.065	313.56	T	30.00	0.000
	SCHED 40 WET STEEL				120	3.48	0	38.00	0.157
65	14.00	12.00	63.16	20.35	6.00	63.16	0.00578	8.00	0.220
66	14.00	12.00	63.50	20.57	6.065	376.73	T	30.00	0.000
	SCHED 40 WET STEEL				120	4.18	0	38.00	0.220
67	14.00	12.00	63.05	20.28	6.00	63.05	0.00021	8.00	0.005
68	14.00	12.00	63.05	20.29	6.065	63.05	E	14.00	0.000
	SCHED 40 WET STEEL				120	0.70	0	22.00	0.005
68	14.00	12.00	63.05	20.29	6.00	63.05	0.00076	8.00	0.029
69	14.00	12.00	63.10	20.31	6.065	126.10	T	30.00	0.000
	SCHED 40 WET STEEL				120	1.40	0	38.00	0.029
69	14.00	12.00	63.10	20.31	6.00	63.10	0.00162	8.00	0.061
70	14.00	12.00	63.19	20.38	6.065	189.20	T	30.00	0.000
	SCHED 40 WET STEEL				120	2.10	0	38.00	0.061
70	14.00	12.00	63.19	20.38	6.00	63.19	0.00276	8.00	0.105
71	14.00	12.00	63.36	20.48	6.065	252.40	T	30.00	0.000
	SCHED 40 WET STEEL				120	2.80	0	38.00	0.105
71	14.00	12.00	63.36	20.48	6.00	63.36	0.00417	8.00	0.159
72	14.00	12.00	63.60	20.64	6.065	315.75	T	30.00	0.000
	SCHED 40 WET STEEL				120	3.51	0	38.00	0.159
72	14.00	12.00	63.60	20.64	6.00	63.60	0.00586	8.00	0.223
73	14.00	12.00	63.94	20.86	6.065	379.36	T	30.00	0.000
	SCHED 40 WET STEEL				120	4.21	0	38.00	0.223
74	14.00	12.00	65.78	22.07	6.00	65.78	0.00023	8.00	0.018
75	14.00	12.00	65.80	22.09	6.065	65.78	3ET	72.00	0.000
	SCHED 40 WET STEEL				120	0.73	0	80.00	0.018

Fire Sprinkler Output Data

Overall Pipe Output Data (cont'd)

Beg. End. Node	Nodal KFactor (K)	Elevation (feet)	Spk/Hose Discharge (gpm)	Residual Pressure (psi)	Nom. Dia. Inside Dia. C-Value	Q (gpm) Q (gpm) Velocity (fps)	F. L./ft (psi/ft) Fittings Type-Grp	Pipe-Len. Fit-Len. Tot-Len. (ft)	PF-(psi) PE-(psi) PT-(psi)
75	14.00	12.00	65.80	22.09	6.00	65.80	0.00083	4.00	0.028
76	14.00	12.00	65.84	22.12	6.065	131.58	T	30.00	0.000
	SCHED 40 WET STEEL				120	1.46	0	34.00	0.028
76	14.00	12.00	65.84	22.12	6.00	65.84	0.00175	8.00	0.067
77	14.00	12.00	65.94	22.19	6.065	197.42	T	30.00	0.000
	SCHED 40 WET STEEL				120	2.19	0	38.00	0.067
77	14.00	12.00	65.94	22.19	6.00	65.94	0.00298	8.00	0.113
78	14.00	12.00	66.11	22.30	6.065	263.37	T	30.00	0.000
	SCHED 40 WET STEEL				120	2.92	0	38.00	0.113
78	14.00	12.00	66.11	22.30	6.00	66.11	0.00451	8.00	0.172
79	14.00	12.00	66.37	22.47	6.065	329.48	T	30.00	0.000
	SCHED 40 WET STEEL				120	3.66	0	38.00	0.172
79	14.00	12.00	66.37	22.47	6.00	66.37	0.00634	8.00	0.241
80	14.00	12.00	66.72	22.71	6.065	395.85	T	30.00	0.000
	SCHED 40 WET STEEL				120	4.40	0	38.00	0.241
80	14.00	12.00	66.72	22.71	6.00	66.72	0.00846	8.00	0.321
81	14.00	12.00	67.19	23.03	6.065	462.57	T	30.00	0.000
	SCHED 40 WET STEEL				120	5.14	0	38.00	0.321
66	14.00	12.00	63.50	20.57	6.00	63.50	0.00772	45.00	1.613
400	0.00	12.00	0.00	22.19	6.065	440.23	E5T	164.00	0.000
	SCHED 40 WET STEEL				120	4.89	0	209.00	1.613
73	14.00	12.00	63.94	20.86	6.00	63.94	0.00782	45.00	1.634
401	0.00	12.00	0.00	22.50	6.065	443.30	E5T	164.00	0.000
	SCHED 40 WET STEEL				120	4.92	0	209.00	1.634
400	0.00	12.00	0.00	22.19	6.00	0.00	0.00772	10.00	0.309
401	0.00	12.00	0.00	22.50	6.065	440.23	T	30.00	0.000
	SCHED 40 WET STEEL				120	4.89	0	40.00	0.309
401	0.00	12.00	0.00	22.50	6.00	0.00	0.02800	10.00	1.120
402	0.00	12.00	0.00	23.62	6.065	883.53	T	30.00	0.000
	SCHED 40 WET STEEL				120	9.81	0	40.00	1.120
81	14.00	12.00	67.19	23.03	6.00	67.19	0.01087	8.00	1.869
403	0.00	12.00	0.00	24.90	6.065	529.76	E5T	164.00	0.000
	SCHED 40 WET STEEL				120	5.88	0	172.00	1.869
402	0.00	12.00	0.00	23.62	6.00	0.00	0.02800	2.00	1.288
403	0.00	12.00	0.00	24.90	6.065	883.53	ET	44.00	0.000
	SCHED 40 WET STEEL				120	9.81	0	46.00	1.288
403	ACV	12.00		24.90		1413.28			
404	1.00 psi	12.00		25.90					

NO.	DATE	DESCRIPTION
1		
2		
3		
4		
5		
6		
7		
8		
9		
10		
11		
12		

SEAL:

DEVELOPMENT INFORMATION:

SITE ADDRESS:

DESIGNED BY:	
CHECKED BY:	
DRAWN BY:	MJ
DATE: 05/2023	PROJECT NO:

DRAWING TITLE:
FIRE PROTECTION CAR-WASH HYDRAULIC REPORT-1

SHEET NO:
F 4.03

BCE COMPANY

Fire Sprinkler Output Data

Overall Pipe Output Data (cont'd)

Beg. End. Node	Nodal KFactor (K)	Elevation (feet)	Spk/Hose Discharge (gpm)	Residual Pressure (psi)	Nom. Dia. Inside Dia. C-Value	q (gpm) Q (gpm) Velocity (fps)	F. L./ft (psi/ft) Fittings Type-Grp	Pipe-Len. Fit-Len. Tot-Len. (ft)	PF-(psi) PE-(psi) PT-(psi)
404	0.00	12.00	0.00	25.90	6.00	0.00	0.06678	12.00	1.736
405	0.00	-3.00	0.00	34.14	6.065	1413.28	E	14.00	6.495
	SCHED 40 WET STEEL				120	15.69	0	26.00	8.231
405	0.00	-3.00	0.00	34.14	6.00	0.00	0.04684	120.00	7.742
1000	0.00	-3.00	0.00	41.88	5.993	1413.28	T	45.30	0.000
	PVC, CLASS 200				150	16.07	0	165.30	7.742

Fire Sprinkler Output Data

Overall Sprinkler Output Data

Flowing Sprinkler Node No.	Area Group Code	Sprinkler KFactor (K)	Sprinkler Elevation (feet)	Residual Pressure (psi)	Flowing Area (ft²)	Flowing Density (gpm/ft²)	Sprinkler Discharge (gpm)
60		14.00	12.00	20.00	130.00	0.482	62.61
Sub Totals For Non-Group					130.00	0.482	62.61
61		14.00	12.00	20.00	130.00	0.482	62.62
Sub Totals For Non-Group					130.00	0.482	62.62
62		14.00	12.00	20.03	130.00	0.482	62.66
Sub Totals For Non-Group					130.00	0.482	62.66
63		14.00	12.00	20.09	130.00	0.483	62.76
Sub Totals For Non-Group					130.00	0.483	62.76
64		14.00	12.00	20.20	130.00	0.484	62.92
Sub Totals For Non-Group					130.00	0.484	62.92
65		14.00	12.00	20.35	130.00	0.486	63.16
Sub Totals For Non-Group					130.00	0.486	63.16
66		14.00	12.00	20.57	130.00	0.488	63.50
Sub Totals For Non-Group					130.00	0.488	63.50
67		14.00	12.00	20.28	130.00	0.485	63.05
Sub Totals For Non-Group					130.00	0.485	63.05
68		14.00	12.00	20.29	130.00	0.485	63.05
Sub Totals For Non-Group					130.00	0.485	63.05
69		14.00	12.00	20.31	130.00	0.485	63.10
Sub Totals For Non-Group					130.00	0.485	63.10
70		14.00	12.00	20.38	130.00	0.486	63.19
Sub Totals For Non-Group					130.00	0.486	63.19
71		14.00	12.00	20.48	130.00	0.487	63.36
Sub Totals For Non-Group					130.00	0.487	63.36
72		14.00	12.00	20.64	130.00	0.489	63.60
Sub Totals For Non-Group					130.00	0.489	63.60
73		14.00	12.00	20.86	130.00	0.492	63.94
Sub Totals For Non-Group					130.00	0.492	63.94
74		14.00	12.00	22.07	130.00	0.506	65.78
Sub Totals For Non-Group					130.00	0.506	65.78
75		14.00	12.00	22.09	130.00	0.506	65.80
Sub Totals For Non-Group					130.00	0.506	65.80
76		14.00	12.00	22.12	130.00	0.506	65.84
Sub Totals For Non-Group					130.00	0.506	65.84
77		14.00	12.00	22.19	130.00	0.507	65.94
Sub Totals For Non-Group					130.00	0.507	65.94
78		14.00	12.00	22.30	130.00	0.509	66.11
Sub Totals For Non-Group					130.00	0.509	66.11

Fire Sprinkler Output Data

Overall Sprinkler Output Data (cont'd)

Flowing Sprinkler Node No.	Area Group Code	Sprinkler KFactor (K)	Sprinkler Elevation (feet)	Residual Pressure (psi)	Flowing Area (ft²)	Flowing Density (gpm/ft²)	Sprinkler Discharge (gpm)
79		14.00	12.00	22.47	130.00	0.511	66.37
Sub Totals For Non-Group					130.00	0.511	66.37
80		14.00	12.00	22.71	130.00	0.513	66.72
Sub Totals For Non-Group					130.00	0.513	66.72
81		14.00	12.00	23.03	130.00	0.517	67.19
Sub Totals For Non-Group					130.00	0.517	67.19
Totals For All Groups					2860.00	0.494	1413.28

Fire Sprinkler Output Summary

Hydraulically Most Demanding Sprinkler Node

HMD Sprinkler Node Number:	60	
HMD Actual Residual Pressure:	20.00	psi
HMD Actual GPM:	62.61	gpm

Sprinkler Summary

Sprinkler System Type:	Wet	
Specified Area Of Application:	2000.00	ft²
Minimum Desired Density:	0.300	gpm/ft²
Application Average Density:	0.707	gpm/ft²
Application Average Area Per Sprinkler:	90.91	ft²
Sprinkler Flow:	1413.28	gpm
Average Sprinkler Flow:	64.24	gpm

Flow Velocity And Imbalance Summary

Maximum Flow Velocity (In Pipe 405 - 1000)	16.07	ft/sec
Maximum Velocity Pressure (In Pipe 405 - 1000)	1.74	psi
Allowable Maximum Nodal Pressure Imbalance:	0.0000	psi
Actual Maximum Nodal Pressure Imbalance:	0.0000	psi
Actual Average Nodal Pressure Imbalance:	0.0000	psi
Actual Maximum Nodal Flow Imbalance:	0.0000	gpm
Actual Average Nodal Flow Imbalance:	0.0000	gpm

Overall Network Summary

Number Of Unique Pipe Sections:	28	
Number Of Flowing Sprinklers:	22	
Pipe System Water Volume:	596.07	gal
Sprinkler Flow:	1413.28	gpm
Non-Sprinkler Flow:	0.00	gpm
Minimum Required Residual Pressure At System Inflow Node:	41.88	psi
Demand Flow At System Inflow Node:	1413.28	gpm

Fire Sprinkler Output Data

Hydraulic Supply/Demand Graph

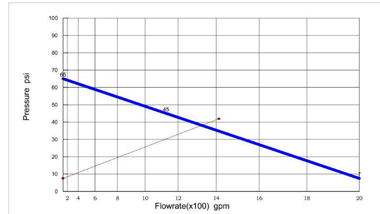

Supply Curve Data

Static Pressure: 65 psi
Test Residual Pressure: 45 psi
Test Flow Rate: 1130 gpm

Demand Curve Data

Calculated Residual Pressure: 41.88 psi
Calculated Flow Rate: 1413.28 gpm
Excess Available Residual Pressure At Calculated Flow: -7.13 psi
Pressure Required For First Sprinkler Downstream From Inflow Node To Flow: 7.50 psi

BCE COMPANY

NO.	DATE	DESCRIPTION
1		
2		
3		
4		
5		
6		
7		
8		
9		
10		
11		
12		

SEAL:

DEVELOPMENT INFORMATION:

SITE ADDRESS:

DESIGNED BY:	
CHECKED BY:	
DRAWN BY:	MJ
DATE: 05/2023	PROJECT NO:

DRAWING TITLE:
FIRE PROTECTION CAR-WASH HYDRAULIC REPORT-2

SHEET NO:
F 4.04

GENERAL NOTES:

1. FIRE ALARM DESIGN AS NFPA 72.
2. WIRING SHALL BE CLASS A TYPE.
3. FIRE ALARM BELLS AND MANUAL PULL STATION SHALL BE MOUNTED ON 98.42" AND 42.48" A.F.F.L RESPECTIVELY.
4. FAULT ISOLATOR MODULES / BOXES SHALL BE USED EVERY 20 ADDRESSABLE DEVICES MAXIMUM.
5. FIRE ALARM CONTROL PANEL SHALL BE INSTALLED WITH TOP ENDS AT 70.86" ABOVE F.F.L. UNLESS OTHERWISE INDICATED.
6. SPACES PROTECTED BY AUTOMATIC FIRE SUPPRESSION SYSTEM (FM200 PACKAGE) SHALL BE INTERFACED WITH FIRE PANEL TO PROVIDE FULL SYSTEM INFORMATION INCLUDING (ALARM 1, ALARM 2, GAS RELEASED, SYSTEM ABORTED, SYSTEM TROUBLE) SIGNALS.
7. SMOKE AND HEAT DETECTORS SHALL BE LEAST 39.37" AWAY FROM AIR-CONDITIONNING FRESH AIR SUPPLY (DIFFUSER, ETC...).
8. ALL PRE-ACTION AND DELUGE VALVE SHALL BE CONTROLLED, EACH WITH ITS OWN ADDRESS, FOR EXACT LOCATION REFER TO MECHANICAL FIRE FIGHTING DRAWINGS.
9. ALL ELECTRO-MECHANICAL SHAFTS SHALL BE PROVIDED WITH SMOKE DETECTORS AS PER CODE REQUIREMENTS.
10. THE OUTGOING & RETURN CIRCUIT CONDUCTORS SHALL NOT BE RUN IN THE SAME CABLE ASSEMBLY, RACEWAY OR ENCLOSURE.
11. PROVIDE 24 VDC AND / OR 12 VDC (AS PER MANUFACTURER REQUIREMENT'S) POWER SUPPLY NETWORK FOR BELLS, STROBE LIGHTS, FIRE AND SMOKE DAMPERS AND DOOR HOLDERS. SUPPLY TO BE FROM NEAREST AVAILABLE SOURCE TO THE APPROVAL OF THE ENGINEER.

Electrical List Of Drawings

Sheet Index	Description	Scale
FA 0.01	FIRE ALARM GENERAL NOTES	NTS
FA 1.02	INSTALLATION DETAILS	NTS
FA 2.01	FIRE ALARM DESIGN MARKET AREA & CAR WASH	3/16"=1'-0"
FA 2.02	FIRE ALARM DESIGN FUEL CANOPY	3/16"=1'-0"
FA 2.03	FIRE ALARM DESIGN SITE PLAN	NTS
FA 3.01	FIRE ALARM RISER SINGLE LINE DIAGRAM	NTS
FA 4.01	FIRE ALARM CUTSHEET SHEET 1 OF 2	NTS
FA 4.02	FIRE ALARM CUTSHEET SHEET 2 OF 2	NTS

NO.	DATE	DESCRIPTION
1		
2		
3		
4		
5		
6		
7		
8		
9		
10		
11		
12		

SEAL:

DEVELOPMENT INFORMATION:

SITE ADDRESS:

HEMET, CA 92544

DESIGNED BY:

CHECKED BY:

DRAWN BY: AB

DATE: 06/2023

PROJECT NO:

DRAWING TITLE:

FIRE ALARM GENERAL NOTES

SHEET NO:

FA-0.01

BCE COMPANY

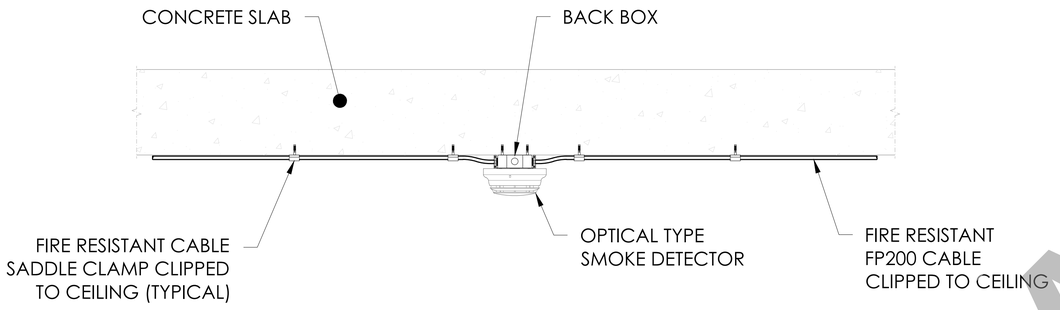

CEILING SLAB FLASHED CABLE MOUNTED TO SMOKE DETECTOR - INSTALLATION DETAIL

#

Scale 1:20

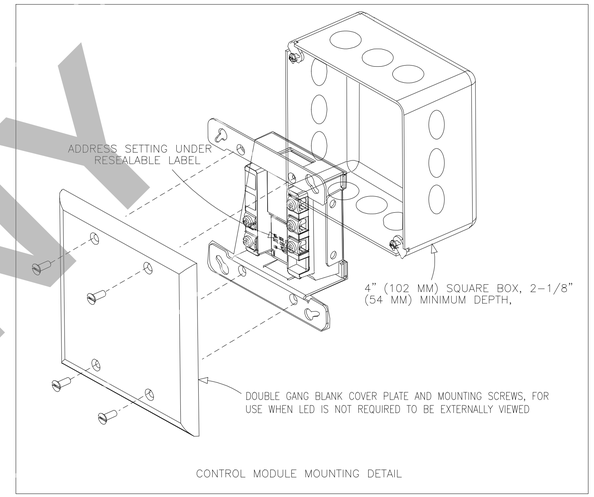

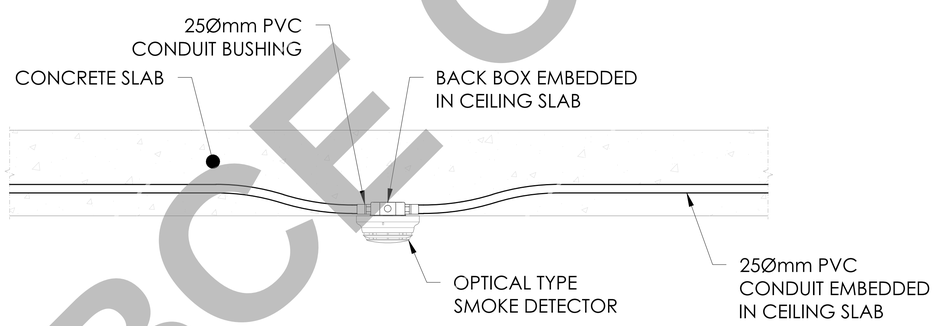

CEILING SLAB EMBEDDED CONDUIT MOUNTED TO SMOKE DETECTOR - INSTALLATION DETAIL

#

Scale 1:20

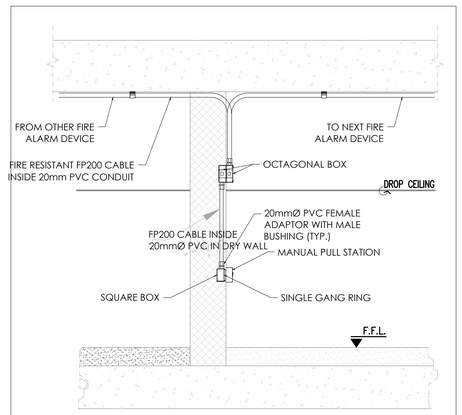

DETAIL 1 SCALE: NTS — MANUAL PULL STATION INSTALLATION DETAIL

BCE COMPANY

NO.	DATE	DESCRIPTION
1		
2		
3		
4		
5		
6		
7		
8		
9		
10		
11		
12		

SEAL:

DEVELOPMENT INFORMATION:

SITE ADDRESS:

HEMET, CA 92544

DESIGNED BY:

CHECKED BY:

DRAWN BY: AB

DATE: 06/2023

PROJECT NO:

DRAWING TITLE:

INSTALLATION DETAILS

SHEET NO:

FA-1.01

FIRE ALARM CONTROL PANEL.
INTERNAL
BATTERIES SHALL BE MAINTAINED
OTHERWISE
THE CONTROL PANEL SHALL BE
SUPPLIED
BY A STANDALONE UPS (15MIN) WITH
1KVA.

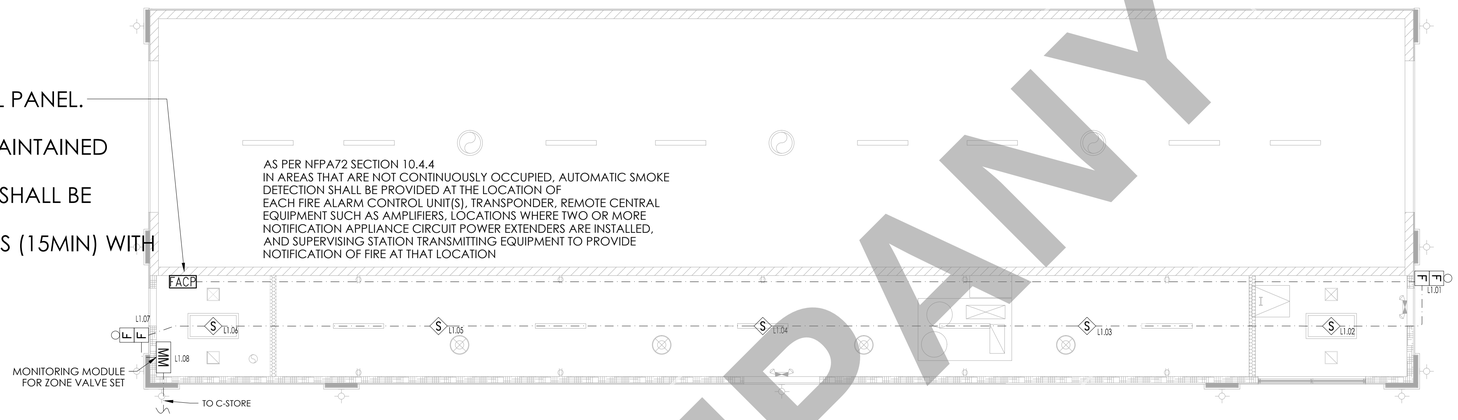

CAR WASH CEILING FIRE ALARM PLAN

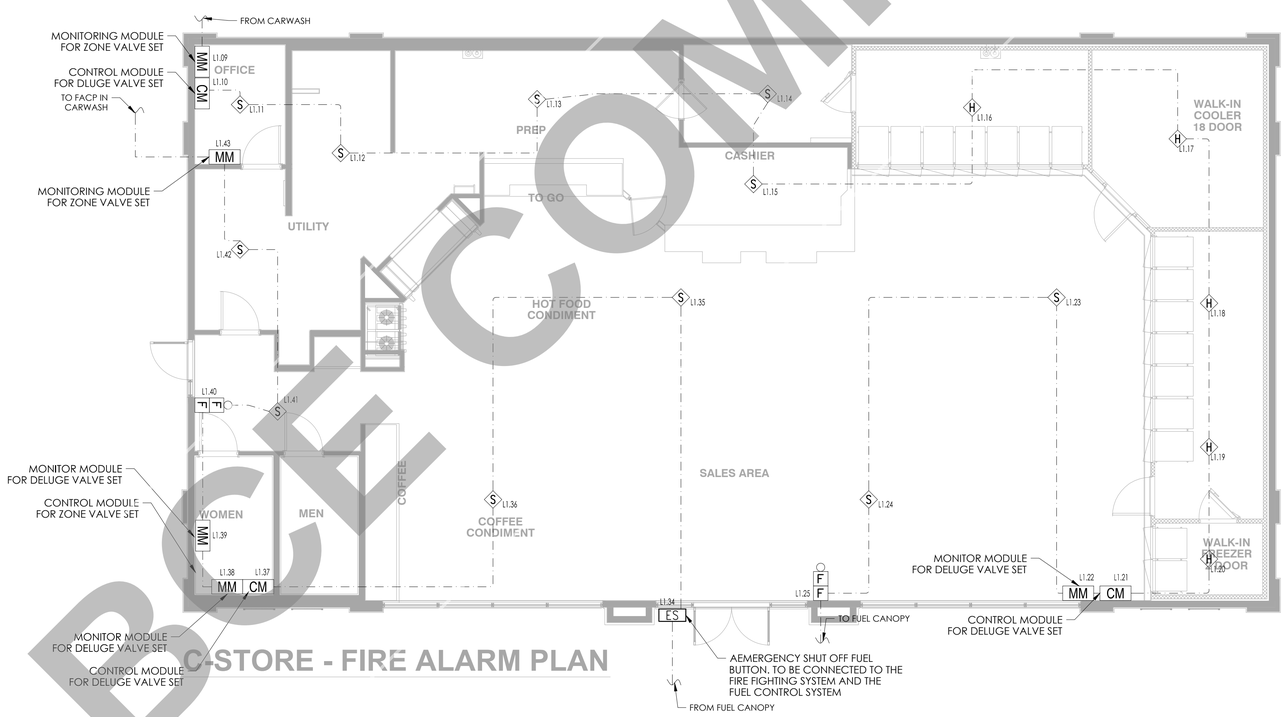

C-STORE - FIRE ALARM PLAN

GENERAL NOTES:

1. FIRE ALARM DESIGN AS NFPA 72.
2. WIRING SHALL BE CLASS A TYPE.
3. FIRE ALARM BELLS AND MANUAL PULL STATION SHALL BE MOUNTED ON 98.42" AND 42.48" A.F.F.L RESPECTIVELY.
4. FAULT ISOLATOR MODULES / BOXES SHALL BE USED EVERY 20 ADDRESSABLE DEVICES MAXIMUM.
5. FIRE ALARM CONTROL PANEL SHALL BE INSTALLED WITH TOP ENDS AT 70.86" ABOVE F.F.L. UNLESS OTHERWISE INDICATED.
6. SPACES PROTECTED BY AUTOMATIC FIRE SUPPRESSION SYSTEM (FM200 PACKAGE) SHALL BE INTERFACED WITH FIRE PANEL TO PROVIDE FULL SYSTEM INFORMATION INCLUDING (ALARM 1, ALARM 2, GAS RELEASED, SYSTEM ABORTED, SYSTEM TROUBLE) SIGNALS.
7. SMOKE AND HEAT DETECTORS SHALL BE LEAST 39.37" AWAY FROM AIR-CONDITIONNING FRESH AIR SUPPLY (DIFFUSER, ETC...).
8. ALL PRE-ACTION AND DELUGE VALVE SHALL BE CONTROLLED, EACH WITH ITS OWN ADDRESS. FOR EXACT LOCATION REFER TO MECHANICAL FIRE FIGHTING DRAWINGS.
9. ALL ELECTRO-MECHANICAL SHAFTS SHALL BE PROVIDED WITH SMOKE DETECTORS AS PER CODE REQUIREMENTS.
10. THE OUTGOING & RETURN CIRCUIT CONDUCTORS SHALL NOT BE RUN IN THE SAME CABLE ASSEMBLY, RACEWAY OR ENCLOSURE.
11. PROVIDE 24 VDC AND / OR 12 VDC (AS PER MANUFACTURER REQUIREMENTS) POWER SUPPLY NETWORK FOR BELLS, STROBE LIGHTS, FIRE AND SMOKE DAMPERS AND DOOR HOLDERS. SUPPLY TO BE FROM NEAREST AVAILABLE SOURCE TO THE APPROVAL OF THE ENGINEER.

SYMBOLS	DESCRIPTION
FIRE ALARM:	
S	ADDRESSABLE SMOKE DETECTOR.
H	ADDRESSABLE HEAT DETECTOR.
F	WALL MOUNTED ADDRESSABLE MANUAL CALL POINT.
F	WALL MOUNTED FIRE BELL.
CM	CONTROL MODULE.
MM	MONITORING MODULE.
FACP	FIRE ALARM CONTROL PANEL

NO.	DATE	DESCRIPTION
1		
2		
3		
4		
5		
6		
7		
8		
9		
10		
11		
12		

SEAL:

DEVELOPMENT INFORMATION:

SITE ADDRESS:

HEMET, CA 92544

DESIGNED BY:	
CHECKED BY:	
DRAWN BY:	AB
DATE: 06/2023	PROJECT NO:

DRAWING TITLE:

FIRE ALARM DESIGN MARKET AREA & CAR WASH

SHEET NO:

F A - 2 . 0 1

BCE COMPANY

AS PER NFPA72 SECTION 10.4.4
IN AREAS THAT ARE NOT CONTINUOUSLY OCCUPIED, AUTOMATIC SMOKE DETECTION SHALL BE PROVIDED AT THE LOCATION OF EACH FIRE ALARM CONTROL UNIT(S), TRANSPONDER, REMOTE CENTRAL EQUIPMENT SUCH AS AMPLIFIERS, LOCATIONS WHERE TWO OR MORE NOTIFICATION APPLIANCE CIRCUIT POWER EXTENDERS ARE INSTALLED, AND SUPERVISING STATION TRANSMITTING EQUIPMENT TO PROVIDE NOTIFICATION OF FIRE AT THAT LOCATION

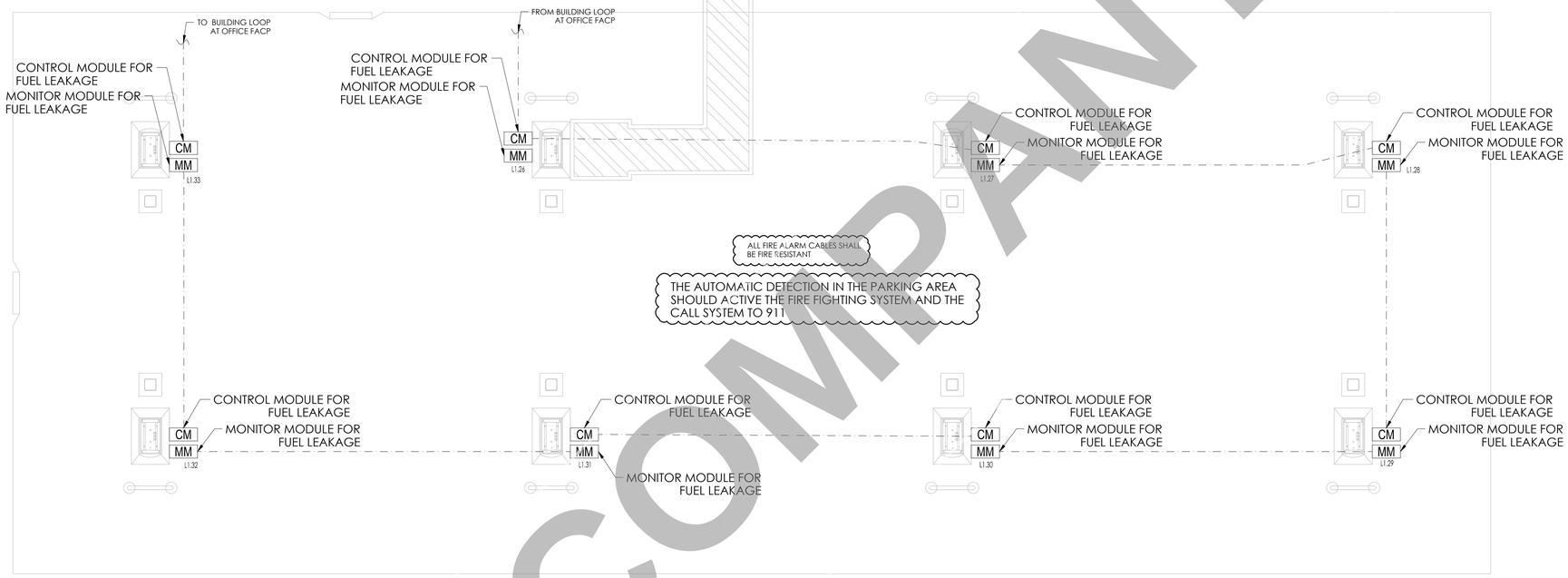

FUEL CANOPY BUILDING#2 - FIRE ALARM PLAN

GENERAL NOTES:

1. FIRE ALARM DESIGN AS NFPA 72.
2. WIRING SHALL BE CLASS A TYPE.
3. FIRE ALARM BELLS AND MANUAL PULL STATION SHALL BE MOUNTED ON 98.42" AND 42.48" A.F.F.L RESPECTIVELY.
4. FAULT ISOLATOR MODULES / BOXES SHALL BE USED EVERY 20 ADDRESSABLE DEVICES MAXIMUM.
5. FIRE ALARM CONTROL PANEL SHALL BE INSTALLED WITH TOP ENDS AT 70.86" ABOVE F.F.L. UNLESS OTHERWISE INDICATED.
6. SPACES PROTECTED BY AUTOMATIC FIRE SUPPRESSION SYSTEM (FM200 PACKAGE) SHALL BE INTERFACED WITH FIRE PANEL TO PROVIDE FULL SYSTEM INFORMATION INCLUDING (ALARM 1, ALARM 2, GAS RELEASED, SYSTEM ABORTED, SYSTEM TROUBLE) SIGNALS.
7. SMOKE AND HEAT DETECTORS SHALL BE LEAST 39.37" AWAY FROM AIR-CONDITIONNING FRESH AIR SUPPLY (DIFFUSER, ETC...).
8. ALL PRE-ACTION AND DELUGE VALVE SHALL BE CONTROLLED, EACH WITH ITS OWN ADDRESS, FOR EXACT LOCATION REFER TO MECHANICAL FIRE FIGHTING DRAWINGS.
9. ALL ELECTRO-MECHANICAL SHAFTS SHALL BE PROVIDED WITH SMOKE DETECTORS AS PER CODE REQUIREMENTS.
10. THE OUTGOING & RETURN CIRCUIT CONDUCTORS SHALL NOT BE RUN IN THE SAME CABLE ASSEMBLY, RACEWAY OR ENCLOSURE.
11. PROVIDE 24 VDC AND / OR 12 VDC (AS PER MANUFACTURER REQUIREMENT'S) POWER SUPPLY NETWORK FOR BELLS, STROBE LIGHTS, FIRE AND SMOKE DAMPERS AND DOOR HOLDERS. SUPPLY TO BE FROM NEAREST AVAILABLE SOURCE TO THE APPROVAL OF THE ENGINEER.

SYMBOLS	DESCRIPTION
FIRE ALARM:	
S	ADDRESSABLE SMOKE DETECTOR.
H	ADDRESSABLE HEAT DETECTOR.
F	WALL MOUNTED ADDRESSABLE MANUAL CALL POINT.
F	WALL MOUNTED FIRE BELL.
CM	CONTROL MODULE.
MM	MONITORING MODULE.
FACP	FIRE ALARM CONTROL PANEL

NO.	DATE	DESCRIPTION
1		
2		
3		
4		
5		
6		
7		
8		
9		
10		
11		
12		

SEAL:

DEVELOPMENT INFORMATION:

SITE ADDRESS:

HEMET, CA 92544

DESIGNED BY:
CHECKED BY:
DRAWN BY: AB
DATE: 06/2023
PROJECT NO:

DRAWING TITLE:
FIRE ALARM DESIGN FUEL CANOPY

SHEET NO:
FA-2.02

BCE COMPANY

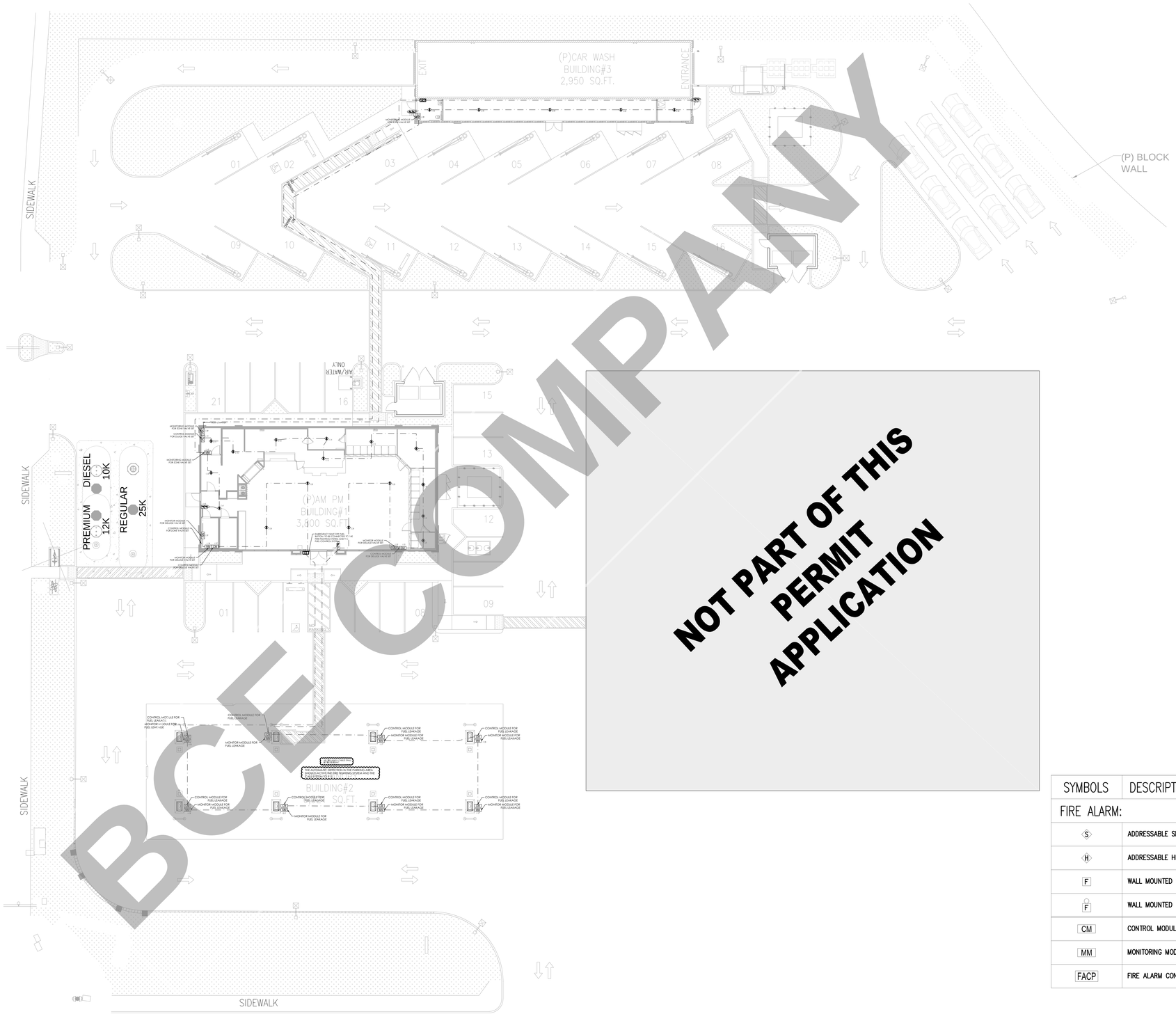

BCE COMPANY

NOT PART OF THIS PERMIT APPLICATION

SYMBOLS	DESCRIPTION
FIRE ALARM:	
S	ADDRESSABLE SMOKE DETECTOR.
H	ADDRESSABLE HEAT DETECTOR.
F	WALL MOUNTED ADDRESSABLE MANUAL CALL POINT.
F	WALL MOUNTED FIRE BELL.
CM	CONTROL MODULE.
MM	MONITORING MODULE.
FACP	FIRE ALARM CONTROL PANEL

NO.	DATE	DESCRIPTION
1		
2		
3		
4		
5		
6		
7		
8		
9		
10		
11		
12		

SEAL:

DEVELOPMENT INFORMATION:

SITE ADDRESS:

HEMET, CA 92544

DESIGNED BY:	
CHECKED BY:	
DRAWN BY:	AB
DATE: 06/2023	PROJECT NO:

DRAWING TITLE:

FIRE ALARM DESIGN SITE PLAN

SHEET NO:

F A - 2 . 0 2

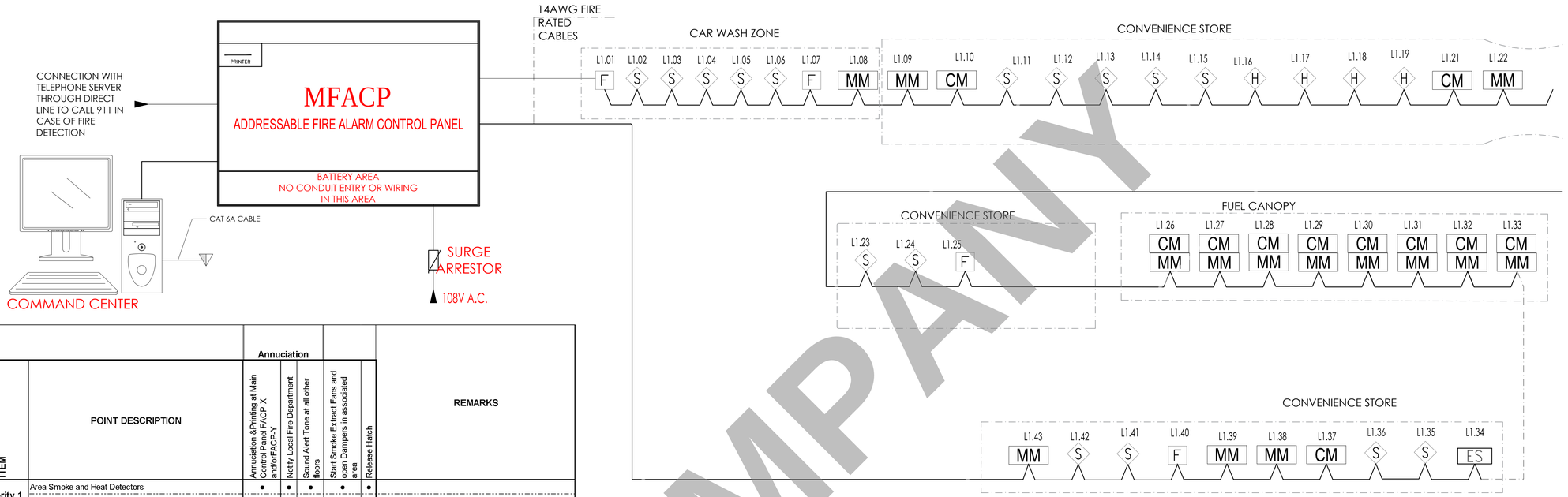

FIRE ALARM RISER DIAGRAM

ITEM	POINT DESCRIPTION	Annuciation: Annuciation &Printing at Main Control Panel FACP-X and/orFACP-Y	Annuciation: Notify Local Fire Department	Annuciation: Sound Alert Tone at all other floors	Start Smoke Extract Fans and open Dampers in associated area	Release Hatch	REMARKS
Priority 1 Alarms	Area Smoke and Heat Detectors	•	•	•	•	•	
	Return Air Duct Detector	•	•	•	•	•	
	Fire Fighting Flow switch	•	•	•	•	•	
Secondary Systems	Manual Break Glass Station	•					
	Electrical Special systems	•					
	Hatch Release Smoke Detector	•					
Monitoring	Fire Pump Monitoring: Low amd Fault Pressure, Power, Operation	•					
	Fire Fighting Storage Tanks: Low Level	•					
	System/Warning Fault	•					

Notes:
- Time delay to be agreed with local fire department.
- Audio music systems must be interfaced to switch off when alarm sounds.

ITEM	DESCRIPTION	STANDBY CURRENT PER UNIT (AMPS)		QTY		TOTAL STANDBY CURRENT PER ITEM	ALARM CURRENT PER UNIT (AMPS)		QTY		TOTAL ALARM CURRENT PER ITEM
FACU	Fire Alarm Control Unit	0.1000	X	1	=	0.1000	0.2000	X	1	=	0.2000
SD	Smoke Detector	0.0010	X	16	=	0.0160	0.0500	X	20	=	1.0000
HD	Heat Detector	0.0000	X	5	=	0.0000	0.0000	X	6	=	0.0000
RLY	Relay (failsafe)	0.0500	X	25	=	1.2500	0.0000	X	1	=	0.0000
RLY	Relay (not failsafe)	0.0000	X	0	=	0.0000	0.0500	X	15	=	0.7500
HS	Horn-Strobe	0.0000	X	4	=	0.0000	0.0750	X	10	=	0.7500
DH	Door Holder	0.0650	X	0	=	0.0000	0.0000	X	0	=	0.0000
ANN	Annunciator	0.1000	X	4	=	0.4000	0.2000	X	1	=	0.2000
MS	Manual Station	0.0000	X	4	=	0.0000	0.0000	X	5	=	0.0000
WF	Waterflow Switch	0.0000	X	1	=	0.0000	0.0000	X	4	=	0.0000
TS	Tamper Switch	0.0000	X	1	=	0.0000	0.0000	X	4	=	0.0000
0	0	0.0000	X	0	=	0.0000	0.0000	X	0	=	0.0000
0	0	0.0000	X	0	=	0.0000	0.0000	X	0	=	0.0000
				TOTAL SYSTEM STANDBY CURRENT (AMPS)		1.7660			TOTAL SYSTEM ALARM CURRENT (AMPS)		2.9000

Prepared for:	REQUIRED STANDBY TIME (HRS) NFPA 72-2002 4.4.1.5.3.1		TOTAL SYSTEM STANDBY CURRENT (AMPS)		REQUIRED STANDBY CAPACITY (AMP-HOURS)	REQUIRED ALARM TIME (HOURS) NFPA 72-2002 4.4.1.5.3.1		TOTAL SYSTEM ALARM CURRENT (AMPS)		REQUIRED ALARM CAPACITY (AMP-HOURS)
	24	X	1.7660	=	42.3840	0.083	X	2.9000	=	0.2407

Prepared by:	REQUIRED STANDBY CAPACITY (AMP-		REQUIRED ALARM CAPACITY (AMP-HOURS)		TOTAL CAPACITY (AMP-HOURS)	TOTAL CAPACITY (AMP-HOURS)		SAFETY FACTOR		ADJUSTED BATTERY CAPACITY (AMP-
	42.38	+	0.2407	=	42.6247	42.6247	X	120%	=	51

GENTEX CORPORATION

CommandCalc
Voltage Drop Calculation Tool

Setup | **Circuit Summary** | Print Circuit Summary | Print Circuit Devices

Circuit Number	Circuit Name	Supply Voltage (VDC)	Alarm Current (Rt. Click)	Wire Type	Ohms / 1000 ft.	Length (Feet)	Total Resistance (Ohms)	Voltage Last Device
1	F.1	24	0.286	#14AWG Stranded	3.26	210	1.37	23.61
2	F.2	24	0.286	#12AWG Stranded	2.05	550	2.26	23.36
			0.000				0.00	0.00
			0.000				0.00	0.00
			0.000				0.00	0.00
			0.000				0.00	0.00
			0.000				0.00	0.00
			0.000				0.00	0.00
			0.000				0.00	0.00
			0.000				0.00	0.00
			0.000				0.00	0.00
			0.000				0.00	0.00
			0.000				0.00	0.00
			0.000				0.00	0.00
			0.000				0.00	0.00
			0.000				0.00	0.00
			0.000				0.00	0.00
			0.000				0.00	0.00
			0.000				0.00	0.00

BCE COMPANY

NO.	DATE	DESCRIPTION
1		
2		
3		
4		
5		
6		
7		
8		
9		
10		
11		
12		

SEAL:

DEVELOPMENT INFORMATION:

SITE ADDRESS:

HEMET, CA 92544

DESIGNED BY:
CHECKED BY:
DRAWN BY: AB
DATE: 06/2023
PROJECT NO:

DRAWING TITLE:
FIRE ALARM RISER SINGLE LINE DIAGRAM

SHEET NO:
FA-3.01

Simplex

True*Alarm* Smoke Detectors

*UL, ULC, CSFM Listed; FM Approved; MEA (NYC) Acceptance**

TrueAlarm Photoelectric Smoke Detector with TrueSense Smoke/Heat Detection

Features

TrueAlarm detection with TrueSense operation combines photoelectric detection with heat detection to provide a multi-mode detector with *four* detection mechanisms:

- Stable and reliable photoelectric smoke detection with built-in **TrueAlarm** sensitivity drift compensation
- Resettable, thermistor-based fixed temperature detection
- Resettable, thermistor-based rate-of-rise temperature detection
- And **TrueSense detection**, a patented correlation of smoke activity and thermal activity providing intelligent fire detection earlier than with either activity alone

Functional chamber enclosure:

- Louvered design enhances smoke capture by directing flow to chamber
- Entrance areas are minimally visible when ceiling mounted
- Operation is for ceiling or wall mounting

Multi-function LED indicator:

- Indicates normal and alarm conditions
- Provides status during magnetic functional test

Magnetically operated functional test:

- Initiates alarm and verifies performance
- Identifies general sensitivity status using detector LED pulses (normal, more sensitive, or less sensitive)
- With detectors categorized as normal or needing cleaning or other service, maintenance priorities can be more easily determined

Available options:

- Bases for 2-wire or 4-wire operation
- Auxiliary alarm relay output
- Remote alarm indicating LED

Designed for EMI compatibility

UL listed to Standard 268

* This product has been approved by the California State Fire Marshal (CSFM) pursuant to Section 13144.1 of the California Health and Safety Code. See CSFM Listing 7272-0062:219 for allowable values and/or conditions concerning material presented in this document. It is subject to re-examination, revision, and possible cancellation. Accepted for use – City of New York Department of Buildings – MEA35-93E. Additional listings may be applicable; contact your local Simplex product supplier for the latest status. Listings and approvals under Simplex Time Recorder Co. are the property of Tyco Safety Products Westminster.

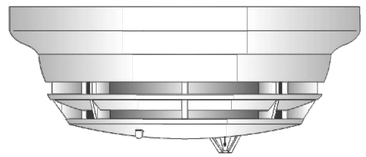

4098-9602 TrueSense Detector Mounted in Base

Description

Simplex® 4098-9602 detectors combine photoelectric smoke detection technology and quick response thermistor-based heat detection technology into a sophisticated, intelligent detector that analyzes *each* of these activities *and their combination* to determine whether alarm conditions are present.

Four Detection Modes. An onboard microprocessor provides four independent detection modes: photoelectric detection with TrueAlarm sensitivity drift compensation, fixed temperature heat detection, rate-of-rise temperature heat detection, and TrueSense photoelectric/heat trending analysis and alarm detection. If any of these alarm conditions are experienced, an alarm is initiated.

Specifications

Voltage	15 to 32 VDC, from Control Panel IDC
Standby Current	100 µA @ 24 VDC
Alarm Current, 2-Wire Operation	Up to 86 mA maximum, exact current is determined by alarm current limiting of connected IDC (initiating device circuit)
Alarm Current, 4-Wire Operation	24 mA typical @ 24 VDC
Auxiliary Relay Ratings	Refer to page 3 under Product Selection
Rate-of-Rise Temperature Alarm**	≥ 20° F/min (11° C/min), ***only in effect at temperatures above 90° F (32° C)***
Fixed Temperature Alarm	135° F (57° C)
UL Listed Temp. Range**	32° F to 100° F (0° C to 38° C)
Operating Temp. Range	15° F to 100° F (-9° C to 38° C)
Storage Temp. Range	0° to 140° F (-18° C to 60° C)
Smoke Obscuration Sensitivity	2.8%/ft Nominal, per UL268
Air Velocity Range	0-2000 ft/min (0-610 m/min)
Humidity Range	10% to 95% RH from 32° F to 122° F (0° C to 50° C)
Color	Frost White
Dimensions	4-7/8" Dia. x 2" H, mounted in base (124 mm x 51 mm), refer to p.3 for detail

** Always locate this and all rate-of-rise heat detection devices away from extremes of temperature fluctuation.

S4098-0017-4 1/2015

Simplex

MX Technology Addressable Devices

*UL Listed**

Addressable Smoke and Heat Sensors; Multi-Sensors (Smoke & Heat), Isolator Bases, Sounder Bases, and Accessories

Features

MX Technology addressable smoke sensor, heat sensor and multi-sensor features:

- **Smoke Sensors** provide accurate photoelectric sensing
- **Heat Sensors** provide electronic heat sensing with multiple alarm options
- **Multi-Sensors** combine photoelectric sensing with heat sensing
- **Isolator Bases** monitor line condition and separates input from output to isolate short circuits
- **Sounder Bases** provide multiple tone and volume selections and are available as MX Loop powered, or powered from separate 24 VDC
- **Sounder-Beacon Bases** are loop powered and provide the sounder base functions plus a visible flashing light
- **Accessories** include remote LED indicators, address flags and labels, and base adapters
- Smoke sensors and accessories are listed to UL 268, heat sensors to UL 521

Compatibility:

- For use with Simplex® 4100ES, 4010ES and 4100U Series fire alarm control panels equipped with an MX Loop Module
- Analog sensor information is communicated to the host control panel and analyzed using the MX Fastlogic algorithm
- The MX Fastlogic algorithm is considered an Expert algorithm that uses real fire data as a basis for the alarm decision

Installation and Service Features:

- Each sensor is supplied with an integral dust cover for protection during storage and installation and is easily removed when commissioning the system
- Unique 'park' position for commissioning and service
- The address flag is attached to the base to minimize errors during service
- Detector addressing is conveniently programmed using the MX Service tool
- Bases with multiple mounting options simplify installation

Description

Rugged Construction. MX compatible 4098-Series sensors provide robust and reliable construction which has undergone stringent environmental testing. Electrical contacts are molded into the plastic to eliminate movement. Construction uses durable, fire resistant FR110 plastic.

Detection Modes. MX Sensors communicate to the MX Loop Module using MX Technology communications. This allows each detector to operate in one or two of several detection modes, thus allowing it to be easily optimized to the risk.

4098-5202 Photoelectric Sensor and 4098-5203 Photoelectric Sensor with Heat Sensing

4098-5201 Heat Sensor

Photo Sensor on 4098-5215 Sounder Base

Photo Sensor on 4098-5212 Sounder-Beacon Base

* Listings under Simplex Time Recorder Co. are the property of Tyco Fire Protection Products.

S4098-0045-4 3/2015

BCE COMPANY

NO.	DATE	DESCRIPTION
1		
2		
3		
4		
5		
6		
7		
8		
9		
10		
11		
12		

SEAL:

DEVELOPMENT INFORMATION:

SITE ADDRESS:

HEMET, CA 92544

DESIGNED BY:	
CHECKED BY:	
DRAWN BY:	AB
DATE: 06/2023	PROJECT NO:

DRAWING TITLE:

FIRE ALARM CUTSHEET
SHEET 1 OF 2

SHEET NO:

FA-4.01

Simplex

True*Alert* Multi-Candela Notification Appliances

*UL, ULC, CSFM Listed; FM Approved; MEA (NYC) Acceptance**

Smart*Sync* Operation Audible/Visible Notification with Horn and Synchronized Flash, Non-Addressable

Features

Audible/visible (A/V) notification appliances with efficient electronic horn and high output xenon strobe, available for wall or ceiling mount

- Operation is compatible with ADA requirements (refer to important installation information on page 3)
- Rugged, high impact, flame retardant thermoplastic housings are available in red or white with clear lens

Operates over a two-wire SmartSync circuit to provide:

- Horns that are controlled separately from strobes on the same two-wire circuit
- "On-until-silenced" and "on-until-reset" operation on the same two-wire pair
- SmartSync horn activation of Temporal pattern, March Time pattern (at 60 BPM), or on continuously
- Strobe appliances on the same circuit operating at a synchronized 1 Hz flash rate
- Class B operation requires connection to a compatible SmartSync NAC or to SmartSync Control Module (SCM) 4905-9938
- Class A operation when connected to the 4905-9938 SCM or with 4100U series fire alarm control panel NACs

Wall mount A/Vs features:

- Wiring terminals are accessible from the front of the housing providing easy access for installation, inspection, and testing
- Covers are available separately to convert housing color
- Available UL listed sound damper for locations requiring attenuation of 5 to 6 dBA (stairwells, small rooms, highly reverberant areas, etc.)

Optional adapters and wire guards:

- Wall mount A/V adapters are available to cover surface mounted electrical boxes and to adapt to Simplex® 2975-9145 boxes
- UL listed red wire guards are available for wall or ceiling mount A/Vs

Visible notification appliance (strobe):

- 24 VDC xenon strobe; intensity is selectable as 15, 30, 75, or 110 candela with visible selection jumper secured behind strobe housing
- UL listed to Standard 1971
- Regulated circuit design ensures consistent flash output and provides controlled inrush current

Audible notification appliance (horn):

- Low current, 24 VDC electronic horn with harmonically rich sound output suitable for either steady or coded operation (Temporal or 60 BPM March Time pattern)
- UL listed to Standard 464

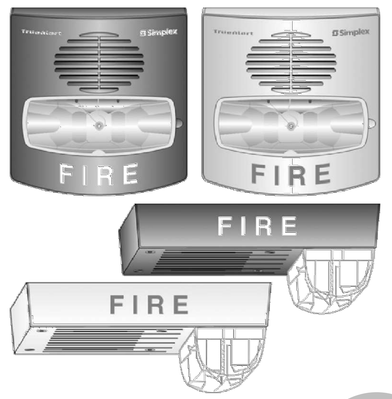

Wall and Ceiling Mount A/Vs

Description

Multi-Candela TrueAlert A/Vs with horn and synchronized strobe provide convenient installation to standard electrical boxes. The enclosure designs are both impact and vandal resistant and provide a convenient strobe intensity selection. Since each model can be selected for strobe intensity output, on-site model inventory is minimized and changes encountered during construction can be easily accommodated.

Wall mount A/V housings are a one-piece assembly (including lens) that mounts to a single or double gang, or 4" square standard electrical box. The cover can be quickly removed (a tool is required) and covers are available separately for color conversion.

Ceiling mount A/Vs install using standard 4" electrical boxes. Color choice is determined by model number.

Strobe Intensity Selection

During installation, a selection plug at the back of the housing determines the desired strobe intensity. An attached flag with black letters on a highly visible yellow background allows the selected intensity to be seen at the side of the strobe lens.

* This product has been approved by the California State Fire Marshal (CSFM) pursuant to Section 13144.1 of the California Health and Safety Code. See CSFM Listing 7125-0026:317 for allowable values and/or conditions concerning material presented in this document. Accepted for use – City of New York Department of Buildings – MEA35-93E. Refer to page 2 for listing status of wire guards. Additional listings may be applicable; contact your local Simplex product supplier for the latest status. Listings and approvals under Simplex Time Recorder Co. are the property of Tyco Fire Protection Products.

S4906-0002-6 11/2014

Simplex

True*Alert* Notification Appliances

*UL, ULC, CSFM Listed; FM Approved; MEA (NYC) Acceptance**

Smart*Sync* Control Module and Strobe Synchronization Modules

Features

Convert conventional Notification Appliance Circuits (NACs) into SmartSync circuits or synchronized strobe circuits:

- Simplex® SmartSync Control Modules combine separate horn and strobe NAC inputs into a 2-wire control that can silence horns while maintaining synchronized strobe operation
- Synchronized Flash Modules provide a 2-wire synchronized strobe output that also operates compatible 24 VDC conventional reverse polarity notification appliances

SmartSync Control Module (SCM) provides two-wire control to separately activate horns and strobes:

- Operation allows "on-until-silenced" and "on-until-reset" on the same two-wire pair while maintaining supervision continuity
- SmartSync horns sound as Temporal or March Time pattern, or continuous, controlled separately from strobes on the same circuit
- Strobes on the same circuit operate at a synchronized 1 Hz flash rate
- Output is either Class B or Class A

Conventional strobe synchronization models:

- Encapsulated package with color coded wire leads provides 1 Hz strobe synchronization and maintains supervision continuity
- Conventional horns and other DC appliances operate on the same 2-wire circuit
- Models are available with Class B or Class A output
- Small size allows convenient mounting

UL listed to Standard 1971

* These products have been approved by the California State Fire Marshal (CSFM) pursuant to Section 13144.1 of the California Health and Safety Code. See CSFM Listing 7125-0026:198 and 7125-0026:235 for allowable values and/or conditions concerning material presented in this document. Accepted for use – City of New York Department of Buildings – MEA35-93E. Additional listings may be applicable; contact your local Simplex product supplier for the latest status. Listings and approvals under Simplex Time Recorder Co. are the property of Tyco Fire Protection Products.

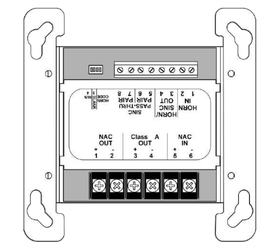

4905-9938 SmartSync Control Module (SCM), Shown Approximately 1/2 Size

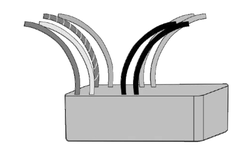

4905-9922, Class A Synchronized Flash Module, Shown Approximately 1/2 Size

Smart*Sync* Control Module (SCM)

Model 4905-9938 SCM (SmartSync Control Module) converts two conventional NAC inputs into a SmartSync two-wire NAC output. One NAC can be programmed to operate as "on-until-silenced" and would be designated as the horn control (non-coded, on continuously during alarm). A second NAC would be programmed to provide "on-until-reset" operation and would be for the visible appliance (strobe) control (also non-coded, on continuously during alarm). Power is supplied by the strobe control NAC.

Selectable Horn output and Synchronized Strobes. In addition to operating the strobe and the horn independently, the SCM can be switch selected to operate the horns as temporal coded, march time coded (60 beats/minute), or on continuously. Strobes are activated with 1 Hz synchronized flashes.

S4905-0003-4 11/2014

BCE COMPANY

NO.	DATE	DESCRIPTION
1		
2		
3		
4		
5		
6		
7		
8		
9		
10		
11		
12		

SEAL:

DEVELOPMENT INFORMATION:

SITE ADDRESS:

HEMET, CA 92544

DESIGNED BY:

CHECKED BY:

DRAWN BY: AB

DATE: 06/2023

PROJECT NO:

DRAWING TITLE: FIRE ALARM CUTSHEET SHEET 2 OF 2

SHEET NO: FA-4.02