Eaton® Fuller
Transmissions

EATON

Super Parts Book

TRIP-0916
October 1995

Keep your Transmission Eaton Fuller.

Within this superbook you will find much information that was either previously available in single page brochures or only through direct contact with Eaton personnel.

A variety of subjects are covered from application information to drive-line yoke information.

We welcome your comments, questions and/or suggestions regarding this new Fuller approach to supplying field reference information.

This book is designed to furnish
"Everything you wanted to know about Eaton Fuller"

For detailed parts information see the proper illustrated parts list

Kit and Assembly Identification for Service Parts

A—Denotes Production Assemblies **K—Denotes Service Kit (Unassembled)** **S—Denotes Service Assembly**

Every effort has been made to ensure the accuracy of all information in this brochure. **However, Eaton Truck Components makes no expressed or implied warranty or representation based on the enclosed information.** Any errors or omissions may be reported to Technical Communications. Eaton Truck Components, P.O. Box 4013, Kalamazoo, MI 49003

Description	Page
Air-Controls	9-11
Air Cylinder "O" Ring Kits	65-66
Air Cylinder Repl Kits	67-68
Air Filter	12
Air Hose Assemblies	13
Air Hose Clamps	14
Air Regulator	12
Air Regulator Brackets	12
Air Tubing	15-18
Air Tubing Connectors	15-16
Air Valve Repair Kits	9
Auxiliary Sections	69-72
Auxiliary Conversion Kits—9 to 13 Speed	73-74
Basic Overhaul and Rebuild Kits	132-136
Bearings—Mid-Range	52
Bearings—Heavy Duty	49-51
Clutch Housing	25-32
Clutch Installation Kit	33
Clutch Release	33
Countershaft Brakes	116-118
Dipstick	34
Front Bearing Cover Heavy Duty	64
Front Bearing Cover Mid Range	53-54
Gasket Kits	131
Gear Kits	75-77
Grease Fittings	20
Input Shaft Heavy Duty	59-63
Input Shaft Mid Range	55-58
Limit Washers	42
Mainshaft Washers	40
Model Designations	139-141
Oil Capacities	138

Description	Page
Oil Cooler	120-122
Oil Pumps	119
Oil Seals	98
Oil Troughs	48
Pipe Tubing Fittings	19-20
PTO Oil Pumps	120
Ratio Controls	23-24
Rear Bearing Covers	80-97
Remote Control	
FS-6106	123
LRC	126-127
MR	123
RLC	128-129
SRC	124-125
Road Speed Governor	21-22
Roadranger Valves	2-8
Sheathing	17-18
Shift Bar Housings	43-47
Shift Labels	142-155
Shift Levers and Housings	35-36
Shift Levers and Housings—Mid Range	37
Shift Lever and Lever Assembly	39
Shift Lever and Lever Assemble—Mid Range	38
Shift Lever Isolator	36
Small Parts Kits	137
Speedometer Gears	99-108
Stub Lever Assembly Kit	36
Synchronizers	78-79
TCB 6-8	116-118
Thru Shaft PTO	130
Torque Limiter	24
Yokes and Flanges	109-115

This one-piece Eaton® Fuller®Roadranger™ Shift Knob updates your air system to the latest technology. Three versions of the newly-designed shift knob are now available in kit form for easy conversion. See the information below for the correct kit number for your transmission model.

K-2013. Kit K-2013 comes complete with an A-4900 shift knob, installation instructions, and all necessary hardware. It replaces both the range and selector valve and requires no modification to your transmission. Just remove the current valve, cut air lines and install. The K-2013 is for use with the following model series:

9513 12513 15613 11613 14613

K-2015. Kit K-2015 comes complete with an A-5015 shift knob, installation instructions, and all necessary hardware. It replaces both the range and deep reduction valve, but requires changing the reduction cylinder cover and re-routing the reduction air lines. The K-2015 is for use with the following model series:

958LL 915 1157DLL 11607LL
11608LL 11615 1258LL 12515
14608LL 14615 15615

K-2030. Kit K-2030 comes complete with an A-5015 shift knob, installation instructions, and all necessary hardware. It replaces the selector valve, but requires changing the reduciton cylinder cover. The K-2030 is for use with the following model series:

613 6613

K-2010. Kit K-2010 comes complete with an A-5010 shift knob, installation instructions, and all necessary hardware. It replaces the range valve on the 6, 7DL, 7L, 8, 9 and 10 speed Roadranger Transmissions, and the range valve only on the 7DLL, 7LL, 8LL, and 15 speed transmissions. No modification is necessary to your transmission. Just remove the current valve, cut air lines and install. The K-2010 is for use with the following model series:

610 910 1157DL 11509
9509 11607L 11608 11609
1110 12509 12510 12609
11610 14608 14609 14610
12610 8609 906 9508
6610

The K-2010 replaces the range valve only on the model numbers listed below. To replace both the range and deep reduction valve, see Kit K-2015.

958LL 12515 11608LL 15615
11607LL 14615 1258LL 1157DLL
11615 915 14608LL

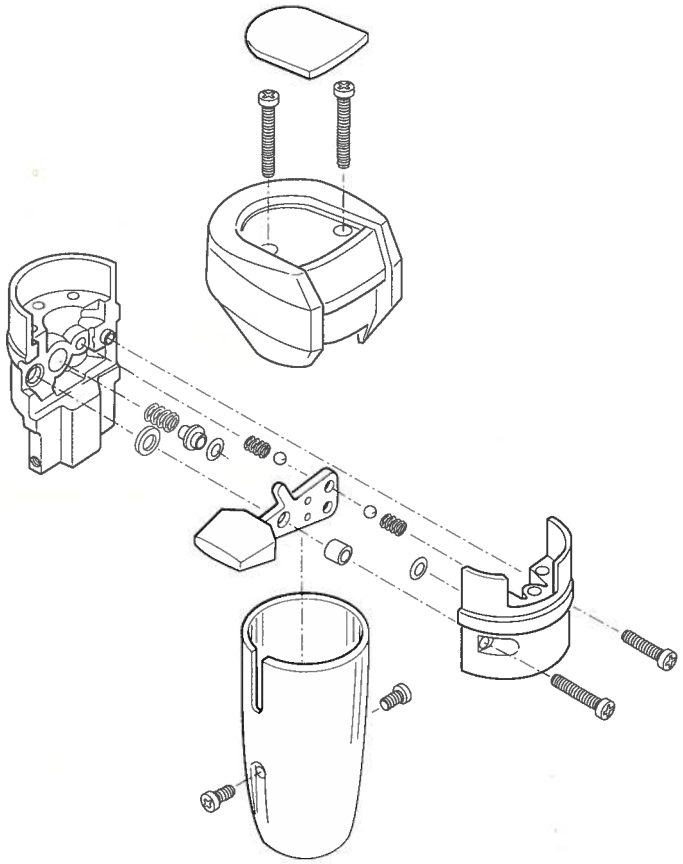

Model Designation	Part Number	Description
7L-8-8L-9-10 Speed	K-1921	Repair Kit Roadranger Valve (A-5010, A-5045, A-5034, A-5035, A-5037, A-5040, A-5043)
13 Speed	K-1826	Repair Kit Roadranger Valve (A-4900, A-5038, A-5041)
7LL-8LL-9MLL-15 Speed	K-1922	Repair Kit Roadranger Valve (A-5015, A-5036, A-5039, A-5042A-5044, A-5046, A-6482)
18 Speed	K-2072	Repair Kit Roadranger Valve (A-5013, A-5429)
RTLO-14610A	K-2347	Repair Kit Roadranger Valve (A-5510)
For Valves Located To Left of Driver		
7L-8-8L-9-10 Speed	K-1921	Repair Kit Roadranger Valve (A-5310)
13 Speed	K-2053	Repair Kit Roadranger Valve (A-5313)
7LL-8LL-15 Speed	K-2055	Repair Kit Roadranger Valve (A-5315)
18 Speed	K-2073	Repair Kit Roadranger Valve (A-5318)

Roadranger Valve Shift Diagram Medallion

For Valves Located to Right of Driver

ROADRANGER VALVE MEDALLIONS

- AVAILABLE IN TWO STYLES
- GENERIC AND WITH SHIFT DIAGRAM

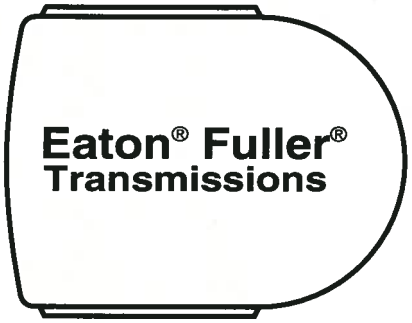

GENERIC
MEDIALLION
20107

ACTUAL SIZE

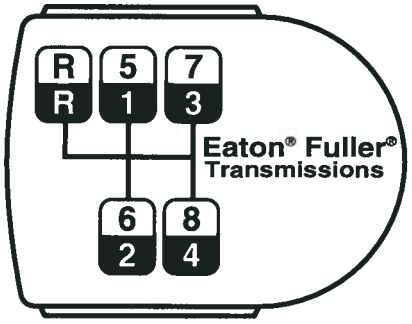

20880
A-5034
A-5010
RT-11608
RT-14608

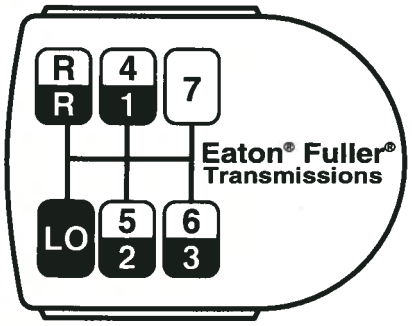

20881
A-5035 A-5036
A-5010 A-5015
RTO-11607L
RTO-11607LL
RTO-11707LL
RTO-11707DLL
RTO-13707DLL
RTO-13707MLL

For Valves Located to Left of Driver

ROADRANGER VALVE MEDALLIONS

- AVAILABLE IN TWO STYLES
- GENERIC AND WITH SHIFT DIAGRAM

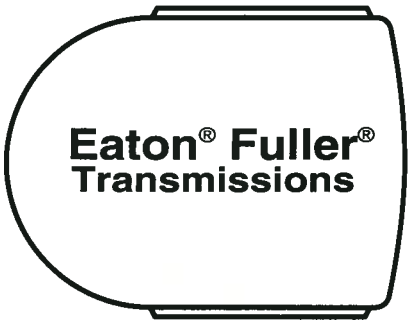

GENERIC
MEDALLION
21691

ACTUAL SIZE

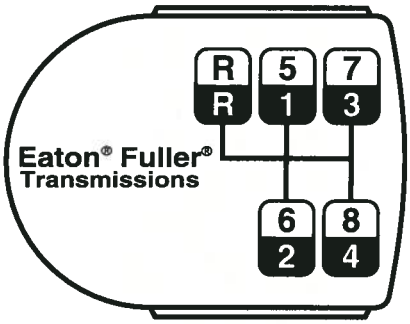

21697
A-5310
RT-11608
RT-14608

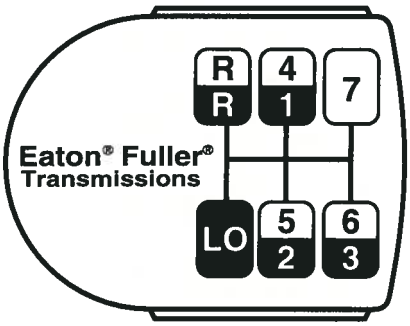

21698
A-5310
A-5315
RTO-11607L
RTO-11607LL
RTO-11707LL

VALVES WITH GENERIC MEDALLION (BLACK)

VALVES WITH SHIFT DIAGRAM MEDALLION (BLUE)

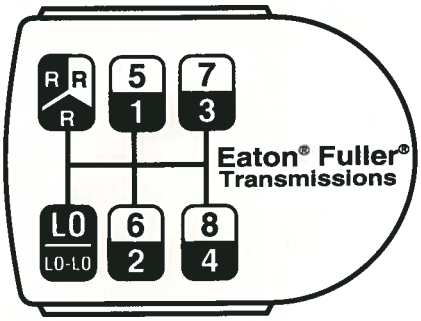

4300367

A-5039
A-5015
RT-7608LL
RTX-11608LL
RTX-11708LL
RTX-14608LL
RTX-14708LL

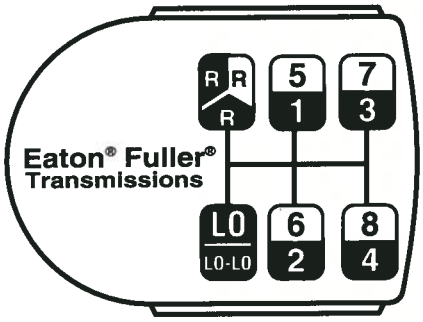

4300369

A-5748
A-5315
RT-7608LL
RTX-11608LL
RTX-11708LL
RTX-14608LL
RTX-14708LL

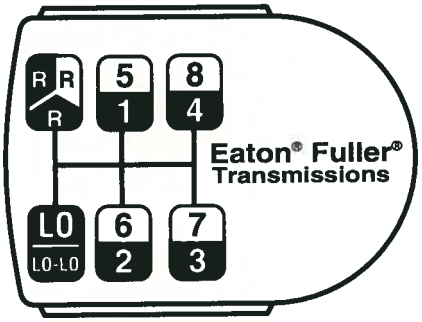

4300368

A-5042
A-5015
RTO-11608LL
RTO-11708LL
RTO-14608LL
RTO-14708LL

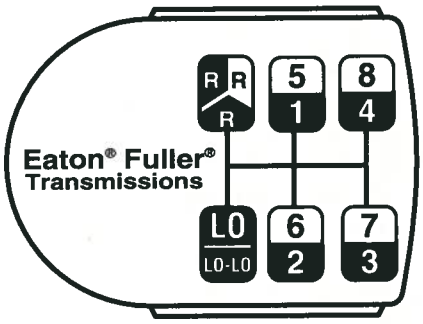

4300370

A-5749
A-5315
RTO-11608LL
RTO-11708LL
RTO-14608LL
RTO-14708LL

VALVES WITH GENERIC MEDALLION (BLACK)

VALVES WITH SHIFT DIAGRAM MEDALLION (BLUE)

Roadranger Valve Shift Diagram Medallion

For Valves Located to Right of Driver

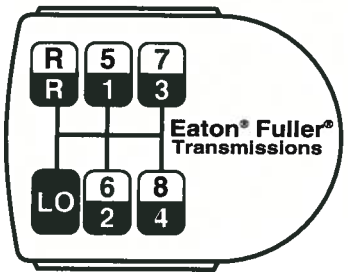

20882

A-5037	A-5038
A-5010	**A-4900**
RT-6609A	RT-11613
RT-8608L	RTO-11613
RT-8609	RTOX-11613
RT-11609A	RTO-11813
RTX-11609A	RT-14613
RTX-11609B	RTO-14613
RT-11709A	RTOX-14613
RT-11709B	RTO-14813
RTX-11709A	RT-15613
RTX-11709B	RTO-15613
RT-12609A	RTO-15813
RTX-12609A	RTLO-14613
RT-12709A	
RT-12709B	
RTX-12709A	
RTX-12709B	
RT-14609A	
RTX-14609A	
RTX-14609B	
RT-14709A	A-5429
RT-14709B	A-5013
RTX-14709A	RTO-15618
RTX-14709B	RTLO-14618
RT-13609A	RTLO-16618
RTX-13609A	
RTX-13609B	
RTX-16709B	
RT-11709H	
RT-12709H	
RT-13709H	

RT-14709H
RTX-11709H
RTX-12709H
RTX-13709H
RTX-14709H
RTX-16709H

For Valves Located to Left of Driver

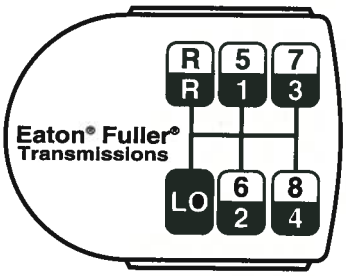

21699

A-5310	**A-5313**
RT-6609A	RT-11613
RT-8608L	RTO-11613
RT-8609	RTOX-11613
RT-11609A	RTO-11813
RTX-11609A	RT-14613
RTX-11609B	RTO-14613
RT-11709A	RTOX-14613
RT-11709B	RTO-14813
RTX-11709A	RT-15613
RTX-11709B	RTO-15613
RT-12609A	RTO-15813
RTX-12609A	RTLO-14613
RT-12709	
RT-12709B	
RTX-12709A	
RTX-12709B	
RT-14609A	
RTX-14609A	
RTX-14609B	
RT-14709A	A-5318
RT-14709B	RTO-15618
RTX-14709A	RTLO-14618
RTX-14709B	RTLO-16618

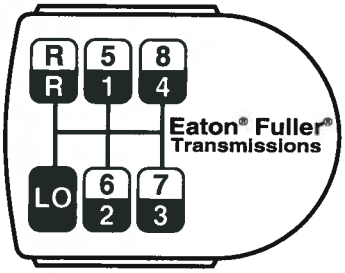

20883

A-5040	A-5041
A-5010	**A-4900**
RTO-11609A	RTOO-11613
RTO-11609B	RTOO-14613
RTO-11709A	
RTO-11709B	
RTO-12609A	
RTO-12609B	
RTO-12709A	
RTO-12709B	
RTO-14609A	
RTO-14609B	
RTO-14709A	
RTO-14709B	

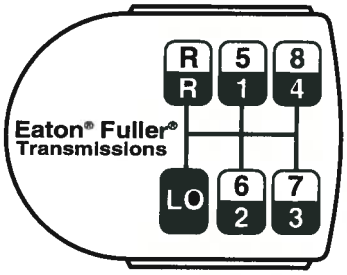

21700

A-5310	**A-5313**
RTO-11609A	RTOO-11613
RTO-11609B	RTOO-14613
RTO-11709A	
RTO-11709B	
RTO-12609A	
RTO-12609B	
RTO-12709A	
RTO-12709B	
RTO-14609A	
RTO-14609B	
RTO-14709A	
RTO-14709B	

VALVES WITH GENERIC MEDALLION (BLACK)

VALVES WITH SHIFT DIAGRAM MEDALLION (BLUE)

For Valves Located to Right of Driver

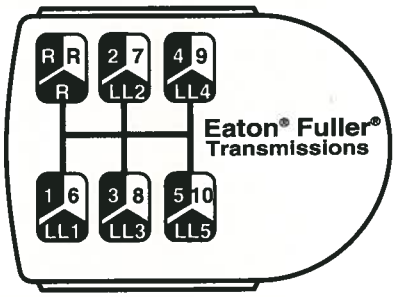

21818

A-5015
RT-6613
A-5284 Dia. Medallion

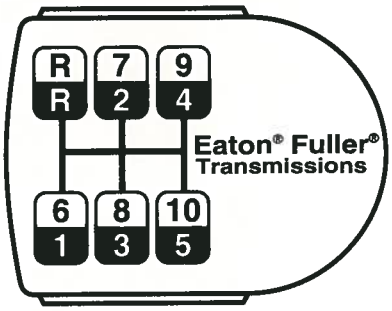

20884

A-5043
A-5010
RT/RTX-11610
RT/RTX-12610
RT/RTX-14610

A-5044
A-5015
RT/RTX-11615
RT/RTX-11715
RT/RTX-14615
RT/RTX-14715
RT/RTX-15615
RT/RTX-15715
A-5043
RT-6610
RT/RTX-11710 B/C
RT/RTX-12710 B/C
RT/RTX-13710 B/C
RT/RTX-14710 B/C
RTX-15710 B/C
RTX-16710 B/C

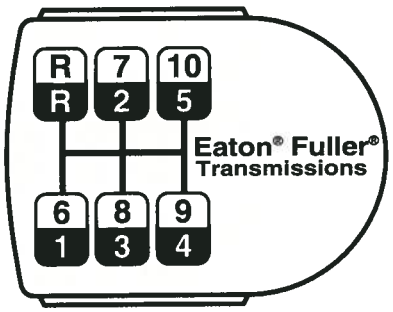

20885

A-5045
A-5010
RTO-6610
RTO-11610
RTO-12610
RTO-14610

A-5046
A-5015
RTO-11615
RTO-11715
RTO-14615
RTO-14715
RTO-15615
RTO-15715

For Valves Located to Left of Driver

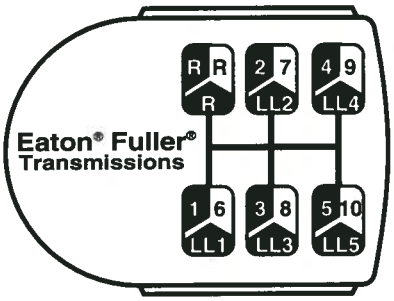

21819

A-5315
RT-6613

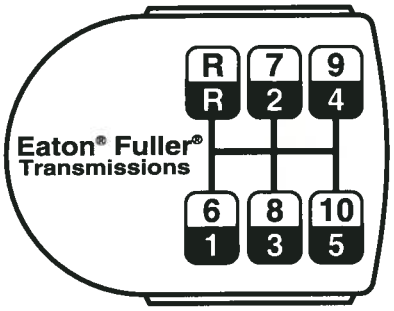

21701

A-5310
RT/RTX-11610
RT/RTX-12610
RT/RTX-14610

A-5315
RT/RTX-11615
RT/RTX-11715
RT/RTX-14615
RT/RTX-14715
RT/RTX-15615
RT/RTX-15715

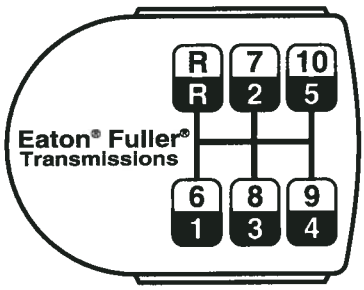

21702

A-5310
RTO-6610
RTO-11610
RTO-12610
RTO-14610

A-5315
RTO-11615
RTO-11715
RTO-14615
RTO-14715
RTO-15615
RTO-15715

VALVES WITH GENERIC MEDALLION (BLACK)

VALVES WITH SHIFT DIAGRAM MEDALLION (BLUE)

Roadranger Valve Shift Diagram Medallion

For Valves Located to Right of Driver

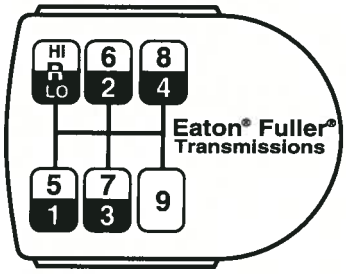

21519
A-5185
A-5010
RTX-11609P/R
RTX-12609P/R
RTX-14609P/R
RTX-13609P/R

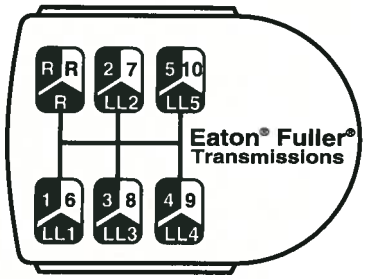

21820
A-5285 Dia. Medallion
A-5015
RTO-6613

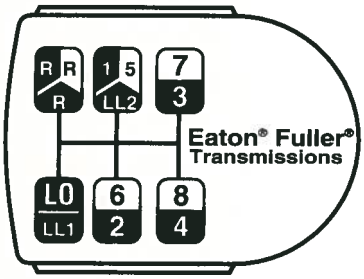

4302762
A-6482
A-5015
RTO-11709MLL
RTO-14709MLL

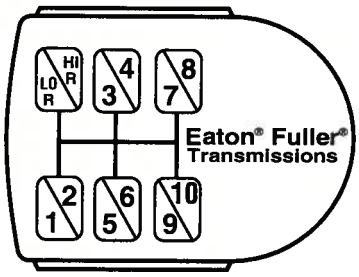

4301681
A-5510
RTLO-11610B
RTLO-12610B
RTLO-13610B
RTLO-14610A/B
RTLO-15610B
RTLO-16610B

VALVES WITH GENERIC MEDALLION (BLACK)

For Valves Located to Left of Driver

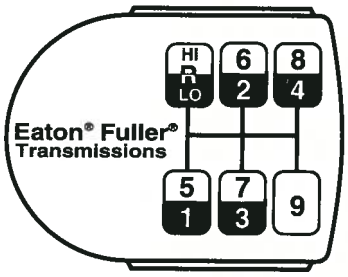

21704
A-5310
RTX-11609P/R
RTX-12609P/R
RTX-14609P/R

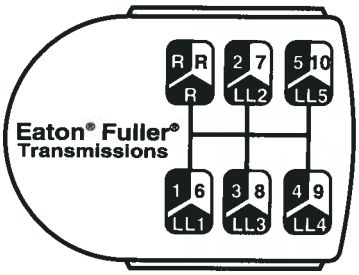

21821
A-5315
RTO-6613

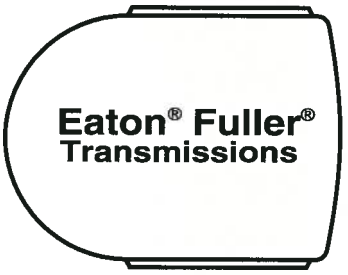

21691
A-5315
RTO-11709MLL
RTO-14709MLL

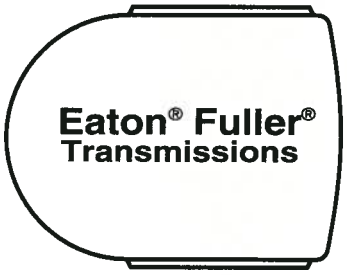

21691
A-6333
RTLO-11610B
RTLO-12610B
RTLO-13610B
RTLO-14610A/B
RTLO-15610B
RTLO-16610B

VALVES WITH SHIFT DIAGRAM MEDALLION (BLUE)

Old Style 13 Speed Selector Valve Repair Kits

Selector Valve Assemblies

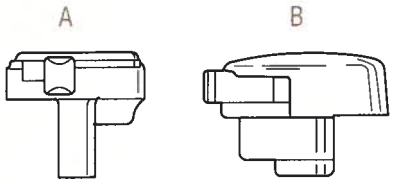

A K-1443 Repair Kit services the following valves: A-3809, A-3810, A-3811, A-3812, A-3813, A-4065, A-4088, A-4089, A-4115, A-4116, A-4117, A-4118, A-4119, A-4120, A-4121, A-4162, A-4163, A-4164, A-4165, A-4166, A-4310, A-4315 and A-4320

B K-1550 Repair Kit services the following valves: A-4354, A-4376, A-4384, A-4392, A-4418, A-4435, A-4436, A-4487, A-4488, A-4489, A-4490, A-4491, A-4492, A-4493 and A-4494

Air Valve Repair Kits

Model Application	Part Number	Description
All Models	K-1566	Repair Kit Range Valve (A-3546)
	K-1699	Repair Kit Slave Valve (A-3547, A-4687, A-4688)
All Models	K-1935	Repair Kit Slave Valve (A-5000)
	K-1613	Replacement Kit Cap (A-3547, A-4687, A-4688)
	S-1516	Replacement Kit Cap (A-5000)

Air Filter Repair Kits

Model Application	Part Number	Description
New Generation	K-1698	(A-4740, A-5161, A-5454)
Old Generation	K-1486	(A-4041)

Air Filter Replacement Kit

Model Application	Part Number	Description
11700, 14700, 15700	K-2170	Replaces A-5161

Insert Valve

Model Application	Part Number	Description
Where Used	19974	
Super 10	4300810	
Ceemat		

Slave Actuator Parts

Refer to the chart below for proper part number of slave valve actuator parts. Proper selection depends on transmission model and type of slave used.

900 thru 15600 series

Note: 20490 plunger can be used in place of 19459. (19459 cannot be used in place of 20490) K-1969 Replaces 19460

A-4688, A-3991

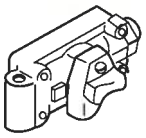

Parts used with
A-4688 & A-3991 slave valve

19470

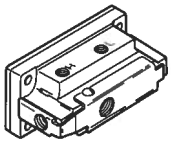

Parts used with 19470 slave valve
through late 1983

19470 **A-5000**

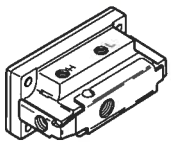

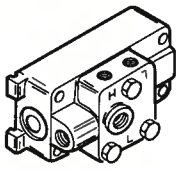

Parts used with A-5000 slave valve and
19470 slave valve beginning late 1983

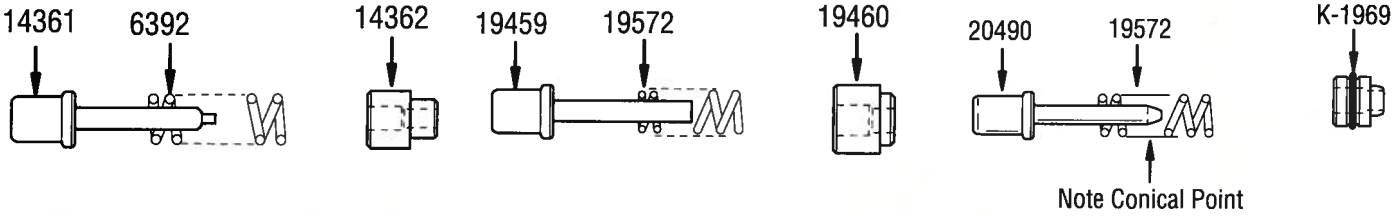

600-6600-8600 Series

Note: 20490 plunger can be used in place of 19459. (19459 cannot be used in place of 20490) K-2079 Replaces 19570

A-3547, A-4687,
A-4688, A-3991

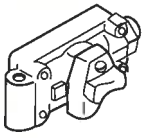

Parts ued with A-3547, A-4687, A-4688
& A-3991 slave valve

19470

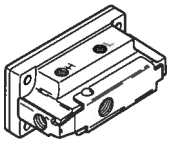

Parts used with 19470 slave valve

19470 **A-5000**

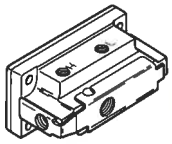

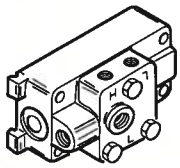

Parts used with A-5000 slave valve and
19470 slave valve beginning late 1983

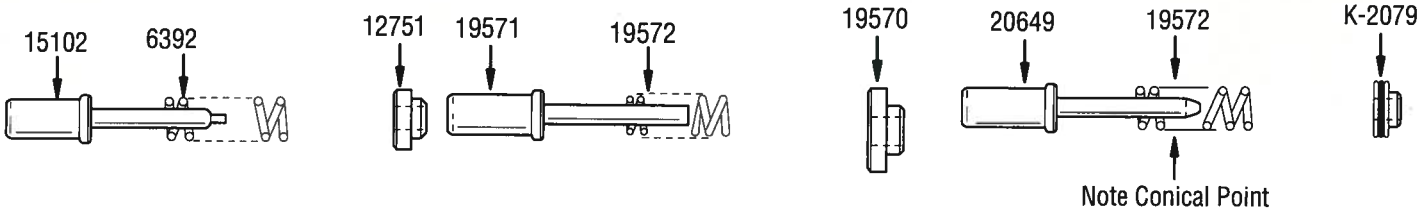

Range Valve Assembly A-3546

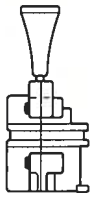

Selector Valve Assemblies

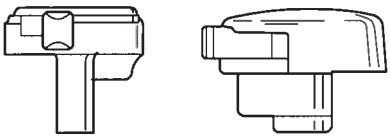

Roadranger Valves

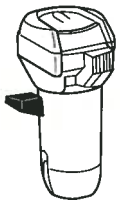

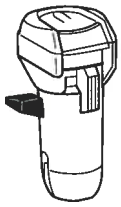

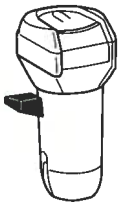

Slave Valve Assemblies

A-4688

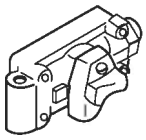

A-5000

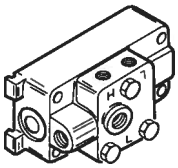

19470

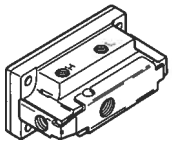

Replace these valves if defective

Regulator Valve Assembly
16743

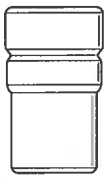

Old Generation

Reduction Valve Assembly
14651

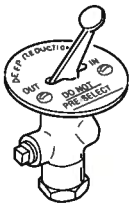

Road Speed Governor Valves
18734

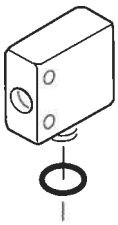

18675

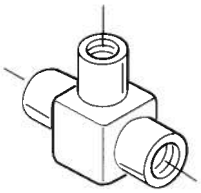

TCB Valve Assembly
16859

AT-1202 Shift Valves
2 Position 18634

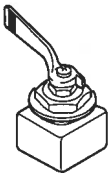

3 Position 18554

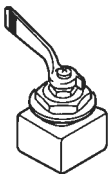

Insert Valve Assembly
19974 / 4300810

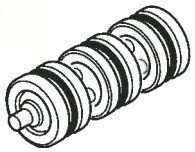

Air Filters-Regulator Valves

Regulator-Filter Assembly
A-4740

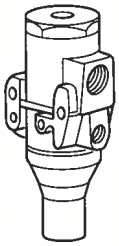

New Generation

Regulator-Filter Assembly
A-5454 (Order K-2170)

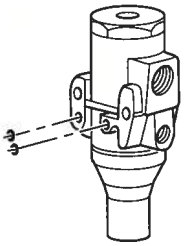

Air Filter Assembly
A-4041

Old Generation

Air Regulator Bracket

16744

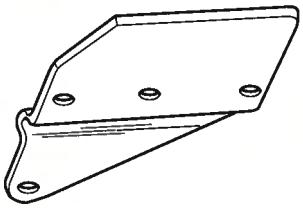

17107 w/18860 Plate

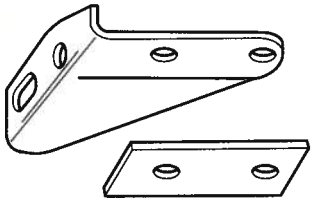

10826

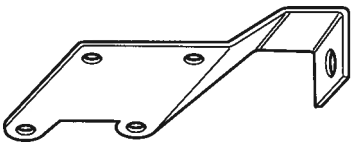

17081

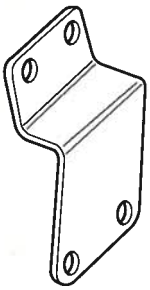

15177

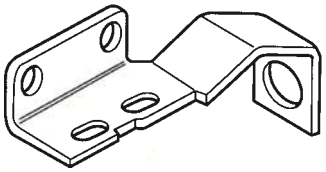

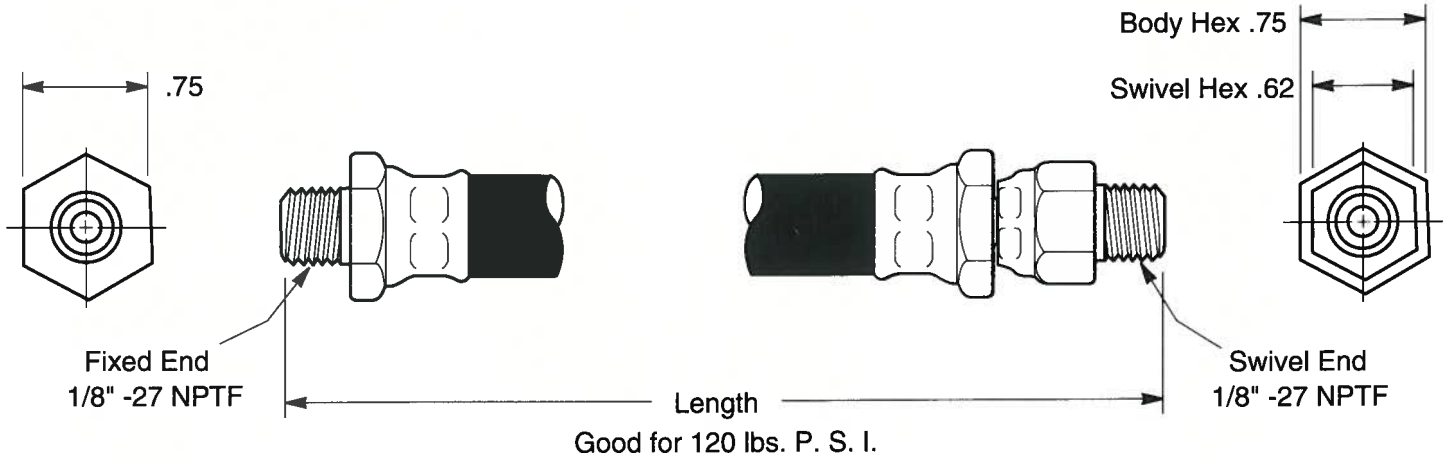

Part No.	Length (Inches)
55502	8.00
55503	10.00
55504	13.50
55505	16.00
55506	18.00
55507	20.00
55508	30.75
55509	34.00
55510	9.00
55512	6.00
55513	12.50
55514	5.00
55515	7.50
55516	22.00
55517	10.50

Part No.	Length (Inches)
55518	32.00
55519	25.00
55520	24.00
55521	23.00
55522	28.00
55523	29.00
55524	27.00
55525	17.00
55526	26.00
55527	15.00
55528	36.00
55529	40.00
55530	38.00
55531	14.50
55532	15.50
55533	17.50
55534	29.50
55539	42.00

Air Hose Clamps

11665

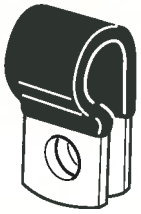

12152 (Replaced by 18769)

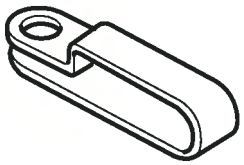

16217

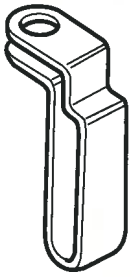

18769

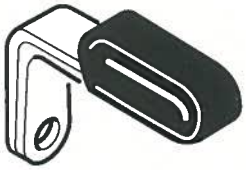

19779

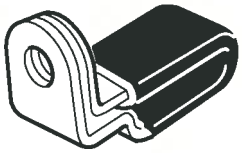

21732

21427

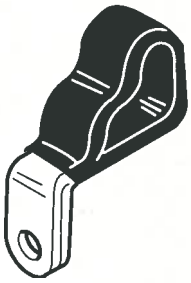

21728

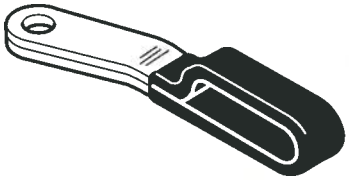

21425 21426

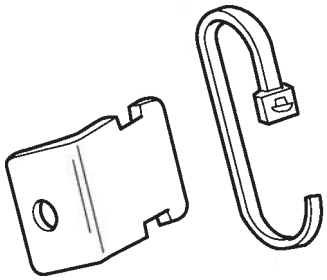

Air Tubing-1/8" Nylon

68526 50' White

82013 50' Black

Sheathing

80000 50'

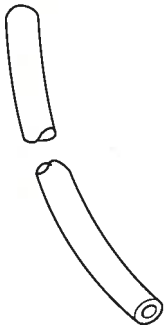

"O" Ring Clamp

13571

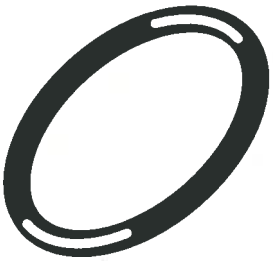

Tubing Connectors - 1/8" Nylon

Connector 84001

1/16"
N. P. T.

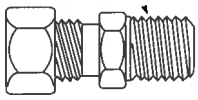

Connector 84002

1/8"
N. P. T.

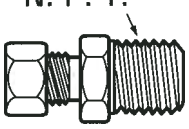

Union 84101

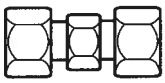

Elbow 85002

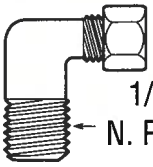

Nut 83501

Collet 83001

Tubing Connectors-5/32" Nylon Push to Connect

Connector Assembly
5/32" Tube — 1/16" NPTF
Part Number: 84005

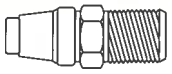

Straight Connector Assembly:
5/32" Tube — 1/8" NPTF
Part Number: 84006

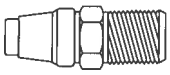

Union Assembly (optional)
5/32" Tube
Part Number: 84103

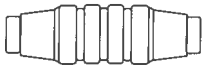

Elbow Assembly
5/32" Tube — 1/8" NPTF
Part Number: 85003

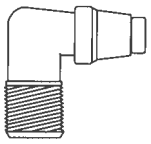

Tubing Connectors-5/32" Nylon

Connector 84003

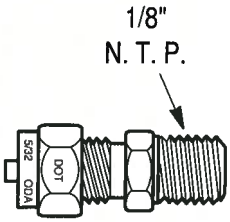

Connector 84004

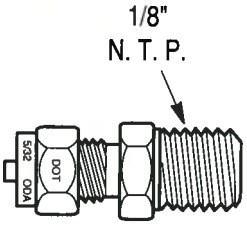

Elbow 85001

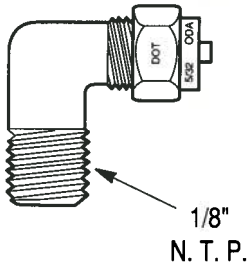

Union 84102

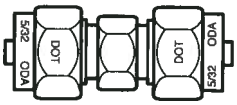

Nut 83502

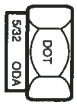

Collet 83002

Roadranger Valve Port Markings

A - Supply - Non - Regulated (From Air Filter End Cap)

B - Brake Signal

E - Exhaust (Line and Fitting Optional - Exhaust to Remote Area)

H/L - Splitter/Deep Reduction Supply (From High/Low Shift Cylinder)

P - Pilot (Signal for Range Shift)

S - Supply (Air Supply From Filter Regulator)

SP - Splitter/Deep Reduction Cylinder Pilot

Air Tubing-5/32" Nylon

75120 (Red) 50' S-Supply

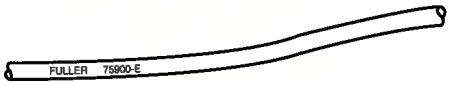

75320 (Black) 50' P-Pilot

75520 (Green)
50' H/L-Splitter or Deep Reduction Supply

5547002 (Orange) 50' A-Supply-Non-Regulated

75720 (Blue) 50' SP-Splitter Pilot

75820 (Yellow) 50'
B-Brake Signal

75920 (Brown) 50' E-Exhaust

Sheathing

80120 50'

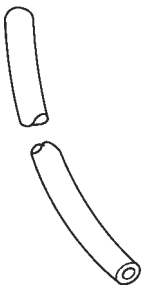

"O" Ring Clamp

13571

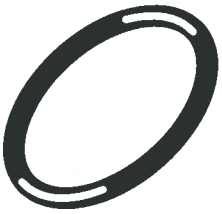

Tubing Harness

52601 50'

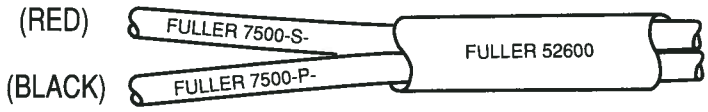

52701 50'

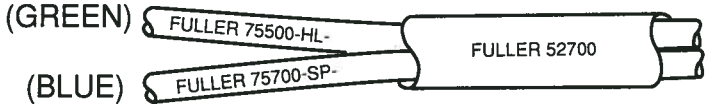

52801 50'

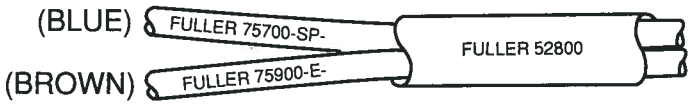

52901 50'

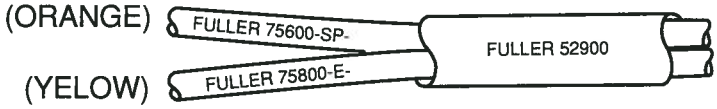

74701 50'

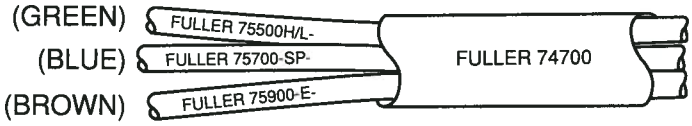

74601 50'

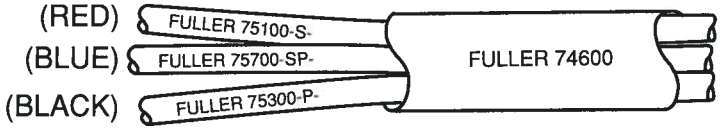

NO 4 LINE HARNESS

1/8" Pipe

Part #	Description	
3230	1/8" x 1"	Nipple
3231	1/8" x 90°	Elbow
3232	1/8" x 5-1/2"	Pipe
3233	1/8"	Coupling
6085	1/8" x 7"	Pipe
10796	1/8" x 1-1/2"	Nipple
12769	1/8" x 3/4"	Nipple
12845	1/8" x 90°	Street Ell - Brass
12880	1/8" x 45°	Street Ell - Brass
12881	1/8"	Tee - Brass
13135	1/8"	Cross
14815	1/8" x 90°	Male Ell Brass
21086	1/8"	Branch Tee

1/4" Pipe

Part #	Description	
11678	1/4" x 90°	Street Ell
13348	1/4"	Coupling
14769	1/4" x 1-1/8"	Nipple
16741	1/4" close	Nipple
16865	1/4" x 3/8" x 90°	Street Ell

3/8" Pipe

Part #	Description	
11995	3/8" x 90°	Street Ell
15423	3/8" x 1-1/2"	Nipple
15425	3/8" x 90°	Ell Brass

1/2" Pipe

Part #	Description	
17007	1/2" x 90°	Street Ell

3/4" Pipe

Part #	Description	
15760	3/4"	Street Ell
17008	3/4" x 1/2" x 90°	Ell

Reducer Bushings

Part #	Description
9332	1/4" x 1/8"
11970	3/8" x 1/4"
14098	1/2" x 3/8"
15703	3/4" x 1/4"
15724	3/4" x 3/8"

Fitting - Grease 1/8" PTF

4759

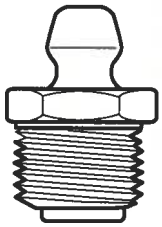

4761

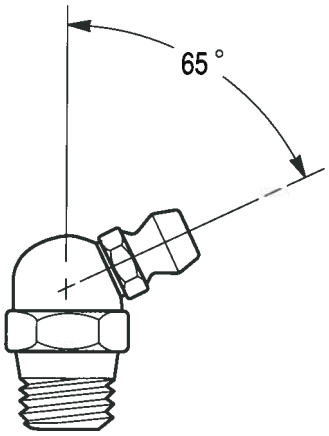

4872

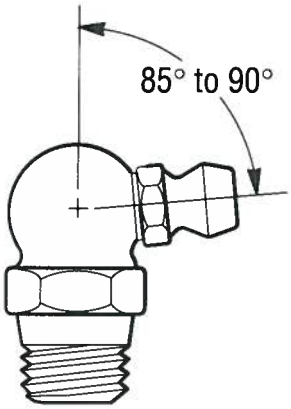

Brass Pipe Fittings

Part #	Description
13819	1/4" Pipe to 1/4" Tube

Miscellaneous "T" and Crosses

Part #	Description
12767	1/8" x 1/4" x 1/8" Tee
17006	3/4" Cross

For use with Engines Having Dual Speed Governors

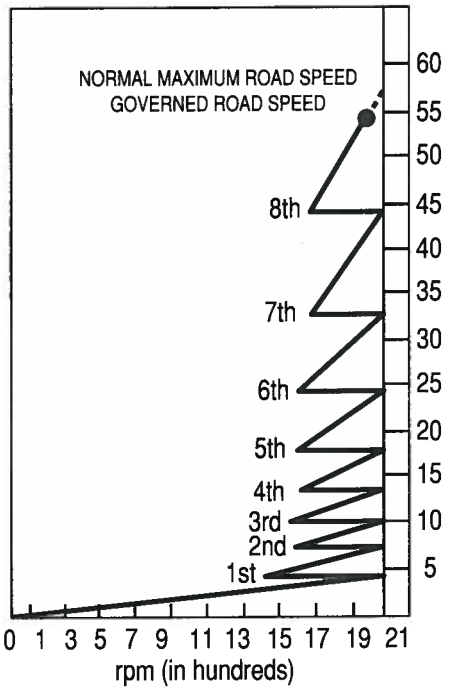

Engine rpm limited to 1950 rpm in top gear, vehicle is cruising at 55 mph (RT-11609 road speed chart)

Engine rpm limited to 1950 rpm in top gear, vehicle is crusing at 55 mph. (RT-11609 road speed chart)

The purpose of the Signal System is to provide full engine rpm in all gears except top gear. Top gear rpm is reduced to a predetermined setting. This reduces maximum engine speed and thus helps improve fuel economy, while making the full engine rpm range available in lower gears for maximum performance. The system operates only with diesel engines especially equipped with a transmission-signaled fuel pump that has two governor settings.

The Signal System shown above is typical of an installation on a Eaton Fuller® Roadranger® transmission.

The transmission air system is modified to provide the required signal to the engine fuel pump. The signal is actuated by the shift bar in the shift bar housing when the transmission is shifted into top gear.

This specified option is available on the following transmission series.

RT-6610	RT-14608	RT-12609	RT-11715
RT-8608L	RTO-11608LL	RT-14609	RT-14615
RT-8609	RTO-11708LL	RT-11610	RT-14715
RTO-11607L & LL	RTO-14608LL	RT-12610	RT-15615
RTO-11707LL	RTO-14708LL	RT-14610	RT-15715
RT-11608	RT-11609	RT-11615	

It is also available on non-Roadranger T-11605, T-8607, T-11607, and T-14607 series transmissions. The system is not applicable to the RT-6613, RT-11613, RT-14613 or RT-15613 series transmissions.

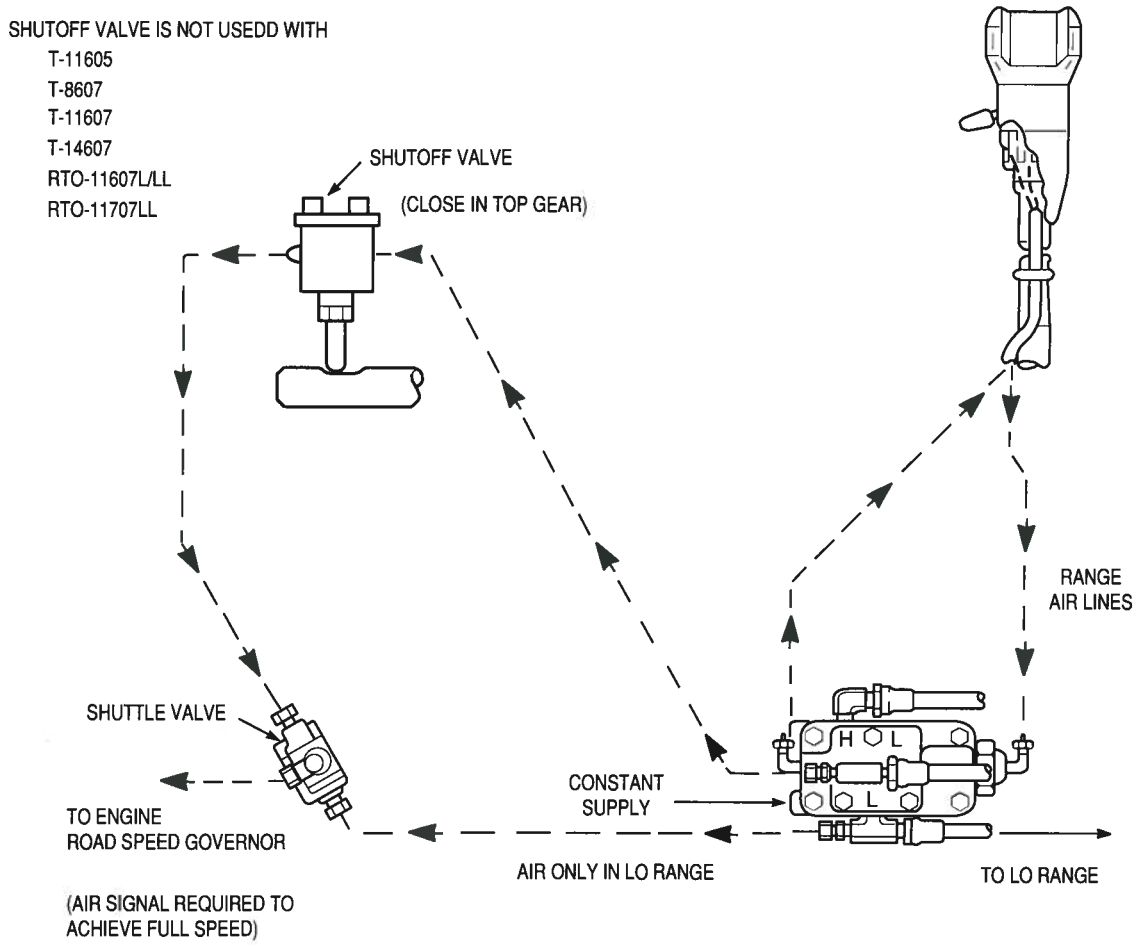

Model Application	Part Number	Description
8-8L-9-10-15 Speed	K-1901	RT
	K-1896	RTF
8LL-9-10-15 Speed	K-1908	RTO
	K-1898	RTOF
7L	K-2105	RTOF
8LL-9-10-15 Speed	K-2202	RTX
	K-2203	RTXF

The ratio control modified the air system of the RTO-11613, 11813, 14613, 14813, 15613, 15813 13-speed transmission. It converts a 13-speed transmission to a 10-speed transmission with a short-stepped overdrive ratio. It provides gear ratios to match low rpm economy and conventional engines from on/on-off truck startup to highway cruising.

The high range 5th, 6th and 7th speed overdrive splitter gear ratios of the 13-speed transmission are locked out. Overdrive in 8th is retained. The gear splitter is used only once between 8th and 8th overdrive providing a short 15% ratio split.

Ratios with and without the ratio control:

Standard			With Ratio Control	
8th OD	.87		.87	
		15%		15%
8th DIR	1.00		1.00	
		17%		
7th OD	1.17			34%
		15%		
7th DIR	1.34		1.34	
		19%		
6th OD	1.60			37%
		14%		
6th DIR	1.83		1.83	
		17%		34%
5th OD	2.15			
		14%		
5th DIR	2.46		2.46	
		37%		37%
4th	3.38		3.38	
		34%		34%
3rd	4.54		4.54	
		36%		36%
2nd	6.18		6.18	
		35%		35%
1st	8.32		8.32	
		51%		51%
Low	12.56		12.56	

As a comparison of speed cruising ranges and shift points, performance charts of both units are shown below.

Without Ratio Control

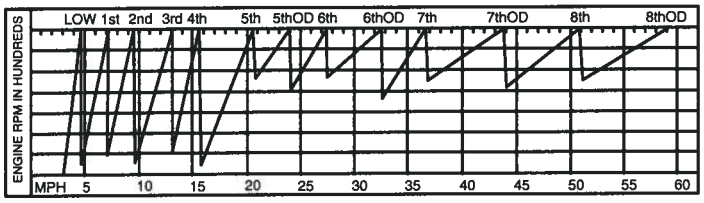

With Ratio Control

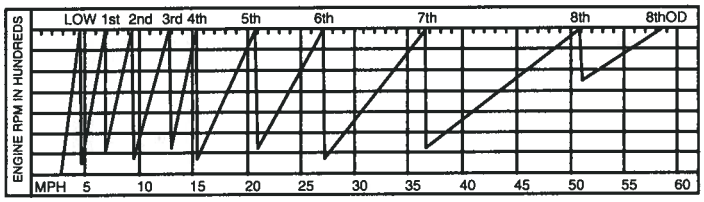

Top speed will depend on governed engine RPM, axle ratio and tire size

The changes needed to mount the ratio control on a 13-speed transmission are: a new shift bar housing, new 7th/8th yoke bar, a shutoff valve and connecting air lines and fittings.

The shutoff valve, mounted on the shift bar housing, locks out 5th, 6th and 7th overdrive by blocking air to the splitter control valve, making the splitter cylinder inoperative. A notch in the 7th/8th yoke bar opens the shutoff valve when the shift lever is in the 8th speed gear position, providing air for the shift to 8th overdrive.

To convert from a ratio control model to a 13-speed transmission requires only the changing of one air line in order to bypass the shutoff valve.

AIR SYSTEM WITH RATIO CONTROL

Typical Installation

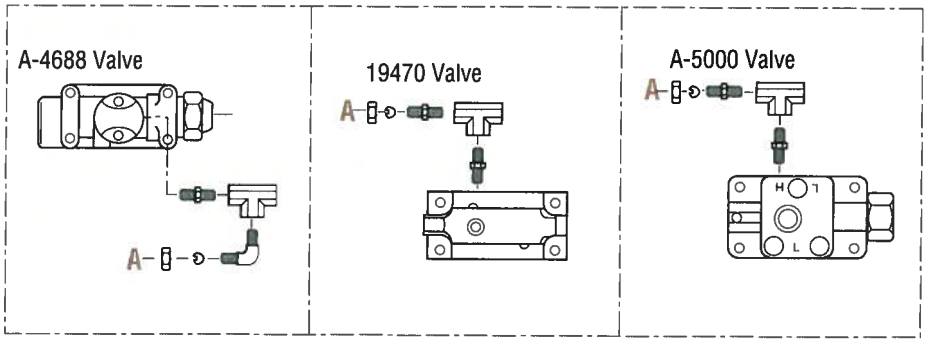

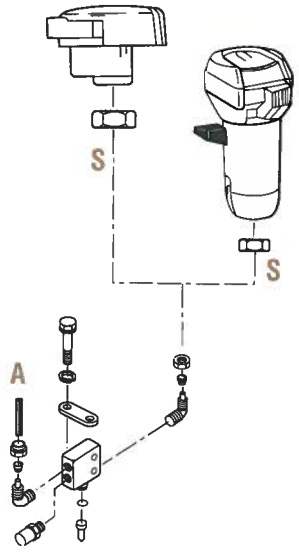

Cyl. Port (Out)

Install 7935 Breather In Unused Port
Use For Lockout Of O.D. Except In 8th
Use For Lockout Of O.D. In 8th Only

Model Application	Part Number	Description
13 Speed 11600-14600-15600	K-1903	RTO
	K-1897	RTOF
	K-1909	RTOO
	K-1899	RTOOF
	K-2200	RTOX-11613, 14613
	K-2201	RTOXF-11613, 14613

Torque Limiter

AIR SYSTEM WITH TORQUE LIMITER

Typical Installation

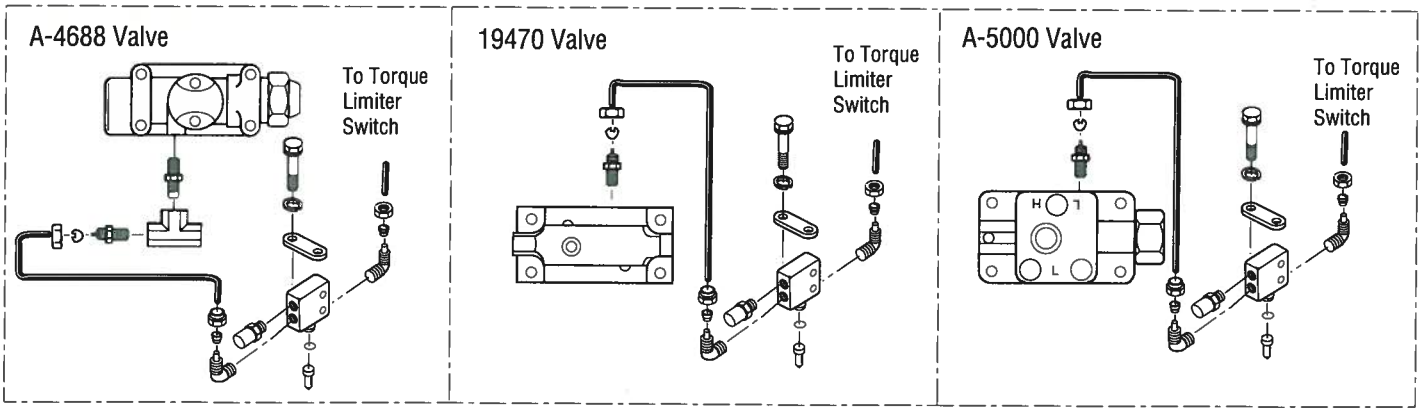

A Torque Limiter Option is available for the following transmission model series

1157DL 11607L
1157DLL 11607LL

The engine torque is limited during low gear operation through the use of a torque limiting device on the engine. This feature is activated by a valve on the shift bar housing.

Identification

To identify your clutch housing you need to know the following information.

- is it a number 1 or number 2 housing
- iron or aluminum
- standard housing or nodal mount
- if nodal mount, does it have symmetical or non-symmetrical bolt pattern
- are the upper or lower pedal shaft holes bushed
- can you find the part number stamped in the housing

with the above information the following pages will help you identify what clutch housing you have or want.

Clutch Hsg. Part No.	Order Assy. No.	Description
14788	S-1009	Push/Pull
14789	S-1237	Push/Pull
15016	A-3609	Push/Pull
15016	A-5504 (Spec.)	Push
15135	A-3569	Push
15367	A-3670	Pull
15410	A-3713	Push/Pull
15483	K-1658	Push/Pull
15483	K-1664	Push
15483	K-1665	Pull
15529	A-3711	Push/Pull
15592	A-4048	Push/Pull
15616	A-3723	Push/Pull
16022	S-1182	Push/Pull

Clutch Hsg. Part No.	Order Assy. No.	Description
17126	A-4232	Push
17130	A-4233	Pull
17159	S-1105	Push/Pull
17530	A-4325	Push/Pull
17532	A-4326	Pull
17901	A-4770	Push/Pull
17902	K-1661	Pull
17905	A-4348	Push/Pull
18000	A-4373	Pull
18130	S-1085	Push/Pull
18294	A-4455	Pull
18400	A-4456	Pull
18558	A-4480	Pull
18559	A-4479	Pull
18630	A-4495	Pull
18631	A-4496	Pull
18805	A-4564	Pull
18843	A-4577	Pull
18844	A-4578	Pull
19693	A-4751	Pull
20372	A-4949	Push
20655	A-5004	Push/Pull
20982	A-5067	Push/Pull
21641	A-3700	Pull
21642	A-3722	Pull
21643	A-4342	Pull
23223	A-5531	Push
23393	A-5554	Push/Pull
4300259	A-5728	Pull
4301103	A-5992	Pull
4301204	A-6064	Push/Pull

Clutch Hsg. Part No.	Order Assy. No.	Description
20655	A-5004	Push/Pull
20655	A-5314	Pull
21646	A-5205	Push
23722	A-5630	Pull
230546	230545	Push
230549	230548	Push
23726	A-5634	Pull
3316240	3316239	Push
3316242	3316241	Push
23720	A-5628	Pull
23721	A-5629	Pull
23723	A-5631	Pull

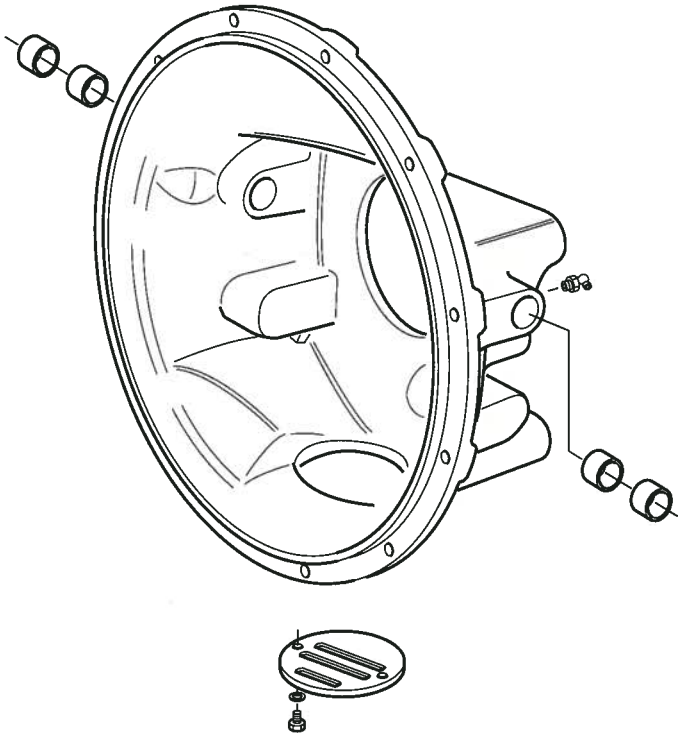

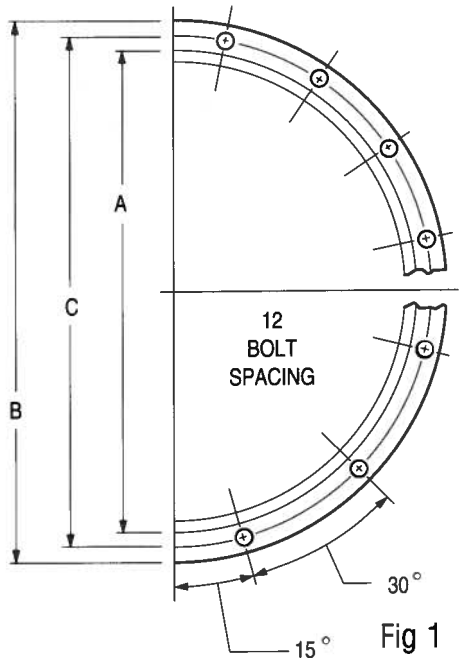

Fig 1

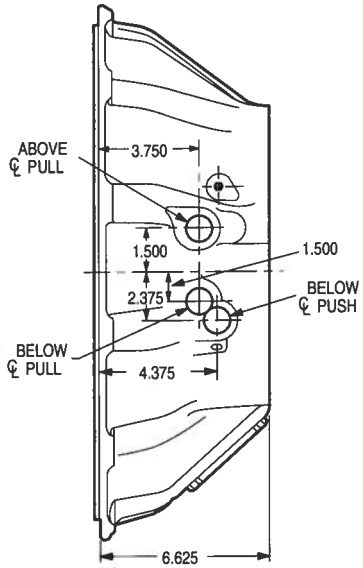

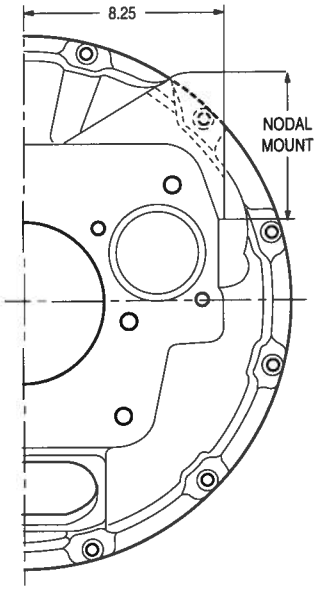

Fig 2

SAE Size No.	A Pilot Diameter	B Outside Diameter	C Bolt Circle	Capscrew Qty	Capscrew Size
1*	20-1/8	21-3/4	20-7/8	12	7/16-14
2*	17-5/8	19-1/4	18-3/8	12	3/8-16

*SAE #1 & SAE #2 denotes clutch housing size. SEE FIG. 1

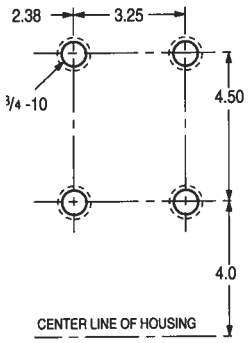

#1 HOUSING ONLY FIG. 3

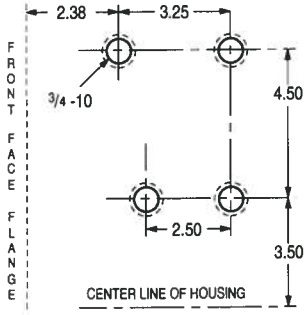

#1 HOUSING ONLY FIG. 4

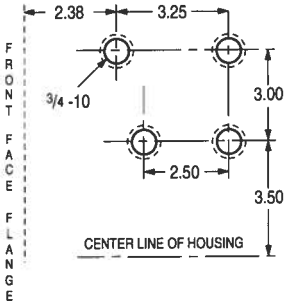

#2 HOUSING ONLY FIG.5

Nodal Mount - Denotes side mounting pads used for support of transmission and engine. SEE FIG. 2.
Symmetrical - Denotes symmetrical bolt mounting pattern of nodal mount. SEE FIG. 3.
Non-symmetrical - Denotes non-symmetrical bolt mounting pattern of nodal mount. SEE FIG. 4 & 5.

Clutch Housing Chart

Model Series	Standard Housing							
	SAE No. 1				SAE No. 2			
	Aluminum		Iron		Aluminum		Iron	
	Type	Part No.	Type	Part No.	Type	Part No.	Type	Part No.
FS-6106					*	A-5004		
					Weight 17 Lbs.			

Model Series	Standard Housing							
	SAE No. 1				SAE No. 2			
	Aluminum		Iron		Aluminum		Iron	
	Type	Part No.	Type	Part No.	Type	Part No.	Type	Part No.
900 1157	*	K-1658	*	S-1009	*	K-1660	*	S-1237
	Weight 23 Lbs.		Weight 76 Lbs.		Weight 21 Lbs.		Weight 68 Lbs.	
	Nodal Mount #1						Nodal Mount #2	
					Non-Symmetrical		Non-Symmetrical	
	Aluminum		Iron		Iron		Iron	
	Type	Part No.	Type	Part No.	Type	Part No.	Type	Part No.
	○	A-4455	≠	A-4325	□	A-4080	○	A-3964
	△	A-4495			△	A-3670	△	A-4750
					≠	A-4049	□	A-3569
					○	A-3996		
	Weight 36 Lbs.		Weight 92 Lbs.		Weight 92 Lbs.		Weight 88 Lbs.	

Symbol Code, Clutch Pedal Shaft Configuration

○ Above Centerline Pull

△ Below Centerline Pull

□ Below Centerline Push

≠ Above and Below Centerline Pull

* Above Centerline Pull and Below Centerline Push

① 8609 Transmission Not Conifgured for Push Type Clutch

Model Series	Standard Housing							
	SAE No. 1				SAE No. 2			
	Aluminum		Iron		Aluminum		Iron	
	Type	Part No.	Type	Part No.	Type	Part No.	Type	Part No.
600			*	S-1085			*	A-3711
			Weight 71 Lbs.				Weight 64 Lbs.	
	Nodal Mount #1						Nodial Mount #2	
	Symmetrical				Non-Symmetrical		Non-Symmetrical	
	Aluminum		Iron		Aluminum		Iron	
	Type	Part No.	Type	Part No.	Type	Part No.	Type	Part No.
			≠	A-5067			*	A-3609
							△	A-4577
	Weight 82 Lbs.							

Model Series	Standard Housing							
	SAE No. 1				SAE No. 2			
	Aluminum		Iron		Aluminum		Iron	
	Type	Part No.	Type	Part No.	Type	Part No.	Type	Part No.
6600 and 8609①			○	A-4386				A-3711
			□	A-4385			□	A-3709
				A-4387			○	A-3710
			Weight 71 Lbs.				Weight 64 Lbs.	
	Nodal Mount #1						Nodal Mount #2	
	Symmetrical				Non-Symmetrical		Non-Symmetrical	
	Aluminum		Iron		Aluminum		Iron	
	Type	Part No.	Type	Part No.	Type	Part No.	Type	Part No.
			≠	A-5067			○	A-3608
							□	A-3574
								A-3609
							△	A-4577
							Weight 82 Lbs.	

Symbol Code, Clutch Pedal Shaft Configuration

○ Above Centerline Pull
△ Below Centerline Pull
□ Below Centerline Push
≠ Above and Below Centerline Pull
* Above Centerline Pull and Below Centerline Push
① 8600 Transmission Not Configured for Push Type Clutch

Clutch Housing Chart

Model Series	Standard Housing							
	SAE No. 1				SAE No. 2			
8607A-B	Aluminum ①		Iron		Aluminum ①		Iron	
8608L	Type	Part No.	Type	Part No.	Type	Part No.	Type	Part No.
1110	○	A-4342	○	A-3700	○	A-4344	○	A-3722
11500	□	A-4769	□	A-3674	□	A-4771	□	A-3721
11600		A-4770		A-3713		A-4772		A-3723
11700	Weight 23 Lbs.		Weight 76 Lbs.		Weight 21 Lbs.		Weight 68 Lbs.	
11800	Nodal Mount #1						Nodal Mount #2	
12500	Symmetrical				Non-Symmetrical		Non-Symmetrical	
12600	Aluminum		Iron		Iron		Iron	
12700	Type	Part No.	Type	Part No.	Type	Part No.	Type	Part No.
14600	○	A-4456	△	A-4916	□	A-4373	○	A-4233
14700	△	A-4550	≠	A-4348	△	A-3950	△	A-4751
14800					≠	A-4051	□	A-4232
15600	Weight 36 Lbs.		Weight 92 Lbs.		Weight 92 Lbs.		Weight 88 Lbs.	
15700								
15800								

Symbol Code, Clutch Pedal Shaft Configuration

○ Above Centerline Pull
△ Below Centerline Pull
□ Below Centerline Push
≠ Above and Below Centerline Pull
* Above Centerline Pull and Below Centerline Push
① 8600 Transmission Not Configured for Push Type Clutch

FIG. 1

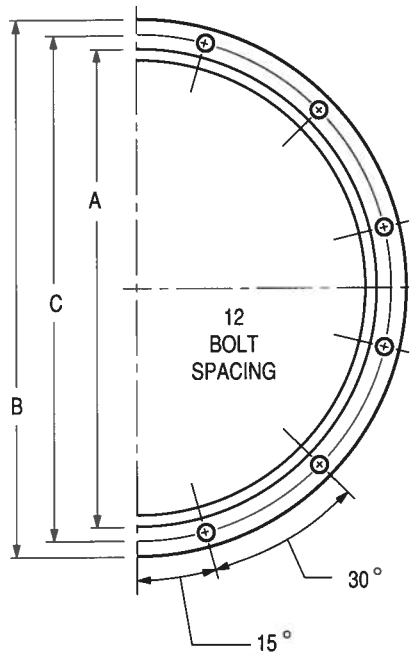

FIG. 2

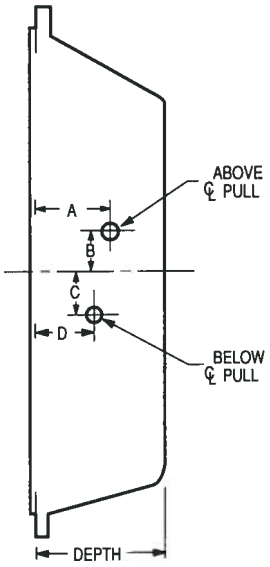

SAE Size No.	A Pilot Diameter	B Outside Diameter	C Bolt Circle	Capscrew Qty	Capscrew Size
1*	20-1/8	21-3/4	20-7/8	12	7/16-14
2*	17-5/8	19-1/4	18-3/8	12	3/8-16

*SAE #1 & SAE #2 denotes clutch housing size. SEE FIG. 1

UPPER NODAL MOUNT

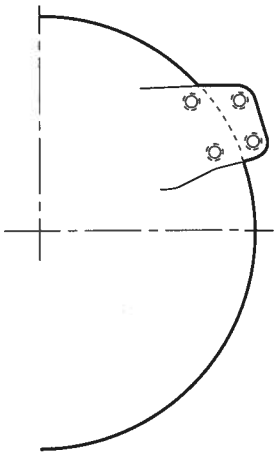

LOWER NODAL MOUNT

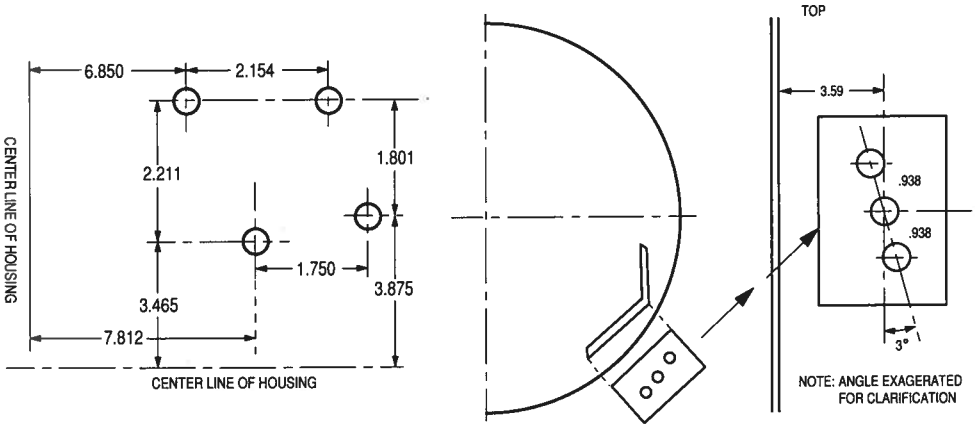

Nodal Mount - Denotes mounting pads used for support of transmission and engine.

Clutch Housing Chart

FS-5106 - FS-6105

Assembly	Housing	SAE No.	Depth	D/G Cover Pilot Dia.	Pedal Shaft Type	Push or Pull	Material
230548	230549	2	6 1/2	7.22	B	Push	Iron
A-5628	23720	2	6	6.25	D	Push	Iron
A-5631	23723	2	4 3/4	7.25	A	Pull	Iron
A-5634	23726	2	6 5/8	6.25	A	Pull	Alum.
A-5205	21646	2	6 5/8	6.25	E	Push	Alum.
—	3316241	2	4 3/4	7.25	Fork	Push	Alum.

Note: Assemblies listed are complete with Bushings and Grease Fittings.

	Dimensions for Mounting Pedal Shaft See Figure 2				
	Above Pull		Below Push		
Clutch Housing	A	B	C	D	Nodal Mount
230548	–	–	2.500	3.590	Lower
A-5628	–	–	2.500	3.625	Upper
A-5631	3.750	1.500	–	–	–
A-5634	3.750	1.500	–	–	–
A-5205	–	–	3.000	2.563	–

Push Type

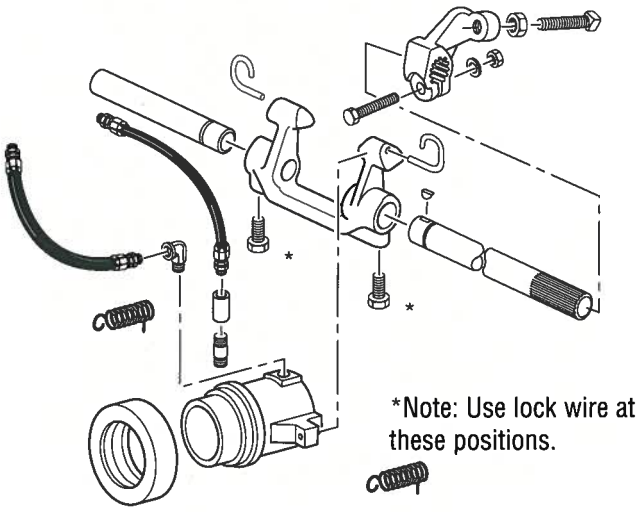

Pull Type

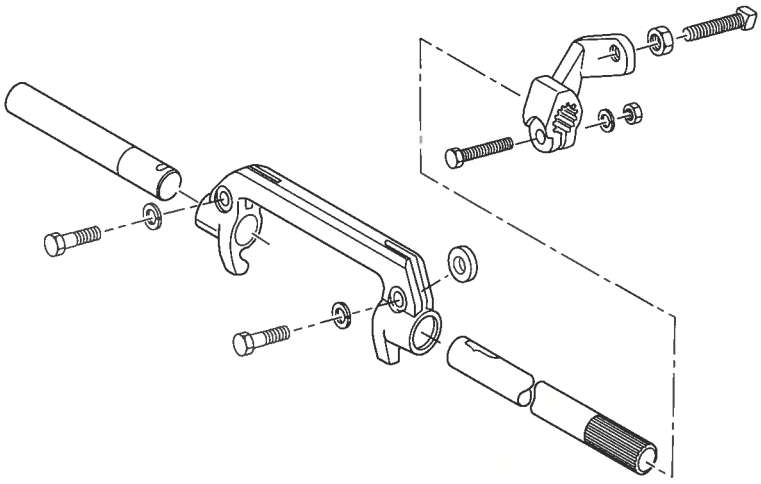

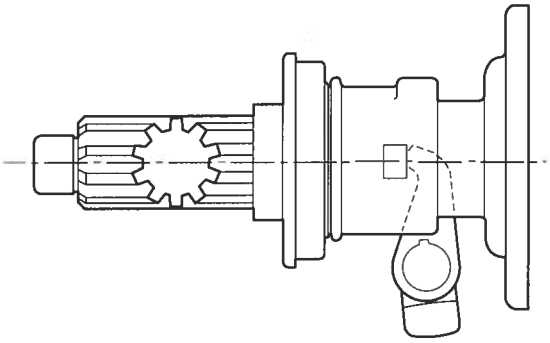

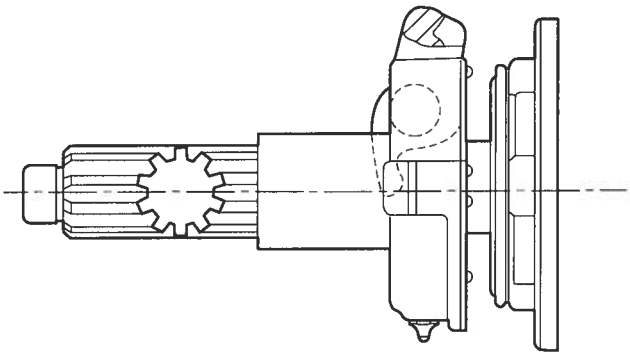

Clutch Installation Kit

Use the Eaton Fuller Clutch Installation Kit K-2468 with your replacement clutch.

Kit covers all pull type 2" input shaft applications for 11600, 1200, 1300, 1400, 1500 and 1600 series transmissions.

The kit includes:

- latest designed front bearing cover for smoother clutch brake surface with oil return grooves on the input shaft for maximum lube retention
- long life flywheel pilot bearing with high temperature grease and Viton® seals to resist hotter engine temperatures
- cross shaft bushing replacement for improved throw-out bearing life, smoother shifting, and easier operation.

K-2468 Kit Contents

Part Number	Description	Quantity
8677	Clutch release shaft bushing	3
12815	Clutch release shaft bushing	4
14311	Front bearing cover gasket	1
16980	Input shaft snap ring	1
19870	Shift lever housing gasket	1
20550	Front bearing cover	1
20822	Clutch housing gasket	1
81504	Input shaft bearing	1
5566505	Pilot bearing	1
S-1659	Input shaft assembly	1

Oil Dipstick Assembly K-1927

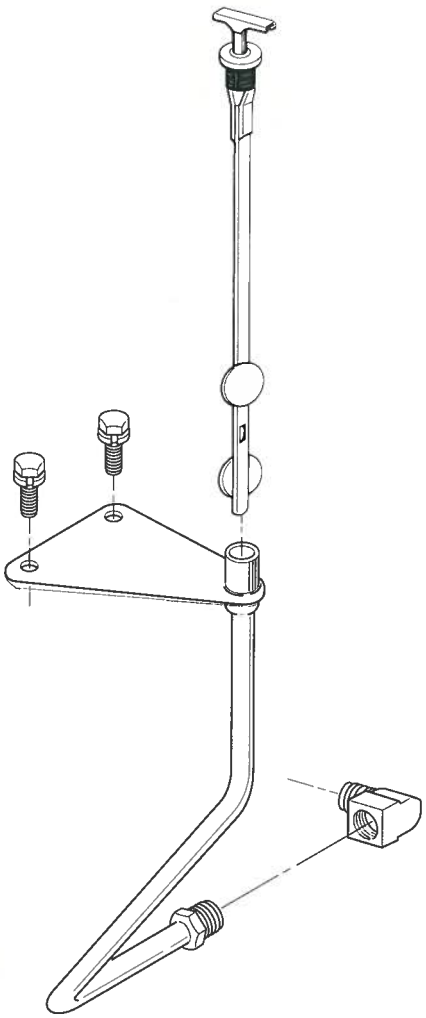

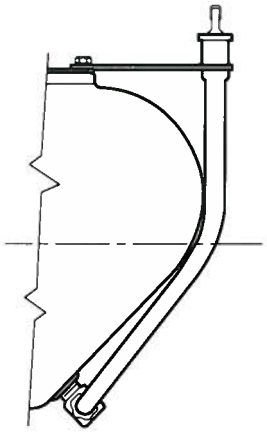

Side View

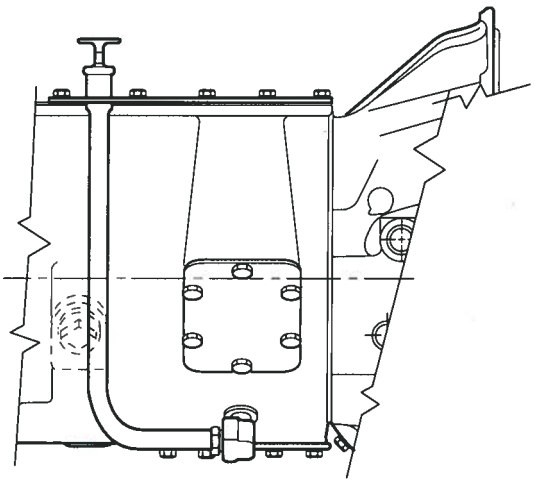

Rear View **Right**

Oil Dipstick Kit
RT-900, 1110, 11509, 8608L, 11600, 11700, 11800, 12500, 12600, 12700, 12800, 14600, 14700, 14800, 15600, 15700, 15800, 16600, 16700, 18700

Model Application	Part Number
6-7-8-8L-9-10-11-13-15-18 Speed	K-1927

The Roadranger® Dipstick

- Make a transmission oil check an easy routine
- Install the Fuller oil dipstick and relax
- Kit includes all the necessary material
- Recommended for COE model trucks

Low Tower

Straight Lever	Length
17600	21.7"
17784	24"
18032	39"
17694	37.25"

Mid Tower

Stub Lever
4301168

High Tower

Straight Lever	Length
17559	30"
17883	39.6"
21256	33"
21048	36.28"

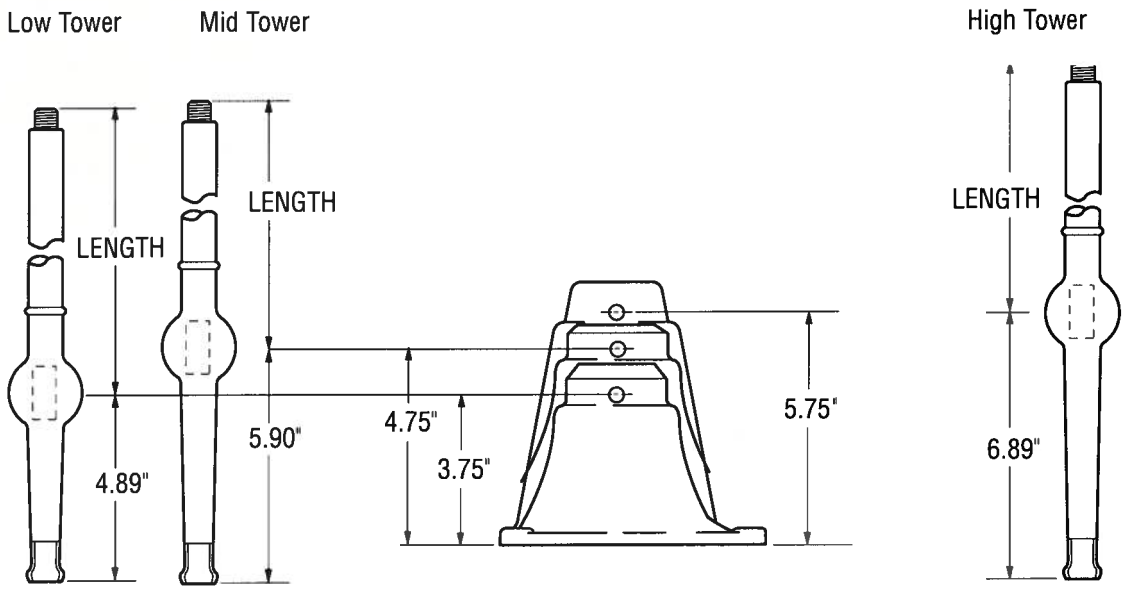

Retainer-Spring Tower Pins

2538 Retainer
2536 Spring

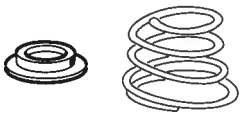

6541 (3/8")

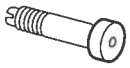

2271 (5/16")

18299

Not Used In
Current Production

4303030
Use With New Design High Tower

Tower Boots

14461

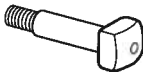

10427

14453 Clamp
14795 Boot
14454 Clamp

Lever Isolators

Stub Lever Low Tower 21235

Stub Lever Mid Tower 4301168

Isolator Upper Lever Assembly

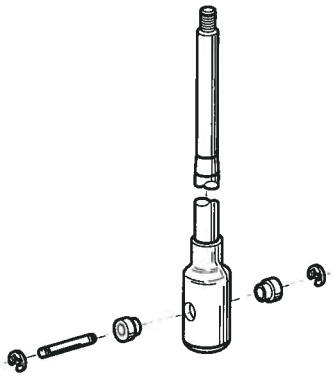

Service Isolator Assembly S-1607

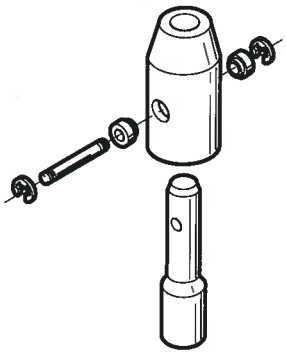

Note: For installation instructions
See Letter of instructions
Number L579

Stub Lever High Tower 21236

90° Isolator Upper Lever Assembly

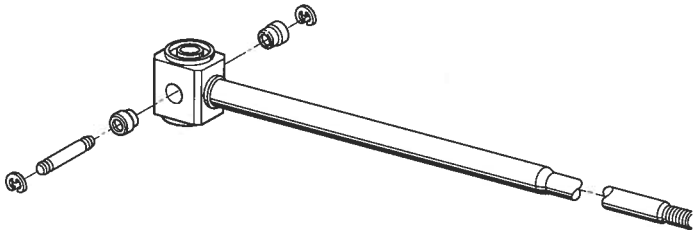

For additional lever/control information, please see Lever/Control Illustrated List Form TRIP-0930

FS-6106 (Flat Rail)

Low Tower		**High Tower**	
Straight Lever	Length	Straight Lever	Length
20876	21.0"	21267	35.62"

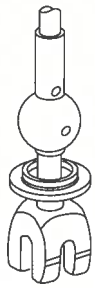

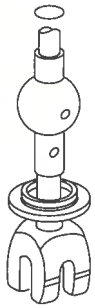

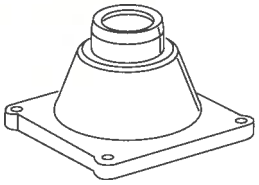

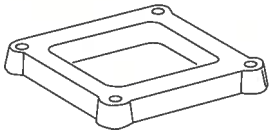

Housing
20657 Order K-1954
(Housing-"O" RIng-Gasket)

Mid-Range and FS-6106 (Round Rail)

Lever Housing Assembly Low

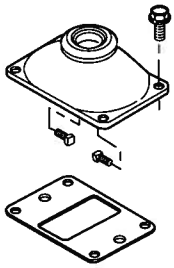

Lever Housing Assembly High

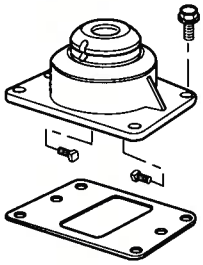

Lever

Retainer Spring

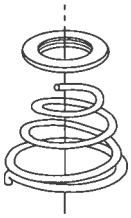

Lever Grip Boot

Straight Lever Assembly

Models	(Shift Lever Hsg.) Height 2 7/8"	3 1/8"	3 1/2"
FS-4005	N/A	S-7079	S-1578
FS-5005	N/A	N/A	S-1643
FS-6005	N/A	S-7079	S-1578
FS-6105	N/A	S-7079	S-1578
FS-5106	N/A	S-7079	S-1578
FS-6106	N/A	S-7079	S-1578
FS-6206	N/A	S-7079	S-1578
FS-7206	N/A	S-7079	S-1578
FS-8206	N/A	S-7079	S-1578
FS-4205	S-7045	S-7079	N/A
FS-5205	S-7045	S-7079	N/A
FS-6205	S-7045	S-7079	N/A
FS-6305	S-7045	S-7079	N/A
FS-5306	S-7045	S-7079	N/A
FS-6306	S-7045	S-7079	N/A

Contains: Bend to suit straight lever

Service Lever Assemblies

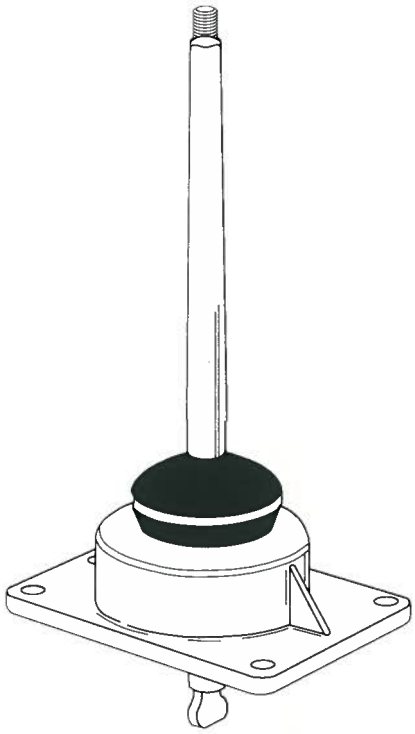

Note: Due to the use of a finger tip width which is wider than on all other transmission models, the FS5005 series transmissions require different lever assembly part numbers.

Isolator Lever Assembly

(Shift lever hsg. height)

Models	2 7/8"	3 1/8"	3 1/2"
FS-4005	N/A	S-1821	S-1697
FS-5005	N/A	N/A	S-1698
FS-6005	N/A	S-1821	S-1697
FS-6105	N/A	S-1821	S-1697
FS-5106	N/A	S-1821	S-1697
FS-6106	N/A	S-1821	S-1697
FS-6206	N/A	S-1821	S-1697
FS-7206	N/A	S-1821	S-1697
FS-8206	N/A	S-1821	S-1697
FS-4205	S-7015	S-1821	N/A
FS-5205	S-7015	S-1821	N/A
FS-6205	S-7015	S-1821	N/A
FS-6305	S-7015	S-1821	N/A
FS-5306	S-7015	S-1821	N/A
FS-6306	S-7015	S-1821	N/A

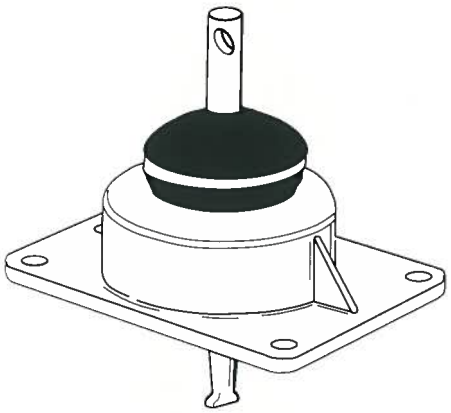

Service Lever Assembly

Models	2 7/8"	3 1/8"	3 1/2"
FS-4005	N/A	S-7063	S-7065
FS-5005	N/A	N/A	S-7066
FS-6005	N/A	S-7063	S-7065
FS-6105	N/A	S-7063	S-7065
FS-5106	N/A	S-7063	S-7065
FS-6106	N/A	S-7063	S-7065
FS-6206	N/A	S-7063	S-7065
FS-7206	N/A	S-7063	S-7065
FS-8206	N/A	S-7063	S-7065
FS-4205	S-7064	S-7063	N/A
FS-5205	S-7064	S-7063	N/A
FS-6205	S-7064	S-7063	N/A
FS-6305	S-7064	S-7063	N/A
FS-5306	S-7064	S-7063	N/A
FS-6306	S-7064	S-7063	N/A

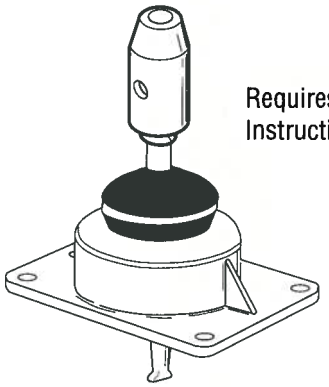

Requires existing lever to be cut and welded. Instructions included.

Service Lever Kits

Models	2 7/8"	3 1/8"	3 1/2"
FS-4005	N/A	K-7058	K-7057
FS-5005	N/A	N/A	K-7060
FS-6005	N/A	K-7058	K-7057
FS-6105	N/A	K-7058	K-7057
FS-5106	N/A	K-7058	K-7057
FS-6106	N/A	K-7058	K-7057
FS-6206	N/A	K-7058	K-7057
FS-7206	N/A	K-7058	K-7057
FS-8206	N/A	K-7058	K-7057
FS-4205	K-7059	K-7058	N/A
FS-5205	K-7059	K-7058	N/A
FS-6205	K-7059	K-7058	N/A
FS-6305	K-7059	K-7058	N/A
FS-5306	K-7059	K-7058	N/A
FS-6306	K-7059	K-7058	N/A

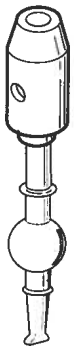

Requires existing lever to be cut and welded. Instructions included.

Service Lever

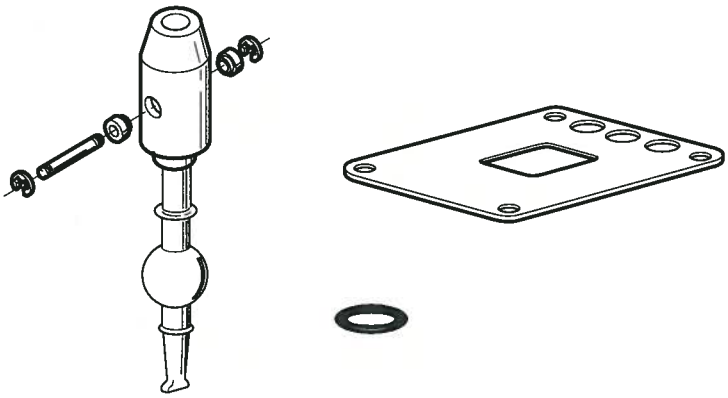

K-2428 - Low
K-2978 - Mid
K-2429 - High

Service Lever Assembly

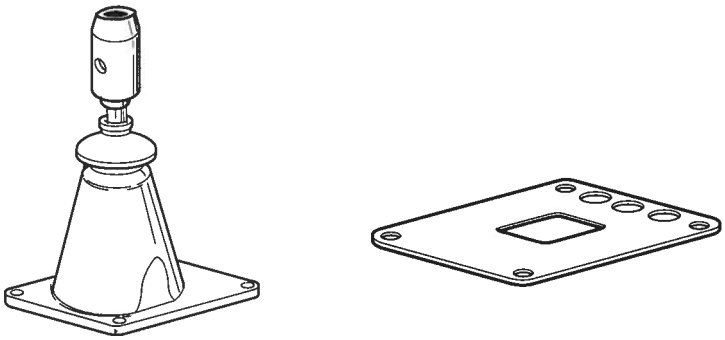

S-2129 - Low
S-2519 - Mid
S-2130 - High

Selective Mainshaft Washers

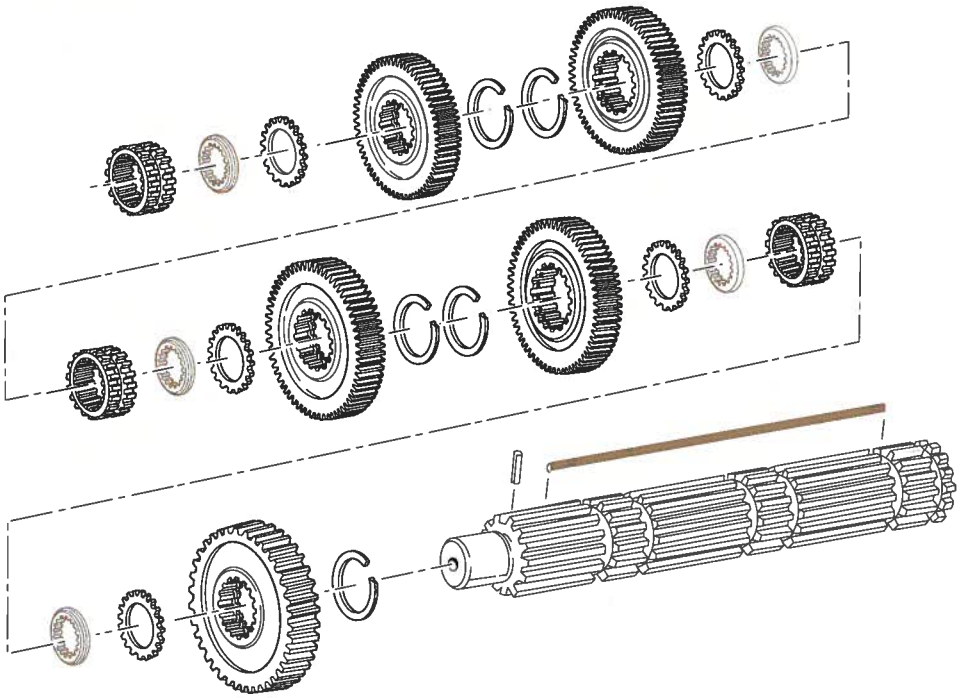

10665-1/92 For 10320 MS

Use the following chart to specify and order Washers. Washers are required to set correct limit for axial clearance or end-play between mainshaft gears. A set of five selective Washers is required for proper mainshaft assembly. Washers are available individually as listed below or in kits containing both Key and Washer sets. Key and Washer Kit contains only optimal Washer sizes.

Do not mix Key and Washer designs. Always match Washers with appropriate Key shape.

Washers for 3-Sided Key

Current Part	Size	Color Code
4300830	.224	Blue - Light Blue
4300382	.249	White - Light Blue
4300383	.254	Green - Light Blue
4300384	.259	Orange - Light Blue
4300385	.264	Purple - Light Blue
4300386	.269	Yellow - Light Blue
4300387	.274	Black - Light Blue

Washers for Hex (6-Sided) Key

Current Part	Size	Color Code
14711	.248-.250	White
14712	.253-.255	Green
14713	.258-.260	Orange
14714	.263-.265	Purple
14715	.268-.270	Yellow
14716	.273-.275	Black

Three Sided Key

Model Application	Kit Number
T-905/11605 Series	K-2360
RTO-11607L & LL	K-2361
RT-11709, 12709, 13709, 14709, 16709, 11710, 12710, 13710, 14710, 15710, 16710. RTLO-11610B, 12610B, 13610B, 14610A & B, 15610B, 16610B. RTO-11708LL, 14708LL, RTLO-14613, RT-11715, 14715, 15715. RTO-15618, RTLO-14618, 16618.	K-2366
RT-11608, 14608, 11609, 12609, 13609, 14609, 11610, 12610, 14610, RTO-8608L, 11608LL, 14608LL, RT-11613, 11813, 14613, 14813, 15613, 15813. RTLO-12713, 14713, 16713. RT-11615, 14615, 15615, RTLO-14718, 16718.	K-2439
RTO-11707LL, 13707 DLL/MLL	K-2489
RTO-11709MLL, 14709MLL	K-2858
RTLO-18718B	K-2864

Limit Washers Color Code Chart

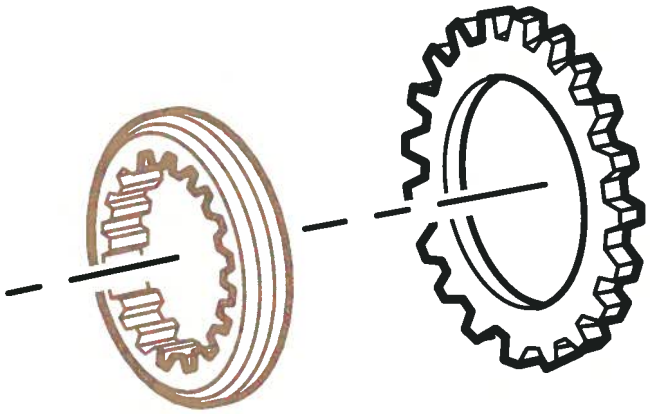

Part #	Size	Color
7389	.365-.363	Green
14274	.250-.248	White
14276	.260-.258	Orange
14277	.265-.263	Purple
14278	.270-.268	Yellow
14279	.275-.273	Black
14331	.250-.266	Orange
14636	.204-.202	Green
14637	.211-.209	White
14638	.218-.216	Yellow
14639	.255-.223	Black
14711	.250-.248	White
14712	.255-.253	Green
14713	.260-.258	Orange
14714	.265-.263	Purple
14715	.270-.268	Yellow
14716	.275-.273	Black
14867	.246-.244	Yellow
14868	.241-.239	Black
14874	.241-.239	Yellow
14875	.246-.244	Black
14950	.248-.246	Yellow
14951	.243-.241	Black
14952	.248-.246	Yellow
14953	.243-.241	Black

Part #	Size	Color
15225	.250-.248	Purple
15385	.204-.202	Yellow
15446	.261-.259	Orange
15454	.438-.435	Black
15611	.238-.326	Yellow
15612	.323-.321	Black
15932	.204-.202	Black
15976	.261-.259	Orange
16247	.498-.495	Yellow
16288	.411-.406	Yellow
16289	.411-.406	Black
16771	.260-.270	Yellow
17213	.263-.268	Red
17255	.208-.206	Green
17256	.212-.210	Orange
17257	.208-.206	Purple
17258	.212-.210	Yellow
17259	.265-.263	Purple
17260	.270-.268	Yellow
17261	.275-.273	Black
17262	.280-.278	Red
17434	.265-.263	Purple
17435	.270-.268	Yellow
17436	.275-.273	Black
17437	.280-.278	Red

Part #	Size	Color
18250	.088-.086	Purple
18251	.088-.086	Yellow
19203	.263-.267	White
19911	.248-.250	White
19912	.253-.255	Green
19913	.260-.258	Orange
19914	.265-.263	Purple
19915	.270-.268	Yellow
19916	.273-.275	Black
20011	.243-.245	White*
20617	.261-.259	Orange
20618	.265-.263	Purple
20619	.270-.268	Yellow
20620	.275-.273	Black
20621	.280-.278	Red
21664	.259-.261	Orange
21665	.263-.265	Purple
21666	.268-.270	Yellow
21667	.273-.275	Black
21668	.278-.280	Red
21350	.258-.260	Orange
4300512	.255-.253	Green

STANDARD CONTROL POSITION

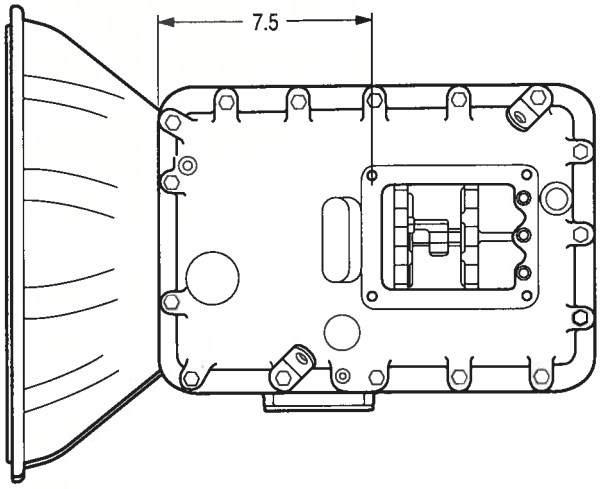

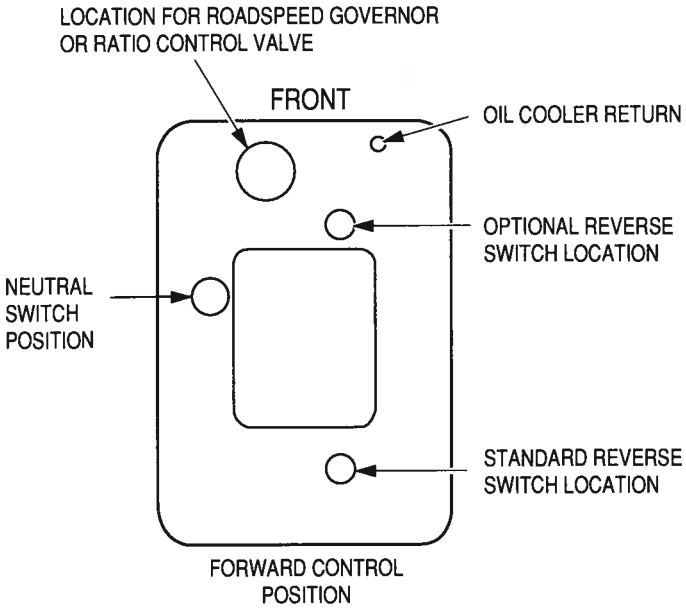

FORWARD CONTROL POSITION

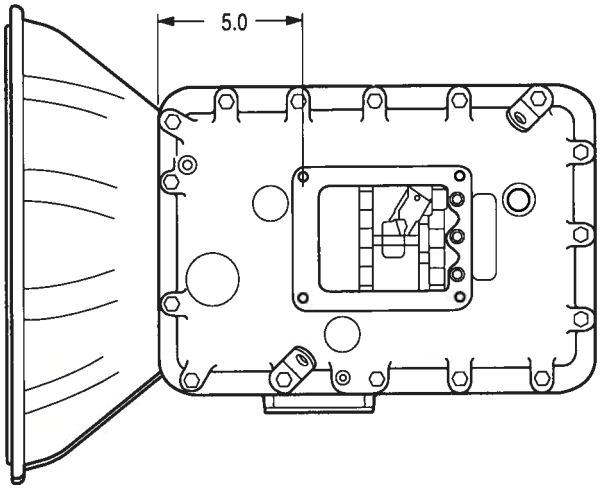

STANDARD MODEL SHIFT MECHANISM

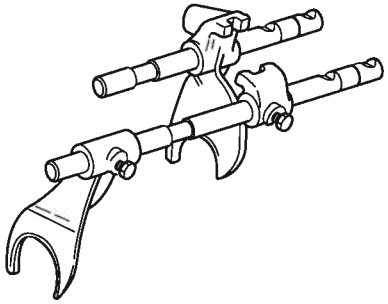

"X" MODEL SHIFT MECHANISM

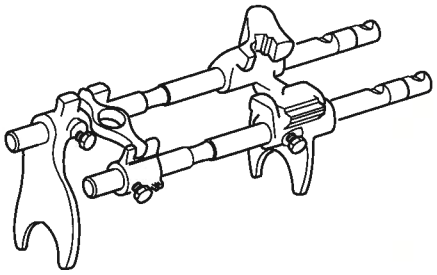

Shift Bar Housing Assemblies

Heavy-Duty Model Application	Part No.	Description
7608 LL Series	S-1807	Housing Only
	S-2404	Complete Assy.
600/6600/8600 Series 9/10/13 Speed	S-1805	Housing Only
	S-1806	Complete Assy.
900/11500/11600/11700/11800/12500/12600/12700/ 14600/14700/14800/15600/15700/15800/16600/16700 Series 8/8L/8LL/9/10/13/15/18 Speed	S-1492	(Std.) Complete Assy. (900 Series)
	S-1530	(F) Complete Assy. (900 Series)
	S-1440	(Std.) Housing Only
	S-1531	(Std.) Complete Assy.
	S-1441	(F) Housing Only
	S-1529	(F) Complete Assy.
	S-1445	(X) Housing Only
	S-1527	(X) Complete Assy.
	S-1446	(XF) Housing Only
	S-1528	(XF) Complete Assy.
905/11605 Series	S-1432	Housing Only
	S-2131	Complete Assy.
T-8607/T-11607/T-14607 Series	S-1495	Housing Only
	S-1849	Complete Assy. w/Raodspeed Gov.
	S-1889	Complete Assy.
TX-14607	S-1541	Housing Only
1157DL/DLL Series	S-1434	Housing Only
11607L/LL 11707LL Series	S-1612	Housing Only
	S-1613	(F) Housing Only
	S-1614	(F) Housing Only Road Speed Gov.
11709/14709MLL	S-2205	(Std.) Housing Only
	S-2207	(Std.) Complete Assy.
	S-2206	(F) Housing Only
	S-2208	(F) Complete Assy.
18718	S-2270	(Std.) Housing Only
	S-2272	(Std.) Complete Assy.
	S-2269	(F) Housing Only
	S-2271	(F) Complete Assy.
CEEMAT		
9109/11109/12109/14109/16109	K-2754	Housing Only
	S-1876	Complete Assy.
AutoSelect		
11710/12710/13710/14710/15710/16710 - AC	S-1991	Housing Only
	S-1990	Complete Assy.

Mid Range Model Application	Part No.	Description
FS-4005	S-7021	Complete with reverse switch right front
	S-7022	Complete with neutral switch provision, reverse switch right rear
FS-4205	S-7077	Complete with reverse switch right front
	S-7085	Complete with neutral switch provision, reverse switch right rear
FS-5005	S-7012	Complete with reverse switch right front
	S-7086	Complete with neutral switch provision reverse switch right rear
FS-5205	S-7082	Complete with reverse switch right front
	S-7087	Complete with neutral switch provision, reverse switch right rear
FS-6005/6105	S-7058	Complete Assy.
FS-6205A/6305	S-7028	Complete Assy.
FS-5106/6206	S-1703	Complete Assy.
FS-5306/6306	S-7027	Complete Assy.
FS-6106	S-1524	Complete Assy. flat rail design
	S-1658	Complete Assy. round rail design

FS-6106 FLAT RAIL

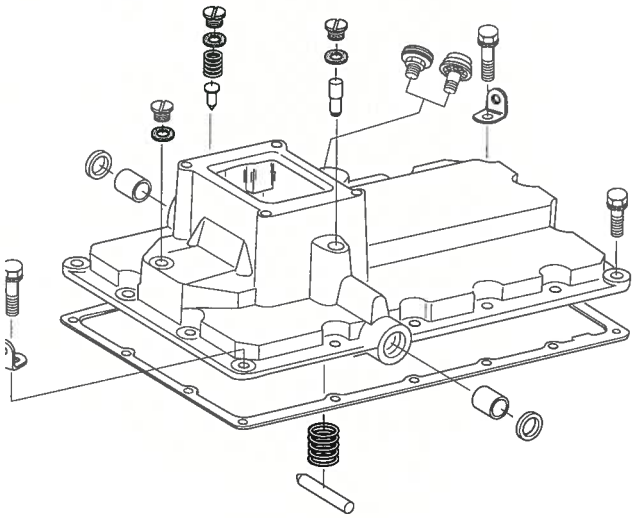

FS-6105

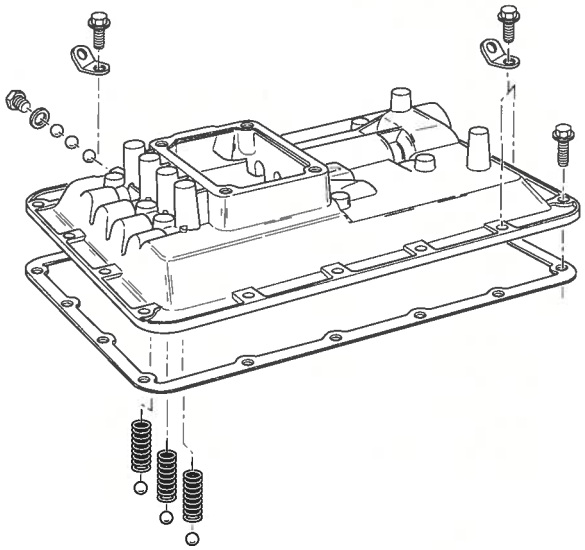

FS-6106 ROUND RAIL

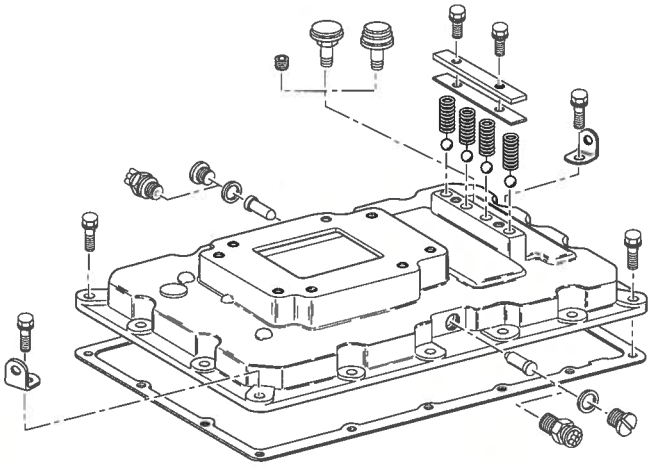

FS-5106

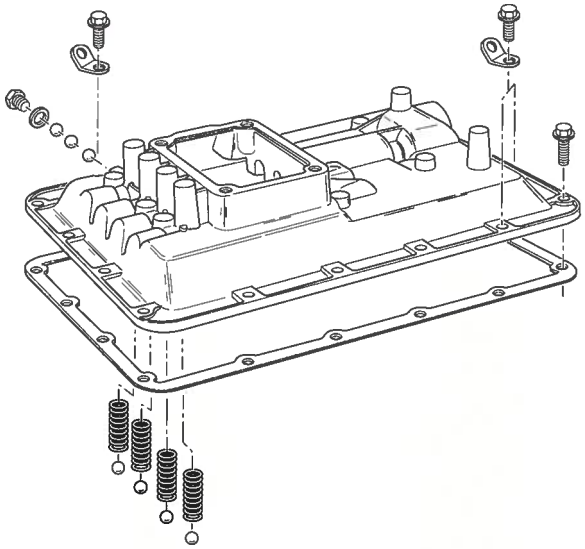

Reverse Light (9/16-18)

PLUG	15917
GASKET	15900
PIN STD.	15899
X	20119

SWITCH 22940
REPLACED 16830

SWITCH 22373
RT-6600 SERIES

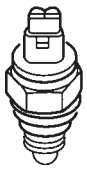

NEUTRAL LIGHT (3/4-16)

PLUG	17178
GASKET	17179

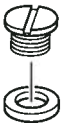

SWITCH 22941
REPLACED 12639

FIELD INSTALLATION
20069 (X-8L-619, 19709, 17106, X-9-603)

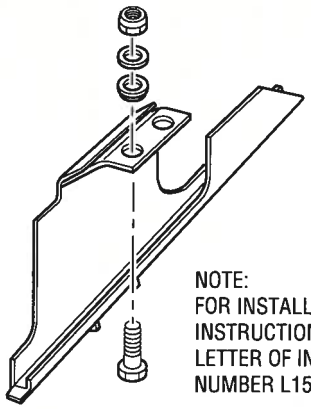

NOTE:
FOR INSTALLATION
INSTRUCTIONS SEE
LETTER OF INTRUCTIONS
NUMBER L1581

FS-7206, 8206
22997 (233043)

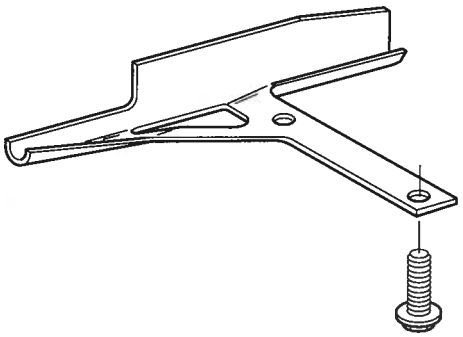

7 A-B SPEED
20449 (X-8-516, X-3-506)

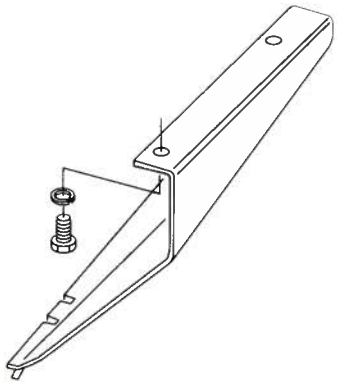

7608LL
23020 (X-8-429, 23101)

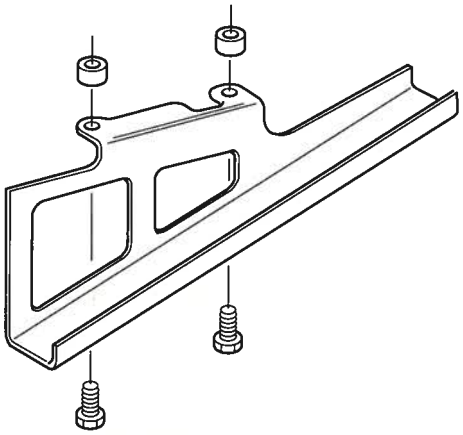

8-8L-9-10-11-13-15-18 SPEEDS
20070 (X-8-423)

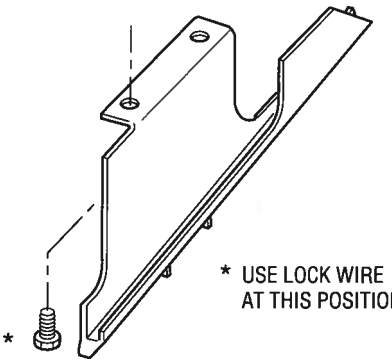

* USE LOCK WIRE
AT THIS POSITION

*

Oil Trough Field Installation Kit

Model Application	Part Number	Description
8-8L-9-10-13-15 Speeds	K-1824	900, 11500, 8608L, 11600,
		11700, 11800, 12500,
		12600, 12700, 14600,
		14700, 14800, 15600,
		15700, 15800 Series

Model	Input	Aux. Drive	Output	Idler	Quill	Front Box Countershaft Front	Front Box Countershaft Rear	Back Box Countershaft Front	Back Box Countersha Rear
5 Speed									
T/TO-11605	81504	5566504	81549	14287		81022	14366		
6 Speed									
T-11606	81504		14367	14287		81022	6488		
7 Speed									
T-8607	81504		81029	15045		81058	81059		81058
T-11607	81504		81567	15045		81058	81059		81058
T-14607	81504		81567	15045		81058	81059		81058
8 Speed									
RT-11608	81504	5566504	14367	14287		81022	14366	8879	81052
RT-14608	81504	5566504	15260	14287		19551	14366	8879	81012
RTO-11607L	81504	5566504	15260	14287		81022	14366	8879	81012
9 Speed									
RT-8608L	81504	5566504	14367	14287		81022	14366	8879	81052
RT-6609	4301863	81505	81029	15045		20832	20832	20606	20607
RT-8609	4301855	81505	81029	15045		20832	20832	20606	20607
RTO-11607LL	81504	5566504	15260	14287		81022	14366	8879	81566
RTO-11707DLL/LL	81504	5566504	21356	14287		81022	14366	21343	21343
RT-11609	81504	5566504	21356	14287		81022	14366	8879	81052
RTO-RTX-11609	81504	5566504	21356	14287		19551	14366	8879	81052
RT-11709	81504	5566504	21356	14287		81022	14366	21343	21343
RTO/RTX-11709	81504	5566504	21356	14287		19551	14366	21343	21343
RT-12609	81504	5566504	21356	14287		81022	14366	8879	81052
RTO/RTX-12609	81504	5566504	21356	14287		19551	14366	8879	81052
RT-12709	81504	5566504	21356	14287		81022	14366	21343	21343
RTO/RTX-12709	81504	5566504	21356	14287		19551	14366	21343	21343
RT-13609	81504	5566504	14367	14287		19551	14366	8879	81057
RTX-13609B/P/R	81504	5566504	14367	14287		19951	14366	8879	81057
RT/RTX-13709H	81504	5566504	21355	14287		19951	14366	21343	21343
RT-14609	81504	5566504	15260	14287		19951	14366	8879	81012
RTO/RTX-14609	81504	5566504	15260	14287		19551	14366	8879	81012
RT-14709	81504	5566504	15260	14287		19551	14366	21343	21343
RTO/RTX-14709	81504	5566504	15260	14287		19551	14366	21343	21343
RTX-16709	81504	5566504	21356	14287		19551	14366	21343	21343
10 Speed									
RT/RTO-6610	4301863	81505	81029	15045	15982	18657	18658	17553	16244
RT-7608LL	4301855	81505	14367	15045	81547	20832	20832	20639	81052
RTO-11608LL	81504	5566504	14367	14287	81547	19551	14366	8879	81052

Model	Input	Aux. Drive	Output	Idler	Quill	Front Box Countershaft Front	Front Box Countershaft Rear	Back Box Countershaft Front	Back Box Countershaft Rear
RTO-11708LL	81504	5566504	21355	14287		19551	14366	21343	21343
RTO-14608LL	81504	5566504	15260	14287	81547	19551	14366	8879	81566
RTO-14708LL	81504	5566504	21356	14287		19551	14366	21343	21343
RT-11610	81504	5566504	15260	14287		81022	14366	8879	81052
RTO-11610	81504	5566504	15260	14287		19551	14366	8879	81052
RT-12610	81504	5566504	15260	14287		81022	14366	8879	81052
RTO-12610	81504	5566504	15260	14287		19551	14366	8879	81012
RT/RTX-11710	81504	5566504	21355	14287		81022	14366	21343	21343
RT/RTX-12710	81504	5566504	21355	14287		19551	14366	21343	21343
RT/RTX-13710	81504	5566504	21355	14287		19551	14366	21343	21343
RT/RTX-14710	81504	5566504	21356	14287		19551	14366	21343	21343
RT-14610	81504	5566504	15260	14287		19551	14366	8879	81012
RTO-14610	81504	5566504	15260	14287		19551	14366	8879	81012
RTX-15710	81504	5566504	21356	14287		19551	14366	21343	21343
RTX-16710	81504	5566504	21356	14287		19551	14366	21343	21343
RTLO-11610	81504	5566504	14367	14287		19551	14366	21343	21343
RTLO-12610	81504	5566504	14367	14287		19551	14366	21343	21343
RTLO-13610	81504	5566504	14367	14287		19551	14366	21343	21343
RTLO-14610A	81504	5566504	15260	14287		19551	14366	20015	81057
RTLO-14610B	81504	5566504	15260	14287		19551	14366	21343	21343
RTLO-15610	81504	5566504	15260	14287		19551	14366	21343	21343
RTLO-16610	81504	5566504	15260	14287		19551	14366	4302074	4302074
11 Speed									
RTO-11709MLL	81504	5566504	21356	14287		19551	14366	21343	21343
RTO-14709MLL	81504	5566504	21356	14287		19551	14366	21343	21343
13 Speed									
RT-6613	4301863	81505	14367	15045		18657	18658	16817	81052
RTO-6613	4301863	81505	14367	15045		18657	18658	16817	81052
RT-11613	81504	5566504	14367	14287	81547	81022	14366	8879	81052
RTO-11613	81504	5566504	14367	14287	81547	81022	14366	8879	81052
RTOO-11613	81504	5566504	14367	14287	81547	19551	14366	8879	81052
RTO-11813	81504	5566504	14367	14287	81547	81022	14366	8879	81052
RT-14613	81504	5566504	15260	14287	81547	19551	14366	8879	81052
RTO-14613	81504	5566504	15260	14287	81547	19551	14366	4300828	81057
RTOO-14613	81504	5566504	15260	14287	81547	19551	14366	8879	81052
RTO-14813	81504	5566504	15260	14287	81547	19551	14366	20015	81057
RT-15613	81504	5566504	15260	14287	81547	19551	14366	8879	81052
RTO-15613	81504	5566504	15260	14287	81547	19551	14366	4300828	81057
RTO-15813	81504	5566504	15260	14287	81547	19551	14366	4300828	81057
RTLO-14613	81504	5566504	15260	14287		19551	14366	21343	21343
RTLO-12713	81504	5566503	21355	14287		19551	14366	21343	21343
RTLO-14713	81504	5566503	21356	14287		19551	14366	21343	21343
RTLO-16713	81504	5566503	21356	14287		19551	14366	4301851	4301851
15 Speed									
RT-11615	81504	5566504	14367	14287	81547	81022	14366	8879	81052
RT-11715	81504	5566504	21335	14287		81022	14366	21343	21343

Model	Input	Aux. Drive	Output	Idler	Quill	Front Box Countershaft Front	Front Box Countershaft Rear	Back Box Countershaft Front	Back Box Countershaft Rear
RTO-11615	81504	5566504	14367	14287	81547	19551	14366	8879	81502
RTO-11715	81504	5566504	21335	14287		19551	14366	21343	21343
RT-14615	81504	5566504	15260	14287	81547	19551	14366	8879	81566
RT-14715	81504	5566504	21356	14287		19551	14366	21343	21343
RTO-14615	81504	5566504	15260	14287	81547	19551	14366	8879	81566
RTO-14715	81504	5566504	21356	14287		19551	14366	21343	21343
RT-15615	81504	5566504	15260	14287	81547	19551	14366	8879	81566
RT-15715	81504	5566504	21356	14287		19551	14366	21343	21343
RTO-15615	81504	5566504	15260	14287	81547	19551	14366	8879	81566
RTO-15715	81504	5566504	21356	14287		19551	14366	21343	21343
18 Speed									
RTO-15618	81504	5566504	15260	14287		19551	14366	4300828	81057
RTLO-14618	81504	5566504	15260	14287		19551	14366	21343	21343
RTLO-16618	81504	5566504	15260	14287		19551	14366	21343	21343
RTLO-14718	81504	5566503	21356	14287		19551	14366	4301850	4301850
RTLO-16718	81504	5566503	21356	14287		19551	14366	4301850	4301850
RTLO-18718	81504	5566503	21355	14287		4302677	4302712	4301851	4301851
AutoSelect									
RTAO-11/12/13710AC	81504	5566504	21355	14287		19551	14366	21343	21343
RTAO-14/15/16710AC	81504	5566504	21356	14287		19551	14366	21343	21343
CEEMAT									
RT/RTO-9109A/B-AT	81504	5566504	14367	14287		19551	14366	8879	81052
RT/RTO-11109AT/ATS	81504	5566504	15260	14287		19551	14366	8879	23613
RT/RTO-11109ATE	81504	5566504	15260	14287		19551	14366	8879	81012
RT/RTO-11109ATR	81504	5566504	14367	14287		19551	14366	8879	81052
RT/RTO-12109AT	81504	5566504	14367	14287		19551	14366	8879	81052
RTO-13109AT	81504	5566504	15260	14287		19551	14366	8879	23613
RTO-13109ATE	81504	5566504	15260	14287		19551	14366	8879	81012
RT/RTO-14109AT/ATS	81504	5566504	15260	14287		19551	14366	8879	23613
RTO-14109ATE	81504	5566504	15260	14287		19551	14366	8879	23613
RTO-16109AT/ATE	4301417	5566504	15260	14287		19551	14366	8879	23613
CEMT									
RTLO-9118-MT	81504	5566504	15260	14287		19551	14366	21343	21343
RTLO-11118-MT	81504	5566504	15260	14287		19551	14366	21343	21343

Mid-Range Bearings - Cup and Cones

	Input Shaft	
Model	**Cup**	**Cone**
FS-4005 4205	1314774 (TR)	1314773 (TR)
FS-5005 5205	1314774 (TR)[3]	1314773 (TR)[3]
	235417 (TR)[4]	235414 (TR)[4]
FS-5106	675250 (TR)	742259 (TR)
	711123 (TR)[5]	5202047 (TR)[5]
FS-6105	675250 (TR)	742259 (TR)
FS-6106	20701 (R)	20701 (R)
FS-6206	675250 (TR)	742259 (TR)
FS-7206	675250 (TR)	742259 (TR)

		Countershaft Front	
Model	**Reverse Idler**	**Cup**	**Cone**
FS-4005	235276 (N)	672070 (TR)	675246 (TR)
FS-5005	235412 (N)	654166 (TR)	791943 (TR)
FS-5106	3315674 (N)	1313645 (TR)	791943 (TR)
FS-6105	3315674 (N)	1313645 (TR)	791943 (TR)
FS-6106	20707 (N)	20703 (R)	20703 (R)
FS-6206	3315674 (N)	1313645 (TR)	791943 (TR)
FS-7206	20707 (N)	1313645 (TR)	791943 (TR)

	Mainshaft Rear	
Model	**Cup**	**Cone**
FS-4005	654166 (TR)	654137 (TR)
FS-5005	235556 (TR)[1]	731321 (TR)[1]
	235422 (TR)[2]	237227 (TR)[2]
FS-5106	711123 (TR)	5202047 (TR)
FS-6105	711123 (TR)	5202047 (TR)
FS-6106	20701 (R)	20701 (R)
FS-6206	711123 (TR)	5202047 (TR)
FS-7206	711123 (TR)	5202047 (TR)

	Countershaft Rear	
Model	**Cup**	**Cone**
FS-4005	730362 (TR)	666554 (TR)
FS-5005	654166 (TR)	791943 (TR)
FS-5106	660181 (TR)	658981 (TR)
FS-6105	660181 (TR)	658981 (TR)
FS-6106	6488 (R)	6488 (R)
FS-6206	660181 (TR)	658981 (TR)
FS-7206	660181 (TR)	658981 (TR)

[1]-1.75 M/S [2]-1.96-2.00 M/S [3]-1.38-1.50 Input Shaft [4]-1.75 Input Shaft [5]-Replaced by K-2022

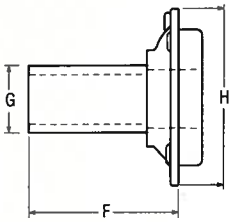

Model Series FS-4005/4205

Brg. Cover Part No.	Std. Seal	Description	F	G	H
22129	4300798	1.5 PUSH	6.2	1.94	6.25
23147	4300121	1.75 PULL	0.99		6.25
237743	4300798	1.375 PUSH	4.09	1.75	5.13
238104	4300798	1.5 PUSH	6.2	1.94	5.13
238395	4300204	1.75 PULL	0.92		5.13
238870	4300798	1.5 PUSH	6.73	1.87	5.13
239821	4300798	1.5 PUSH	4.38	1.87	5.13
240415	4300798	1.25 PUSH	6.89	1.62	5.13
3315303	3313958	1.5 PUSH	4.13	1.75	5.13
3315494	229366	1.18 PUSH	3.18	1.37	5.13
3315497	4300798	1.375 PUSH	4.73	1.75	5.13
3315552	3315692	1.375 PUSH	4.13	1.75	5.13
4300354	4300798	1.5 PUSH	6.73	1.87	6.25
4300355	4300204	1.5 PUSH	6.73	1.94	6.25
4300882	4300798	1.5 PUSH	5.08	1.81	5.13
4301288	4300204	1.75 PULL	1		6.25

Model Series FS-5005/5205

Brg. Cover Part No.	Std. Seal	Description	F	G	H
23147	4300121	1.75 PULL	0.99		6.25
235357	4300204	1.75 PUSH	5.8	2.25	6.25
235358	4300798	1.5 PUSH	6.2	1.94	7.22
235650	4300204	1.75 PULL	1.35		6.25
4300354	4300798	1.5 PUSH	6.73	1.87	6.25
4300355	4300204	1.5 PUSH	6.73	1.94	6.25
4300882	4300798	1.5 PUSH	5.08	1.81	5.13
4301288	4300204	1.75 PULL	1		6.25

Model Series FS-6005/6105 6205/6305

Brg. Cover Part No.	Std. Seal	Description	F	G	H
21992	19110	1.75 PUSH	5.83	2.25	6.25
3316171	4300121	1.75 PULL	1.4		6.25
3316313	4300798	1.5 PUSH	5.08	1.81	7.25
4300888	4300121	1.75 PULL	1.41		6.25
4301144	4300121	1.75 PULL	1.01		6.25
4301543	4300204	1.75 PUSH	2.76	2.39	6.25
4302356		1.75 PULL	0.992		6.25

Model Series FS-5106/5306 6206/6306

Brg. Cover Part No.	Std. Seal	Description	F	G	H
21893	4300798	1.5 PUSH	6.73	1.87	6.25
21982	4300798	1.5 PUSH	6.2	1.94	7.22
21992	19110	1.75 PUSH	5.83	2.25	6.25
23106	4300121	1.75 PULL	1.25		6.25

Front Bearing Cover — Mid-Range

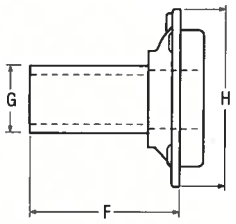

Model Series FS-5106/5306 6206/6306

Brg. Cover Part No.	Std. Seal	Description	F	G	H
3316171	4300121	1.75 PULL	1.4		6.25
3316313	4300798	1.5 PUSH	5.08	1.81	7.25
4300650	4300204	1.5 PUSH	6.73	1.94	6.25
4300887	4300204	1.5 PUSH	5.08	1.81	7.25
4300888	4300121	1.75 PULL	1.41		6.25
4301144	4300121	1.75 PULL	1.01		6.25

Model Series FS-7206

Brg. Cover Part No.	Std. Seal	Description	F	G	H
21992	19110	1.75 PUSH	5.83	2.25	6.25
3316171	4300121	1.75 PULL	1.4		6.25
4300888	4300121	1.75 PULL	1.41		6.25

Model Series FS-8206

Brg. Cover Part No.	Std. Seal	Description	F	G	H
21992	19110	1.75 PUSH	5.83	2.25	6.25
3316171	4300121	1.75 PULL	1.4		6.25
4300112	19110	1.75 PUSH	4.8	2.25	6.25

Input Shaft and Drive Gear

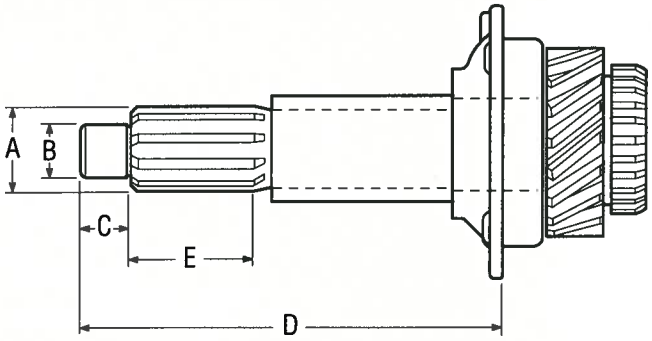

Model Series FS-4005

Shaft No.	Brg. Cvr.	Clutch Type	Bearing	A	B	C	D	E	Ratio
23056	3315303	PUSH	1314773	1.5	0.98	1.87	8.4	2.59	A
23144	23147	PUSH/PULL	235418	1.5	0.98	0.69	10.42	3.5	A
23145	23147	PUSH/PULL	235418	1.5	0.98	0.69	10.42	3.5	B/C
239802	4300882, 238870	PUSH	1314773	1.5	0.98	0.75	8.57	2.62	A
239803	4300882, 239821	PUSH	1314773	1.5	0.98	0.88	7.64	2.62	A
239804	238104	PUSH	1314773	1.5	0.98	0.75	10.34	3.25	A
239806	22129	PUSH	1314773	1.5	0.98	0.81	10.47	2.62	A
239807	4300882	PUSH	1314773	1.5	0.98	0.75	8.57	2.62	B/C
239808	4300882, 239821	PUSH	1314773	1.5	0.98	0.88	7.64	2.62	B/C
239809	238104	PUSH	1314773	1.5	0.98	0.75	10.34	3.25	B/C
239810	237743	PUSH	1314773	1.375	0.98	0.72	6.82	2.14	B/C
239811	240415	PUSH	1314773	1.25	0.98	0.88	9.86	2.12	B/C
239812	238870, 22129	PUSH	1314773	1.5	0.98	0.81	10.47	2.62	B/C
239813	237743	PUSH	1314773	1.375	0.98	0.72	6.82	2.14	A
240489	23147	PUSH/PULL	235418	1.75	0.98	0.81	10.47	3.58	B/C
3315536	23147	PUSH/PULL	235418	1.75	0.98	0.69	10.42	3.5	B/C
3315857	23147	PUSH/PULL	235418	1.75	1.18	0.69	10.42	3.5	A
3316370	3315303	PUSH	1314773	1.375	0.75	2.7	8.4	2	B
3316412	3315303	PUSH	1314773	1.375	0.75	2.46	8.4	2	A
4300414	4300354, 4300355	PUSH	235418	1.5	0.98	0.81	10.47	2.62	A
4300420	4300354	PUSH	235418	1.5	0.98	0.81	10.47	2.62	B/C
4300883	4300882	PUSH	1314773	1.5	0.98	0.88	7.64	2.62	B/C
4300884	4300882	PUSH	1314773	1.5	0.98	0.88	8.57	2.62	B/C
4301050	4300882	PUSH	1314773	1.5	0.98	0.75	8.57	2.62	A
4301051	4300882	PUSH	1314773	1.5	0.98	0.88	7.64	2.62	A

Model Series FS-4205

Shaft No.	Brg. Cvr.	Clutch Type	Bearing	A	B	C	D	E	Ratio
4301526	4300882	PUSH	1314773	1.5	0.98	0.75	8.57	2.64	A
4301614	4300882, 23147	PUSH/PULL	235418	1.75	1.18	0.69	10.42	3.54	A
4301615	4300882	PUSH/PULL	235418	1.5	0.98	0.69	10.42	3.54	A
4301616	4300882	PUSH	1314773	1.5	0.98	0.75	8.57	2.64	A
4301618	4300882	PUSH	1314773	1.5	0.98	0.88	7.64	2.64	A
4301619	4300882, 239821	PUSH	1314773	1.5	0.98	0.88	7.64	2.64	A
4301620	4300354, 4300355	PUSH	235418	1.5	0.98	0.81	10.47	2.64	A
4301621	22129	PUSH	1314773	1.5	0.98	0.81	10.47	2.64	A
4301622	237743	PUSH	1314773	1.375	0.98	0.72	6.82	2.16	A
4301623	3315552	PUSH	1314773	1.375	0.67	0.93	7.04	2.23	A
4301624	3315303	PUSH	1314773	1.375	0.98	1.87	8.4	2.63	A
4301625	4300882	PUSH/PULL	235418	1.75	0.98	0.81	10.47	1.87	B/C
4301626	4300882	PUSH	1314773	1.5	0.98	0.75	8.57	2.64	B/C
4301627	4300882	PUSH	1314773	1.5	0.98	0.75	8.57	2.64	B/C
4301628	4300882	PUSH	1314773	1.5	0.98	0.88	7.64	2.64	B/C
4301629	4300882, 23982	PUSH	1314773	1.5	0.98	0.88	7.64	2.64	B/C
4301630	238104	PUSH	1314773	1.5	0.98	0.75	10.34	3.29	B/C
4301631	238870, 22129	PUSH	235418	1.5	0.98	0.81	10.47	2.64	B/C
4301632	23147	PUSH/PULL	235418	1.5	0.98	0.69	10.42	3.53	B/C
4301633	4300355	PUSH	235418	1.5	0.98	0.81	10.47	2.64	B/C

Input Shafts — Mid-Range

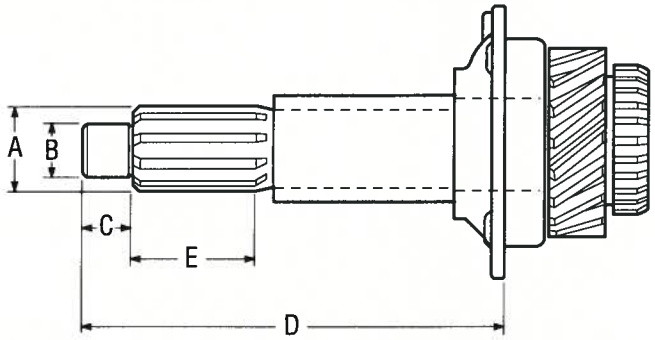

Model Series FS-4205

Shaft No.	Brg. Cvr.	Clutch Type	Bearing	A	B	C	D	E	Ratio
4301634	237743	PUSH	1314773	1.375	0.98	0.72	6.82	2.16	B/C
4301635	3315552	PUSH	1314773	1.375	0.67	0.93	7.04	2.22	C
4301826	23147	PUSH/PULL	235418	1.750	1.18	0.69	10.42	3.54	B/C
4301827	4300882	PUSH	1314773	1.375	0.75	2.46	8.4	2.04	A
4302060	3315303	PUSH	1314773	1.375	0.75	2.46	8.4	2.04	B/C
4302061	3315497	PUSH	1314773	1.375	0.98	0.85	7.63	2.23	A
4302062	3315494	PUSH	1314773	1.120	0.59	1.08	6.63	1.79	A

Model Series FS-5005

Shaft No.	Brg. Cvr.	Clutch Type	Bearing	A	B	C	D	E	Ratio
235351	4300882	PUSH	1314773	1.5	0.98	0.75	8.6	2.63	A
235353	238104	PUSH	1314773	1.5	0.98	0.75	9.9	2.88	A
235354	238104, 4300354	PUSH	1314773	1.5	0.98	0.75	10.4	3.25	A
235355	238104	PUSH	1314773	1.5	0.98	0.75	9.9	2.88	B
235432	238104	PUSH	1314773	1.5	0.98	0.75	10.4	3.25	B/C
235433	235357	PUSH	235418	1.75	1.18	0.75	9.9	3.5	A
235434	4300882	PUSH	1314773	1.5	0.98	0.75	8.6	2.63	B/C
235648	23147, 4300650	PUSH/PULL	235418	1.75	1.18	0.69	10.4	3.5	A
235649	23147, 4300650	PUSH/PULL	235418	1.75	1.18	0.69	10.4	3.5	B/C
2760831	23147, 4300650	PUSH/PULL	235418	1.75	0.98	0.81	10.5	3.58	A
2760832	23147, 4300650	PUSH/PULL	235418	1.75	0.98	0.81	10.5	3.58	B/C
4300423	4300355	PUSH	235418	1.5	0.98	0.98	10.7	2.63	A
4300424	4300355	PUSH	235418	1.5	0.98	0.98	10.7	2.63	B/C
4300885	4300882	PUSH	1314773	1.5	0.98	0.75	8.6	2.63	A
4300886	4300882	PUSH	1314773	1.5	0.98	0.75	8.6	2.63	B/C

Model Series FS-5205

Shaft No.	Brg. Cvr.	Clutch Type	Bearing	A	B	C	D	E	Ratio
235352	4300882	PUSH	235418	1.75	1.18	0.75	10.6	3.5	B/C
4301683	4300882	PUSH	1314773	1.5	0.98	0.75	8.6	2.63	A
4301778	4300882	PUSH	1314773	1.5	0.98	0.75	8.6	2.63	B/C
4301825	23147	PUSH/PULL	235418	1.75	1.18	0.69	10.4	3.5	A
4301874	238104	PUSH	1314773	1.5	0.98	0.75	9.9	2.88	A
4301875	238104	PUSH	1314773	1.5	0.98	0.75	10.4	3.25	A
4301876	235357	PUSH	235418	1.75	1.18	0.75	9.9	3.5	A
4301877	23147	PUSH/PULL	235418	1.75	0.98	0.81	10.5	3.6	A
4301879	4300355	PUSH	235418	1.5	0.98	0.98	10.7	2.63	A
4301880	4300882	PUSH	1314773	1.5	0.98	0.75	8.6	2.63	B/C
4301885	4300882	PUSH	235418	1.75	1.18	0.75	10.6	3.5	B/C
4301893	235358	PUSH	1314773	1.5	0.98	0.75	9.9	2.88	B/C
4301894	4300355	PUSH	235418	1.5	0.98	0.98	10.7	2.63	B/C
4301896	23147	PUSH/PULL	235418	1.75	1.18	0.69	10.4	3.5	B/C
4301897	23147, 235650	PUSH/PULL	235418	1.75	0.98	0.81	10.5	3.6	A
4301898	4300882	PUSH	1314773	1.5	0.98	0.75	8.6	2.63	A
4302198	4300355	PUSH	235418	1.5	1.18	0.98	10.7	2.63	A
4302199	4300355	PUSH	235418	1.5	1.18	0.98	10.7	2.63	A

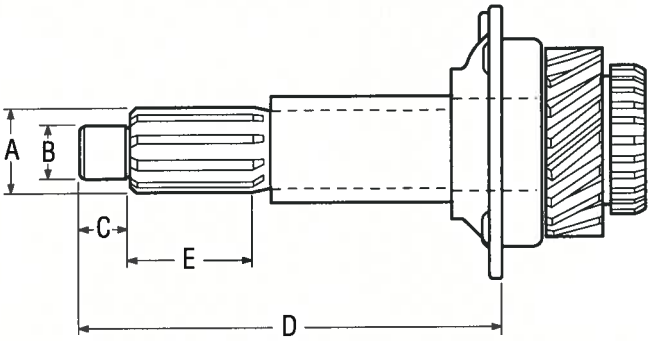

Model Series FS-5205

Shaft No.	Brg. Cvr.	Clutch Type	Bearing	A	B	C	D	E	Ratio
4302763	235358	PUSH	1314773	1.5	0.98	0.75	10.4	3.25	A
4302825	235358	PUSH	1314773	1.5	0.98	0.75	9.9	2.88	A
4302826	235357	PUSH	235418	1.75	1.18	0.75	9.9	3.5	A
4302827	23147	PUSH/PULL	235418	1.75	1.18	0.69	10.4	3.5	A
4302828	23147	PUSH/PULL	235418	1.75	0.98	0.81	10.5	3.6	A
4302829	4300355	PUSH	235418	1.5	0.98	0.98	10.7	2.63	A
4302830	4300822	PUSH	1314773	1.5	0.98	0.75	8.6	2.63	B/C
4302831	235358	PUSH	1314773	1.5	0.98	0.75	9.9	2.88	B/C
4302832	4300355	PUSH	235418	1.5	0.98	0.98	10.7	2.63	B/C
4302833	4300822	PUSH	1314773	1.5	0.98	0.75	8.6	2.63	A
4302834	23147, 4300355	PUSH/PULL	235418	1.75	1.18	0.69	10.4	3.5	B/C
4302835	23147, 235650	PUSH/PULL	235418	1.75	0.98	0.81	10.5	3.6	A
4302836	4300822	PUSH	1314773	1.5	0.98	0.75	8.6	2.63	A
4302837	4300355	PUSH	235418	1.5	1.18	0.98	10.7	2.63	A
4302852	4300882	PUSH	1314773	1.5	0.98	0.75	8.6	2.63	B/C

Model Series FS-5106/6206

Shaft No.	Brg. Cvr.	Clutch Type	Bearing	A	B	C	D	E
21896	21893	PUSH/PULL	742259	1.5	0.98	0.81	10.5	3.5
21898	3316171, 4300888, 4301144	PUSH/PULL	742259	1.75	0.98	0.81	10.5	3.75
21968	21982	PUSH/PULL	742259	1.5	0.98	0.75	9.9	2.87
3316257	3316171, 4301144, 23106	PUSH/PULL	742259	1.75	1.18	0.69	10.4	3.5
3316314	3316313	PUSH	742259	1.5	0.98	0.75	8.6	2.63
4300652	4300650	PUSH/PULL	742259	1.5	0.98	0.81	10.5	3.5
4300889	4300887	PUSH	742259	1.5	0.98	0.75	8.6	2.63

Model Series FS-5306/6306

Shaft No.	Brg. Cvr.	Clutch Type	Bearing	A	B	C	D	E
4301402	21893	PUSH/PULL	742259	1.5	0.98	0.81	10.5	3.5
4301403	3316171, 4300888, 4301144	PUSH/PULL	742259	1.75	0.98	0.81	10.5	3.75
4301404	21982	PUSH/PULL	742259	1.5	0.98	0.75	9.9	2.87
4301408	3316313	PUSH	742259	1.5	0.98	0.75	8.6	2.63
4301409	4300650	PUSH/PULL	742259	1.5	0.98	0.81	10.5	3.5
4301485	3316171, 4301144	PUSH/PULL	742259	1.75	1.18	0.75	10.4	2.63
4302112	21893	PUSH/PULL	742259	1.5	1.18	0.81	10.5	3.5

Model Series FS-6005/6105

Shaft No.	Brg. Cvr.	Clutch Type	Bearing	A	B	C	D	E
21900	3316171, 4300888, 4301144	PUSH/PULL	742259	1.75	0.98	0.81	10.5	3.75
3316168	3316171	PUSH/PULL	742259	1.75	1.18	0.69	10.4	3.5

Model Series FS-6205/6305

Shaft No.	Brg. Cvr.	Clutch Type	Bearing	A	B	C	D	E
4301748	3316171	PUSH/PULL	742259	1.75	1.18	6.9	10.4	3.5
4301750	4300888, 4301144	PUSH/PULL	742259	1.75	0.98	0.81	10.5	3.8
4301756	21982	PUSH/PULL	742259	1.75	1.18	0.92	10.6	3.6

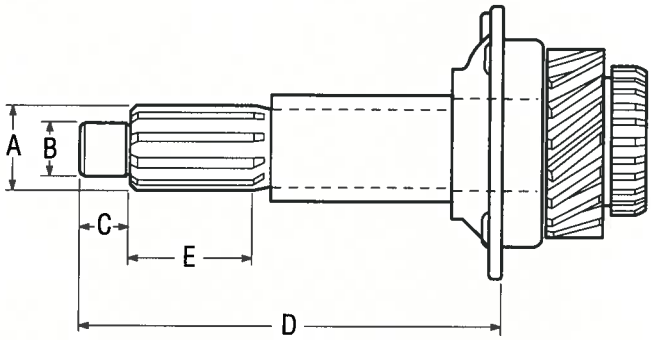

Model Series	Shaft No.	Brg. Cvr.	Clutch Type	Bearing	A	B	C	D	E
FS-7206	23043	3316171	PUSH/PULL	742259	1.75	1.18	0.81	10.5	3.75
	23046	3316171, 4300888	PUSH/PULL	742259	1.75	0.98	0.81	10.5	3.75
	23577	21982	PUSH/PULL	742259	1.75	0.98	0.81	10.5	3.75

Model Series	Shaft No.	Brg. Cvr.	Clutch Type	Bearing	A	B	C	D	E
FS-8206	23376	3316171	PUSH/PULL	742259	1.75	0.98	0.81	10.5	3.75
	23377	3316171	PUSH/PULL	742259	1.75	1.18	0.81	10.5	3.75
	4300578	3316171	PUSH/PULL	742259	1.75	0.98	0.81	10.5	3.75

Model Series Application: T-905, 11605, RTO-1157, 11707. Use 16566 Bushing

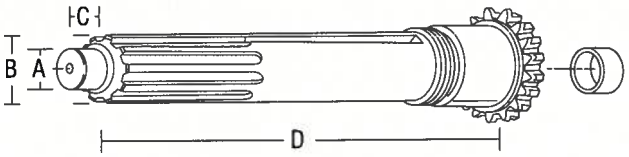

Shaft	Assy	Type	A	B	C	D	Seal	Cover	Nut or SR
14660	S-1130	Push	1-3/4	1.18	0.81	12.12	-	F	3
14661	S-1131	Pull	1-3/4	1.18	0.81	12.12	-	G	4
14995	S-1132	Push	2	1.18	0.81	12.12	-	I	3
15110	S-1133	Pull	2	1.18	0.81	12.12	-	J	4
15112	S-1134	Push	2	1.18	0.81	12.12	D	K	5
15515	-	Push	1-3/4	0.98	0.81	12.13	-	F	3
15621	-	Pull	1-3/4	0.98	0.81	12.12	-	G	4
15669	-	Push	1-1/2	0.98	0.81	11.2	-	W/X	3
16511	-	Push	1-3/4	0.98	1.47	14.41	-	F	3
16599	-	Push	1-3/4	0.98	1.38	13.44	-	F	3
16983	S-1343	Pull	1-3/4	1.18	0.81	12.12	B	H	6
16984	S-1344	Pull	2	1.18	0.81	12.12	C	H	6
17012	S-1345	Pull	1-3/4	0.98	0.81	12.12	B	H	6
17018	S-1346	Push	1-3/4	0.98	0.81	12.13	D	Q	6
17027	S-1135	Push	1-3/4	1.18	0.81	12.12	D	Q	6
17493	-	Push	1-3/4	1.18	1.25	12.63	-	F	3
17554	-	Push	1-3/4	1.18	1.19	11.47	-	F	3
18387	-	Push	1-3/4	0.98	1.23	12.92	A	U	3
18551	-	Pull	1-3/4	0.98	1.23	12.92	-	G	4
19697	-	Push	2	0.98	1.00	12.52	D	K	5
19771	-	Push	1-3/4	0.98	1.39	12.92	-	F	3
20530	S-1496	Push	1-3/4	1.18	0.81	12.12	-	L	6
20531	S-1497	Pull	1-3/4	1.18	0.81	12.12	-	M	6
20996	-	Pull	1-3/4	0.98	0.81	12.12	-	G	6

FOR COVER - SEAL - NUT - SNAP RING SEE PAGE 63 and 64

Model Series Application: RT-610, 6610, 613, 6613. Use 15977 Bushing

Shaft	Assy	Type	A	B	C	D	Seal	Cover	Nut or SR
18441	S-1250	Push	1-3/4	1.18	0.81	12.28	-	A	1
18442	S-1251	Push	1-3/4	0.98	0.81	12.28	-	A	1
18443	S-1252	Push	1-1/2	0.98	0.81	11.42	-	B	1
18444	S-1253	Pull	1-3/4	1.18	0.81	12.28	-	C	1
18445	S-1254	Push	1-1/2	0.98	0.81	12.28	-	B	1
18446	S-1255	Pull	1-3/4	0.98	0.81	12.28	-	C	1
20308	-	Push	1-3/4	1.18	1.25	13.08	-	A	1
22287	-	Push	1-1/2	0.98	1.75	13.38	-	E	1
22731	-	Push	1-3/4	0.79	0.73	12.43	-	A	1

Model Series Application: T-8607, T-11607, T-14607 Series. Use 20171 Bushing

Shaft	Assy	Type	A	B	C	D	Seal	Cover	Nut or SR
15110	S-1517	Pull	2	1.18	0.81	12.12	-	J	4
23569	S-1663	Pull	2	1.18	0.81	12.12	-	N	6

Model Series Application: RT-8609, 7608LL Series. Use 15977 Bushing

Shaft	Assy	Type	A	B	C	D	Seal	Cover	Nut or SR
20787	A-5021	Pull	2	1.18	0.81	12.50	-	D	2
20788	A-5022	Pull	1-3/4	1.18	0.81	12.50	-	D	2
21001	A-5083	Pull	1-3/4	0.98	0.81	12.49	-	D	2

FOR COVER - SEAL - NUT - SNAP RING SEE PAGE 63 and 64

Model Series Application: 8608L - 900 - 9500 - 11500 - 11600 - 11700 - 11800 - 12500 - 12600 - 12700 - 14600 - 14700 - 14800 - 15600 - 15700 - 15800 - Use 16566 Bushing 16600 - 16700 - 18718

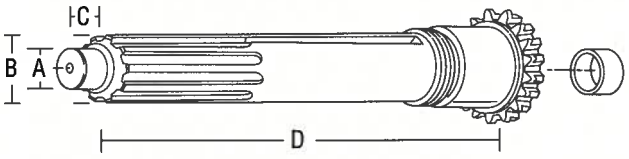

Shaft	Assy	Type	A	B	C	D	Seal	Cover	Nut or SR
16465	S-1128	Pull	2	1.18	0.81	11.94	-	J	4
16466	S-1129	Push	2	1.18	0.81	11.94	-	I	3
18562	-	Push	2	0.98	1.56	13.62	D	K	5
18693	-	Push	2	1.18	0.81	14.77	D	K	5
18790	-	Pull	2	0.98	1.56	13.62	-	J	4
18792	-	Push	1-3/4	0.98	1.27	14.19	A	R	3
18837	S-1409	Pull	2	1.18	0.81	11.94	C	H	6
18845	-	Push	2	0.98	1.27	14.19	D	S	5
19316	S-1406	Pull	1-3/4	1.18	0.81	11.94	-	G	4
19694	-	Push	1-3/4	0.98	1.22	12.72	A	R	3
19698	-	Push	2	0.98	1.00	12.38	C	H	6
19699	S-1485	Pull	2	0.98	1.00	12.38	-	F	3
19714	-	Push	1-3/4	1.18	0.81	11.94	-	F	3
19715	-	Push	1-3/4	0.98	0.81	11.94	-	F	3
19716	-	Push	2	1.18	0.81	11.94	D	K	5
19719	-	Push	1-3/4	0.98	1.47	14.15	-	F	3
19720	S-1416	Pull	1-3/4	1.18	0.81	11.94	B	H	6
19722	-	Push	1-3/4	0.98	0.81	11.94	D	Q	3
19724	-	Push	1-3/4	1.18	0.81	11.94	D	Q	3
19728	-	Push	1-3/4	0.98	1.39	12.73	-	F	3
19729	-	Push	1-3/4	1.18	1.19	11.28	A	P	3
19730	-	Push	1-3/4	1.18	1.25	12.44	-	F	3
19731	-	Push	1-3/4	1.18	1.19	11.28	-	F	3
19732	-	Push	1-3/4	1.18	1.25	12.56	-	F	3
20333	-	Push	2	0.98	1.22	12.7	D	K	5

FOR COVER - SEAL - NUT - SNAP RING SEE PAGE 63 and 64

Shaft	Assy	Type	A	B	C	D	Seal	Cover	Nut or SR
20532	S-1498	Push	1-3/4	1.18	0.81	11.94	-	L	6
20533	-	Push	1-3/4	0.98	0.81	11.94	-	I	6
20534	-	Push	1-3/4	0.98	1.47	14.15	-	L	6
20538	S-1504	Pull	1-3/4	1.18	0.81	11.94	-	M	6
20539	-	Push	1-3/4	0.98	1.39	12.73	-	L	6
20543	-	Push	1-3/4	1.18	1.19	11.28	-	L	6
20544	-	Push	1-3/4	1.18	1.25	12.56	-	L	6
20997	-	Push	1-3/4	1.18	1.25	12.72	-	L	6
23224	-	Push	1-7/8	1.18	1.30	12.64	-	Y	6
23566	S-1659	Pull	2	1.18	0.81	11.94	-	N	6
23567	S-1660	Push	2	1.18	0.81	11.94	-	O	6

FOR COVER - SEAL - NUT - SNAP RING SEE PAGE 63 and 64

Nut or Snap Ring

15253
16723
16980

8997 (2-1/8-16 UNSLH)

8858 (2-1/8-16 UNSLH)
11466 (2-1/4-16 NLSH)

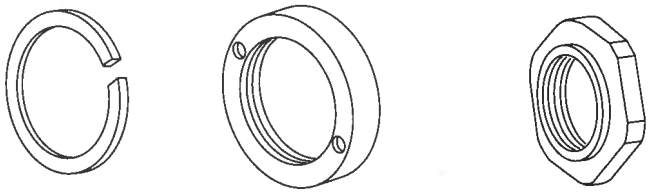

Nut or Snap Ring

Item	Part #	Description
1	15253	Snap Ring
2	16723	Snap Ring
3	8858	Nut Push
4	8997	Nut Pull
5	11466	Nut Push
6	16980	Snap Ring

Wear Sleeve

16979 Sleeve 1-3/4"w/seal
16978 Sleeve 2"w/seal

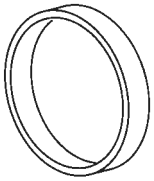

Use with
16983, 16984, 17012, 18837,
19696, 19699, 19720, 19721

Bushing

Item	Part #
1	15977
2	16566
3	20171

Oil Seal

Item	Part #	Description
A	18386	
B	16976	1-3/4"
C	16977	2"
D	12581	
E	16020	

Front Bearing Cover

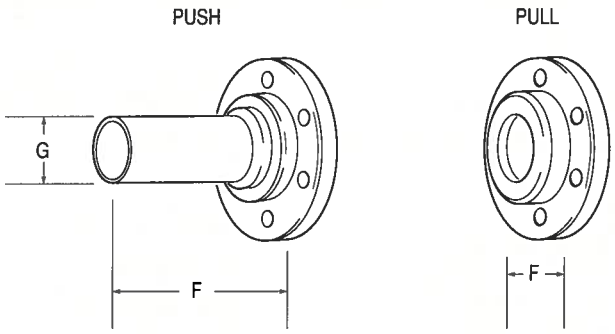

Item	Part#	Seal	Description	F	G
6609, 610, 6610, 613, 6613					
A	15020	-	1-3/4" Push	6.22	2.25
	16324	-	1-3/4" Push	6.87	2.25
B	15491	E	1-1/2" Push	5.78	1.87
	15647	E	1-1/2" Push	7.25	1.94
	15727	E	1-1/2" Push	6.22	1.87
	15265	E	1-1/2" Push	7.06	1.87
	16277	E	1-1/2" Push	6.25	1.94
C	15019	-	1-3/4" Pull	1.04	-
E	22288	E	1-1/2" Push	6.91	1.87
8609, 7608LL					
D	20785	-	2" Pull	1.04	-
D	20777	-	1-3/4" Pull	1.04	-
8607, 8608L, 900, 9500, 11500, 11600, 11700, 11800, 12500, 12600, 12700, 14600, 14700, 14800, 15600, 15700, 15800, 16600, 16700, 18700					
F	14370	-	1-3/4" Push	6.22	2.24
G	14267	-	1-3/4" Pull	1.04	-
H	18699	B/C	1-3/4" and 2" Pull	1.03	-
I	14994	-	2" Push	6.00	2.46
J	15111	-	2" Pull	1.03	-
K	15113	D	2" Push	6.00	2.46
L	20551	-	1-3/4" Push	6.22	2.25
M	20552	-	1-3/4" Pull	1.04	-
N	20550	-	2" Pull	1.04	-
O	20549	-	2" Push	6.00	2.46
Q	17017	D	1-3/4" Push	6.22	2.25
R	18791	A	1-3/4" Push	6.58	2.12
S	18846	D	2" Push	6.58	2.36
U	18388	A	1-3/4" Push	7.09	2.24
V	18424	A	1-3/4" Push	6.22	2.25
W	15458	-	1-1/2" Push	5.78	1.87
X	15459	-	1-1/2" Push	6.19	1.87

Note: For oil seal chart, see page 63.

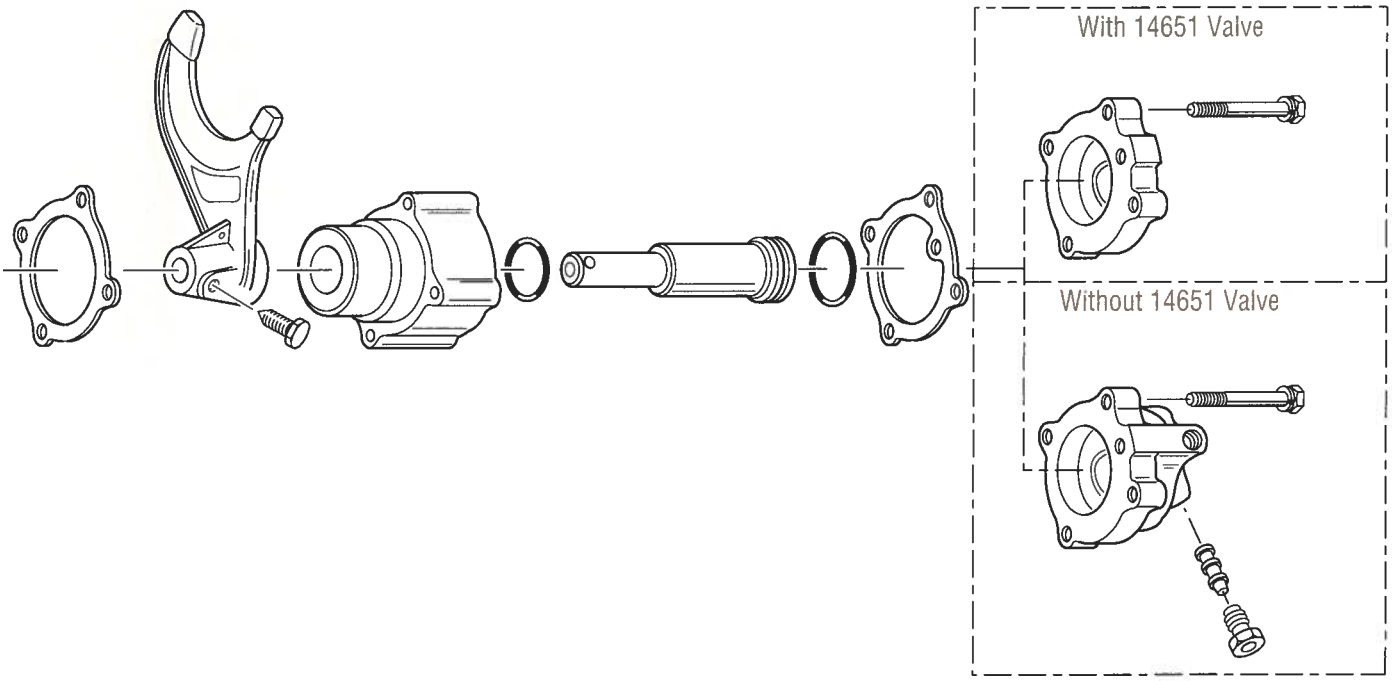

K-1450 Range Cylinder Kit
RT-11608, 14608, 8608L, 11609, 11709, 12609, 12709, 13609, 13709, 14609, 14709, 16709 Series. RT-7608LL, 11610, 11710, 12610, 12710, 13710, 14610, 14710, 15710, 16710 Series. RT-6613, 11613, 11813, 14613, 14813, 15613, 15813 Series. RT-11615, 14615, 15615 Series. RTO-11607 L/LL, 11608LL, 14608LL, RT-15618, RTLO-14618.

K-1451 Reduction Cylinder w/17070 Cylinder
RT-6613, 11613, 11813, 15613, 15813 Series. RT-11615, 14615, 15615 Series. RTO-11608LL, 14608LL.

K-1447 Range and Reduction Cylinder w/17070 Cylinder
RT-11610 Series. RT-6613, 11613, 11813, 14613, 14813, 15613, 15813 Series. RT-11615, 14615, 15615 Series.

K-2002 Range and Reduction Cylinder w/21210 Cylinder
RT-7608LL, RTO-11608LL, 14608LL, RT-11613, 11813, 14613, 14813, 15613, 15813 Series. RT-15618 Series. RTLO-14613, 14618, 16618.

K-2078 Reduction/Splitter Cylinder w/21210 Cylinder
RT-7608LL, RTO-11608LL, RTLO-11610, 12610, 13610, 14610 A & B, 15610, 16610 Series. RT-14613, 14813 Series. RTLO-14613, 14618, 16618, RT-14615, 15615, 15618 Series.

K-1958 Range Cylinder
RT-6609, 8609, 6610 Series.

K-2297 Range Cylinder
RTLO-11610, 12610, 13610, 14610 A & B, 15610, 16610.

K-2839 Range Cylinder
RTAO-11710AC, 12710AC, 13710AC, 14710AC, 15710AC, 16710AS, RTAO-14710-AS.

Air Cylinder "O" Ring Kits

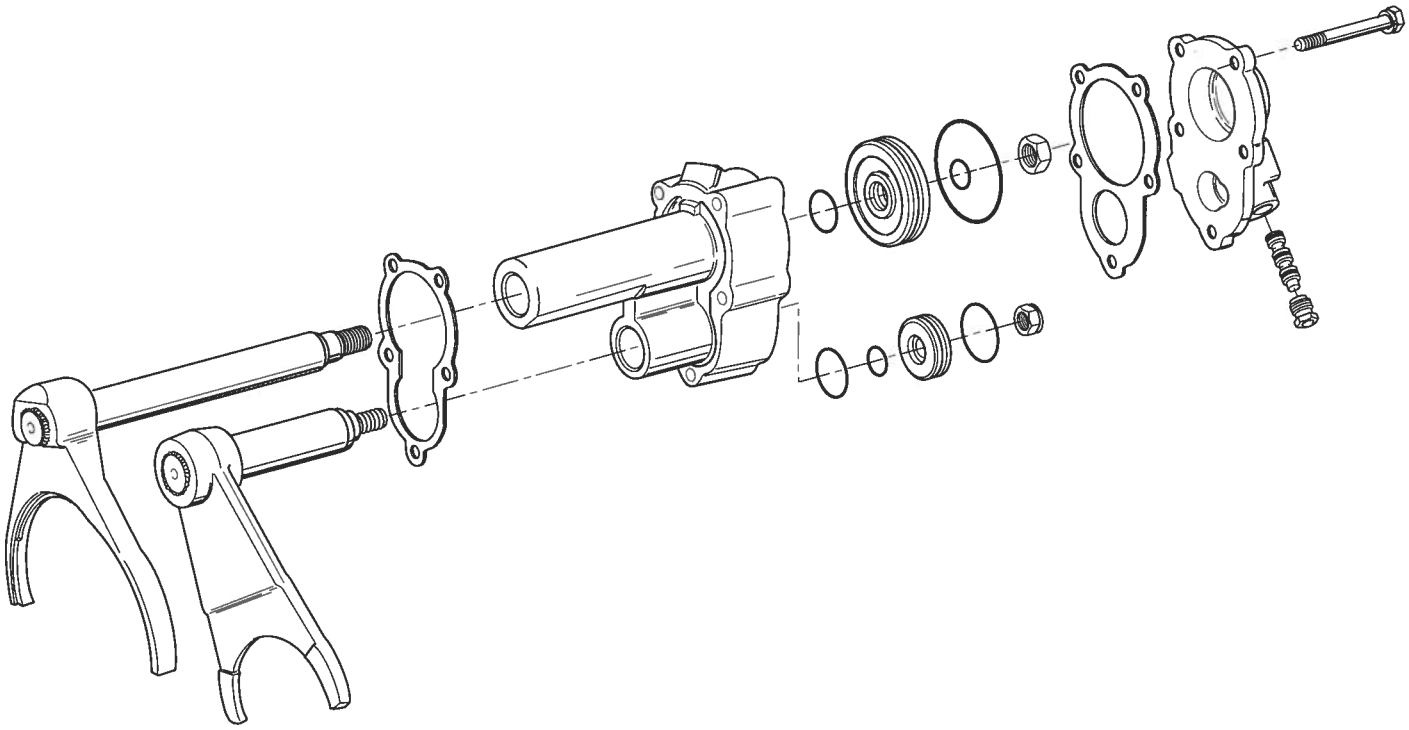

K-2802 Range Cylinder
RT-9109, 11109, 12109, 13109, 14109 Series. RTLO-12713, 14713, 16713, 14718, 16718, 18718.

K-2803 Splitter Cylinder
RTLO-12713, 14713, 16713, 14718, 16718.

K-2804 Range and Splitter Cylinders
RTLO-12713, 14713, 16713, 14718, 16718, 18718.

K-2054 Combination Cylinder
RTO-11707LL & DLL, 11708LL, 14708LL, RT-11715, 14715, 15715 Series.

K-2846 Combination Cylinder
RTO-11709MLL, 13707DLL/MLL, 14709MLL.

K-1457 Insert Valve
RT-7608LL, RTO-11707LL/DLL, 11608LL, 11708LL, 14608LL, 14708LL, RT-6613, 11613, 11813, 14613, 14813, 15613, 15813 Series.
RT-11615, 11715, 14615, 14715, 15715 Series.

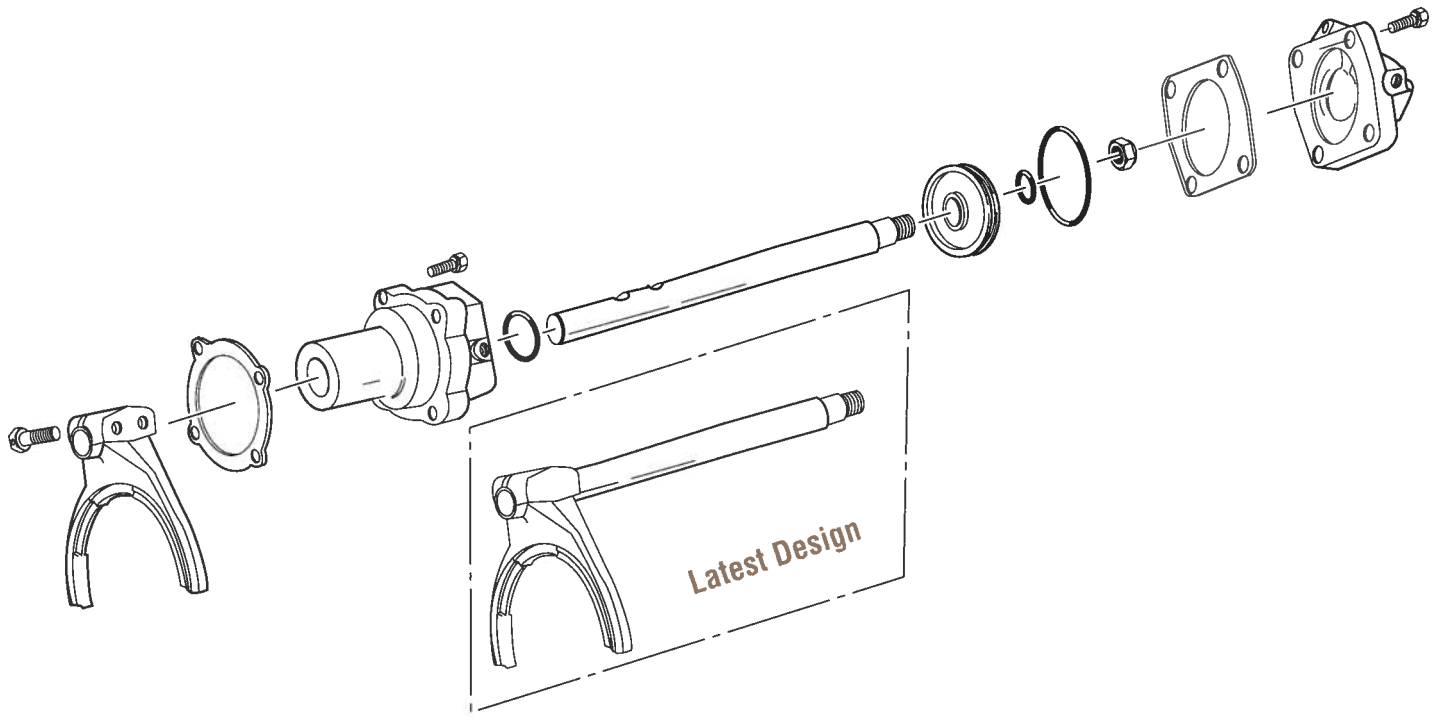

Model Application	Part Number
Intermediate Cylinder Kit RT-613, 6613 Series.	K-1434
Range Cylinder Kit RT-906, 9508, 11608, 14608, 8608L, 9509, 11609, 12509, 12609, 12709, 13609, 13709, 14609, 14709, 16709, 910, 1110, 12510, 11610, 11710, 12510, 12610, 12710, 13710, 14610, 14710, 15710, 16710 Series. RTO-1157DL, 11607L.	K-1431
Range Cylinder Kit RT-9513, 11613, 11813, 12513, 14613, 14813, 15613, 15813 Series. RT-915, 11615, 14615 Series. RTO-958LL, 1157DLL, 7608LL, 11607LL, 11608LL, 1258LL and 14608LL.	K-1432
Range Cylinder Kit RT-6609, 8609, 610, 6610 Series.	K-1433
Range Cylinder Kit RT-9109, 11109, 12109, 13109, 14109 Series.	K-2831
Range Cylinder Kit RTO-11709MLL, 13707DLL/MLL, 14709MLL Series.	K-2853
Range Cylinder Kit RTLO-12713, 14713, 16713, 14718, 16718, 18718.	K-2809

Air Cylinder Replacement Kits

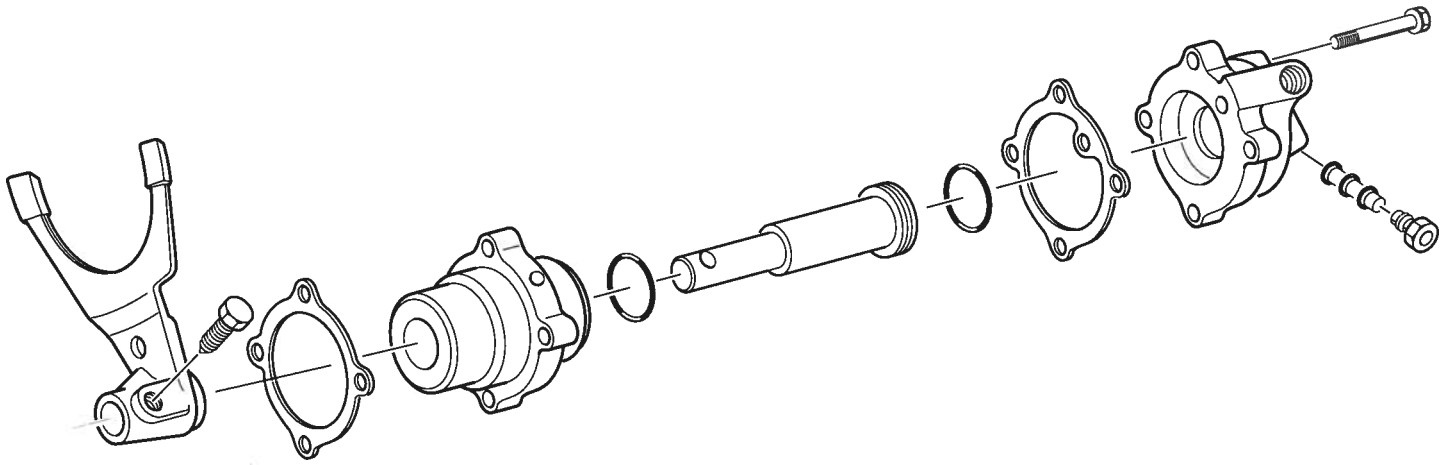

Model Application	Part Number
Range Cylinder/Yoke Update Kit RT/RTO-613, 9509, 910.	K-2751
Range Cylinder/Yoke Update Kit RT/RTO-9513, 12513, 915.	K-2749
Reduction Cylinder Kit w/17070 Cylinder RT-915, 11615 Series. RTO-958LL, 11608LL, T-955 All.	K-1011
Reduction Cylinder Kit w/21210 Cylinder RT-7608LL, RTO-11608LL, RT/RTO-11615 New Design.	K-2107
Reduction Cylinder Kit RTO-11607LL, 14608LL and RT-14615 Series.	K-1797
Splitter Cylinder Kit w/17070 Cylinder RT-913, 9513, 11613, 11813, 12513, 14613, 14813, 15613, 15813 Series.	K-1010
Splitter Cylinder Kit w/21210 Cylinder RT-9513, 11613, 11813, 12513, 14613, 14813, 15613, 15813 Series.	K-1957
Splitter Cylinder Kit RTO-15618.	K-2070
Splitter Cylinder Kit RTLO-14613, 16713.	K-2409

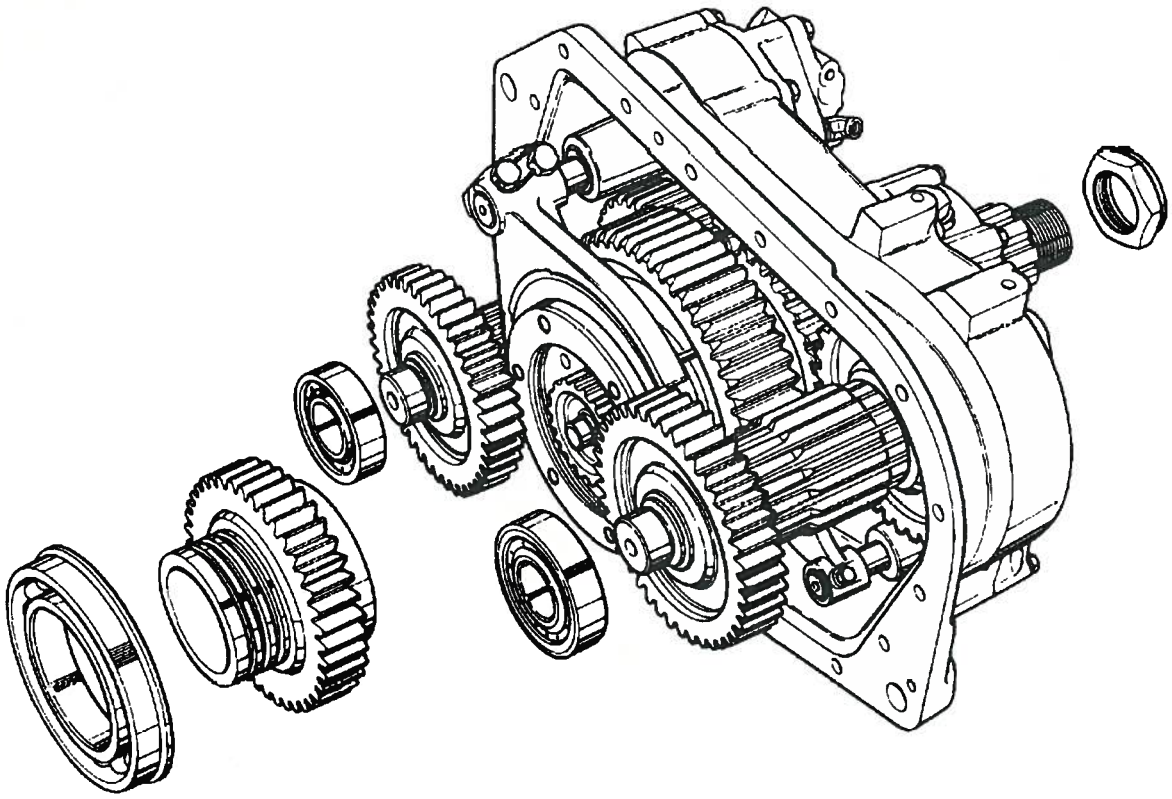

Combine Fuller Transmission New Generation technology with your present transmission for a new dimension of quiet, efficient performance.

Now, you can upgrade and improve the performance of your Old Generation Transmission without paying the high cost of downtime or rebuilding. Simply replace the old auxiliary section with a new auxiliary section assembly, with quiet, cost-efficient New Generation Transmission technology.

A cost-effective way to upgrade your transmission

Auxiliary Range Section Assemblies

8 Speeds	Part Number
RT-9508 Series	S-1459
RTO-1157DL	S-1466
RTO-11607L	S-1395
RT-11608 Series	S-1386
RT-14608 Series	S-1391

9 Speeds	Part Number
RT-6609 Series	S-1456
RT-8608L Series	S-1386
RT-8609 Series	S-1456
RT/RTO-9509A	S-1460
RTO-9509B	S-1461
RTO-1157DLL	S-1467
RT-11509 Series	S-1464
RTO-11607LL	S-1396
RTO-11707LL Series	S-1554
RT/RTO-11609A	S-1385
RT/RTO-11609B, P, R	S-1386
RT/RTO-11709A	S-1741
RT/RTO-11709B	S-1742
RT-11709H	S-1743
RTO-11709H	S-1744
RT/RTO-12509 Series	S-1468
RT/RTO-12609A	S-1401
RTX-12609B, P, R	S-2104
RT/RTO-12709A	S-1775
RTO-12709B	S-1776
RT-12709H	S-1777
RTO-12709H	S-1778
RT/RTX-13609A	S-2099
RTX-13609B, P, R	S-1944
RTO-13707MLL	S-2214
RT-13709H	S-1896

9 Speeds Continued	Part Number
RTX-13709H	S-1897
RT/RTO-14609A	S-1390
RTO-14609B	S-1391
RT/RTO-14709A	S-1766
RTO-14709B	S-1767
RT-14709H	S-1768
RTX-14709H	S-1769
RTX-16709	S-1901

10 Speeds	Part Number
RT/RTO-910 Series	S-1458
RTO-958LL Series	S-1463
RT/RTO-1110 Series	S-1465
RTO-11608LL Series	S-1397
RTO-11708LL Series	S-1555
RT/RTO-11610 Series	S-1398
RTLO-11610B Series	S-2133
RT/RTX-11710B	S-1929
RT/RTX-11710C	S-1935
RTO-1258LL Series	S-1470
RT/RTO-12510 Series	S-1469
RT/RTO-12610 Series	S-1402
RTLO-12610B Series	S-2135
RT/RTX-12710B	S-1937
RT/RTX-12710C	S-1939
RTLO-13610B Series	S-2139
RT/RTX-13710B	S-1931
RT/RTX-13710C	S-1933
RTO-14608LL Series	S-1400
RTO-14708LL Series	S-1557
RT/RTO-14610 Series	S-1395
RTLO-14610A	S-1790
RTLO-14610B	S-2112
RT/RTX-14710B	S-1818
RT/RTX-14710C	S-1941

10 Speeds Continued	Part Number
RTLO-15610B	S-2144
RTLO-16610B	S-2146
RTX-16710B	S-2045
RTX-16710C	S-2047

11 Speeds	Part Number
RTO-11709MLL	S-2218
RTO-14709MLL	S-2216

13 Speeds	Part Number
RT-9513	S-1450
RTO-9513	S-1451
RTOO-9513	S-1473
RT-11613	S-1387
RTO-11613	S-1388
RTO-11613 with Tapered Bearings	S-2361
RTOO-11613	S-1389
RT-12513	S-1452
RTO-12513	S-1453
RTLO-12713A	S-2168
RT-14613	S-1392
RT-14613 with Tapered Bearings	S-1962
RTO-14613	S-1393
RTO-14613 with Tapered Bearings	S-1960
RTO-14813	S-2023
RTO-14813 with Tapered Bearings	S-2025
RTOO-14613	S-1394
RTOO-14813 with Tapered Bearings	S-2007
RTLO-14613B	S-1948
RTLO-14713A	S-2170
RT-15613	S-1454
RTO-15613	S-1455
RTO-15613 with Tapered Bearings	S-2262
RTLO-16713A	S-2172

15 Speeds	Part Number
RT/RTO-915 Series	S-1462
RT/RTO-11615 Series	S-1399
RT/RTO-11715 Series	S-1556
RT/RTO-12515 Series	S-1472
RT/RTO-14615 Series	S-1396
RT/RTO-14715 Series	S-1554
RT/RTO-15615 Series	S-1471
RT/RTO-15715 Series	S-1554

18 Speeds	Part Number
RT/RTO-15618 Series	S-1562
RTLO-14618A	S-1892
RTLO-14718B	S-2176
RTLO-16618A	S-1893
RTLO-16718B	S-2174
RTLO-18718B	S-2267

Automated Models

9 Speeds	Part Number
RT/RTO-9109A-AT, RT-11109A-ATR	S-2187
RTO-9109B-AT, RTO-11109B-ATR	S-2189
RT/RTO-11109A-AT/ATS	S-2181
RT/RTO-11109B-AT/ATS	S-2183
RTO-11109B-ATE	S-2185
RT/RTO-12109A-AT	S-2191
RTO-12109B-AT	S-2193
RTO-13109B-AT	S-2197
RTO-13109, 14109A-ATE	S-2199
RTO-13109, 14109B-ATE	S-2195
RT/RTO-14109A-AT/ATS	S-2201
RTO-14109B-AT/ATS	S-2203
RTO-16109A-ATE	S-2339
RTO-16109B-ATE	S-2341
RTO-16109A-AT	S-2343
RTO-16109B-AT	S-2345

Automated Models Continued

10 Speeds	Part Number
RTAO-11710B-AC	S-2222
RTAO-11710C-AC	S-2224
RTAO-12710B-AC	S-2226
RTAO-12710C-AC	S-2228
RTAO-13710B-AC	S-2230
RTAO-13710C-AC	S-2232
RTAO-14710B-AS	S-2234
RTAO-14710B-AC	S-2234
RTAO-14710C-AS	S-2236
RTAO-14710C-AC	S-2236
RTAO-15710B/16710B-AC	S-2238
RTAO-15710C/16710C-AC	S-2240

18 Speeds	Part Number
RTLO-9118A/11118A-MT	S-2277

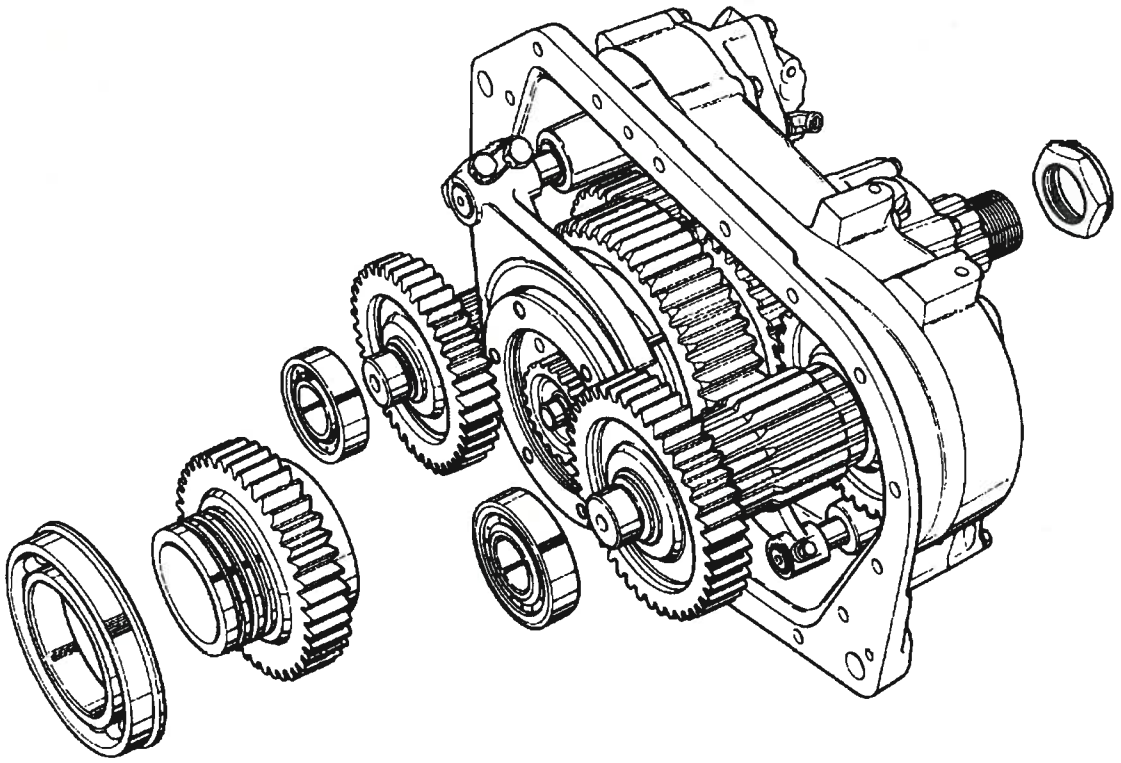

- Sell more used trucks. Make a used fleet truck appeal to a second owner.
- Take advantage of 9-speed versatility with easy conversion to a 13-speed.

Target Customers

- Will help Truck Dealers sell good used trucks.
- Satisfy Fleet and Owner-Operator conversion requirements.

Features

- Brand new Auxiliary Section with all the latest engineering improvements:
  - — Updated Splitter Section and Cylinder
  - — New Synchronizer Design
- All the parts needed for conversion including the Roadranger Valve, Tubing, And Shift Decal.
- Plus step-by-step Installation and Driver Instructions.

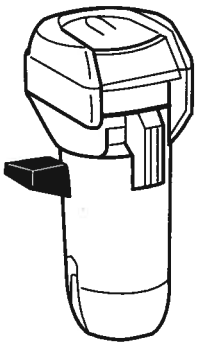

Advantages

- Not necessary to buy and/or replace the complete transmission.
  - — Conversion can be done in the chasis.
  - — Just change the Auxiliary Section, shorten the drive shaft, and install Roadranger Valve.
- Total cost is less than buying a new or rebuilt transmission.

Benefits

- Increased fuel economy under the proper operating conditions and procedures.
- Extended transmission life with a new Auxiliary Section.
- A more desirable transmission for the Owner-Operator.
- A more salable used truck.

9 Speed to 13 Speed Conversion Kits

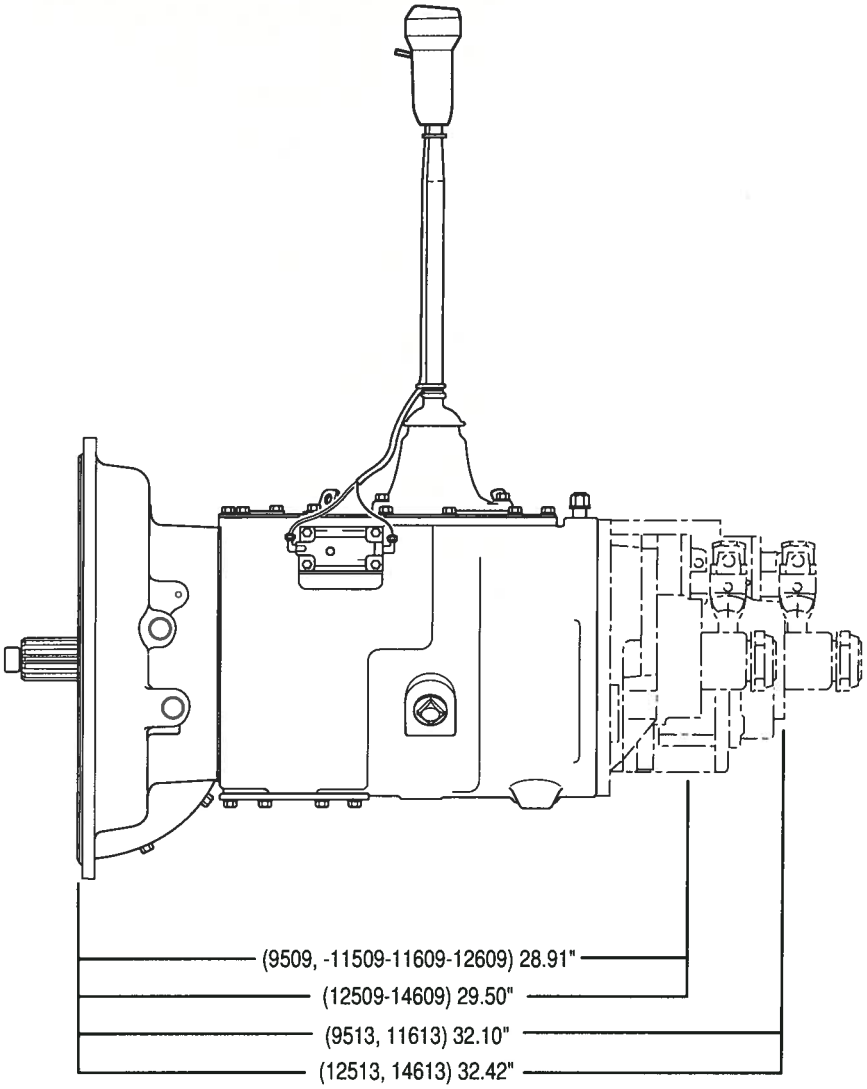

Typical Overdrive 13-Speed

Gear	Ratio	% Step
80D	.87	
		15%
8DIR	1.00	
		17%
70D	1.17	
		15%
7DIR	1.34	
		19%
60D	1.60	
		15%
6DIR	1.83	
		17%
50D	2.15	
		15%
5DIR	2.46	
		37%
4	3.38	
		34%
3	4.54	
		36%
2	6.18	
		35%
1	8.32	
		51%
Low	12.56	
Hi Reverse	3.89	
Lo Reverse	13.13	

Typical Direct 9-Speed

Gear	Ratio	% Step
8	1.00	
		34%
7	1.34	
		36%
6	1.83	
		35%
5	2.46	
		38%
4	3.40	
		34%
3	4.57	
		36%
2	6.22	
		35%
1	8.38	
		51%
Low	12.65	
Hi Reverse	3.89	
Lo Reverse	13.22	

Conversion Chart

Current Transmission	Convert To	Kit Number
RT-9509A	RTO-9513	K-2031
RT-11509 RT-12509	RTO-12513	K-2032
RT-11609A RT-12609A	RTO-11613	K-2033
RT-14609A	RTO-14613	K-2034
RT-14609A	RT-14613	K-2040

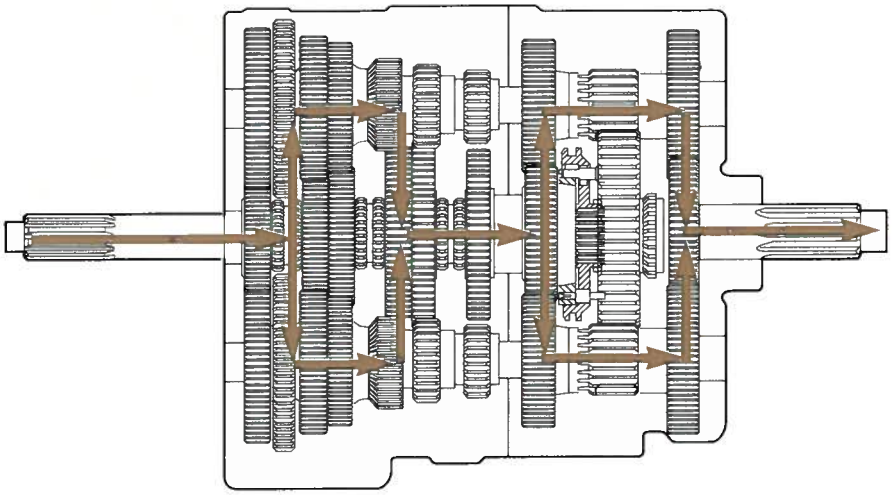

Splitter Blockout

The splitter section may be blocked out for nine speed operation. Refer to service bulletin #95 for instructions.

Splitter (9513-12513)

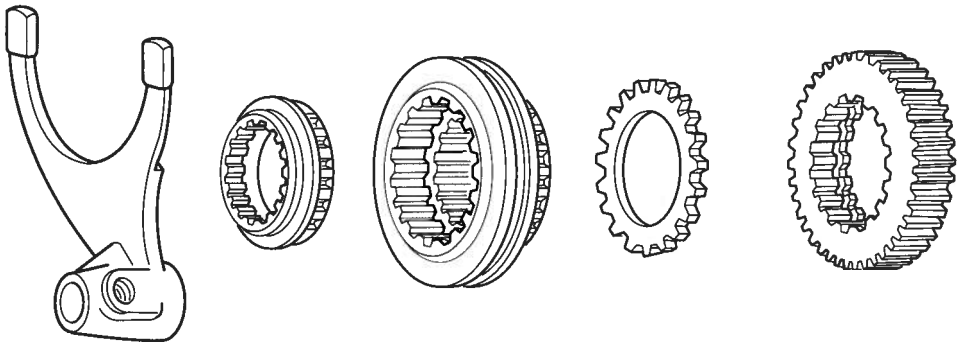

Splitter (11613-14613-15613)

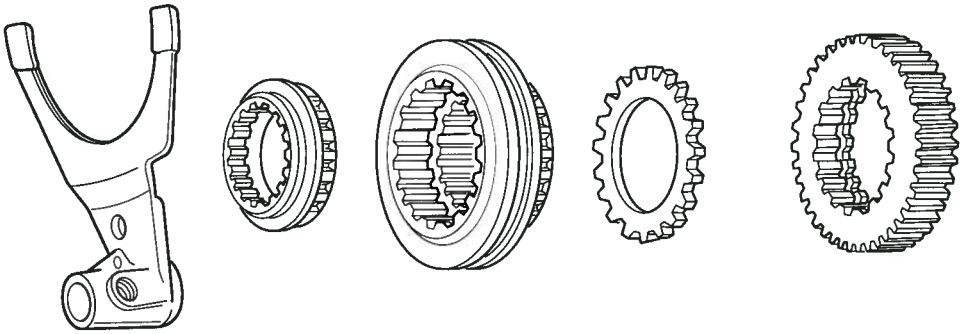

Model Series Application	Part Number
RTO/RTOO-9513	K-2027
RT-9513	K-2026
RTO-12513	K-2025
RT-12513	K-2024

Model Series Application	Part Number
RT-11613	K-1959
RTO/RTOO-11613, 11813	K-1960
RT-14613, 15613	K-1961
RTO/RTOO-14613, 14813	K-1962
RTO-15613, 15813	K-1962

Splitter Parts Combinations

MODELS	Gears					Couplers								Yokes	
		RTO/ RTOO	RT	RT	RTO/ RTOO	9513	RT/RTO 12513	RTO 9513	RTO 12513	RT 9513	RT 12513	9513	11600 12600 14600 15600		
CLUTCHES	16309 Repl. by 16593 S	16593 S	16869 S	17909 H	18994 H	15418 Repl. by 18192 S	15938 S	17911 H	17914 H	18192 S	18193 S	19129 EH	19131 EH	17059	19128
9513 15503 (Repl. by K-1461)	X	X	X			X				X				X	
12513 15959	X	X	X				X				X			X	
9513 16258	X	X	X			X				X				X	
RT9313 17908				X	X	X				X				X	
RTO-RTOO 9513 17910	X	X	X					X						X	
12513 17912				X	X		X				X			X	
12513 17913	X	X	X						X					X	
9513 18995				X	X			X						X	
12513 18996				X	X				X					X	
11600, 12600, 14600 15600, 19132 N				X	X								X		X
9513 19784 N				X	X							X			X

N=New generation update
S=Straight cuts clutching teeth

EH=External clutching teeth, new generation
H=Helix cut clutching teeth

Helix Clutching Teeth

M/S OD/4th Update

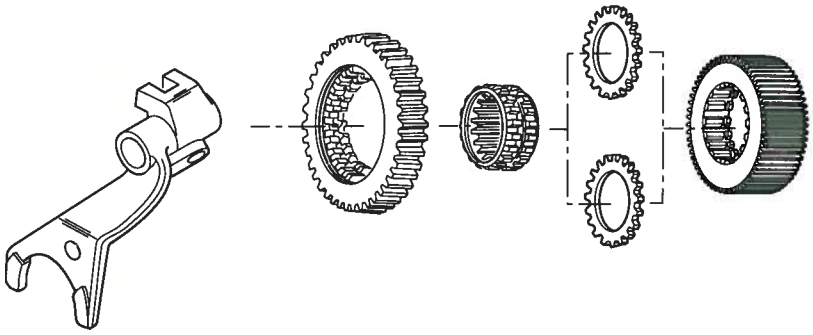

Model Application	Part Number
RT-610, 613	K-1670
RTO-610, 613	K-1671
M/S OD/4th Update	
RT-6610, 6613	K-2018
RTO-6610, 6613	K-2019
RT-8609 (Drive Set)	K-2065

New Stronger Synchronizers

- Low Range Larger Pins
- High Range New Castings
- Requires New Sliding Clutch

For all but 610-6610-6609-8609 Series

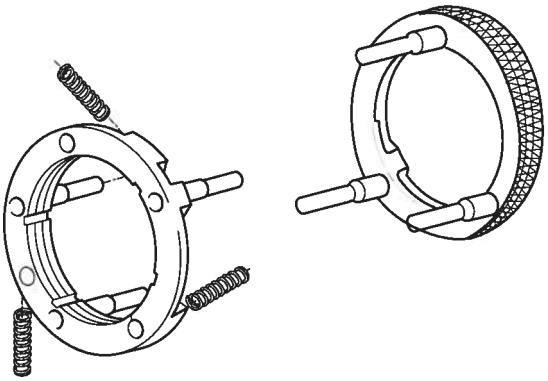

Model Application	Part Number	Description
610-6610-6609-8609 Series	K-2444	
613-6613-906-9508-909-9509-910 913-9513-915-1110-1157-11509-12509 12510-1213-12513-12515-11607-11608-11609 11610-11613-11615-12609-12610-14608 14609-14610-14613-14615-15613-15615 958LL-11608LL-1258LL-14608LL Series Containing Low and High Range Synchronizers and Synchronizer Springs.	K-2445	Use with 16716 or 16759 Sliding Clutch (Replaces K-1654)
All Roadranger Models Listed Below	K-2446	Use with 20323 or 20336 Sliding Clutch
613-906-9508-909-9509-910 913-9513-915-1110-11509-958 Series	K-2447	Also contains 20336 Sliding Clutch (Replaces 16716)
11608-14608-8608L-1157-11609-11607LL 11707LL-11709-12509-12609-12709-13707DLL/MLL 13609-13709-14609-14709-16709-7608LL-11610 11608LL-11708LL-11710-1258LL-12610-12710 13610-13710-14608LL-14708LL-14610-14710 15610-15710-16610-16710-11709MLL-14709MLL 6613-11613-11813-12513-14613-14813-15613 15813-11615-11715-12515-14615-14715-15615 15715-14618-15618-16618 Containing Low and High Range Synchronizers and Synchronizer Springs.	K-2448	Also Contains 20323 Sliding Clutch (Replaces 16759)
9109-11109-12109-13109-14109-16109 Containing Low and High Range Synchronizers and Synchronizer Springs.	K-2974	Also Contains 22915 Sliding Clutch
14210C Containing Low and High Range Synchronizers and Synchronizer Springs.	K-2922	Also Contains 4300924 Sliding Clutch

5-Speed

Model	1st Rev	2nd-3rd	4th-5th
FS-4005	—	A-5693	A-5401
FS-4205	—	A-6137	A-6144
FS-5005	—	A-5693	A-5401
FS-5205	—	A-6137	A-6144
FS-6105	A-5542	A-5692	A-5693
FS-6205	—	A-6156	A-6137
FS-6305	—	A-6156	A-6137

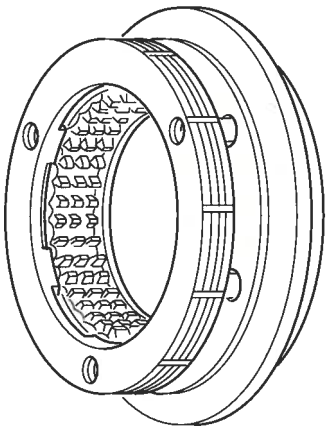

6-Speed

Model	1st-2nd	3rd-4th	5th-6th
FS-5106	A-5721	A-5692	A-5693
FS-5306	A-6135	A-6156	A-6137
FS-6106	A-6150	A-6151	A-6152
FS-6206	A-5721	A-5692	A-5693
FS-6306	A-6135	A-6136	A-6137
FS-7206	A-5723	A-5724	A-5999
FS-8206	A-5723	A-5724	A-5726

Rear Bearing Covers — Mid Range

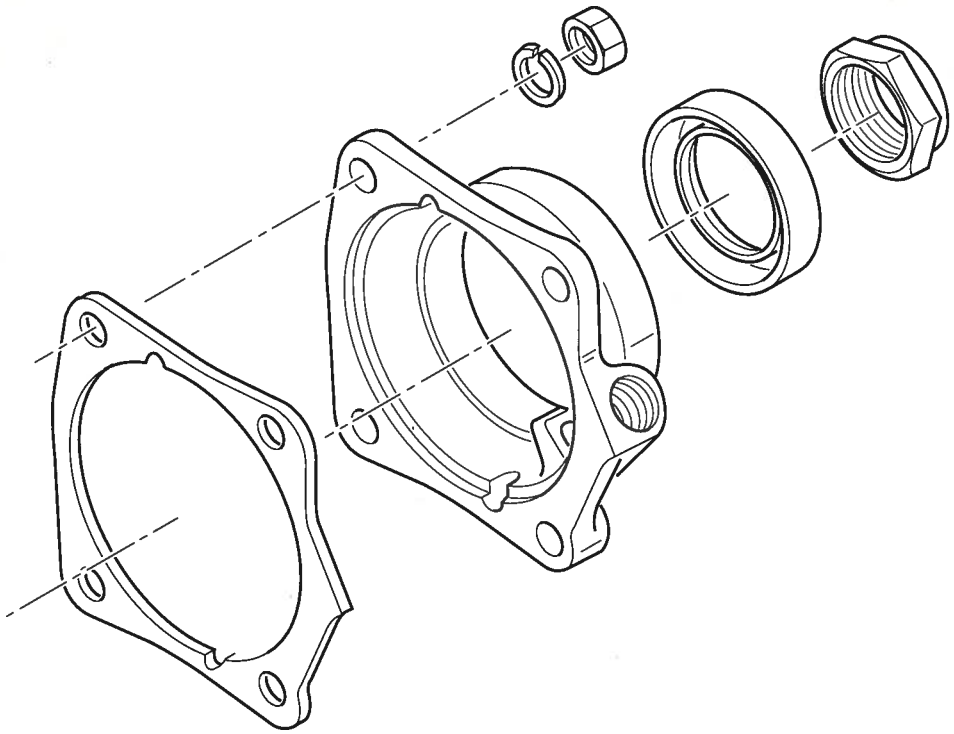

Model Series	Part Number	Service Brg. Cover No.	Speedo Type	Speedo Position	Brake	Output Shaft Dia.
FS-4005/4205	4300846	4300846	MECH.-L.H.	9:00		1.75
	4300849	4300849	MECH.-L.H.	9:00	9X3	1.75
	4300877	4300877	MECH.-L.H.	9:00	9X3	1.75
	4300970	4300970	MECH.-L.H.	9:00	9X3	1.75
	4300972	4300972	MECH.-L.H.	9:00		1.75
	4301053	4301053	MECH.-L.H.	9:00	9X3	1.75
	4301985	4301985	MAG.	8:30	12X4	1.75
	4302614	K-7038	MAG.	12:30		1.75
	4302615	K-7039	MAG.	8:30	9X3	1.75
	4302037	S-7030	MAG.	12:30		1.75
	4302039	S-7031	MAG.	8:30	9X3	1.75

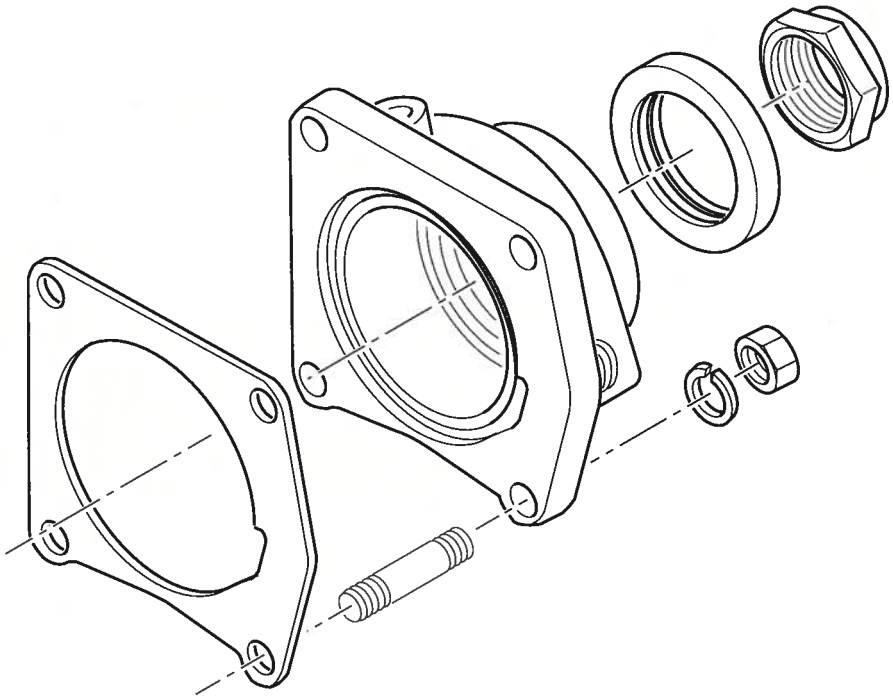

Model Series	Part Number	Service Brg. Cover No.	Speedo Type	Speedo Position	Output Brake	Shaft Dia.
FS-5005/5205	23706	23706	MECH.-L.H.	9:00		1.96
	23709	23709	MECH.-L.H.	9:00	10X2.5	1.96
	235636	235636	MECH.-R.H.	12:00		1.75/1.96
	240972	240972	MECH.-L.H.	9:00	12X4	1.96
	240973	240973	MECH.-L.H.	9:00		1.96
	241705	241705	MECH.-L.H.	9:00		1.96
	3316426	3316426	MECH.-L.H.	9:00		1.96
	4302616	K-7040	MAG.	8:30	12X4	1.96
	4302617	K-7041	MAG.	8:30	12X3	1.96
	4302618	K-7042	MAG.	8:30		1.96
	4301986	S-7032	MAG.	8:30		1.96
	4302023	S-7033	MAG.	8:30	12X3	1.96
	4302000	S-7034	MAG.	12:30	12X4	1.96

Rear Bearing Covers — Mid Range

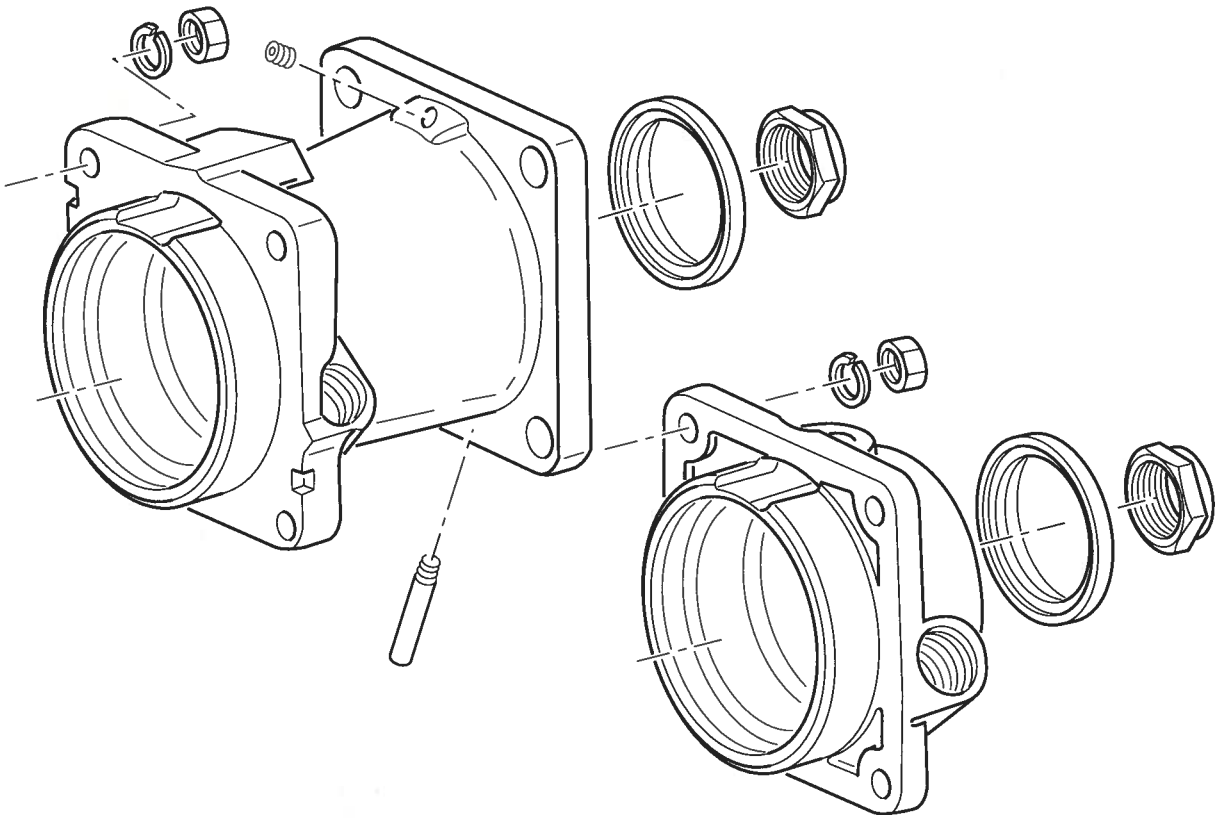

Model Series	Number	Part Cover No.	Service Brg. Type	Speedo Position	Speedo Brake	Output Shaft Dia.
FS-6005/6105/6205/6305						
5106/6206/5306/6306	21901	21901	MECH-L.H.	9:00	12X4	1.95
	21947	21947	MECH-L.H.	9:00	12X3	1.95
	22022	22022	MECH-L.H.	9:00		1.95
	23713	23713	MECH-L.H.	9:00	10X2.5	1.95
	3316278	3316278	MECH-L.H.	9:00		1.95
	4300526	4300526	MECH-L.H.	9:00	10X2.5	2.3
	4301987	S-7035	MAG.	8:30	12X4	1.95
	4302005	S-7036	MAG.	8:30	12X3	1.95
	4302029	S-7037	MAG.	12:30		1.95
	4302100	S-7038	MAG.	12:30		1.95
	4302619	K-7043	MAG.	8:30	12X4	1.95
	4302620	K-7044	MAG.	8:30	12X3	1.95
	4302621	K-7045	MAG.	12:30		1.95

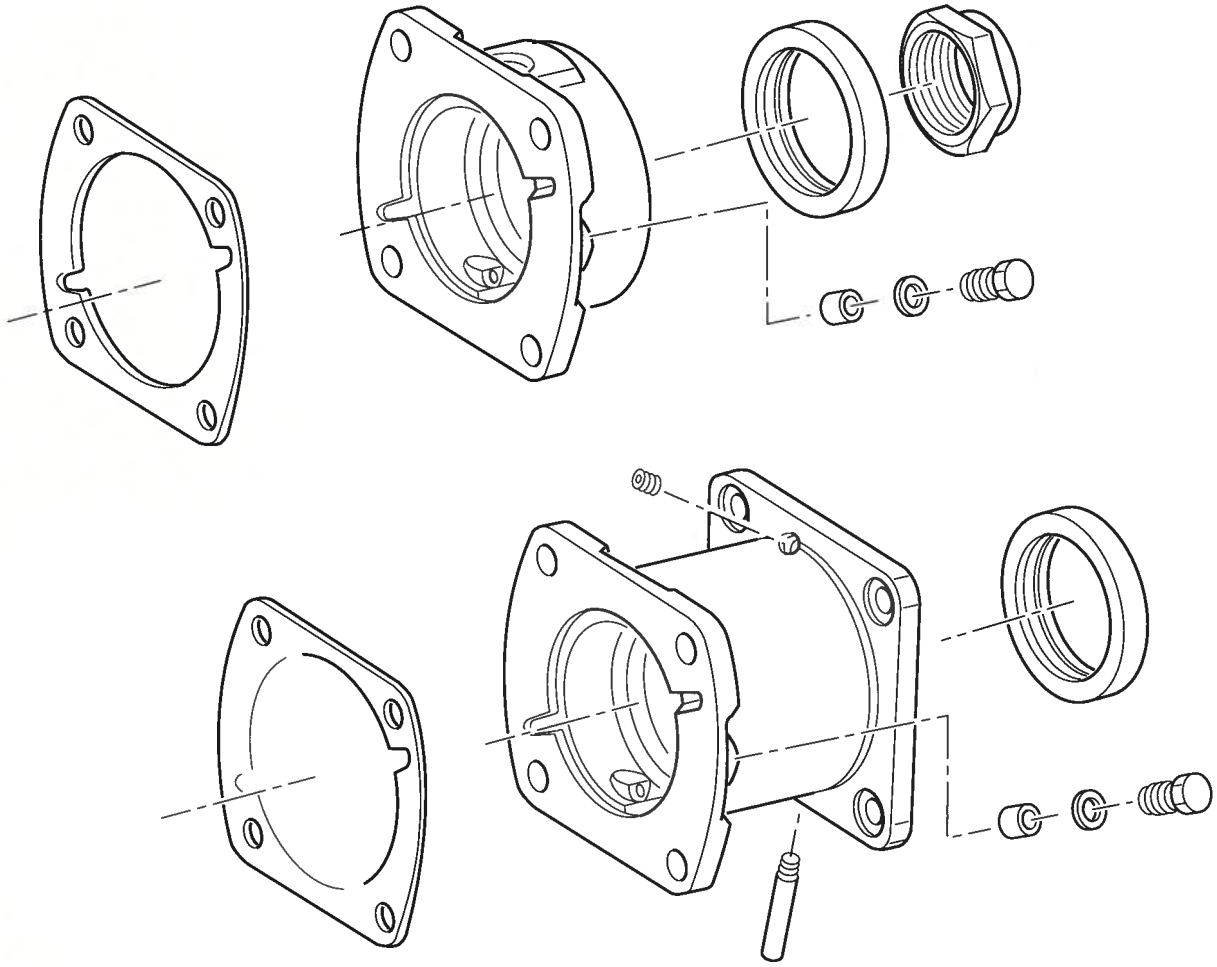

FS-6106

Part Number	Service Brg. Cover No.	Speedometer Type	Speedometer Location	Brake
20653	K-1964	Mechanical	9:00	—
20970	K-2797	Magnetic	12:00	—
20977	K-1966	Mechanical	9:00	12x4
22117	S-1619	Mechanical	9:00	12x3
22118	S-1620	Magnetic	8:30	12x3
23249	A-5565	Magnetic	9:00	12x4

Rear Bearing Covers — Mid Range

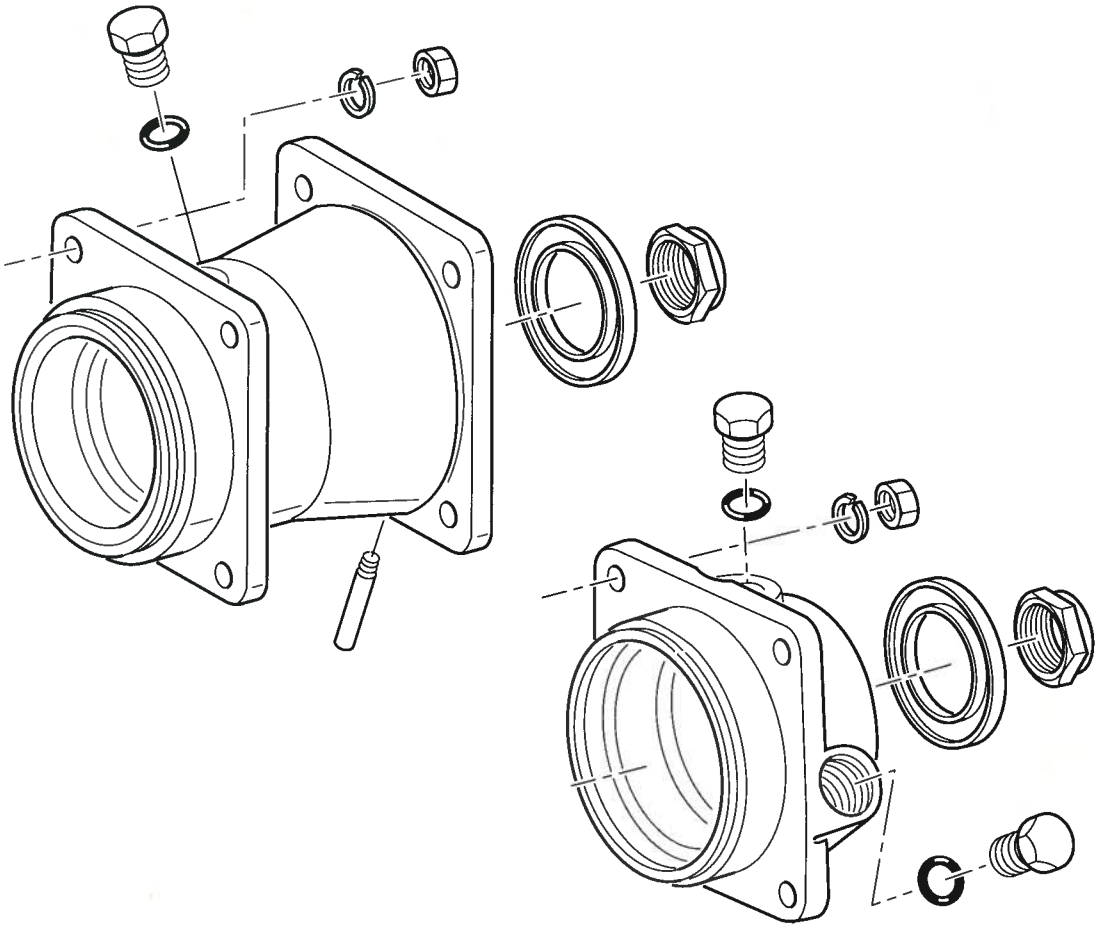

Model Series	Part Number	Service Brg. Cover No.	Speedo Type	Speedo Position	Brake	Output Shaft Dia.
FS-7206	22325	S-7039	MAG/MECH	12:30/9:00		1.95
	23336	S-7042	MAG	12:30	12x3	1.95
	4300784	S-7040	MAG	12:30		1.95
	4302014	S-7039	MAG/MECH	12:30/9:00		1.95
	4302022	S-7042	MAG	12:30	12x3	1.95
	4302035	S-7040	MAG	12:30		1.95
	4302347	S-7041	MAG	12:30		1.95
	4302622	K-7046	MAG	12:30		1.95
	4302623	K-7047	MAG	12:30	12x3	1.95

Model Series	Part Number	Service Brg. Cover No.	Speedo Type	Speedo Position	Brake	Output Shaft Dia.
FS-8206	4300098	4300098	MECH.-L.H.	9:00	12x3	2.3
	4302019	S-7043	MAG-MECH	12:30/9:00		2.3
	4302352	S-7044	MAG	12:30		2.3
	4302624	K-7048	MAG	12:30		2.3

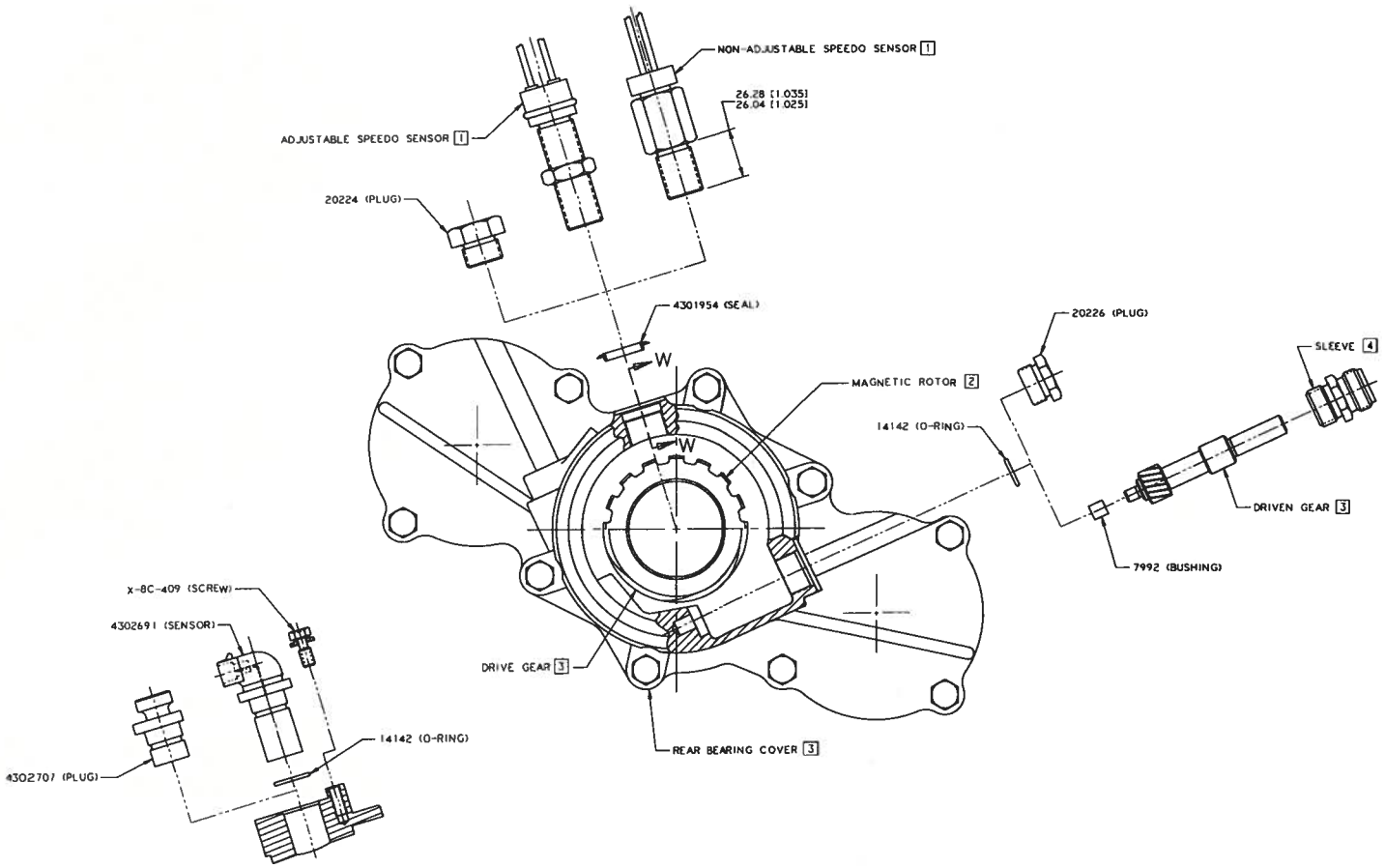

Note for magnetic sensor application consult O.E.M. or Speedo Manufacturer

Rear Bearing Cover Clock Position

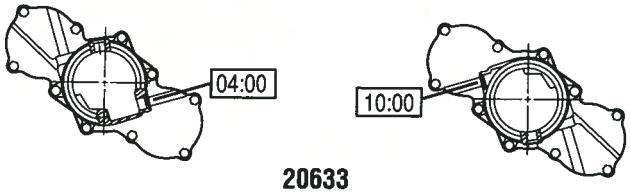

20633
(1) Mechanical Right Side

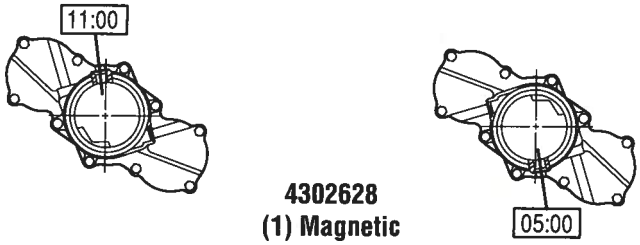

4302628
(1) Magnetic

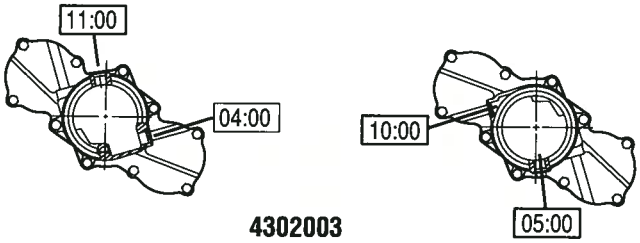

4302003
21762
(1) Mechanical
(1) Magnetic

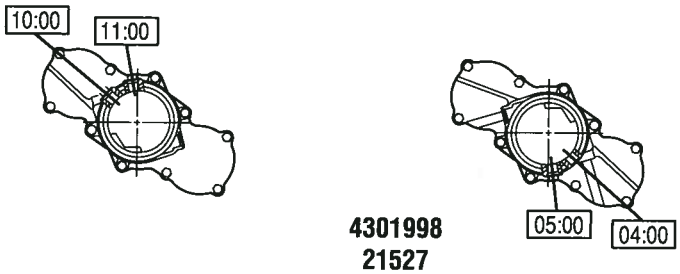

4301998
21527
(1) Magnetic

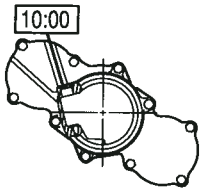

20810
(1) Mechanical Left Side

This cover-20810-may be rotated if cover has cast notches on both sides.

NOTE: This cover uses left hand speedometer gears.

Model Series	Speedo Location	Production Threaded Sensor Brg. Cover	Service Threaded Sensor Brg. Cover	Production Push In Sensor Brg. Cover	Service Push In Sensor Brg. Cover
RT-6609 RT-6610 RT-8609	(1) Mechanical Left Side	20810	K-1937		
	(1) Mechanical Right Side	20633	S-2148		
	(1) Mechanical Right Side (1) Magnetic	4302003 21762	S-2148		
	(2) Magnetic	4301998 21527	S-2148	4302627	S-2373
	(1) Magnetic			4302628	S-2373

Rear Bearing Cover Clock Position

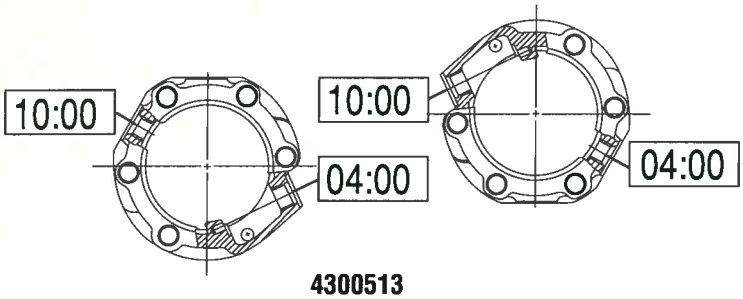

4300513
21639
(1) Magnetic (1) Mechanical

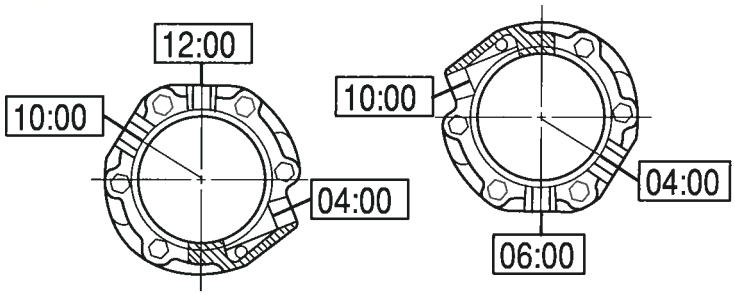

4302033
4302001
21640
(2) Magnetic (1) Mechanical

All Covers May Also Be Installed 180° From Position Shown

Model Series	Speedo Type and Location	Production Threaded Sensor Brg. Cover	Service Threaded Sensor Brg. Cover	Production Push In Sensor Brg. Cover	Service Push In Sensor Brg. Cover
T-905 T-11605	(1) Magnetic 60° from top and (1) Mechanical Standard	21639 4300513	S-2155		
	(2) Magnetic Top of cover and 60° from Top (1) Mechanical Standard	4302001 4302033 21640	S-2155		

Rear Bearing Cover Clock Position

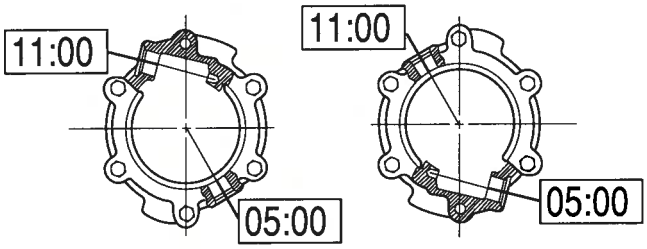

T8607
(1) Magnetic (1) Mechanical

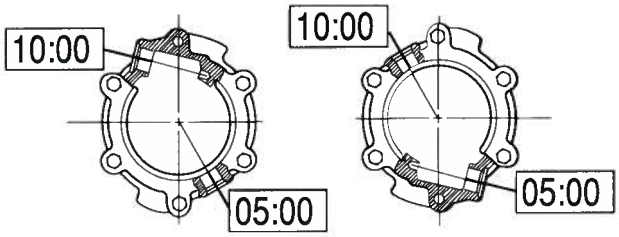

T11607-T14607
(1) Magnetic (1) Mechanical

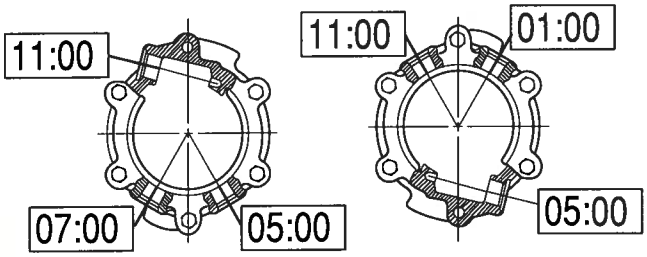

T11607-T14607
(2) Magnetic (1) Mechanical

Model Series	Speedo Type and Location	Production Threaded Sensor Brg. Cover	Service Threaded Sensor Brg. Cover	Production Push In Sensor Brg. Cover	Service Push In Sensor Brg. Cover
T-8607	(1) Magnetic 60° from top (1) Mechanical	22049 4302011 20986	S-2147		
	(1) Magnetic 60° from top			4302570	S-2359
T-11607 T-14607	(1) Magnetic (1) Mechanical	22742 4302018 20816	S-2142		
	(2) Magnetic			4302586	S-2358
	(2) Magnetic (1) Mechanical	22050 21678 4302012	S-2142		
	(1) Magnetic			4302587	S-2358

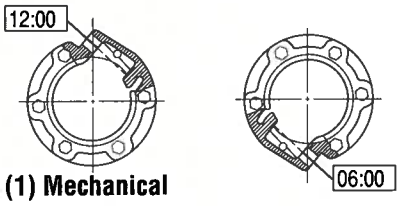

(1) Mechanical

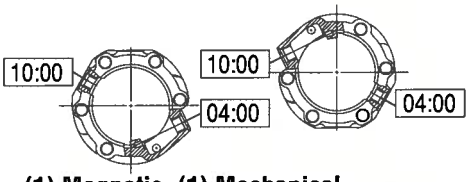

(1) Magnetic (1) Mechanical

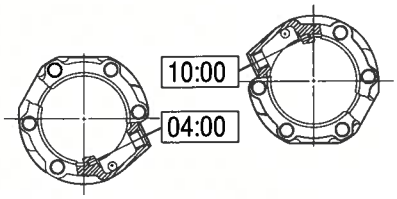

(1) Mechanical

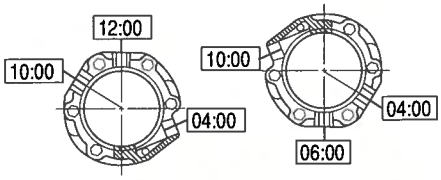

(2) Magnetic (1) Mechanical

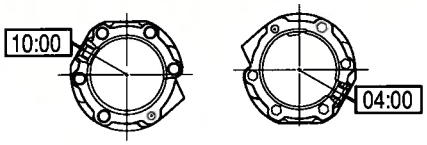

(1) Magnetic

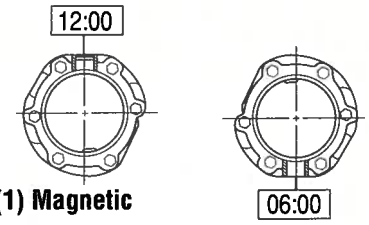

(1) Magnetic

Model Series	Speedo Type and Location	Production Threaded Sensor Brg. Cover	Service Threaded Sensor Brg. Cover	Production Push In Sensor Brg. Cover	Service Push In Sensor Brg. Cover
RT-6613 RT-7608LL RT-8608L RT-11608 RTO-11608LL RTO-11708LL RT-11609 RT-12609 RT-13609 RT-11610 RT-12610 RT-11613 RT-11813 RT-11615 RT-11715 RTLO-11610 RTLO-12610 RTLO-13610	(1) Magnetic Top of Cover	4302004 21950 21062	S-2136	4302565	S-2351
	(2) Magentic Top and 60°	4300001 4302030	S-2136	4302566	S-2351
	(1) Mechanical Top 45°	22042 20812	S-2136		
	(1) Mechanical Standard	22038 20205	S-2136		
	(1) Magnetic 60° from top	22039 20206	S-2136	4302567	S-2351
	(1) Magnetic 60° from top (1) Mechanical Standard	4302006 20207 22040	S-2136		
	(2) Magnetic Top of Cover and 60° from top (1) Mechanical Standard	4302007 20208 22041	S-2136		

Rear Bearing Covers

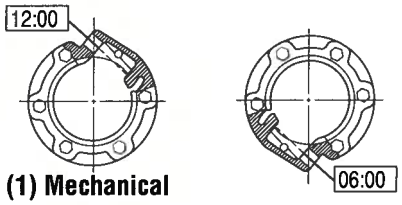

(1) Mechanical

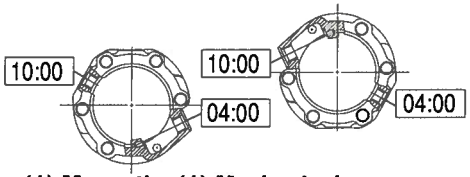

(1) Magnetic (1) Mechanical

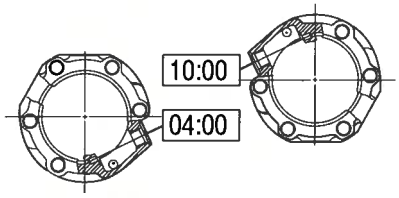

(1) Mechanical

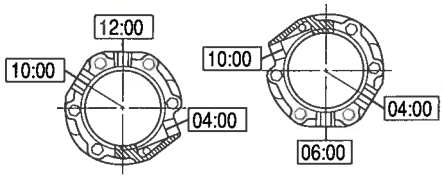

(2) Magnetic (1) Mechanical

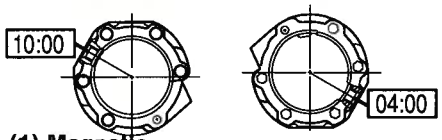

(1) Magnetic

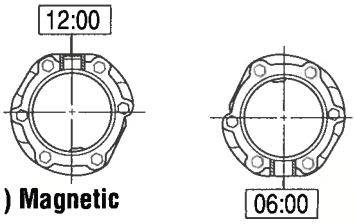

(1) Magnetic

Model Series	Speedo Type and Location	Production Threaded Sensor Brg. Cover	Service Threaded Sensor Brg. Cover	Production Push In Sensor Brg. Cover	Service Push In Sensor Brg. Cover
AT-1202 RTLO-9118-MT RTLO-11118-MT RTO-11/13109ATE RTO-14/16109ATE RT-11607L RTO-11607LL RT-12510 RTO-12513 RT-12515 RT-14608 RTO-14608LL RT-14609 RT-14610 RTLO-14610 RT-14/15613 RTLO-14613 RT-14615 RTO-15618 RTLO-14618 RTO-14/15813 RTLO-15/16610	(1) Magnetic Top of Cover	4302010 22048 20962	S-2119		
	(2) Magnetic Top and 60°	4300002 4302031	S-2119	4302575	S-2352
	(1) Mechanical Top 45°	22047	S-2119		
	(1) Mechanical Standard	22043 20220	S-2119		
	(1) Magnetic 60° from top	20221 22044	S-2119	4302574	S-2352
	(1) Magnetic 60° from top (1) Mechanical Standard	22045 4302008 20222	S-2119		
	(2) Magnetic Top of Cover and 60° from Top (1) Mechanical Standard	20223 4302009 22046 4301993	S-2119		

Rear Bearing Cover Clock Position

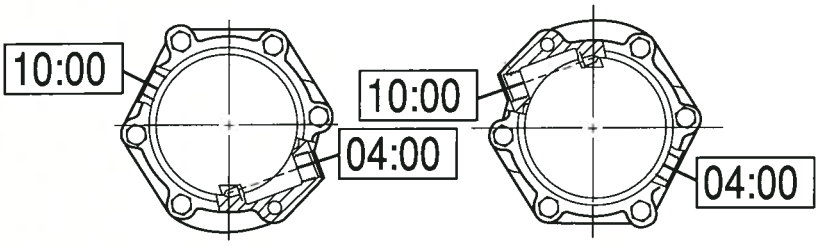

(1) Magnetic (1) Mechanical

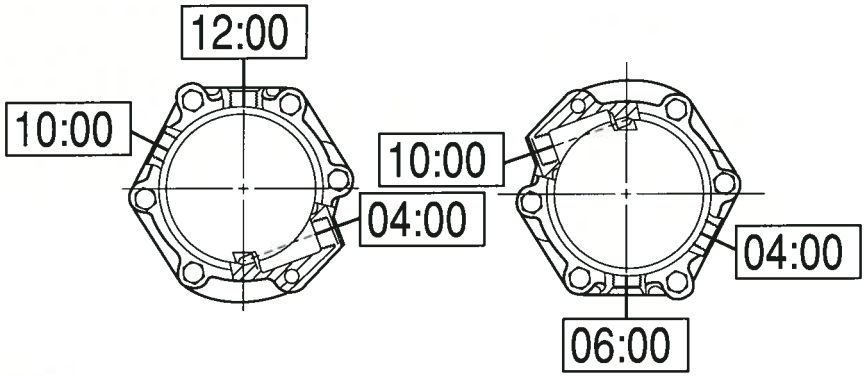

(2) Magnetic (1) Mechanical

11707LL/DLL, 11708LL, 11709, 11710, 11715, 12709, 12710, 12713, 13709, 13710, 13707LL/DLL/MLL, 14708LL, 11709MLL, 14709MLL, 14715, 15715

Model Series	Speedo Type and Location	Production Threaded Sensor Brg. Cover	Service Threaded Sensor Brg. Cover	Production Push In Sensor Brg. Cover	Service Push In Sensor Brg. Cover
RTO-11708LL RT-11709 RT-11710 RT-11715 RT-12709 RT-12710 RTLO-12713 RT-13709 RT-13710	(1) Magnetic 60° from top			4302572	S-2355
	(2) Magnetic Top of Cover and 60° from top	4302188	S-2106	4302571	S-2355
	(1) Magnetic 60° from top (1) Mechanical Standard	23368 4302025 22051	S-2106		
	(2) Magnetic Top of Cover and 60° from top (1) Mechanical Standard	22732 4302016	S-2106		

Rear Bearing Cover Clock Position

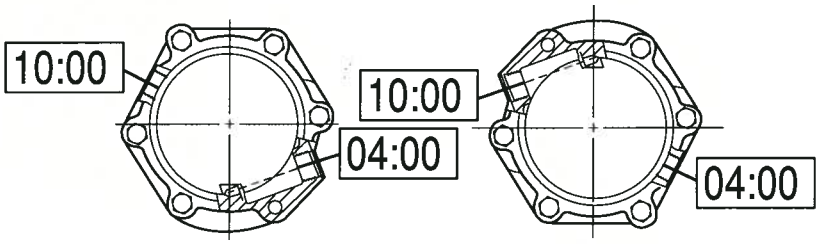

(1) Magnetic (1) Mechanical

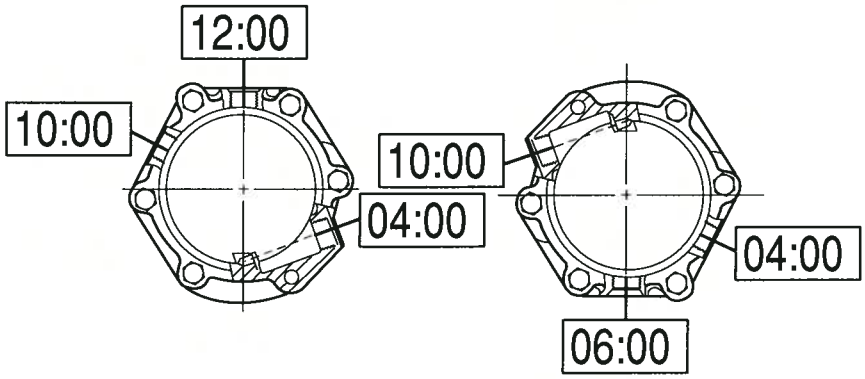

(2) Magnetic (1) Mechanical

11707LL/DLL, 11708LL, 11709, 11710, 11715, 12709, 12710, 12713, 13709, 13710, 13707LL/DILL/MLL, 14708LL, 11709MLL, 14709MLL, 14715, 15715

Model Series	Speedo Type and Location	Production Threaded Sensor Brg. Cover	Service Threaded Sensor Brg. Cover	Production Push In Sensor Brg. Cover	Service Push In Sensor Brg. Cover
RTO-11707LL RTO-11707DLL RTO-13707LL RTO-13707DLL RTO-13707MLL RTO-14708LL RTO-11709MLL RTO-14709MLL RT-14715 RT-15715	(1) Magnetic 60° from top			4302580	S-2353
	(2) Magnetic Top and 60° from top	4302190	S-2164	4302581	S-2353
	(1) Magnetic 60° from top (1) Mechanical Standard	4302026 23379 22052	S-2164		
	(2) Magnetic Top of Cover and 60° from top (1) Mechanical Standard	4302017 22733	S-2164		

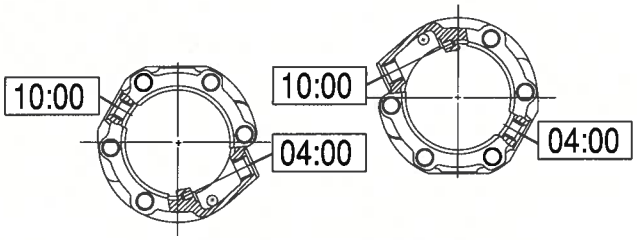

(1) Magnetic (1) Mechanical

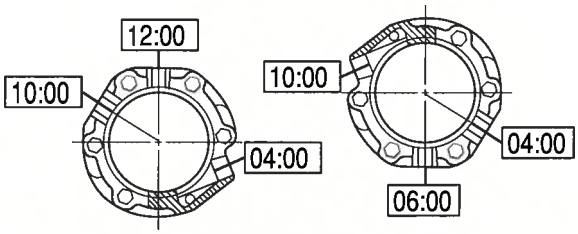

(2) Magnetic (1) Mechanical

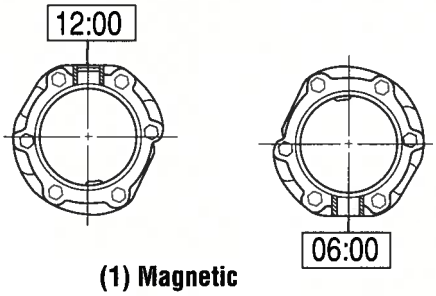

(1) Magnetic

Model Series	Speedo Type and Location	Production Threaded Sensor Brg. Cover	Service Threaded Sensor Brg. Cover	Production Push In Sensor Brg. Cover	Service Push In Sensor Brg. Cover
RT-14709 RT-14710 RTX-15710 RTX-16709 RTX-16710	(1) Magnetic 60° from top			4302588	S-2354
	(2) Magnetic Top of Cover and 60° from top	4302186	S-2159	4302589	S-2354
	(1) Magnetic 60° from top (1) Mechanical Standard	4302020 22968	S-2159		
	(2) Magnetic Top of Cover and 60° from top (1) Mechanical Standard	4302032 4300460	S-2159		

Rear Bearing Covers

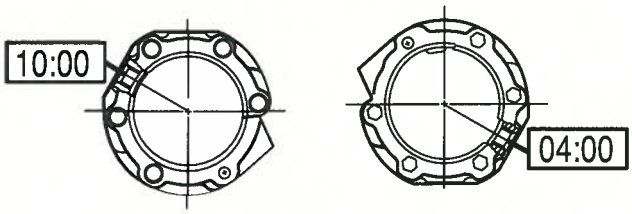

(1) Magnetic

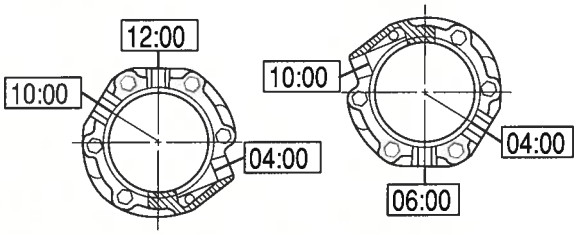

(2) Magnetic (1) Mechanical

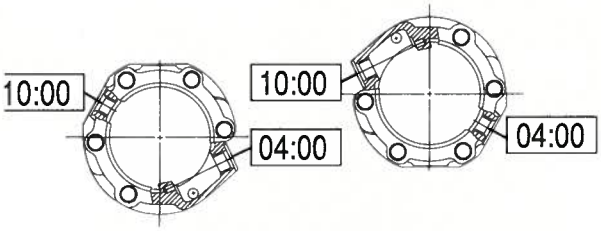

(1) Magnetic (1) Mechanical

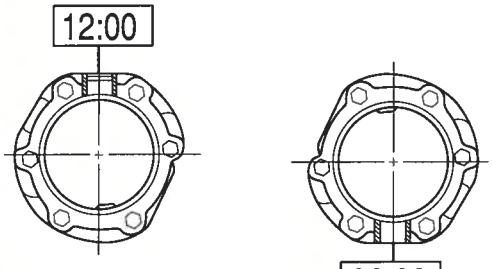

(1) Magnetic

Model Series	Speedo Location	Production Threaded Sensor Brg. Cover	Service Threaded Sensor Brg. Cover	Production Push In Sensor Brg. Cover	Service Push In Sensor Brg. Cover
RTLO-14713 RTLO-14718 RTLO-16713 RTLO-16718 RTLO-18718	(1) Magnetic 60° from top			4302580	S-2353
	(2) Magnetic Top of Cover 60° from top	4302359	S-2107	4302581	S-2353
	(1) Magnetic 60° from top (1) Mechanical Standard	4300892	S-2107		
	(2) Magnetic Top of Cover 60° from top (1) Mechanical Standard	4302341	S-2107		

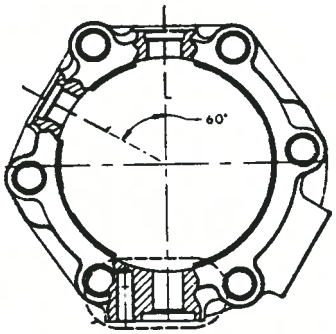

(2) Magnetic - Top & 60° From Top
(1) Magnetic - Bottom
Autoselect & Autoshift

Model Series	Speedo Type and Location	Production Threaded Sensor Brg. Cover	Service Threaded Sensor Brg. Cover	Production Push In Sensor Brg. Cover	Service Push In Sensor Brg. Cover
RTAO-14710B-AC RTAO-14710B-AS RTAO-14710C-AC RTAO-15710B/C-AC RTAO-16710B/C-AC	(3) Magnetic Top of Cover 60° from top Bottom	4302036 4301359	S-1992		
RTAO-11710B/C-AC RTAO-12710B/C-AC RTAO-13710B/C-AC	(3) Magnetic Top of Cover 60° from top bottom	4302556	S-2257		

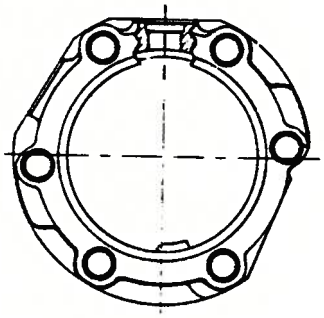

(1) Magnetic - Top

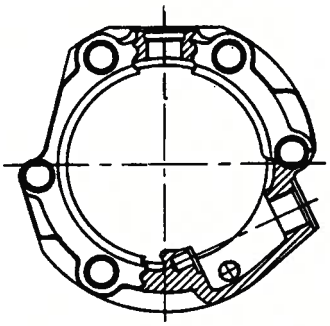

(1) Magnetic - Top
(1) Mechanical - Standard
(Clearance For
Power Synchronizer)

Model Series	Speedo Type and Location	Production Threaded Sensor Brg. Cover	Service Threaded Sensor Brg. Cover	Production Push In Sensor Brg. Cover	Service Push In Sensor Brg. Cover
RTO-11109-AT RTO-13109-AT RTO-14109-AT RTO-16109-AT	(1) Magnetic Top of Cover			4302578	S-2357
	(1) Magnetic Top of Cover (1) Mechanical Standard	4302027 23406	S-2113		

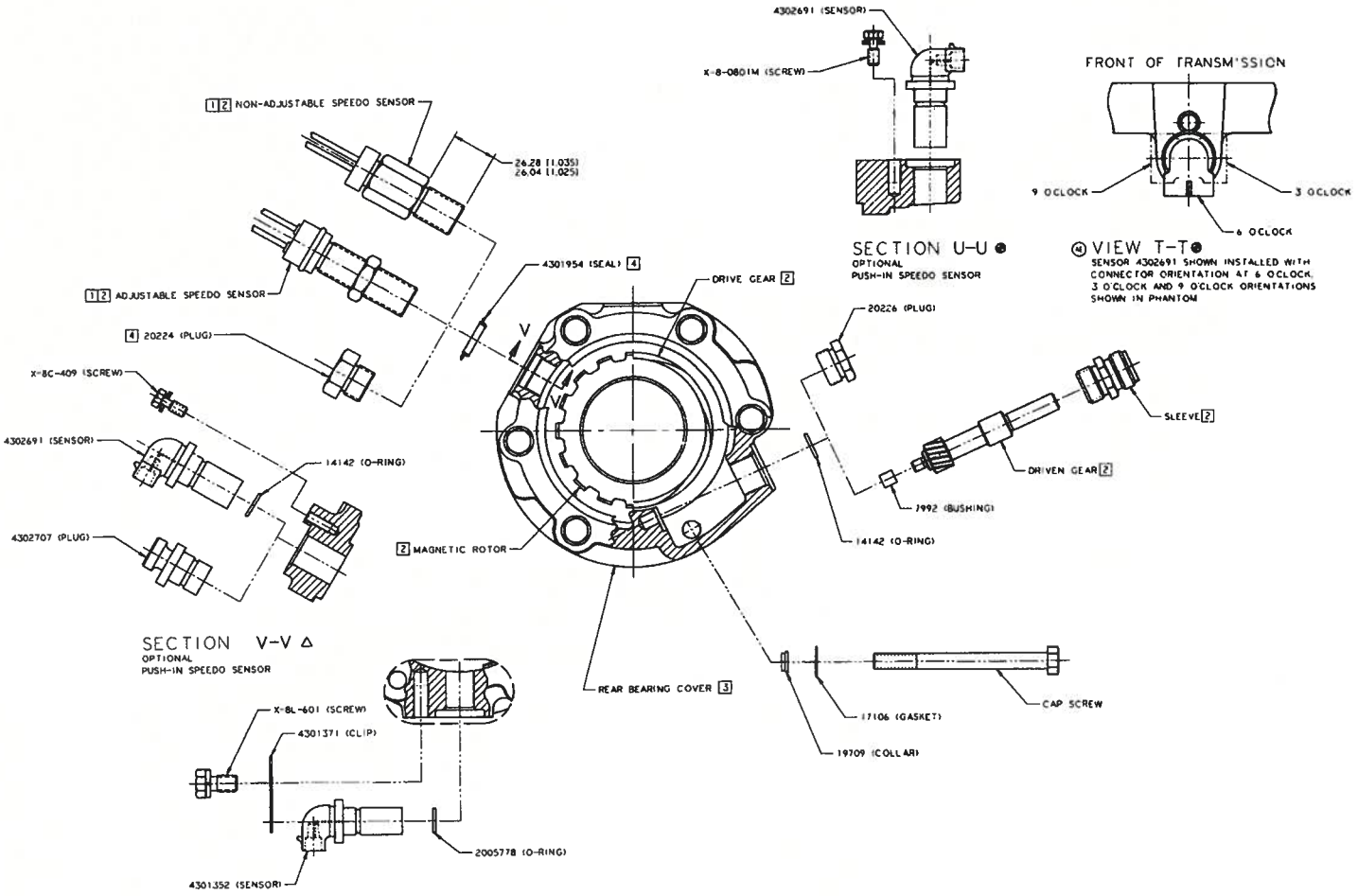

The O-ring assembled in mechanical speedometer opening *may* be used with mechanical speedometer sleeve.

Sealing Collar Instruction

To help eliminate oil seepage we have added a new nylon sealing collar for one capscrew on the rear bearing cover. To accept this sealing collar a chamfer was added to the hole. To assemble, place the 17106 Brass Washer in the capscrew, then assemble the 19709 Sealing Collar with the large end against the washer.

Yoke Installation

Before installing yoke make sure it is free of any contaminates. Apply a light coat of engine oil on the chamfered edge of the yoke sealing surface. This will help prevent seal lip roll over when installing the yoke.

Oil Seal Kits

Model Application	Part Number	Description
6-7-8-8L-9-10-11-13-15-18 Speed	K-2262	20807 Seal and 20808 Slinger
	K-2413	Seal and Slinger Installation Tool

Oil Seals and Slinger Installation Tools K-2413

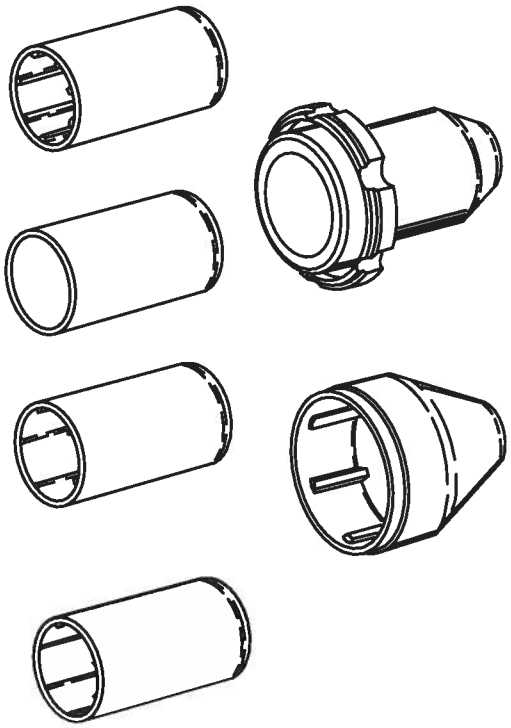

A new improved output shaft oil seal is now available on Eaton Fuller Transmissions. The seal slinger, which is pressed on the output yoke. The yoke used with this seal is special in that it is hardened and there is a machined step to accept the slinger.

The part number for the seal is K-2262.

A special installation tool is required to properly install the seal and slinger. It can be obtained by Fuller part number K-2413. Installation instructions are included.

Note: The new seal cannot be used without the slinger.

Now available
Seal Maintenance Guide Printed in Full Color
Order TCSM-0912

Speedometer Layout Schematic

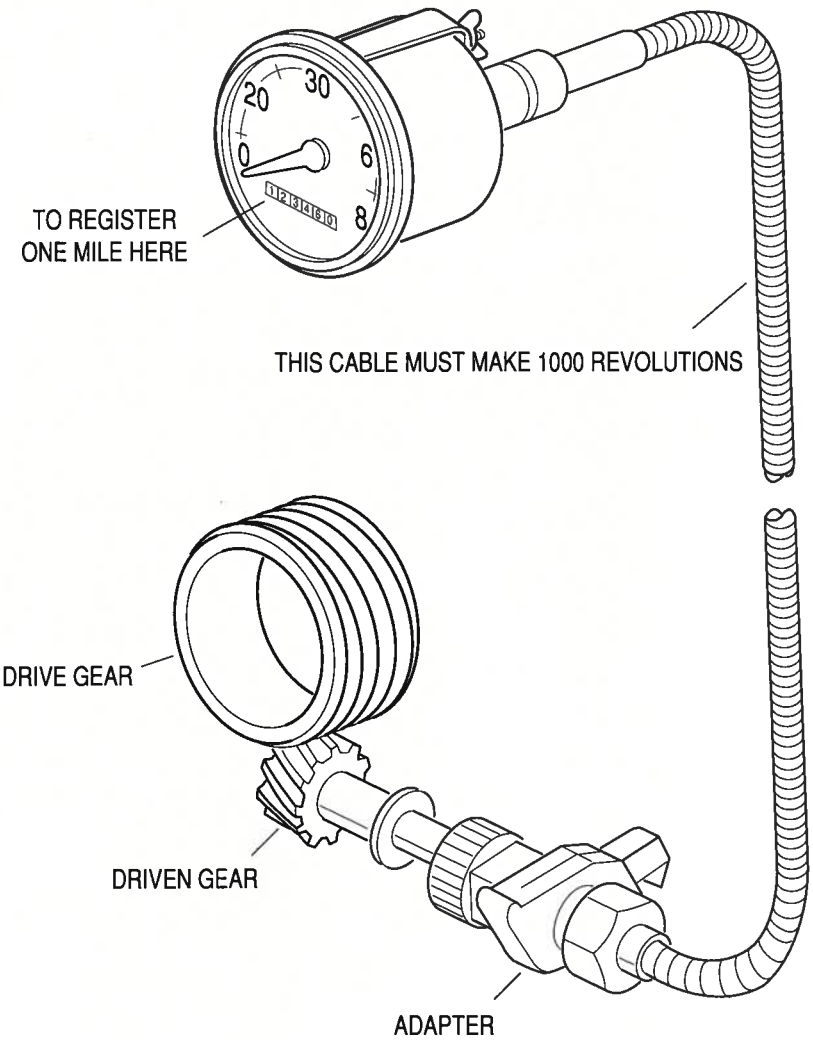

1. The speedometer head must turn 1000 revolutions to register one mile.
2. Select speedometer drive gear set from Speedometer Gear Chart No. 847-S for particular transmission.
3. The number of teeth in the speedometer driven gear divided by the number of teeth in the speedometer drive gear form a ratio.
4. To correct for various tire sizes and axle ratios, a speedometer adapter built to a specified ratio is required.
5. Calculate the adapter ratio required and select the nearest ratio from Stewart-Warner chart for 666 series drive joint.

Speedometer Driven Gear

$$\text{Speedometer Adapter Ratio} = \frac{(1000) \times \text{Speedometer Drive Gear}}{(\text{Tire revs per mile}) \times (\text{rear axle ratio})}$$

Example

Transmission:	Model RT-11609A
Tire Size:	10.00 x 20
Axle Ratio:	3.90
Speedometer Ratio:	13/6 = 2.167
Tire Revs Per Mile:	494

$$\text{Speedometer Adapter Ratio} = \frac{(1000) \times (2.167)}{494 \times 3.90} = 1.1248$$

Therefore use nearest adapter ratio selected from chart of 1.1250

Models	Drive Gear				Driven Gear	
	Number Teeth	Part Number	Ratio	Drive Type	Number Teeth	Part Number
FS-3005 FS-3205 FS-4005 FS-4205	5	86301	3.000	E	15	3314433
			3.000	H	15	5501501
			3.200	E	16	3315575
			3.200	H	16	5501502
			3.400	E	17	3313714
			3.400	K	17	3314545
			3.400	H	17	5501504
	6	3314448	2.833	H	17	5501503
			2.833	E	17	3314449
FS-5005 FS-5205	6	3314685	2.667	J	16	5501529
	5	86305	2.400	A	12	86308
			2.600	A	13	86311
FS-6106	5	86138	3.000	E	15	86139
			3.000	D	15	86144
FS-6005 FS-6105 FS-6205 FS-6305 FS-5106 FS-5306 FS-6206 FS-6306 FS-7206	6	3316283	2.667	J	16	5501529
	5	86302	3.000	D	15	86303
			3.000	E	15	86304
	5	86306	2.400	A	12	86309
			2.600	A	13	86316
	6	86310	2.000	A	12	86309
	7	86307	1.714	A	12	86309

Models	Drive Gear				Driven Gear	
	Number Teeth	Part Number	Ratio	Drive Type	Number Teeth	Part Number
FS-8206 FSO-8206	6	86313	2.167	A	13	86314
			2.333	A	14	86315
	8	86312	1.625	A	13	86314
	8	5510520	1.825	A	15	5501517
			2.000	A	16	5501518
			2.125	A	17	5501519
	5	5501508	2.400	A	12	5501505
			2.600	A	13	5501506
			2.800	A	14	5501507
	6	5501516	2.500	A	15	5501513
			2.667	A	16	5501514
			2.833	A	17	5501515
	4	5501512	3.000	A	12	5501509
			3.250	A	13	5501510
			3.500	A	14	5501511
RT-6609 Right Hand RT-8609 RT-610 RT-6610 Left Hand	6	86063	2.000	A	12	86142
			2.167	A	13	86137
			2.333	A	14	86143
			2.333	E	14	86145
	6	86099	2.167	A	13	86100
			2.333	E	14	86149
T-905 T-11605 2-A-92	3	86028	4.667	A	14	86029
			5.333	A	16	86069
	3	86038	4.333	A	13	86070
	4	86045	3.000	A	12	86079
			3.250	A	13	86077
	6	86030	2.333	A	14	86031
	6	86063	2.167	A	13	86092

Models	Drive Gear				Driven Gear	
	Number Teeth	Part Number	Ratio	Drive Type	Number Teeth	Part Number
T-955AL T-955ALL TA-4510 T-1056 T-11606 T-11607 T-14607	4	86067	3.500	A	14	86086
	6	86068	2.000	A	12	86128
			2.167	A	13	86087
			2.333	A	14	86111
T-8607	4	86140	3.500	A	14	86086
	6	86141	2.000	A	12	86128
			2.167	A	13	86087
			2.333	A	14	86111
RT-906 RT-11610 RTO-958LL RTLO-11610B RT-7608LL RT-11710 RT-8608LL RT-12610 RT-9508 RTLO-12610B RT-11608 RT-12710 RT-11608LL RTLO-13610B RT-11708LL RT-13610 RT-9509 RT-6613 RT-11509 RT-9513 RT-11609 RT-11613 RT-11709 RTO-11813 RT-12609 RTLO-12613B RT-12709 RTLO-12713A RT-13609 RT-613 RT-13709 RT-915 RT-910 RT-11615 RT-1110 RT-11715	4	86067	3.500	A	14	86086
	5	5501534	2.800	A	14	5501532
	6	86068	2.000	A	12	86128
			2.167	A	13	86087
			2.167	F	13	86148
			2.333	A	14	86111
			2.333	E	14	86146
	6	86127	2.333	C	14	86123
			2.333	A	14	5501527
			2.500	C	15	86126
			2.500	A	15	5501528
			2.667	A	16	5501526

Models		Drive Gear				Driven Gear	
		Number Teeth	Part Number	Ratio	Drive Type	Number Teeth	Part Number
AT-1202		3	86114	4.000	B	12	86115
RTO-1157	RT-14710	4	86118	3.500	C	14	86119
RTO-11607L	RTLO-15610B	6	86104	2.333	A	14	86108
RTO-11607LL	RTX-15710			2.333	B	14	86105
RTO-11707LL	RTLO-16610B	6	86122	2.333	A	14	5501527
RTO-11707DLL	RTX-16710			2.333	C	14	86123
RTO-13707LL	RT-12513			2.500	C	15	86126
RTO-13707MLL	RT-14613			2.500	A	15	5501528
RTO-13707DLL	RTLO-14613B			2.667	A	16	5501526
RTO-1258LL	RTLO-14713A	6	5501521	2.167	F	13	86148
RT-14608	RTO-14813			2.333	E	14	86146
RTO-14608LL	RT-15613	7	86120	2.429	C	17	86121
RTO-14708LL	RTO-15813						
RTO-11109-ATE	RTLO-16713A						
RTO-11109-AT	RT-12515						
RTO-11709MLL	RT-14615						
RT-12509	RT-14715						
RTO-13109-ATE	RT-15615						
RTO-13109-AT	RT-15715						
RTO-14109-ATE	RTLO-9118A-MT						
RTO-14109-AT	RTLO-11118A-MT						
RT-14609	RTLO-13118A-MT						
RT-14709	RTO-14618						
RTO-14709MLL	RTLO-14618A						
RTX-16709	RTLO-14718B						
RT-12510	RT-15618						
RT-14610	RTLO-16618						
RTLO-14610A	RTLO-16718B						
RTLO-14610B	RTLO-18718B						

Models	Number Teeth	Rotor Part Number
FS-8206 FSO-8206	6 16	4301984 4300675*
RT-610 RT-6609 RT-6610 RT-8609	6 16	4301545 20783*
T-905 T-11605 2-A-92	6 16	4301545 20783*
FS-3005 FS-3205 FS-4005 FS-4205	16	21555*
FS-5005 FS-5205	1.75" 16 1.96" 16	23485 21558
FS-6106	16	20971*
FS-6005 FS-6105 FS-6205 FS-6305 FS-5106 FS-5306 FS-6206 FS-6306 FS-7206	6 16	4300003 3316160*

* Standard

Models		Number Teeth	Rotor Part Number
T-955AL	T-1056	16	20192*
T-955ALL	T-11606		
TA-4510	T-11607		
	T-14607		
T-8607		16	21130*
RT-906	RT-1110	11 16	20190 20192*
RTO-958LL	RT-11610		
RT-7608LL	RTLO-11610B		
RT-8608LL	RT-11710		
RT-9508	RTLO-12610B		
RT-11608	RT-12710		
RT-11608LL	RTLO-13610B		
RT-11708LL	RT-13610		
RT-9509	RT-9513		
RT-11509	RT-613		
RT-11609	RT-6613		
RT-11709	RT-11613		
RT-12609	RTO-11813		
RT-12709	RTLO-12613B		
RT-13609	RTLO-12713A		
RT-13709	RT-915		
RT-910	RT-11615		
	RT-11715		

* Standard

Models		Number Teeth	Rotor Part Number
AT-1202		11	20189
RTO-1157	RT-14710		
RTO-11607L	RTLO-15610B		
RTO-11607LL	RTX-15710	16	20191*
RTO-11707LL	RTLO-16610B		
RTO-11707DLL	RTX-16710		
RTO-13707LL	RT-12513		
RTO-13707MLL	RT-14613		
RTO-13707DLL	RTLO-14613B		
RTO-1258LL	RTLO-14713A		
RT-14608	RTO-14813		
RTO-14608LL	RT-15613		
RTO-14708LL	RTO-15813		
RTO-11109-ATE	RTLO-16713A		
RTO-11109-AT	RT-12515		
RTO-11709MLL	RT-14615		
RT-12509	RT-14715		
RTO-13109-ATE	RT-15615		
RTO-13109-AT	RT-15715		
RTO-14109-ATE	RTLO-91118A-MT		
RTO-14109-AT	RTLO-11118A-MT		
RT-14609	RTLO-13118A-MT		
RT-14709	RTO-14618		
RTO-14709MLL	RTLO-14618A		
RTX-16709	RTLO-14718B		
RT-12510	RT-15618		
RT-14610	RTLO-16618		
RTLO-14610A	RTLO-16718B		
RTLO-14610B	RTLO-18718B		

* Standard

Mechanical System

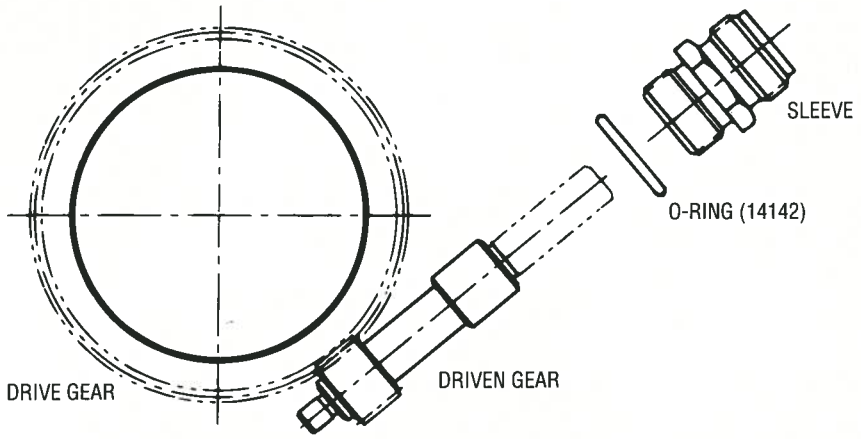

Mechanical Speedometer Drive End Types

Type A

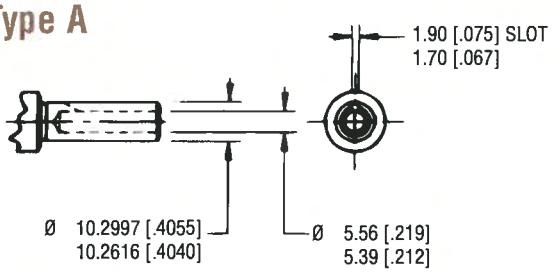

USE 86013 OR 86147 SLEEVE WITH R.H. OIL THREADS
OR A-6425 SLEEVE ASSY WITH OIL SEAL
OR 5501523 DRIVE KEY AND A-6426 SLEEVE ASSY WITH OIL SEAL

Type B

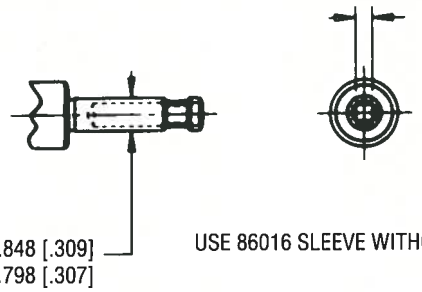

USE 86016 SLEEVE WITHOUT OIL THREADS

Type C

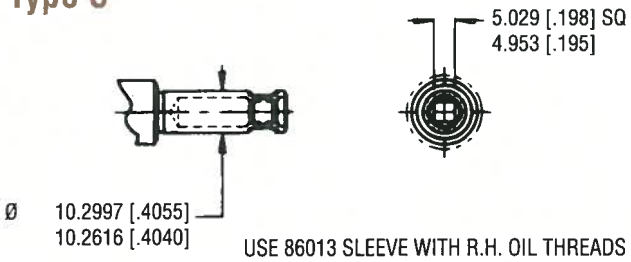

USE 86013 SLEEVE WITH R.H. OIL THREADS

Type D

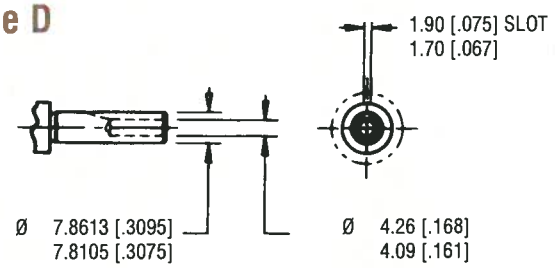

USE 86016 SLEEVE WITHOUT OIL THREADS

Type E

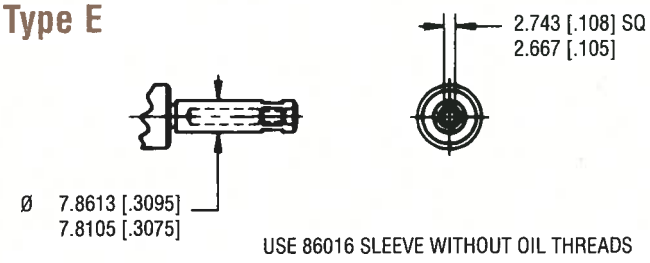

USE 86016 SLEEVE WITHOUT OIL THREADS

Type F

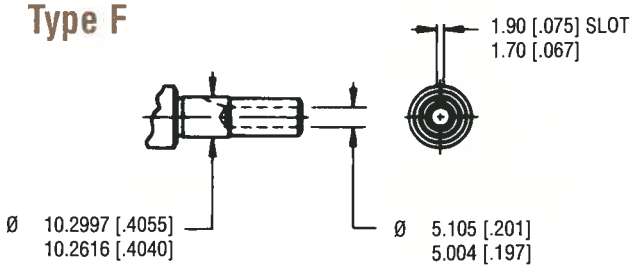

USE 86013 OR 86147 SLEEVE WITH R.H. OIL THREADS

Type G

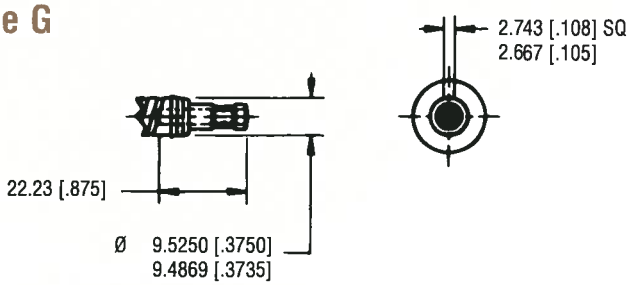

USE 86016 SLEEVE WITHOUT OIL THREADS

Type H

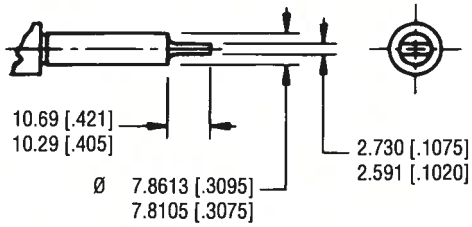

USE 86016 SLEEVE WITHOUT OIL THREADS

Type J

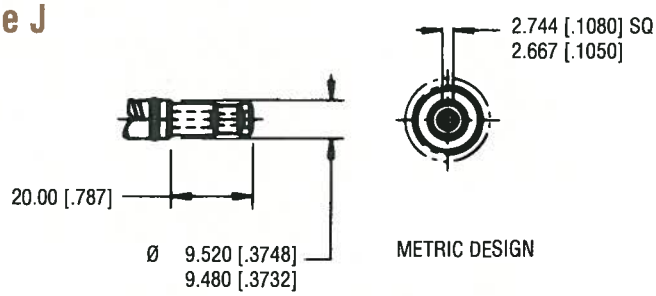

USE 86016 SLEEVE WITHOUT OIL THREADS

Type K

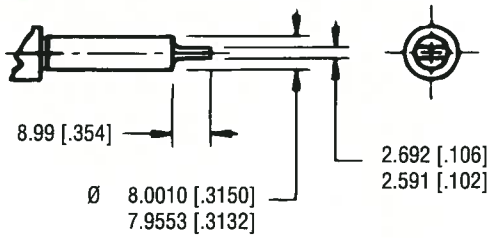

USE 86016 SLEEVE WITHOUT OIL THREADS

Magnetic System

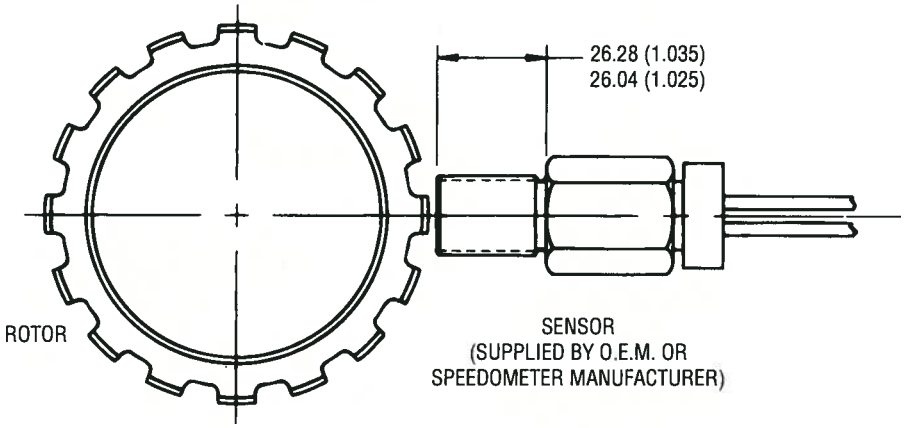

Push-In Type Sensor

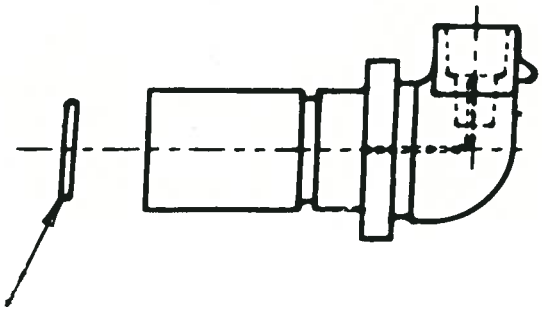

The illustrations below details the different styles of yokes. For proper identification of your yoke series, you will need to take measurements from three areas of the yoke. Refer to the dimension drawing and the table.

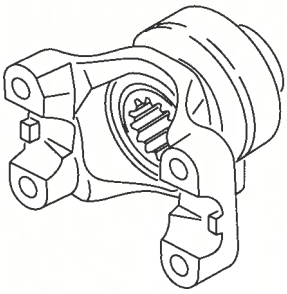

Half Round

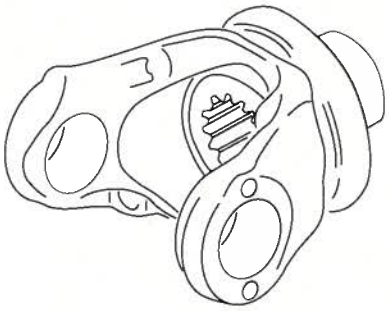

Full Round

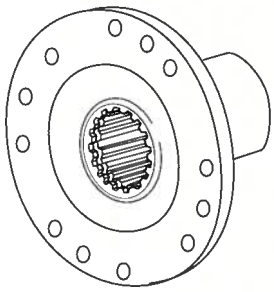

Flange

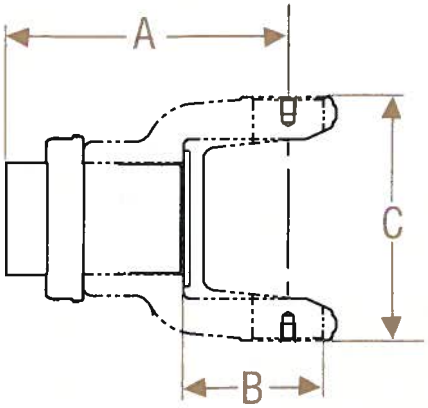

Dimensions In Inches

Dimension A	4-3/4	4-15/16	5-3/16	5-1/4	5-1/4	5-1/4
Dimension B	1-7/8	1-7/8	1-15/16	1-15/16	1-15/16	1-15/16
Dimension C	5-5/16	5-5/16	6-1/16	7	7-1/2	5-5/16
Yoke Series	1610	1610	1710	1710	1760	1810

Dimensions In Inches

Dimension A	5-5/16	5-7/16	6	6-1/8	6-3/16	6-3/8
Dimension B	1-7/8	1-15/16	1-7/8	1-15/16	1-7/8	1-15/16
Dimension C	5-5/16	6-1/16	5-5/16	6-1/16	5-5/16	6-1/16
Yoke Series	1610	1710	1610	1710	1610	1710

Major Diameter 1.750 - 10 Spline - Hub Diameter at Oil Seal 2.500							
Half Round	Full Round	Flange	Tapped Holes	Non-Tapped Holes	Yoke Series	Notes	Part Number
X				X	1480	w/Rock Shield	86904
X			X		1480	5/16-24	5505508
X			X		1480	3/8-24	5505509
X			X		1480	3/8-24 w/Rock Shield	5505535
X				X	1550	w/Rock Shield	86903
		X		X	1550		86911
		X			1550		5505501
X			X		1550		5505510
		X			1550	w/Bolts	5505513
X			X		1550	3/8-24	55055536
X			X		1590	3/8-24 w/Rock Shield	55055527
X			X		1610	w/ Rock Shield	86905

The above data applies to the following model series:

FS-3005 FS-3205

FS-4005 FS-4205

Major Diameter 2.343 - 45T Involute Spline - Hub Diameter at Oil Seal 3.750							
Half Round	Full Round	Flange	Tapped Holes	Non-Tapped Holes	Yoke Series	Notes	Part Number
X			X		1610		86763
	X			X	1710		86737
X			X		1710		86764
	X			X	1760		86736
X			X		1760		5505521
		X		X	1810		86759

The above data applies to the following model series:

FS-8206

T-8607

Major Diameter 1.963 - 10 Spline - Hub Diameter at Oil Seal 2.750							
Half Round	Full Round	Flange	Tapped Holes	Non-Tapped Holes	Yoke Series	Notes	Part Number
X				X	1550	w/Rock Shield	86902
X			X		1550		5505522
X			X		1550	3/8-24	5505534
X			X		1590	3/8-24	5505528
X			X		1610	w/Rock Shield	86901
		X			1610		5505523
		X			1610	w/Bolts	5505532
X			X		1710		5505549
	X				1710		5505550
The above data applies to the following model series: FS-5005 FS-5205							

Major Diameter 1.750 - 10 Spline - Hub Diameter at Oil Seal 2.500							
Half Round	Full Round	Flange	Tapped Holes	Non-Tapped Holes	Yoke Series	Notes	Part Number
		X		X	1550		86912
X			X		1550		5505502
X			X		1610		5505503
		X			1610		5505504
		X			1610	w/Bolts	5505511
The above data applies to the following model series: FS-5005							

Major Diameter 2.000 - 38T Involute Spline - Hub Diameter at Oil Seal 2.750							
Half Round	Full Round	Flange	Tapped Holes	Non-Tapped Holes	Yoke Series	Notes	Part Number
X				X	1550	3/8-24 w/Rock Shield	86726
X					1550	w/Rock Shield	86743
X				X	1590	3/8-24	5505529
	X				1610		86725
X				X	1610	w/Rock Shield	86750
		X		X	1610		86906
		X		X	1610		86907
		X			1610		5505507
		X	X		1610		5505512
	X				1710		86745
X				X	1710	w/Rock Shield	86746
		X	X		1710		86751
		X	X		1710		86752
		X	X		1710	w/Rock Shield	86758

The above data applies to the following model series:

FS-6005	FS-5106A	FS-6206A	FS-5306A
FS-6105	FS-6106	FS-7206A	

Major Diameter 2.750 - 10 Spline - Hub Not Used For Seal - Spacer Required							
Half Round	Full Round	Flange	Tapped Holes	Non-Tapped Holes	Yoke Series	Notes	Part Number
X			X		1710	1/2-20 Tapped Holes	86603
X			X		1760	1/2-20 Tapped Holes	86604
X			X		1810	1/2-20 Tapped Holes	86605

The above data applies to the following model series:

RTO-11707LL	RT-15715
RTO-14708LL	RTO-11709MLL
RT-14715	RTO-14709MLL

Major Diameter 2.250 - 10 Spline - Hub Diameter at Oil Seal 3.500							
Half Round	Full Round	Flange	Tapped Holes	Non-Tapped Holes	Yoke Series	Notes	Part Number
		X		X	1610	Can Be Used w/Brake	86514
		X		X	1610		86734
	X			X	1610		86757
X			X		1610	3/8-24 Tapped Holes	5505505
		X		X	1650/1710		86735
	X			X	1710		86733
X			X		1710	1/2-20 Tapped Holes	5505506
	X			X	1760		86724
		X		X	1810	Flange	86529
	X			X	1810		86563

The above data applies to the following model series:

T-11605 RT-8609

RT-6609 RT-6610

Major Diameter 2.250 - 10 Spline - Hub Diameter at Oil Seal 3.750							
Half Round	Full Round	Flange	Tapped Holes	Non-Tapped Holes	Yoke Series	Notes	Part Number
X			X		1610	1/2-20 Tapped Holes	86747
		X		X	1650		86753
X			X		1710	1/2-20 Tapped Holes	86748
		X		X	1710		86753
X			X		1760	1/2-20 Tapped Holes	86772
X			X		1810	1/2-20 Tapped Holes	86768
		X		X	1810		86744

The above data applies to the following model series:

T-11605 RT-6609 RT-8609 RT-6610

Major Diameter 2.544 - 49T Involute Spline - Hub Diameter at Oil Seal 3.750							
Half Round	Full Round	Flange	Tapped Holes	Non-Tapped Holes	Yoke Series	Notes	Part Number
		X		X	1650/1710		86738
	X			X	1710		86741
X			X		1710	1/2-20 Tapped Holes	86775
		X		X	1760/1810		86739
	X			X	1760		86740
X			X		1760	1/2-20 Tapped Holes	86773
	X			X	1810		86742
X			X		1810	1/2-20 Tapped Holes	86774

The above data applies to the following model series:
T-14607

Major Diameter 2..500 - 10 Spline - Hub Diameter at Oil Seal 3.750							
Half Round	Full Round	Flange	Tapped Holes	Non-Tapped Holes	Yoke Series	Notes	Part Number
		X		X	1650/1710		86761
	X			X	1710		86717
X			X		1710	1/2-20 Tapped Holes	86749
	X			X	1760		86716
		X		X	1760/1810		86760
X			X		1760	1/2-20 Tapped Holes	86762
	X			X	1810		86718
X			X		1810	1/2-20 Tapped Holes	86769

The above data applies to the following model series:

T-11607	RT-11608	RT-11609	RTLO-11610B	RT-11613
RT-7608LL	RTO-11608LL	RT-11709	RT-11710	RT-11615
RT-8608L	RTO-11708LL	RT-11610	RT-6613	RT-11715

Major Diameter 2.500 - 10 Spline - Hub Diameter at Oil Seal 3.750							
Half Round	Full Round	Flange	Tapped Holes	Non-Tapped Holes	Yoke Series	Notes	Part Number
		X	X		1650/1710		86761
	X				1710		86717
X				X	1710	1/2-20 Tapped Holes	86749
	X				1760		86716
		X	X		1760/1810		86760
X				X	1760	1/2-20 Tapped Holes	86762
	X				1810		86718
X				X	1810	1/2-20 Tapped Holes	86769

The above data applies to the following model series:

RT-12609	RT-13709	RTLO-13610B	RTLO-12613B
RT-12709	RT-12610	RT-12710	RTLO-12713A
RT-13609	RTLO-12610B	RT-13710	

Major Diameter 2.750 - 10 Spline - Hub Diameter at Oil Seal 3.750							
Half Round	Full Round	Flange	Tapped Holes	Non-Tapped Holes	Yoke Series	Notes	Part Number
	X				1710		86719
X				X	1710		86765
	X				1760		86720
		X	X		1760/1810		86728
X				X	1760	1/2-20 Tapped Holes	86771
	X				1810		86721
X				X	1810	1/2-20 Tapped Holes	86770
X				X	1810	1/2-20 Tapped Holes	5505531

The above data applies to the following model series:

RTO-11607L	RT-14610	RT-15613	RTO-15618
RTO-11607LL	RT-14610B	RTLO-14613B	RTLO-14618A
RTO-11707LL	RT-15610B	RTLO-14713A	RTLO-16618A
RT-14608	RT-16610B	RTLO-16713A	RTLO-14718B
RTO-14608LL	RT-14710	RT-14615	RTLO-16718B
RTO-14708LL	RTX-15710	RT-15615	RTLO-18718B
RT-14609	RTX-16710	RT-14715	
RT-14709	RT-14613	RT-15715	

Countershaft Brake Valve
600-6600
7608LL

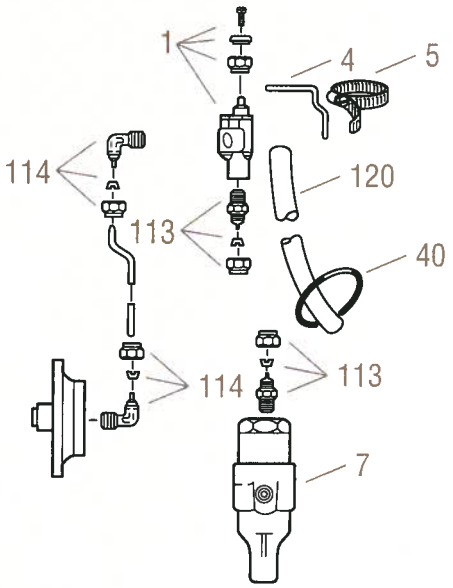

Countershaft Brake Valve

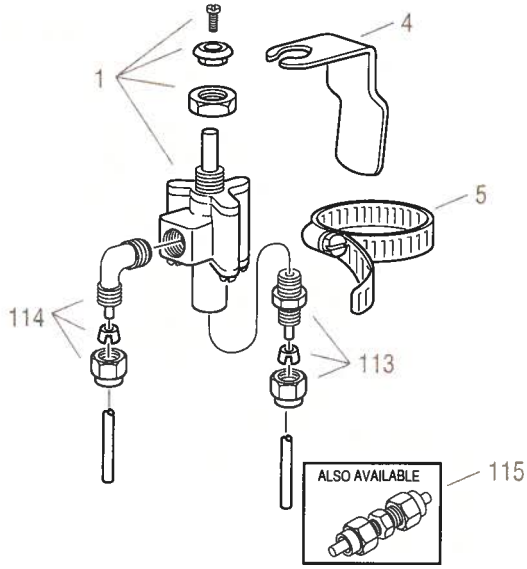

Countershaft Brake Assembly

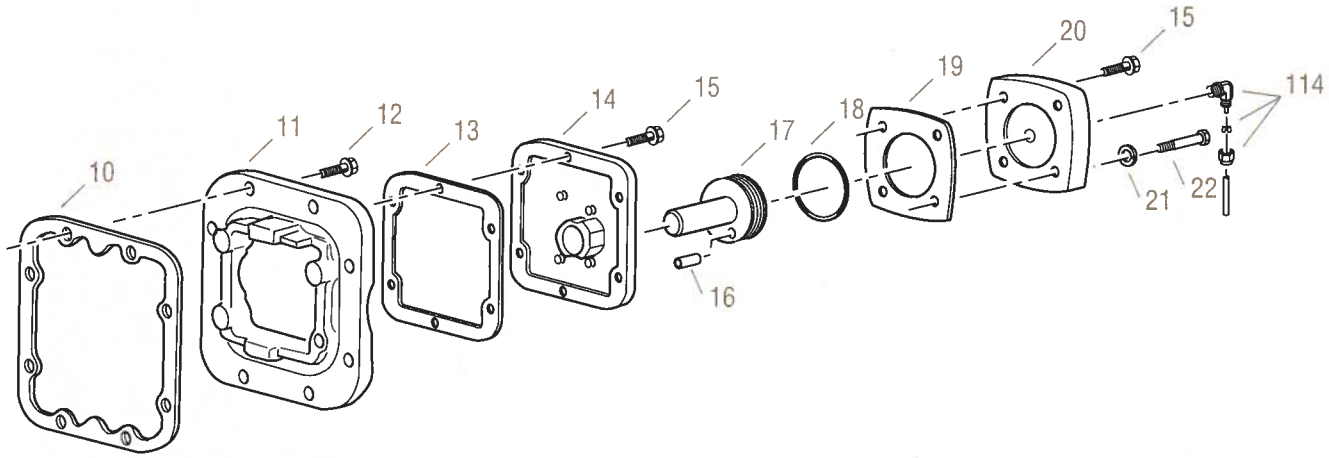

Tubing Harness
52901 50'

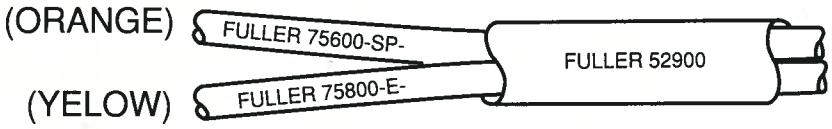

Item	Qty Used	Part No.	Description
1	1	16859	Actuator valve
4	1	16914	Bracket
5	1	16924	Clamp
7	1	A-4740	Regulator film assembly
10	1	4302810	Gasket
11	1	18471	Adapter Plate *order* K-1712
12	8	X-8L-722	Capscrew 7/16"-14 x 1-1/4"
13	1	1684	Gasket
14	1	16656	PTO brake housing
15	6	X-8L-604	Capscrew 3/8"-16 x 1-1/4"
16	1	62515	Roll pin
17	1	16658	Piston
18	1	16660	"O" ring
19	1	16661	Gasket
20	1	16659	PTO brake cover
21	2	X-3-600	Lockwasher 3/8"
			replaced by X-8L-607
22	2	X-8-607	Capscrew 3/8"-16 x 2-1/4"
			replaced by X-8L-607
or	2	X-8L-607	Capscrew 3/8"-16 x 2-1/4"

Item	Qty Used	Part No.	Description
40	1	13571	"O" Ring
113		84004	Connector assembly 1/8" pipe
114		85001	Elbow assembly 1/8" pipe
115		84102	Connector assembly 5/32" tube
120		80120	Sheathing black 50'

Part No.	Description
K-2075	Brake kit TCB-6
K-2074	Brake kit TCB-8
K-2076	Repair kit brake TCB
K-1712	Adapter plate kit

Operation — The braking action is obtained by forcing a metal piston against the OD of the countershaft PTO gear. Piston is air activated by an off-on control button which can be manually operated, or it can be activated by extreme clutch pedal travel. When button is pushed down, the brake is activated.

The transmission countershaft brake is not an upshift brake. It is to be used only to stop the gearing from rotating when making the initial gear engagement of first or reverse after starting the engine.

The brake is not intended to be a cure for dragging or improperly adjusted clutches. If the brake is used in deference to a clutch repair, premature wear of the brake's component parts can be expected.

Fuller Models TCB-6 & TCB-8
Transmission Countershaft Brake

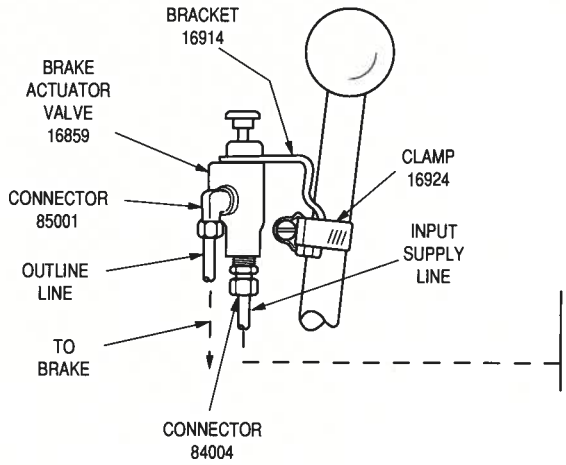

Install brake actuator valve on gear shift lever convenient for driver.

Use 5/32" OD Nylon air lines.

Air supply from vehicle's air system; 80 to 150 psi operating pressure. It is important that this line does not come in contact with exhaust system or any sharp edges.

The brake piston must be aligned with PTO gear.

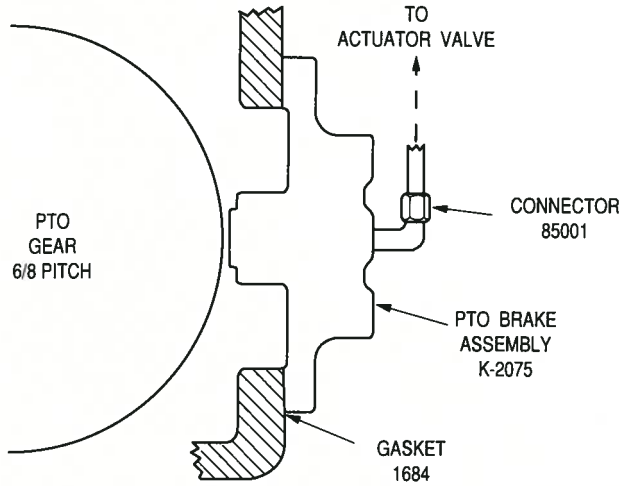

6-Bolt PTO Opening Installation for Model TCB-6

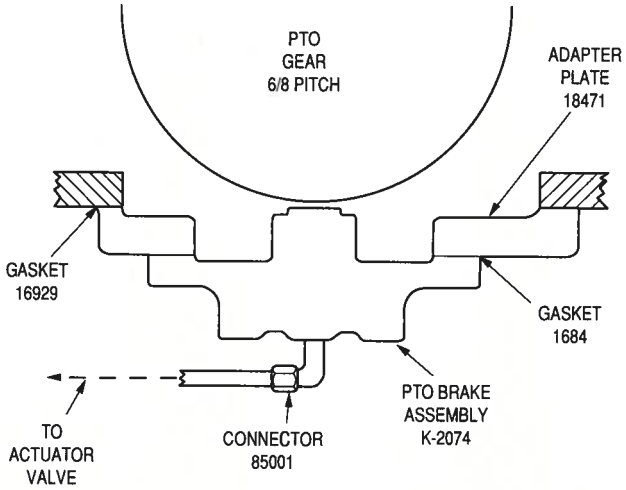

8-Bolt PTO Opening Installation for Model TCB-8

The air actuated countershaft brake is used to assist intitial gear engagement in first or reverse by providing a braking force against the transmission gearing.

Model TCB-6 mounts directly on a standard six bolt PTO opening which has a distance of 1.090/1.080 inches from the mounting surface to the gear pitch diameter. The PTO gear must be a 6/8 pitch gear.

Model TCB-8 is mounted on the bottom 8 bolt PTO opening of Fuller twin countershaft transmissions with the use of an adapter plate. The adapter plate adjusts the mounting-surface-to-gear diameter dimension from .815/.805 to 1.090/1.080 inches. The PTO gear must be a 6.8 pitcher gear.

Auxiliary Countershaft Mounted Pump

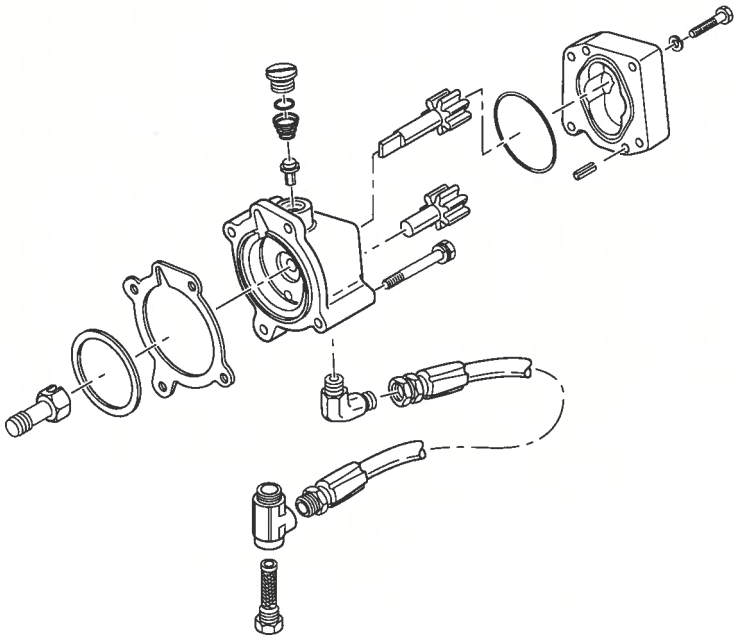

Integral Oil Pump

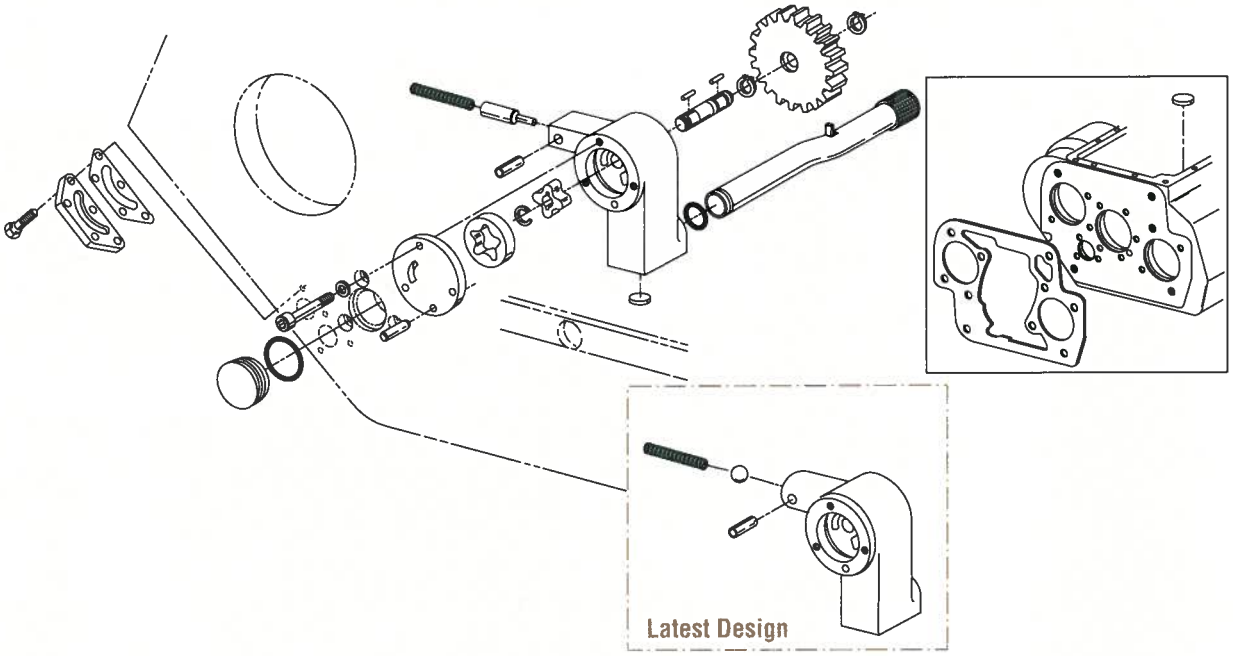

When installing an oil cooler on a Fuller transmission, it is not necessary to connect an auxiliary lube line to the auxiliary section. This optional lube line was designed only to be used in severe applications in which the vehicle will encounter extremely steep down grades, typically in off highway and agricultural applications. For normal oil cooler installations the lube return line need only be connected to the inlet hole at the front of the shift bar housing to lubricate the main drive gear set.

Oil Cooler Kits

PTO Mounted Pump Assemblies

Model Series		Complete Oil Cooler Kit – Pump – Cooler – Filter – Mtg. Hdw. – Hose	Oil Cooler Installation Parts Kit – Cooler – Mtg Hdw. – Hose	Lubrication Kit Complete – Pump – Screen Gasket – Mtg. Hdw.	Oil Pump Installation Parts Kit – Mtg. Hdw. – Hose – Less Pump	Oil Filter Assembly
600, 6600, 7608LL	6-Bolt PTO	K-2036	K-2035	K-1435	K-1033	S-1404
	8-Bolt PTO	K-2037	K-2035	–	K-1035	S-1404
900, 1100, 11700, 11800, 1200	6-Bolt PTO	K-2038	K-2035	–	K-1033	S-1404
12700, 14600 14700, 14800	8-Bolt PTO	K-2039	K-2035	K-1438	K-1035	S-1404

Note: PTO Pump is not available for T-905, 8607 A/B, 11605, 11607 A/B, and the 14607 A/B Series.

Integral Oil Pump Assemblies

Integral Pump is standard for 15600, 15700, 15800, 16600, 16700 and 18718 series transmissions. Other models may have been built with an integral pump.

Integral Pump is also available for twin countershaft transmissions 8608L, 11600, 11700, 11800, 12600, 12700, 14600, 14700 and 14800 series transmissions except for 8607A/B, 11605, 11606, 11607A/B, 11607L/LL, and the 14607A/B series.

K -1956 Oil Cooler Installation Parts Kit (Integral Pump) w/Cooler — Mtg. Hdw.

Oil Cooler and Lubrication Illustrated Parts List available order form no. TRIP-0931

Oil Cooler Kits

Auxiliary Countershaft Mounted Pump Assemblies

Model Series	Complete Oil Cooler Kit – Cooler – Pump – Collar/Drive Screw – Mtg. Hdw. – Hose – Fittings	Oil Cooler Installation Kit – Cooler – Mtg. Hdw. – Hose – Fittings	Lubrication Driver Set Kit – Pump – Collar – Mtg. Hdw. – Hose – Fittings	Pump Assembly – Pump Only	Pump Installation Kit – Pump – Strainer Tee – Mtg. Hdw.	Oil Filter Assembly
RT/RTO-613, 6613, 906, 910, 915, 958LL, 9508, 9509, 9513, 1110, 11509, 12513, T-955AL/ALL, 7608LL, 8608L, 11608, 11608LL, 11609, 11610, 11613, 11615, 11813, 12609, 13609, 12610, 14613, 14813, 15613, 15615, 15813 Series	K-1700	K-1703	K-1707	A-4679	K-1704	S-1404
RTO-1157/DLL/ 1258LL, RT-12525 Series	K-1701	K-1703	K-1708	A-4678	K-1705	S-1404
RT/RTO-12509 12510, 14608, 14609, 14610, 1157DL, 11607L	K-1702	K-1703	K-1709	A-4680	K-1706	S-1404
RTO-11607LL 14608LL, 14615, 15615 Series	K-1837	K-1703	K-1839	A-4678	K-1838	S-1404
RT/RTO-11700, 12700 13700, 14700 and LL Series	K-2067	K-1703	N/A	A-5167	K-2066	S-1404
RT/RTO-11613, 14613 Series with Taper Bearings RTLO-14613B, 14618	N/A	K-1703	N/A	A-5941	K-2407	S-1404
RTLO-12713A, 14713A	N/A	K-1703	N/A	A-5941	K-2842	S-1404
RTLO-12610B, 13610B RTLO-14610 Series	N/A	K-1703	N/A	A-5941	K-2407	S-1404

Note: The Auxiliary Countershaft Mounted Oil Pump is available for all twin Countershaft model transmissions except for the RT-610, RT-6610, T-905, T-11605, 8607A/B, and 14607A/B Series.

Auxiliary Countershaft Mounted Pump Chart

Model Series	Pump Ass'y	Pump Adapter	Collar	Gasket	Drive Screw
RT-613/RT-6613	A-4679	19402	19405	19410	N/A
RT-7608LL	A-4679	19402	19405	17907	N/A
RT-906	A-4679	19402	19405	19410	N/A
RT-910/RT-11610/RT-12610	A-4679	19402	19405	19410	N/A
RT-915/RT-11615	A-4679	19402	19405	19410	N/A
T-955AL	A-4679	19402	19405	19410	N/A
T-955ALL	A-4679	19402	19405	19410	N/A
RTO-958LL/RTO-11608LL	A-4679	19402	19405	19410	N/A
RT-1110	A-4679	19402	19405	19410	N/A
RTO-1157DL/RTO-11607	A-4680	19401	19404	19409	N/A
RTO-1157DLL	A-4678	19403	19405	17386	N/A
RTO-1258LL	A-4678	19403	19405	17386	N/A
RT-9508/RT-11608	A-4679	19402	19405	19410	N/A
RT-8608L/RT-9509/RT-11609/RT-11709/ RT-12609/RT-12709	A-4679	19402	19405	19410	N/A
RT-9513/RT-11613/RT-11813	A-4679	19402	19405	19410	N/A
RT-11509	A-4679	19402	19405	19410	N/A
RT-12509/RT-14609/RT-14709	A-4680	19401	19404	19409	N/A
RT-12510/RT-14608/RT-14610	A-4680	19401	19404	19409	N/A
RT-12513, 14613, 14813, 15613 and 15813	A-4679	19402	19405	19410	N/A
RT-12515	A-4678	19403	19405	17386	N/A
RT-11607LL/RTO-14608LL/RT-14615/RT-15615	A-4678	19403	20198	17386	N/A
11700, 14700, 15700 Series	A-5167	21466	N/A	21345	21468
RT/RTO-11613, 14613 with tapered Bearings, RTLO-14613, 14618	A-5941	4300718	N/A	4300186	21468
RTLO-12713A, 14713A	A-5941	4300718	N/A	4300186	21468
RTLO-12610B, 13601B, 14610	A-5941	4300718	N/A	4300186	21468

Special For FS-6106 Series

Left Mounting

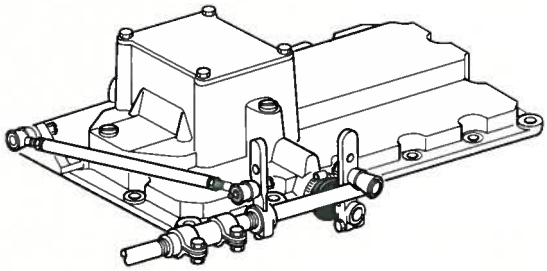

Right Mounting

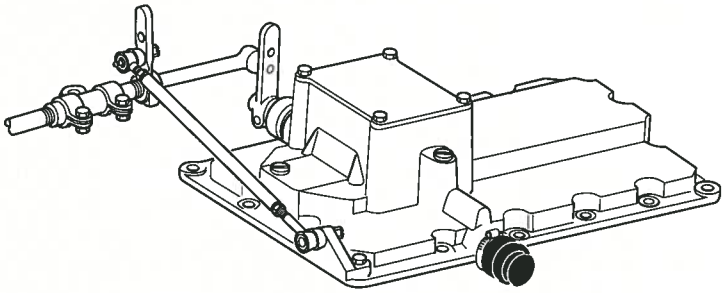

For Additional Lever/Control Information Please See Lever/Control Illustrated List Form TRIP-0930

MR Control

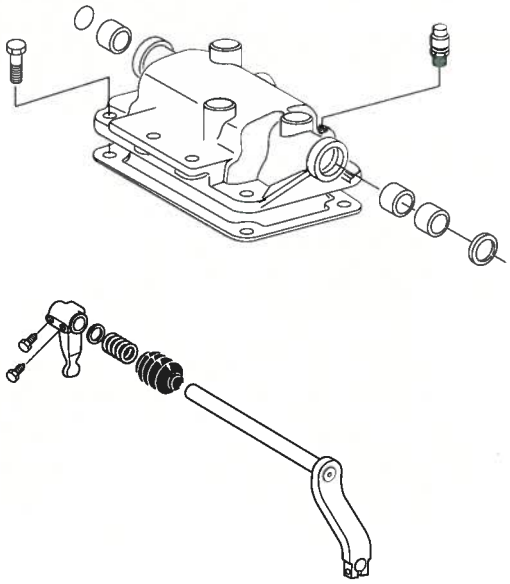

***Note:** Use lockwire at these positions

Remote Control Service Assemblies

Model Application	Part Number	Description
Master Control SRC-1 Service Replacement Assembly	S-1138	With 23" straight lever. Also contains one U-joint and two set screws.
Remote Slave Control SRC-10 Service Replacement Assembly	S-1139	Application: 0° Shift Shaft Angle and left-hand front or rear 10-3/8" centerline offset projection. Also contains: Mounting Studs, Nuts, Gasket, one U-joint and two Set Screws
Remote Slave Control SRC-118 Service Replacement Assembly	S-1140	Application: 18° Shift Lever Angle and left-hand front 10-3/8" centerline offset projection. Also contains: Mounting Studs, Nuts, Gasket, one U-joint and two Set Screws.
Remote Slave Control SRC-10 Service Replacement Assembly	S-1410	Application: 0° Shift Shaft Angle and right-hand front or rear 10-3/8" centerline offset projection. Also contains: Mounting Studs, Nuts, Gasket, one U-Joint and two Set Screws.

SRC-0, SRC-18, SRC-30 replaced by SRC-10, SRC-118, SRC-130

SRC-20 and SRC-218 are especially intended for use with the T-11606, T-11607 (A-B), T-1056, and T-955 Series Transmissions. They reduce the lever movement for rail selection. They will also work on other models to reduce the lever movement for rail selection.

The SRC-4 slave is special for T-955 Series and is available in the 0°, 18° and the 30° housing.
The inner finger, 17062 item 59, is the only part that changes in the slave unit.

The SRC-4 master is intended to be used to reduce the shift lever movement, however, it will also correspondingly increase shift effort.

For Additional Lever/Control Information Please See Lever/Control Illustrated Form TRIP-0930

Q-Master Unit Construction

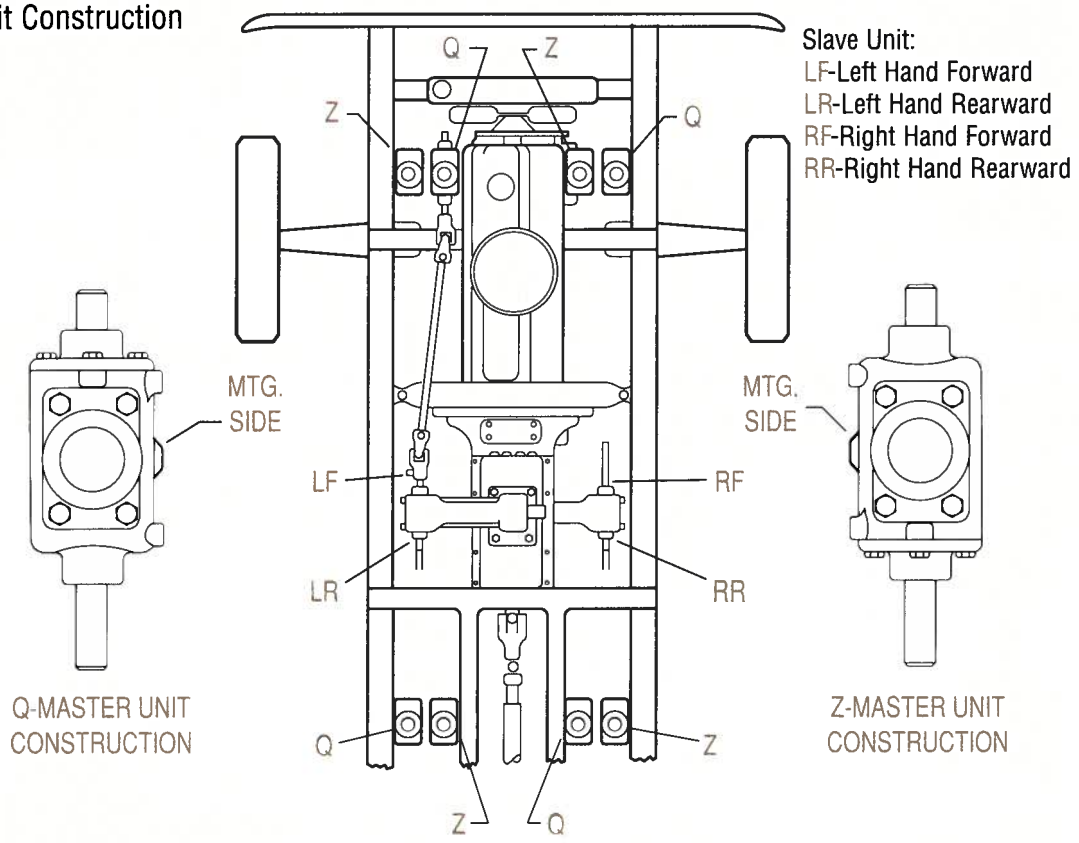

Model	Application	Shift Shaft Angle	Centerline Offset	Shift Shaft Projection	Housing Projection	Weight
SRC-10	3 or 4 rail transmission	0°	10-3/8" 11-1/8"	Front or Rear	Right or Left	13 lbs.
SRC-118	3 or 4 rail transmission	18°	10-3/8"	Front	Left	13 lbs.
SRC-130	3 or 4 rail	30°	8-1/2"	Front	Left	12 lbs.
SRC-20	4 rail	0°	10-3/8"	Front or Rear	Left	17 lbs.
SRC-218	4 rail	18°	10-3/8"	Front	Left	17 lbs.

Housing
LRC 1
LRC 2

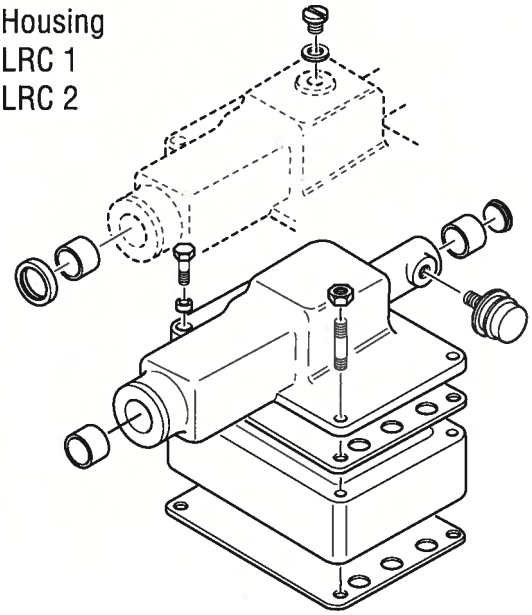

Housing
LRC 3
LRC 4

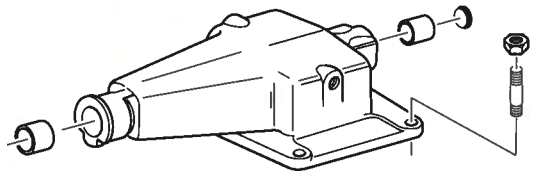

Parts of the LRC

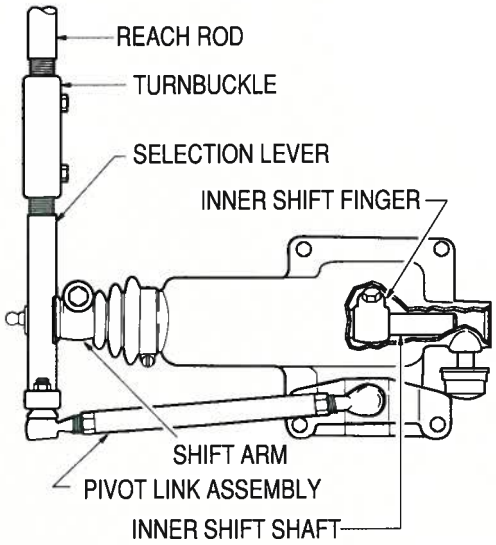

The SCR-4 Master is intended to be used to reduce the shift lever movement. However, it will also correspondingly increase shift effort.

LRC Adjustment

Proper adjustment of the L.R.C. is necessary for smooth shift linkage operation. Use the procedure listed in service bulletin #97 and in the LRC illustrated parts list to insure correct adjustment.

For Additional Lever/Control Information Please See Lever Control Illustrated List Form TRIP-0930

LRC 1
LRC 2

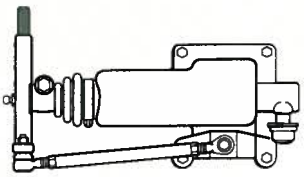

"RT" MODELS
T-11605
T-11606
T-11607

LRC 1 or LRC 3
INSTALL TYPE B

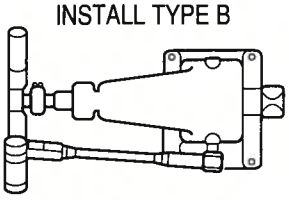

LRC 2 or LRC 4
INSTALL TYPE D

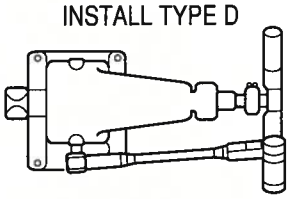

LRC 1 or LRC 3
INSTALL TYPE E

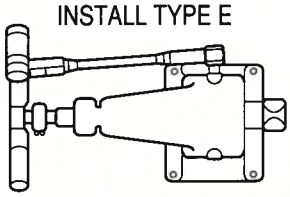

LRC 2 or LRC 4
INSTALL TYPE H

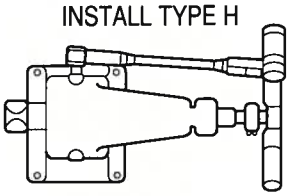

LRC 1 or LRC 3
STD. Bar Housing left hand front or rear
F Bar Housing right hand front or rear

Note: For Reverse Mounted Rear Engine
LRC 1 or LRC 3
Std. Bar Housing, right hand front
F Bar Housing left hand front

LRC 3
LRC 4

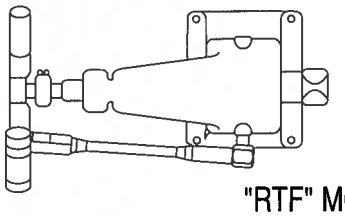

"RTF" MODELS

LRC 2 or LRC 4
INSTALL TYPE A

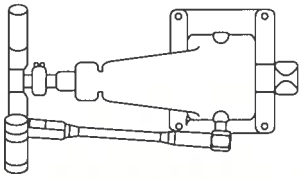

LRC 2 or LRC 4
INSTALL TYPE E

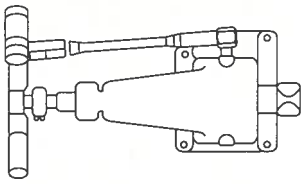

LRC 1 or LRC 3
INSTALL TYPE C

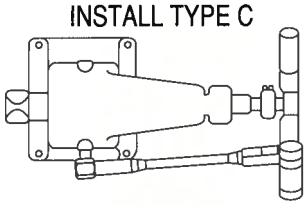

LRC 1 or LRC 3
INSTALL TYPE G

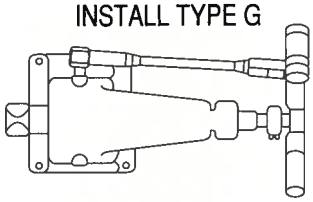

LRC 2 or LRC 4
STD. Bar Housing right hand front or rear
F Bar Housing left hand front or rear

LRC 2 or LRC 4
STD. Bar Housing left hand front
F Bar Housing right hand front

Rearward Offset Installation

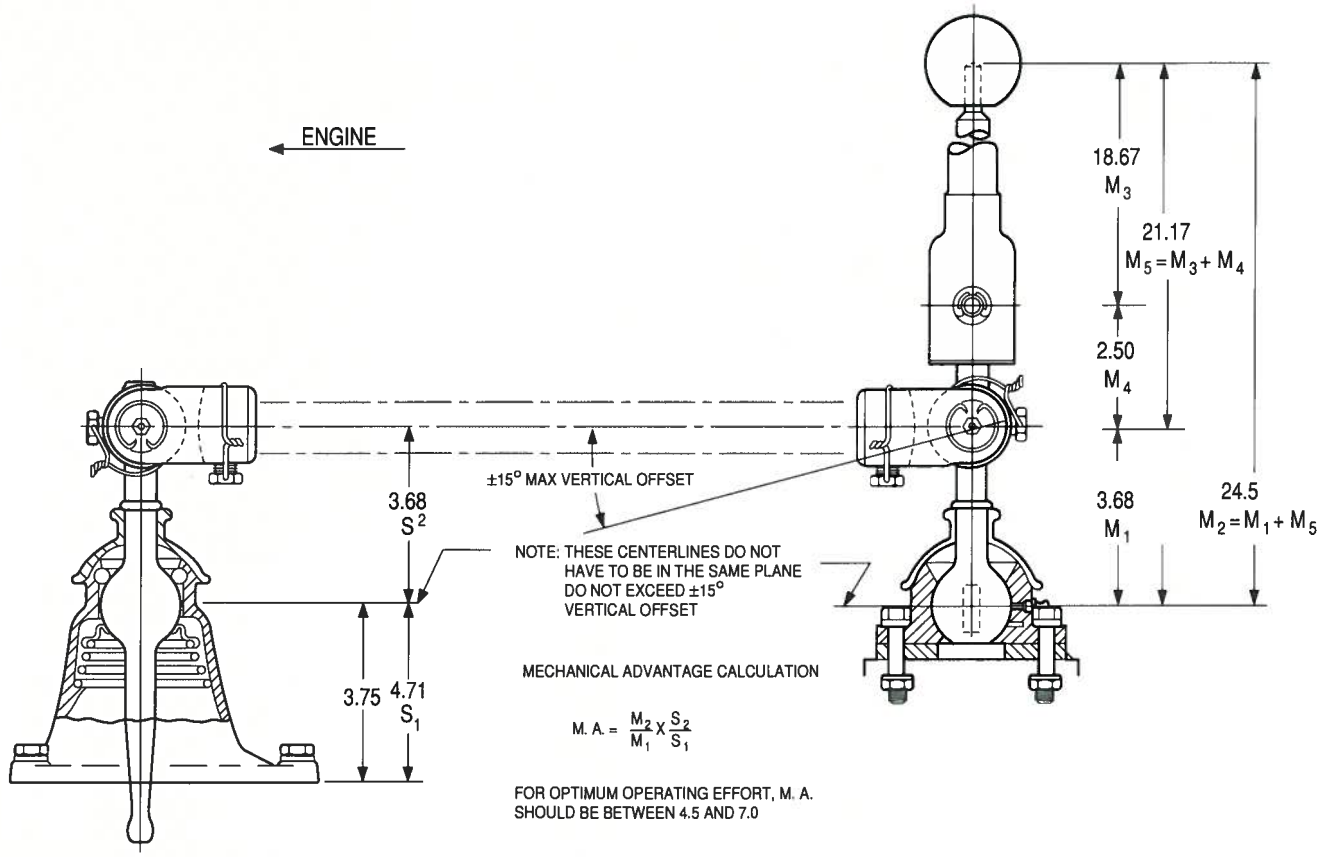

The RLC Control was designed for a conventional truck to eliminate the need for using a long severely bent shift lever when the shift lever location in the cab is not in the same location as the shift lever opening in the transmission.

For Additional Lever/Control Information Please See Lever/Control Illustrated List Form TRIP-0930

Forward Offset Installation

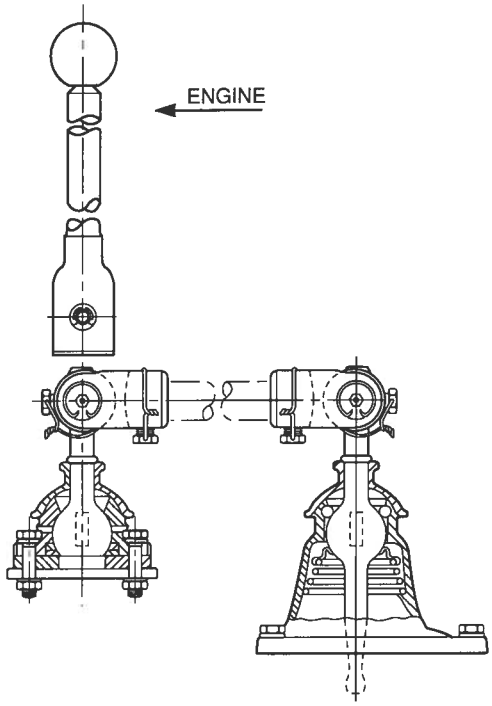

Rearward Offset Installation
Slave Unit Hi Tower Construction

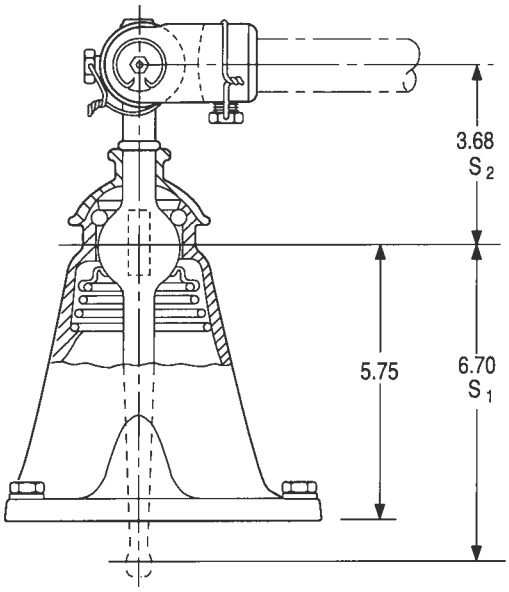

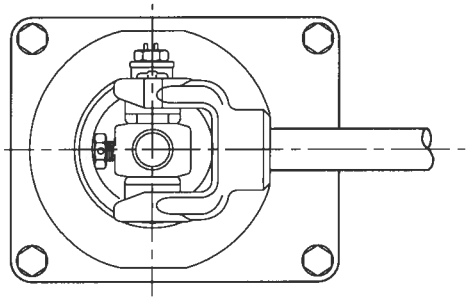

Reach Rod

Furnished by Customer

Note: May be made from 7/8" cold drawn

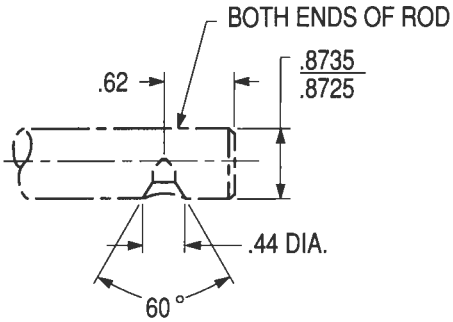

Rearward Offset Installation

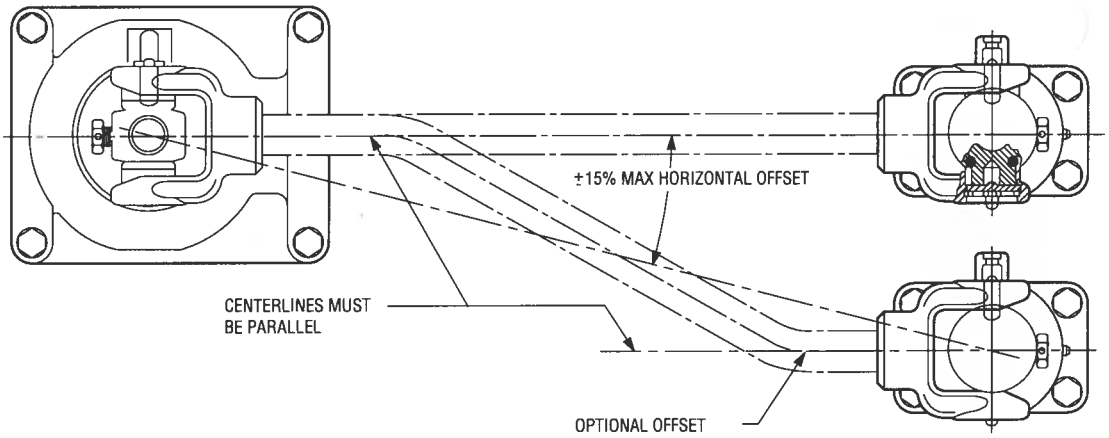

Available for These Transmission Models

Model Series	Countershaft Lower Left Only	Rear Housing	Rear Housing W/Cooler Hole
RT-8608L RT-11609A RTO-11609B RT-12609A RTO-12609B	K-2935	21154	21850
RT-14609A RTO-14609B	K-2935	21156	N/A
RTX-11609P RTX-11609R RTX-12609P RTX-12609R	K-2954	21154	21850
RTX-14609P RTX-14609R	K-2954	21156	N/A
RT-11610 RTO-11610 RT-12610 RTO-12610	K-2959	21154	21850
RT-14610 RTO-14610	K-2959	21156	N/A
RTO-11708LL RTO-14708LL	K-2935	21316	N/A
RT-11715 RTO-11715 RT-14715 RTO-14715 RT-15715 RTO-15715	K-2959	21316	N/A

Rear Housing

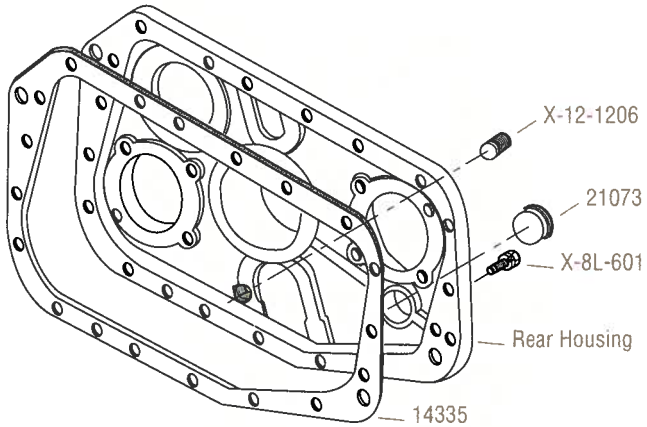

Thru Shaft Design vs. 6 and 8 Bolt

Feature	Benefit
1. Higher capacity than 6 bolt	Increased PTO Life
2. No gear shiming required	1. Quieter PTO operation 2. Faster PTO installation
3. Mounted at rear of transmission	1. Minimize the possibility of transmission oil leaks 2. Eliminates truck from interference with PTO, typically a problem associated with conventional 6 bolt PTO installations. 3. Potentially improved PTO drive shaft layouts.

NOTE: For specific PTO application recommendations contact the local Chelsea distributor.

Transmission without PTO installed

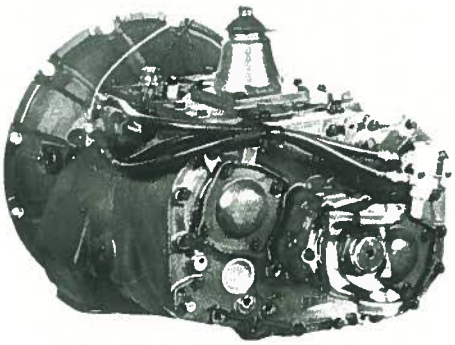

PTO installed with rear plate

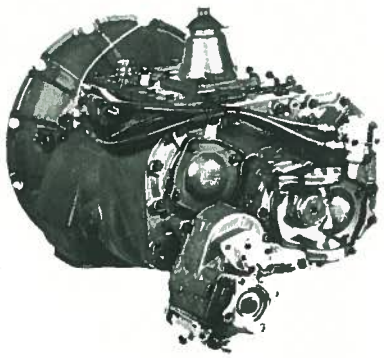

GASKET KITS	
MODEL APPLICATION	PART NO.
2-A-92	K-1568
RT-610, 6610, 8609	K-1931
RT-613, 6613, 7608LL SERIES	K-2110
T-8607, 11607, 14607 SERIES	K-1846
T-905, 11605 SERIES	K-1782
RT/RTO- 906, 9508, 958LL, 909, 9509, 910, 913, 9513, 915, 1110, 1157L/LL, 11509, 11607L/LL, 11608, 11608LL, 11609, 11610, 11613, 11615, 1258LL, 12509, 12510, 12513, 12515, 12609A, 12610, 14608, 14608LL, 14609, 14610, 14613, 14813, 14615, 15613, 15618, 11606	K-2199
RTLO-14613B, 14618A, 16618A, 12713, 14713, 16713, 14718, 16718, 18718	K-2199
RT/RTO/RTX- 11707LL, 11708LL, 11709, 12709, 13709, 14709, 16709, 11710, 12710, 13710, 14710, 11715, 14708LL, 14715, 15715, 11709MLL, 14709MLL SERIES	K-2061
RTLO-11610, 12610, 13610, 14610, 15610, 16610 SERIES	K-2295
AT-1202	K-1479
RT/RTO-9109, 11109, 12109, 13109, 14109, 16109 CEEMAT SERIES	K-2172
RTAO-11710, 12710, 13710, 14710, 15710, 16710AC AUTOSELECT	K-2860
RTLO-9118, 11118A-MT	K-2870
MID-RANGE	
FS-6106	K-1955
FS-5205	K-7030
390V, CL-550-FS-5005	K-2085
FS/FSO-8206	K-2465
FS-5106, 6105, 6205, 7206	K-2181
FS-6205, 6305, 5306, 6306	K-7028
280V, 280VHD	K-2136
CL-450, FS-4005, FS-4205	K-2143
AUX. SECTION ONLY	
RT/RTO- 906, 9508, 958LL, 909, 9509, 910, 913, 9513, 915, 1110, 11509, 11608, 11608LL, 11609, 11610, 11613, 11615, 12513, 12609, 12610, SERIES T-955, 1056, 11606	K-1603
RTLO-14613B, 14618, 16618, 12713, 14713, 16713, 14718, 16718, 18718, 9118, 11118	K-1603
RT/RTO-11707LL, 11708LL, 11715, 14708LL, 14715, 15715, 11709MLL, 14709MLL SERIES	K-2077
RT/RTO/RTX-11709, 11710, 12709, 12710, 13709, 13710, 14709, 14710, 16709 SERIES	K-2327

All the genuine Fuller Transmission parts you need. All the genuine quality you expect.
One part number assures you of easy ordering. One name, Fuller Transmissions, assures you of genuine quality.

Mid-Range Models

Model Application	Input Shaft	Basic Rebuild Kit
FS-4005, CL-450	1.375 or 1.50 input shaft	K-2120
FS-4005, CL-450	1.750 input shaft	K-2129
FS-4205	1.375 or 1.50 input shaft	K-2120
FS-4205	1.750 input shaft	K-2129
FS-5005	1.50 input shaft 2" mainshaft	K-2121
FS-5005	1.50 input shaft 1.75" mainshaft	K-2122
FS-5005	1.75 input shaft 2" mainshaft	K-2123
FS-5205	1.50 input shaft	K-7032
FS-5205	1.75 input shaft	K-7033
FS-6005, 6105		K-2131
FS-6205	1.75 input shaft	K-7035
FS-6305	1.75 input shaft	K-7035
FS-5106	1.50 or 1.75 input shaft	K-2041
FS-5306	1.50 or 1.75 input shaft	K-7052
FS-6206	1.50 or 1.75 input shaft	K-2041
FS-6306	1.50 or 1.75 input shaft	K-7052
FS-7206	1.75 input shaft	K-2180
CL-550	1.50 input shaft 1.75 mainshaft	K-2126
CL-550	1.50 input shaft 2.00 mainshaft	K-2124
CL-550	1.75 input shaft 2.00 mainshaft	K-2125
280V SERIES		Minor Kit K-2127 Major Kit K-2167
280 VHD SERIES		Minor Kit K-2128 Major Kit K-2166

Heavy Duty Models

Model Application	Clutch Type Input Shaft	Basic Overhaul Kit	Basic Rebuild Kit
5 SPEED			
T-905 SERIES	PULL-1.75	K-1054	K-1852
	PUSH-1.75	K-1055	K-1852
	PULL-2.00	K-1056	K-1852
T-11605 SERIES	PULL-1.75	K-1983	K-1873
	PULL-2.00	K-1984	K-1873
6 SPEED			
T-1056 SERIES	PULL-1.75	K-1071	K-1857
	PULL-2.00	K-1072	K-1857
T-1056A	PULL-1.75	K-1073	K-1857
	PULL-2.00	K-1074	K-1857
T-11606	PULL-1.75	K-1755	K-1864
	PULL-2.00	K-1756	K-1864
7 SPEED			
T-955 SERIES	PULL-1.75	K-1056	K-2780
	PUSH-1.75	K-1066	K-2780
	PULL-2.00	K-1067	K-2780
T-8607 SERIES	PULL-2.00	K-1765	K-1877
T-11607	PULL-2.00	K-1982	K-1878
T-14607	PULL-2.00	K-1982	K-1878
8 SPEED			
RT-9508 SERIES	PULL-1.75	K-2750	K-2780
	PUSH-1.75	N/A	K-2780
	PULL-2.00	K-2760	K-2780
RTO-1157DL	PULL-2.00	K-1076	K-1859
RTO-11607L	PULL-2.00	K-1980	K-1866
RT-11608 SERIES	PULL-1.75	K-2345	K-2283
	PULL-2.00	K-2761	K-2283
RT-14608 SERIES	PULL-2.00	K-1971	K-1870
9 SPEED			
RT-8608L	PULL-1.75	K-2345	K-2283
	PULL-2.00	K-2761	K-2283
RT-8609 SERIES	PULL-2.00	K-1764	K-1876
RT-909/9509 SERIES	PULL-1.75	K-2750	K-2780
	PUSH-1.75	N/A	K-2780
	PULL-2.00	K-2760	K-2780
RT-11509 SERIES	PULL-2.00	K-1063	K-1858
RTO-1157DLL	PULL-2.00	K-1077	K-1860
RTO-11607DLL	PULL-2.00	K-1981	K-1867
RTO-11707LL	PULL-2.00	K-1986	K-2045
RT-11609 SERIES	PULL-1.75	K-2345	K-2283
	PULL-2.00	K-2761	K-2283
RT-12709	PULL-2.00	K-1996	K-2049
RTX-12709	PULL-2.00	K-2763	K-2284
RT-13709	PULL-2.00	K-2762	K-2284
RTX-13709	PULL-2.00	K-2763	K-2284
RT-14609 SERIES	PULL-2.00	K-1971	K-1870

Eaton/Fuller Basic Overhaul and Rebuild Kits (continued)

Model Application	Clutch Type Input Shaft	Basic Overhaul Kit	Basic Rebuild Kit
9 SPEED (CONTINUED)			
RT/RTX-14709 SERIES	PULL-2.00	K-1999	K-2275
RTX-16709 SERIES	PULL-2.00	K-1999	K-2275
RT-13609	PULL-2.00	K-2344	K-2282
RTX-13609	PULL-2.00	K-2343	K-2282
RT-6609		N/A	K-2048
RTO-13707MLL/DLL	PULL-2.00	K-2854	K-2855
9 SPEED CEEMAT			
RT/RTO-9109A/B-AT		K-2836	K-2290
RT/RTO-11109A/B-AT/ATS		K-2775	K-2778
RT/RTO-11109A/B-ATR		K-2777	K-2290
RT/RTO-11109A/B-ATE		K-2776	K-2289
RT/RTO-12109A/B-AT		K-2777	K-2290
RTO-13109A/B-AT		K-2775	K-2778
RTO-13109A/B-ATE		K-2776	K-2289
RT/RTO-14109A/B-AT/ATS		K-2775	K-2778
RT/RTO-14109A/B-ATE		K-2776	K-2289
RTO-16109A/B-AT		K-2905	K-2904
RTO-16109A/B-ATE		K-2903	K-2902
18 SPEED CEMT			
RTLO-9118-MT		K-2872	K-2871
RTLO-11118-MT		K-2873	K-2871
10 SPEED			
RT-610/6610 SERIES	ALL TYPES	N/A	K-1850
RT-7608LL SERIES	PULL-1.75	K-1995	K-2047
RT-910 SERIES	PULL-1.75	K-2750	K-2780
	PUSH-1.75	N/A	K-2780
	PULL-2.00	K-2760	K-2780
RTO-958LL	PULL-1.75	K-2750	K-2780
	PUSH-1.75	N/A	K-2780
	PULL-2.00	K-2760	K-2780
RT-1110 SERIES	PULL-2.00	K-1063	K-1858
RT-11610 SERIES	PULL-1.75	K-2345	K-2283
	PULL-2.00	K-2761	K-2283
RTO-11608LL	PULL-1.75	K-2345	K-2283
	PULL-2.00	K-2761	K-2283
RTO-11708LL	PULL-2.00	K-2763	K-2284
RT-11710B	PULL-2.00	K-1996	K-2049
RTX-11710B/C	PULL-2.00	K-2763	K-2284
RT-12510 SERIES	PULL-2.00	K-1064	K-1861
RTO-1258LL	PULL-2.00	K-1079	K-1863
RT-12610 SERIES	PULL-1.75	K-2345	K-2283
	PULL-2.00	K-2761	K-2283
RT-12710B	PULL-2.00	K-1996	K-2049
RTX-12710B/C	PULL-2.00	K-2763	K-2284
RT-13710B	PULL-2.00	K-2762	K-2284
RTX-13710B/C	PULL-2.00	K-2763	K-2284
RTO-14608LL	PULL-2.00	K-1979	K-1872
RT-14610 SERIES	PULL-2.00	K-1971	K-1870
RTLO-14610A	PULL-2.00	K-2000	K-2276
RTO-14708LL	PULL-2.00	K-1992	K-2043

Model Application	Clutch Type Input Shaft	Basic Overhaul Kit	Basic Rebuild Kit
10 SPEED (CONTINUED)			
RT-14710B	PULL-2.00	K-2335	K-2277
RTO-14710B	PULL-2.00	K-2336	K-2277
RTX-15/16710	PULL-2.00	K-2336	K-2277
RTLO-11/12-13610B	PULL-2.00	K-2764	K-2772
RTLO-14/15610B	PULL-2.00	K-2765	K-2773
RTLO-16610B	PULL-2.00	K-2766	K-2764
10 SPEED AUTOSELECT			
RTAO-11/12/13710-AC	PULL-2.00	K-2862	K-2861
RTAO-14/15/16710-AC	PULL-2.00	K-2837	K-2838
10 SPEED AUTOSHIFT			
RTAO-14710-AS	PULL-2.00	K-2837	K-2838
11 SPEED			
RTO-11/14709MLL	PULL-2.00	K-2848	K-2847
13 SPEED			
RT-613/16613 SERIES	ALL TYPES	N/A	K-1851
RT-913 SERIES	PULL-1.75	N/A	K-1855
	PULL-2.00	K-1047	K-1855
RT-9513 SERIES	PULL-1.75	K-2750	K-2780
	PUSH-1.75	N/A	K-2780
	PULL-2.00	K-2760	K-2780
	RANGE SECT.	K-1555	K-1555
RT-11613 SERIES	PULL-1.75	K-2345	K-2283
RT-11813 SERIES	PULL-2.00	K-2761	K-2283
	RANGE SECT.	K-1555	K-1555
RT-11613 SERIES RT-11813 SERIES WITH TAPERED BEARINGS	PULL-2.00	K-2342	K-2281
RT-12513 SERIES	PULL-2.00	K-1058	K-1862
	RANGE SECT.	K-1554	K-1554
RTLO-12713 SERIES	PULL-2.00	K-2767	K-2285
	RANGE SECT.	K-2768	K-2768

Eaton/Fuller Basic Overhaul and Rebuild Kits (continued)

Model Application	Clutch Type Input Shaft	Basic Overhaul Kit	Basic Rebuild Kit
13 SPEED (CONTINUED)			
RT-14613 SERIES	PULL-2.00	K-1972	K-1871
RT-14813 SERIES	RANGE SECT.	K-1554	K-1554
RT-14613 SERIES	PULL-2.00	K-2341	K-2280
RT-14813 SERIES WITH TAPERED BEARINGS	RANGE SECT.	K-2340	K-2340
RTLO-14713 SERIES	PULL-2.00	K-2758	K-2286
	RANGE SECT.	K-2759	K-2759
RT-15613 SERIES	PULL-2.00	K-1972	K-1874
RT-15813 SERIES	RANGE SECT.	K-2767	K-1874
RT-15613 SERIES	PULL-2.00	K-2341	K-2280
RT-15813 SERIES WITH TAPERED BEARINGS	RANGE SECT.	K-2340	K-2340
RTLO-16713	PULL-2.00	K-2770	K-2287
	RANGE SECT.	K-2769	K-2769
15 SPEED			
RT-915 SERIES	PULL-1.75	K-2750	K-2780
	PULL-2.00	K-2760	K-2780
RT-11615 SERIES	PULL-1.75	K-2345	K-2283
	PULL-2.00	K-2761	K-2283
RT-11715	PULL-2.00	K-2762	K-2284
RTO-11715	PULL-2.00	K-1988	K-2284
RT-12515 SERIES	PULL-2.00	K-1079	K-1863
RT-14615 SERIES	PULL-2.00	K-1979	K-1872
RT-14715	PULL-2.00	K-1991	K-2043
RTO-14715	PULL-2.00	K-1992	K-2043
RT-15615 SERIES	PULL-2.00	K-1763	K-1875
RT-15715	PULL-2.00	K-1991	K-2043
RTO-15715	PULL-2.00	K-1992	K-2043
18 SPEED			
RTO-15618	PULL-2.00	K-1994	K-2046
	RANGE SECT.	K-1993	K-1993
RTLO-14/16618	PULL-2.00	K-2337	K-2278
	RANGE SECT.	K-2338	K-2338
RTLO-14/16718	PULL-2.00	K-2779	K-2288
	RANGE SECT.	K-2769	K-2769
RTLO-18718	PULL-2.00	K-2866	K-2865
	RANGE SECT.	K-2769	K-2769

Model Application	Part Number
RT-6609	K-2190
RT-610, 6610	K-1512
RT-613, 6613	K-1513
RT-7608LL	K-2109
T-8607	K-1809
RT-8609	K-1808
T-905, 11605	K-1503
RT-9508	K-1733
RT-9509, 910	K-1500
RT-915	K-1502
T-955	K-1505
RTO-958LL	K-1504
RTO-913, 9513	K-1501
T-1056, 11606	K-1514
RT-11509, 1110	K-1510
RTO-1157L	K-1805
RTO-1157LL	K-1806
RTO-11608, 11609, 11610, 12609A, 12610	K-1790
RTO-11608LL, RT-11615	K-1799
RT-11613	K-1791
RTO-11707LL, 13707LL	K-2746
T-11607	K-1807
RTO-11607L	K-1803
RTO-11607LL	K-1804
RTAO-11/12/13/14/15/16/710-AC	K-2410
RTLO-18718	K-2863
RTO-11/14709MLL	K-2852
RTLO-12/14/16713, 14/16718	K-2801
RTLO-14/15/16610B	K-2756
RTLO-11/12/13610B	K-2755
RT/RTX-13609	K-2745
RT/RTO-9109, 12109AT, 11109ATR	K-2829
RT/RTO-11/13/14/16109AT/ATS/ATE	K-2830
RT/RTO-11608LL/11715	K-2063
RTO-1258LL	K-1520
RT-12509	K-1506
RT-12510	K-1507
RT-12513	K-1508
RT-12515	K-1509

Model Application	Part Number
RTO-14608LL	K-1802
RT-14608, 14609, 14610	K-1800
RT-14613, 15613	K-1793
RT-14615, 15615	K-1801
RT/RTO-14708LL, 14715, 15715	K-2064
RTO-15618, RTLO-14/16618	K-2408
RT/RTX-11/12/13/14/16709, 11/12/13/14/15/16710	K-2410
RTLO-14610A	K-2299
RTLO-14613A	K-2433
RTLO-14/16618A	K-2408
MID-RANGE	
FS-4005/4205	K-2144
FS-5005	K-2132
FS-5205	K-7031
FS-6005/6105/6205/6305	K-7026
FS-5106/6206	K-7026
FS-5306/6306	K-7053
FS-6105	K-1810
FS-7206	K-2182

Transmission Lubricant Capacities

Note: Capacity of transmissions equipped with PTOs or oil coolers are greater than capacities listed.

These values are approximate—always use the fill hole as the final reference.

Eaton® Fuller® Transmission Oil Capacities

Auxiliary Transmissions	Pints	Liters
AT-1202	11	5
2-A-92	12	6

Mid-Range Transmissions	Pints	Liters
FS-4005	9.5	4.5
FS-4205	12.5	6.5
FS-5005	10.5	5
FS-5205	10.5	5
FS-6105/6005	19	9
FS-6205/6305	19	9
FS-5106	18	9
FS-5306	18	9
FS-6106	19	9
FS-6206	18	9
FS-6306	18	9
FS-7206	20	10
FS-8206	20	9.5

Eaton® Fuller® Transmission Oil Capacities

Twin Countershaft Models	Pints	Liters
5 Speeds		
905	22	10
11605	22	10
6 Speeds		
955AL	25	12
906	26	12
1056AA	29	14
11606	26	12
7 Speeds		
955ALL	28	13
8607	36	17
11607	36	17
14607	37	17
8 Speeds		
1157DL	27	13
11607L	28	13
9508	25	12
11608	26	12
14608	28	13
9 Speeds		
9509	25	12
11509	25	12
12509	25	12
1157DLL	29	14
6609	12	6
8609	15	7
8608L	27	13
11607LL	31	15
11707LL	28	13
11707DLL	28	13
13707DLL	28	13
13707MLL	28	13
11609	27	13
12609	27	13
13609	27	13
14609	27	13
11709	27	13
12709	27	13
13709	27	13
14709	27	13
16709	27	13
10 Speeds		
958LL	28	13
1258LL	28	13
7608LL	19.5	9
11608LL	29	14
14608LL	29	13
11708LL	28	13
14708LL	29	14
12510	25	12
610	12	6
6610	12	6
910	25	12
1110	25	12

Twin Countershaft Models	Pints	Liters
11610	26	12
12610	26	12
14610	26	12
RTLO-11610	28	13
RTLO-12610	28	13
RTLO-13610	28	13
RTLO-14610	28	13
RTLO-15610	28	13
RTLO-16610	28	13
11710	26	12
12710	26	12
13710	26	12
14710	26	12
15710	26	12
16710	26	12
11 Speeds		
11709MLL	28	13
14709MLL	28	13
13 Speeds		
12513	27	13
613	16	8
6613	16	8
9513	27	13
11613	29	14
14613	29	14
15613	29	14
RTLO-14613	28	13
RTLO-12713	28	13
RTLO-14713	28	13
RTLO-16713	28	13
15 Speeds		
915	28	13
12515	28	13
11615	28	13
14615	30	14
15615	30	14
11715	28	13
14715	28	13
15715	28	13
18 Speeds		
RTLO-14618	28	13
RTLO-16618	28	13
RTLO-14718	28	13
RTLO-16718	28	13
RTLO-18718	28	13
CEEMAT®		
11109-AT	88	41.6
11109-ATE	89	42.1
13109-AT	88	41.6
13109-ATE	89	42.1
14109-AT	88	41.6
14109-ATE	89	42.1
16109-ATE	89	42.1

Using Model Designation or Nomenclature

The model designation or nomenclature assigned to a transmission model provides information concerning transmission torque capacity, forward speeds, ratio set, shift bar housing and other provisions and options. Use the following guidelines to identify your transmission model designation. This information is useful when ordering parts.

Heavy Duty Transmission - Nomenclature

R T - 1 2 6 0 9 A

Eaton® Fuller® Model Designation Prefix
See options below:

Prefix	Definition
RT	Roadranger® Twin Countershaft
RTF	w/ Forward Shift Bar Housing
RTO	w/ Overdrive
RTOO	w/ Double Overdrive
RTOF	w/ Overdrive and Forward Shift Bar Housing
RTOOF	w/ Double Overdrive and Forward Shift Bar Housing
RTX	w/ Overdrive and Direct Shift Pattern
RTXF	w/ Overdrive, Direct Shift Pattern and Forward Shift Bar Housing

Ratio Set

Forward Speeds

6 = "Multi-Mesh" Gearing

7 = Helical Auxilary Gearing and "Multi-Mesh" Front Gearing

This (x) 100 = Nominal Torque Capacity

L or LL notation used here indicates one (L) or two Low (LL) gears in addition to designated speeds

"Super" Transmissions

R T L O F* - 1 4 6 1 0 A

Roadranger®
Twin Countershaft

Low-Inertia

0 = Overdrive

* F = Forward Mounted Shift Tower

Ratio Set

Forward Speeds

6 = "Multi-Mesh" Gearing

This (x) 100 = Nominal Torque Capacity

* Transmission nomenclature may indicate a Standard (RTLO) or Forward (RTLOF) Mounted Shift Tower.

Using Model Designation or Nomenclature

The model designation or nomenclature assigned to a transmission model provides information concerning transmission torque capacity, forward speeds, ratio set, shift bar housing and other provisions and options. Use the following guidelines to identify your transmission model designation. This information is useful when ordering parts.

Mid-Range Transmission - Nomenclature

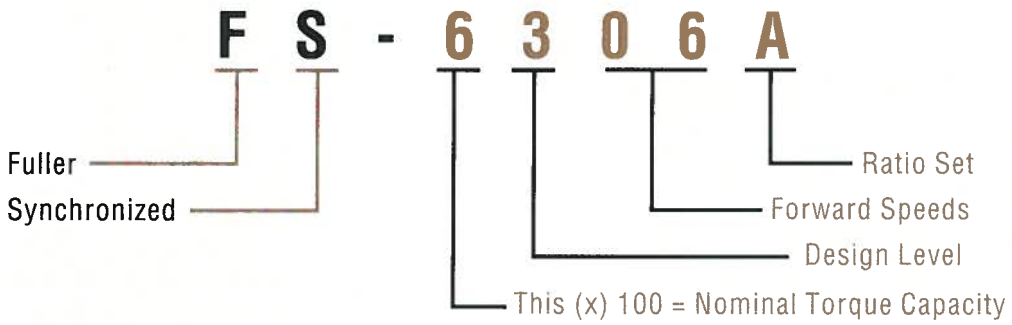

Important:
When repairing or rebuilding a Fuller Transmission never remove or deface the serial number plate. A missing or defaced plate could result in loss of the original transmission warranty. The transmission model and serial number are very useful in obtaining the correct parts for repair or rebuild.
A new blank serial plate (Fuller part no. 57000) is available and may be stamped and used to replace an accidentally defaced transmission serial plate.
Note: Prior to submerging the case into caustic chemicals for cleaning, remove the aluminum serial plate as it may dissolve on contact with such chemicals.

Locating Transmission Tag and Identifying Model Designation

Transmission model designation (i.e. RT-12609A), and other transmission identification information, are stamped on the transmission tag. To identify the transmission model designation (nomenclature), locate the tag on the transmission and then locate the model designation number as shown.

Location of transmission tag and model designation number

Heavy Duty

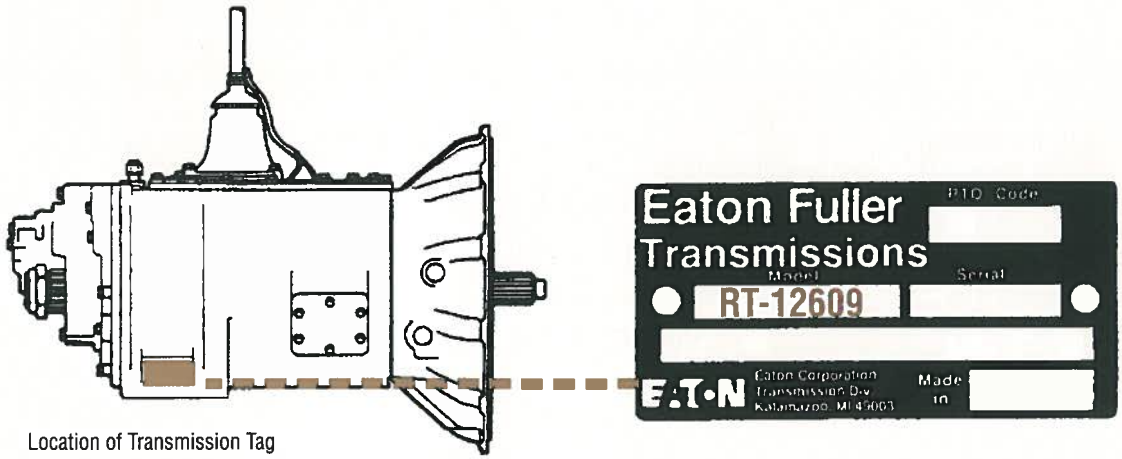

Location of Transmission Tag

Mid-Range

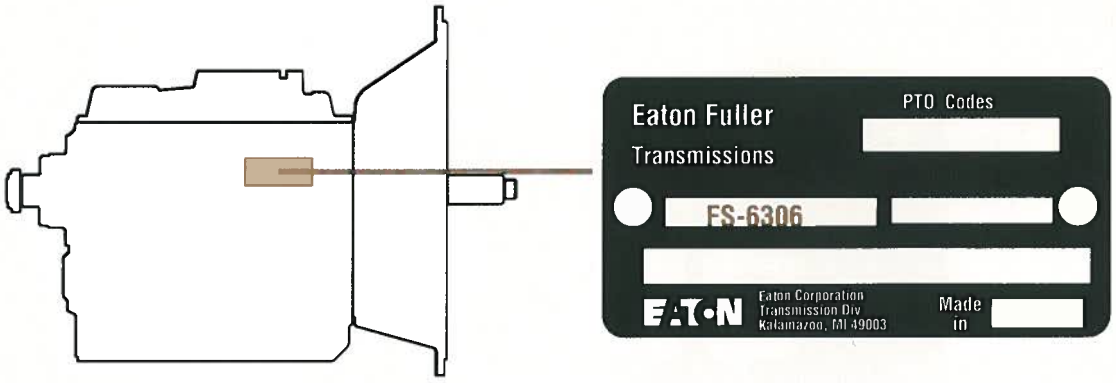

Full Size Examples

7-8-9-10-13-15 SPEEDS

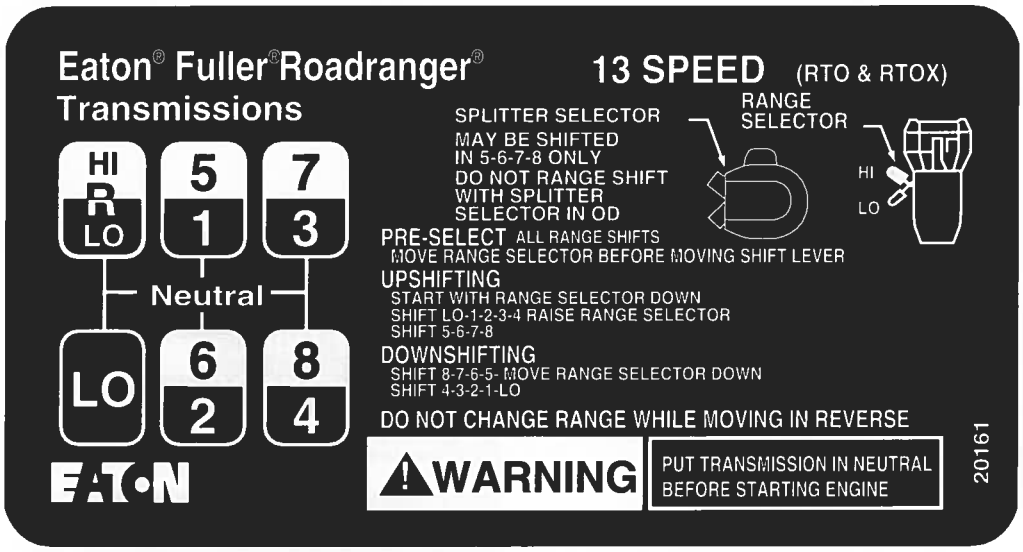

5-6 SPEEDS

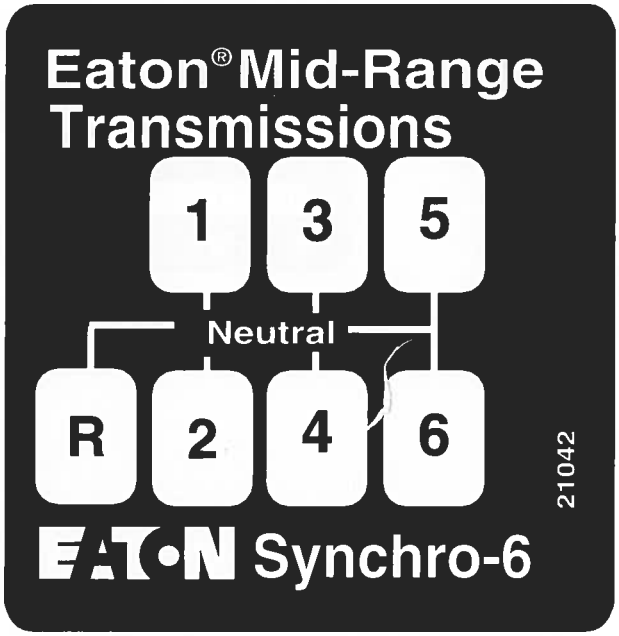

Model Series	
Synchro-5	21789

FS
4005
4205
5005
5205
6105
6205
6305

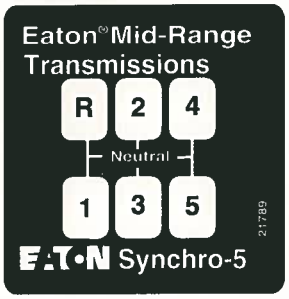

Model Series	
Synchro-6	22387

FS
5106
5306
6206
6306
7206
8206

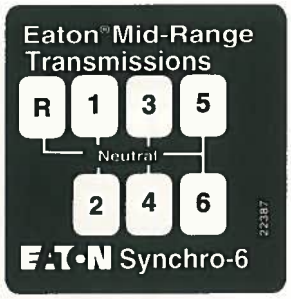

Model Series	
FS	21042

6106

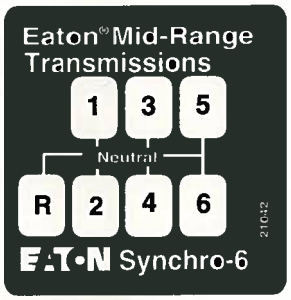

Shift Labels

Model Series		
T/TO 905 11605	19601	19602

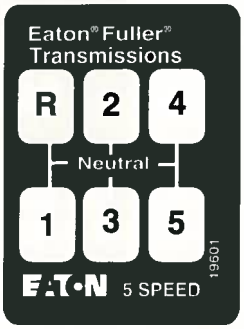

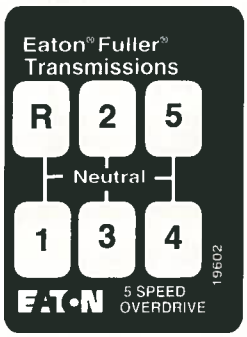

Model Series	
T 1056A 1056AA 11606	19603

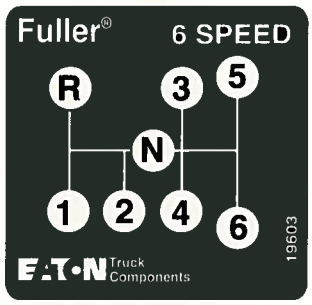

Model Series

T/TX
8607
11607
14607

19958

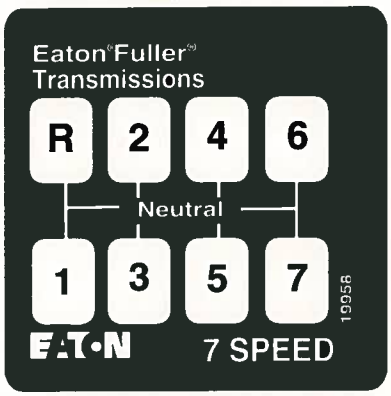

Model Series

RTO/RTOF
1157DL
11607L

20394

Model Series

RTO/RTOF
1157DLL
11607LL
11707LL
13707LL
11707DLL
13707DLL
13707MLL

20464

22090

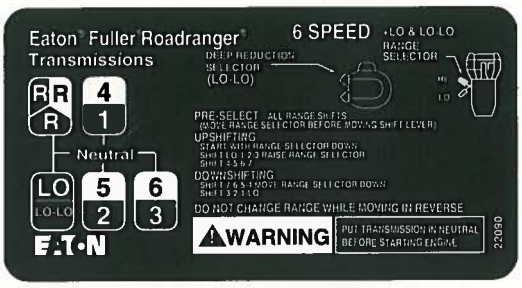

Shift Labels

Model Series

RT/RTF
9508
11608
14608

20396

Model Series

RTO/RTOF
958LL
1258LL
11608LL
11708LL
14608LL
14708LL

20465

Model Series

RTX/RTXF
1258LL
7608LL
11608LL
11708LL
14608LL
14708LL

20466

Model Series

RT/RTF
RTX/RTXF
6609
8609
9509
11509
11609
12509
12609
11709
14609
12709
13609
13709
14709
16709
8608L

20398

21250 SPECIAL SERVICE

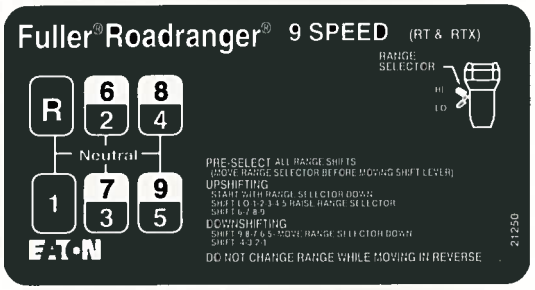

Model Series

RTX "P", "R"
11609
12609
14609
13609

21503

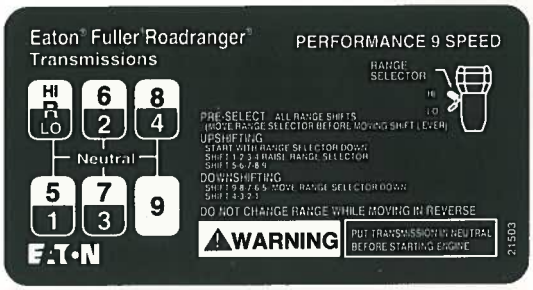

Model Series

RTO/RTOF
9509
11509
11609
11709
12509
12609
12709
14609
14709

20399

Shift Labels

Model Series

TA
4510

17013

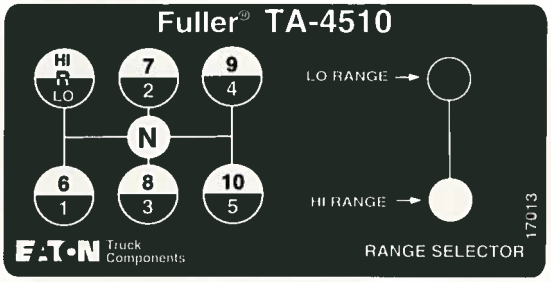

Model Series

RT/RTX/RTXF
610
6610
910
1110
11710
12610
12710
13710
14610
14710
11610
15710
16710

20400

Model Series

RTO/RTOF
610
6610
910
1110
12610
14610
11610

20401

Model Series

RTLO
14610
11610
12610
13610
15610
16610

23205

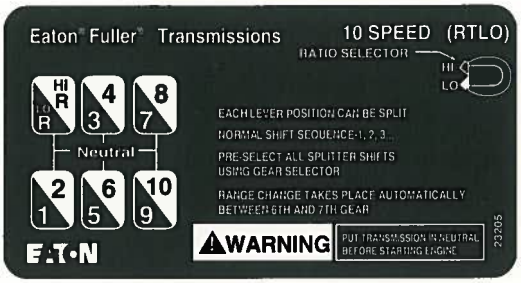

Model Series

RT
613
6613

19303 (W/3 Position Selector Valve)

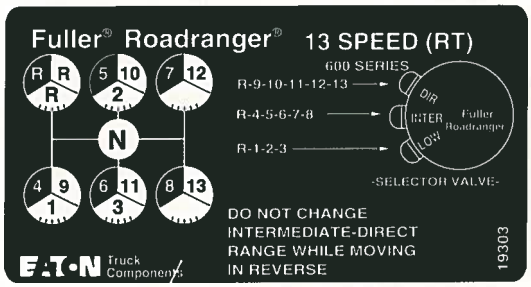

21756

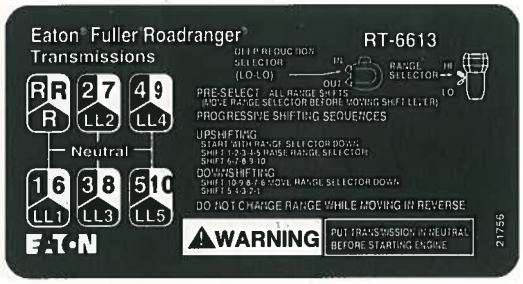

Model Series

RTO
613
6613

19304 (W/3 Position Selector Valve)

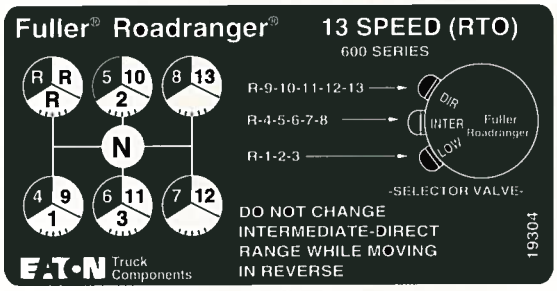

21817

Shift Labels

Model Series

RT/RTO/RTOO
9513
(W/3 Position
Selector Valve)

17075

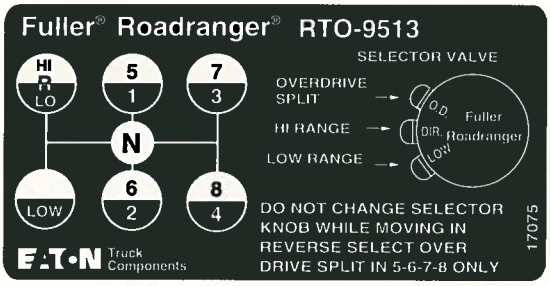

17076

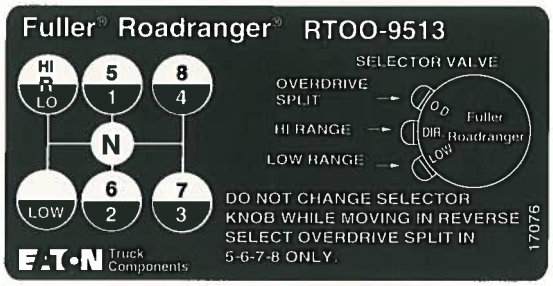

Model Series

RT/RTO
12513
(W/3 Position
Selector Valve)

17023

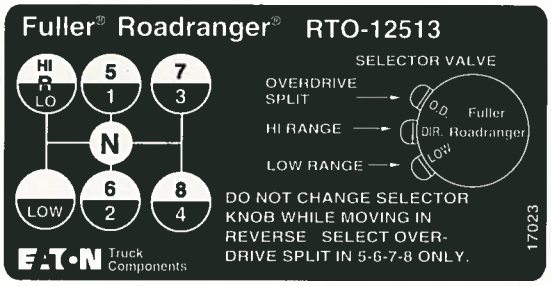

Model Series

RT/RTF
9513
11613
12513
14613
15613

20160

Model Series

RTO/RTOF
RTOX/RTOXF
9513-11613
11813-12513
14613-14813
15613-15813

20161

20393

Model Series

RTOO/RTOOF
9513
11613
14613

20162

Model Series

RTLO/RTO/RTOX
14613
16713
11613
15613
14713
12713

4300764

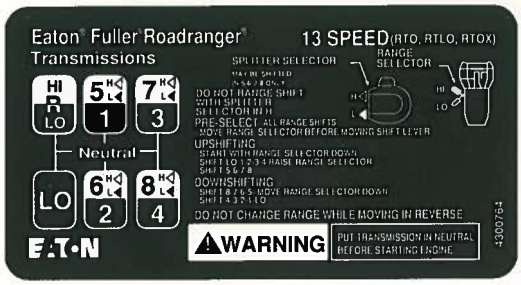

Shift Labels

Model Series

RT/RTF
RTX/RTXF
915
11615
11715
12515
14615
14715
15615
15715

20468

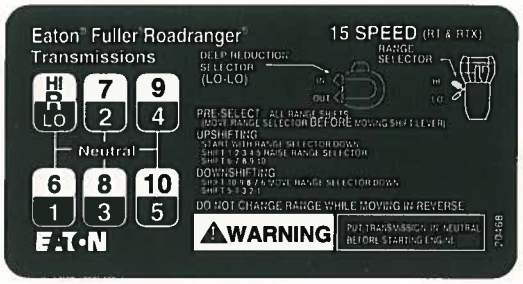

Model Series

RTO/RTOF
915
11615
11715
12515
14615
14715
15615
15715

20467

Model Series

RTO/RTLO
15618
16618
14618

21628

Model Series

RTO/RTOF
11709MLL
14709MLL

4302441

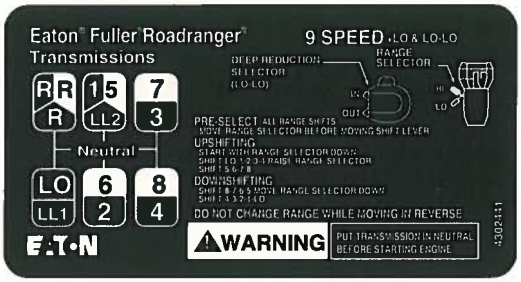

Model Series

2A92

18457

Model Series

AT
1202

18457

18524

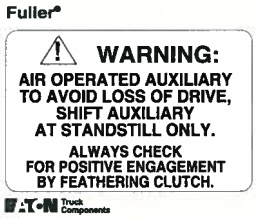

18544

Shift Labels — Automated Models

Model Series

RTAO-10710B/C-AS
12710B/C-AS
14710B/C-AS
16710B/C-AS

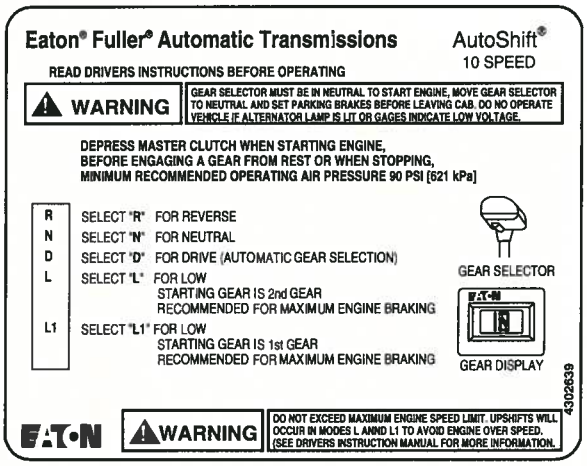

Model Series

RTAO-14710B-AC

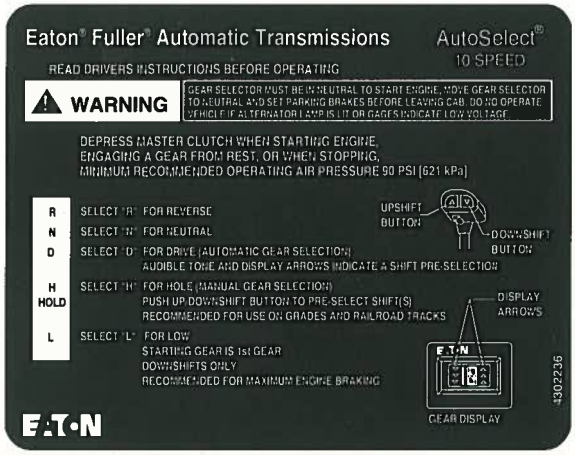

Model Series

RTO-9109-AT
11109-ATR
11109-ATS
12109-AT
14109-ATS

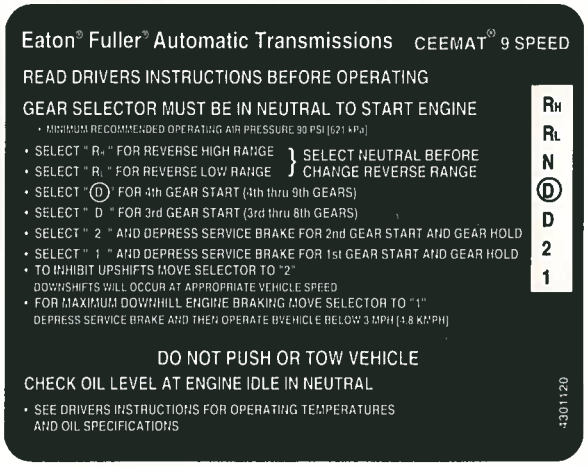

All Models

21075

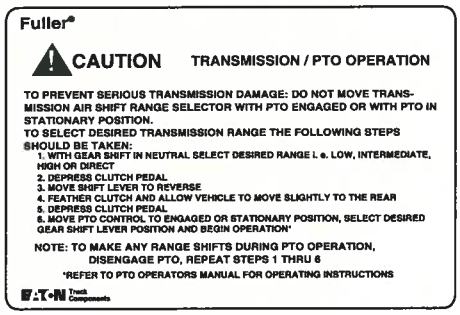

18683

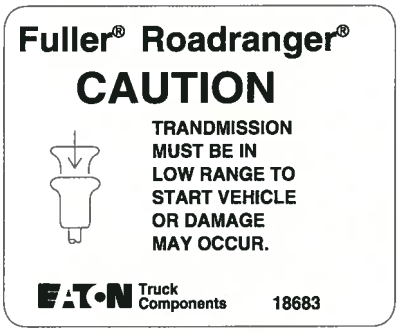

17011

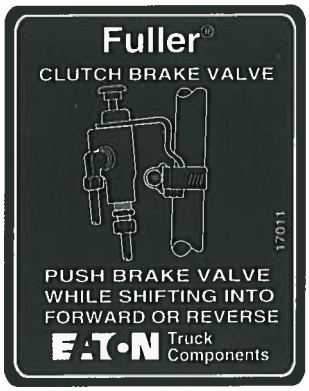

7L-8-9-10-18 Speeds

20446

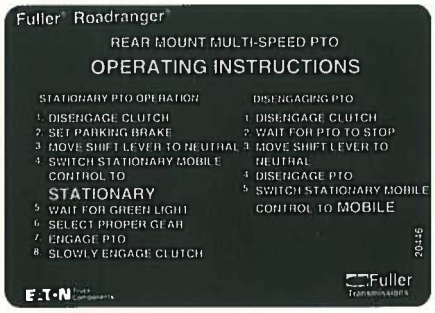

7LL-8LL-15 Speeds

20447

13 Speeds

20448

Eaton Corporation
Truck Components Operations - North America
P.O. Box 4013
Kalamazoo, Michigan 49003

EATON

Eaton® Roadranger® Service keeps you on the road.

For more information contact your regional Eaton Roadranger sales and service office at 1-800-826-HELP, (826-4357) 24 hours a day, anywhere in North America

This item is a part of the Eaton® ***InfoLink***™ product information system.

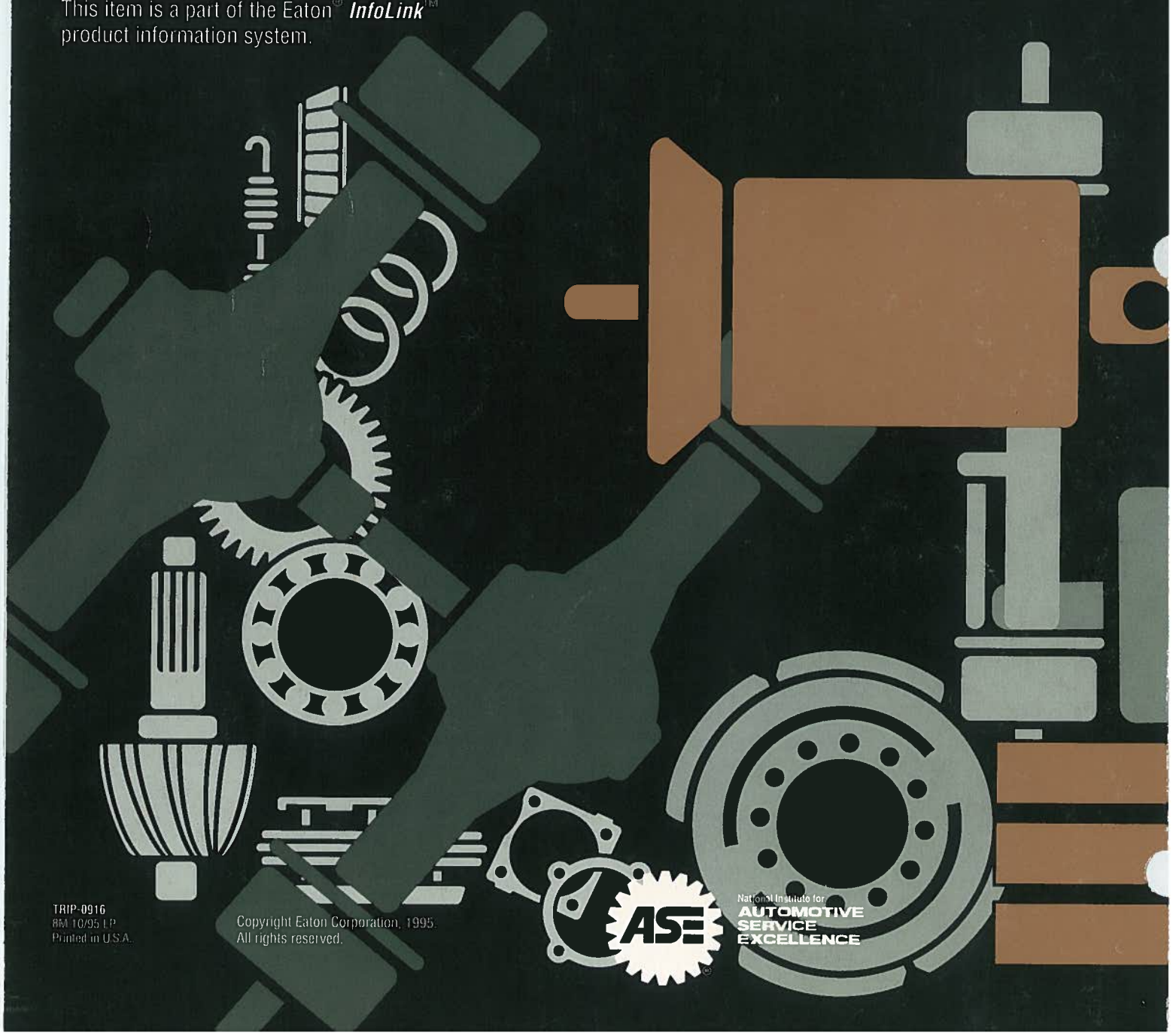

TRIP-0916
8M 10/95 LP
Printed in U.S.A.

Copyright Eaton Corporation, 1995.
All rights reserved.

National Institute for AUTOMOTIVE SERVICE EXCELLENCE