Column1	Column2	Column3	Column4	Column5	Column6	Column7
12" WIDTH (8 tubes)						
VERTICALSQUARE FEET	HORIZONTALSQUARE FEET	LENGTHIN. / (mm)	MODELNUMBER	(S) 316STAINLESS	(T)TITANIUM	SHIP WT.LBS. / (kg)
4.5	3.8	24(610)	8-24**			12(5.4)
5.6	4.8	30(762)	8-30**			14(6.4)
6.6	5.8	36(914)	8-36**			16(7.3)
8.7	7.9	48(1219)	8-48**			18(8.2)
10.8	10.0	60(1524)	8-60**			23(10.4)
12.9	12.1	72(1829)	8-72**			28(12.7)
15.0	14.2	84(2134)	8-84**			31(14.1)
17.1	16.3	96(2438)	8-96**			34(15.4)
19.2	18.4	108(2743)	8-108**			38(17.2)
21.3	20.5	120(3048)	8-120**			41(18.6)
23.4	22.6	132(3353)	8-132**			46(20.9)
25.5	24.7	144(3658)	8-144**			49(22.2)

Column1	Column2	Column3	Column4	Column5	Column6	Column7
18" WIDTH (12 tubes)						
VERTICALSQUARE FEET	HORIZONTALSQUARE FEET	LENGTHIN. / (mm)	MODELNUMBER	(S) 316STAINLESS	(T)TITANIUM	SHIP WT.LBS. / (kg)
6.8	5.6	24(610)	12-24**			15(6.8)
8.4	7.2	30(762)	12-30**			18(8.2)
9.9	8.8	36(914)	12-36**			21(9.5)
13.1	11.9	48(1219)	12-48**			26(11.8)
16.2	15.1	60(1524)	12-60**			32(14.5)
19.4	18.2	72(1829)	12-72**			37(16.8)
22.5	21.3	84(2134)	12-84**			42(19.1)
25.7	24.5	96(2438)	12-96**			47(21.3)
28.8	27.6	108(2743)	12-108**			53(24)
31.9	30.8	120(3048)	12-120**			58(26.3)
35.1	33.9	132(3353)	12-132**			64(29)
38.2	37.0	144(3658)	12-144**			69(31.3)

Column1	Column2	Column3	Column4	Column5	Column6	Column7
24" WIDTH (16 tubes)						
VERTICALSQUARE FEET	HORIZONTALSQUARE FEET	LENGTHIN. / (mm)	MODELNUMBER	(S) 316STAINLESS	(T)TITANIUM	SHIP WT.LBS. / (kg)
9.1	7.5	24(610)	16-24**			19(8.6)
11.2	9.6	30(762)	16-30**			23(10.4)
13.3	11.7	36(914)	16-36**			28(12.7)
17.5	15.9	48(1219)	16-48**			33(15)
21.6	20.1	60(1524)	16-60**			40(18.1)
25.8	24.3	72(1829)	16-72**			47(21.3)
30.0	28.4	84(2134)	16-84**			54(24.5)
34.2	32.6	96(2438)	16-96**			61(27.7)
38.4	36.8	108(2743)	16-108**			69(31.3)
42.6	41.0	120(3048)	16-120**			76(34.5)
46.8	45.2	132(3353)	16-132**			82(37.2)
51.0	49.4	144(3658)	16-144**			88(39.9)

Column1	Column2	Column3	Column4	Column5	Column6	Column7
30" WIDTH (20 tubes)						
VERTICALSQUARE FEET	HORIZONTALSQUARE FEET	LENGTHIN. / (mm)	MODELNUMBER	(S) 316STAINLESS	(T)TITANIUM	SHIP WT.LBS. / (kg)
11.3	9.4	24(610)	20-24**			22(10)
14.0	12.0	30(762)	20-30**			28(12.7)
16.6	14.6	36(914)	20-36**			33(15)
21.8	19.9	48(1219)	20-48**			40(18.1)
27.1	25.1	60(1524)	20-60**			48(21.8)
32.3	30.3	72(1829)	20-72**			58(26.3)
37.5	35.6	84(2134)	20-84**			68(30.8)
42.8	40.8	96(2438)	20-96**			75(34)
48.0	46.0	108(2743)	20-108**			83(37.7)
53.2	51.3	120(3048)	20-120**			92(41.7)
58.5	56.5	132(3353)	20-132**			100(45.4)
63.7	61.7	144(3658)	20-144**			109(49.4)

VERTICAL STYLE

HORIZONTAL STYLE

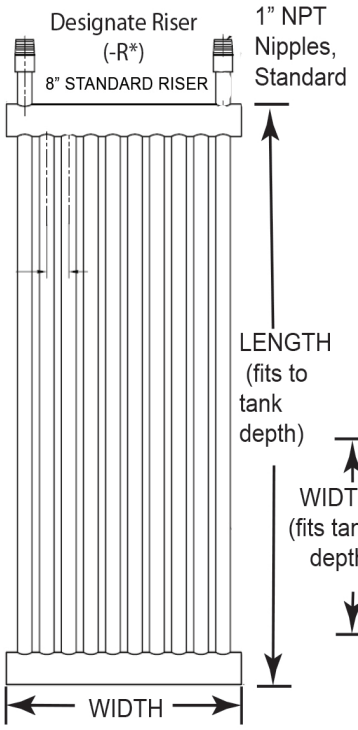

100 PSI MAXIMUM OPERATING PRESSURE

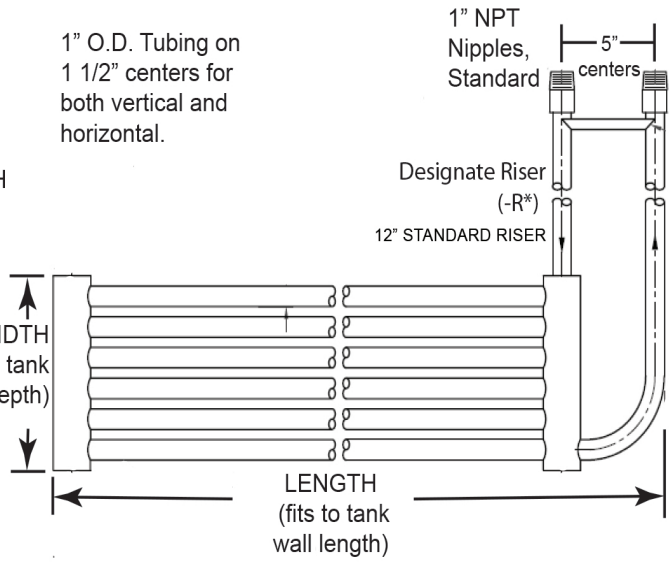

Column1	Column2	Column3	Column4	Column5	Column6	Column7
36" WIDTH (24 tubes)						
VERTICALSQUARE FEET	HORIZONTALSQUARE FEET	LENGTHIN. / (mm)	MODELNUMBER	(S) 316STAINLESS	(T)TITANIUM	SHIP WT.LBS. / (kg)
13.6	11.3	24(610)	24-24**			28(12.7)
16.8	14.4	30(762)	24-30**			31(14.1)
19.9	17.5	36(914)	24-36**			38(17.2)
26.2	23.8	48(1219)	24-48**			48(21.8)
32.5	30.1	60(1524)	24-60**			57(25.9)
38.7	36.4	72(1829)	24-72**			68(30.8)
45.0	42.7	84(2134)	24-84**			79(35.8)
51.3	49.0	96(2438)	24-96**			89(40.4)
57.6	55.2	108(2743)	24-108**			99(44.9)
63.9	61.5	120(3048)	24-120**			109(49.4)
70.2	67.8	132(3353)	24-132**			119(54)
76.4	74.1	144(3658)	24-144**			129(58.5)

Column1	Column2	Column3	Column4	Column5	Column6	Column7
42" WIDTH (28 tubes)						
VERTICALSQUARE FEET	HORIZONTALSQUARE FEET	LENGTHIN. / (mm)	MODELNUMBER	(S) 316STAINLESS	(T)TITANIUM	SHIP WT.LBS. / (kg)
15.9	13.1	24(610)	28-24**			32(14.5)
19.5	16.8	30(762)	28-30**			38(17.2)
23.2	20.5	36(914)	28-36**			45(20.4)
30.5	27.8	48(1219)	28-48**			56(25.4)
37.9	35.1	60(1524)	28-60**			68(30.8)
45.2	42.5	72(1829)	28-72**			80(36.3)
52.5	49.8	84(2134)	28-84**			92(41.7)
59.9	57.1	96(2438)	28-96**			103(46.7)
67.2	64.4	108(2743)	28-108**			115(52.2)
74.5	71.8	120(3048)	28-120**			126(57.2)
81.9	79.1	132(3353)	28-132**			140(63.5)
89.2	86.4	144(3658)	28-144**			150(68)

VERTICAL STYLE

HORIZONTAL STYLE

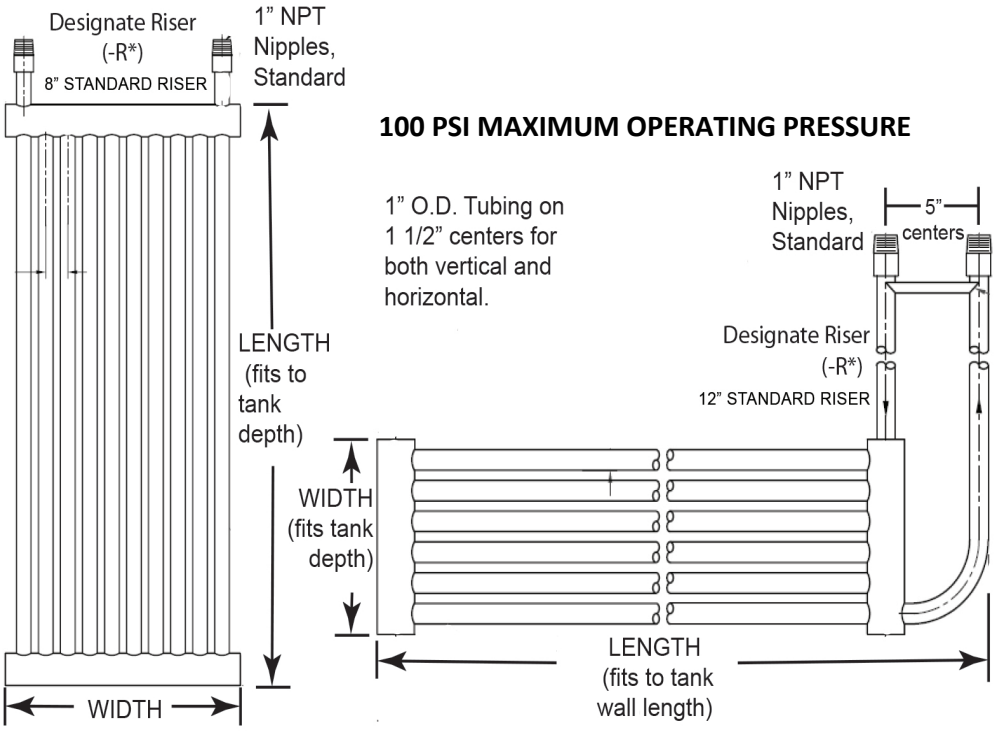

ALTA INDUSTRIES MODEL NUMBER GUIDE						
TUBE QTY	LENGTH IN INCHES	COIL OREINTATION	NUMBER OF PASSES	INLET/OUTLET SIZE	RISER LENGTH	MATERIAL TYPE
		V - VERTICAL	4 PASS STANDARD	34 = 3/4" NPT	8" STANDARD FOR VERTICALS	T = TITANIUM
		H - HORIZONTAL	4 PASS STANDARD	1 = 1" NPT	12" STANDARD FOR HORIZONTAL	SS = 316L STAINLESS STEEL
		BH - BOTTOM HORIZONTAL	4 PASS STANDARD	12 = 1-1/4 NPT	12" FOR BOTTOM HORIZONTAL	
				15 = 1-1/5" NPT		
				2 = 2" NPT		
MODEL NUMBER EXAMPLE 20-96-BH-4-1/1-R8-T						
20	96"	BH	4	1" INLET/1"OUTLET	8" RISERS	TITANIUM
20 TUBE COIL- 96" LENGTH -- BOTTOM HORIZONTAL CONFIGURATION -- 4 PASS -- 1" MNPT INLET/1" MNPT OUTLET 8" RISERS -- TITANIUM						