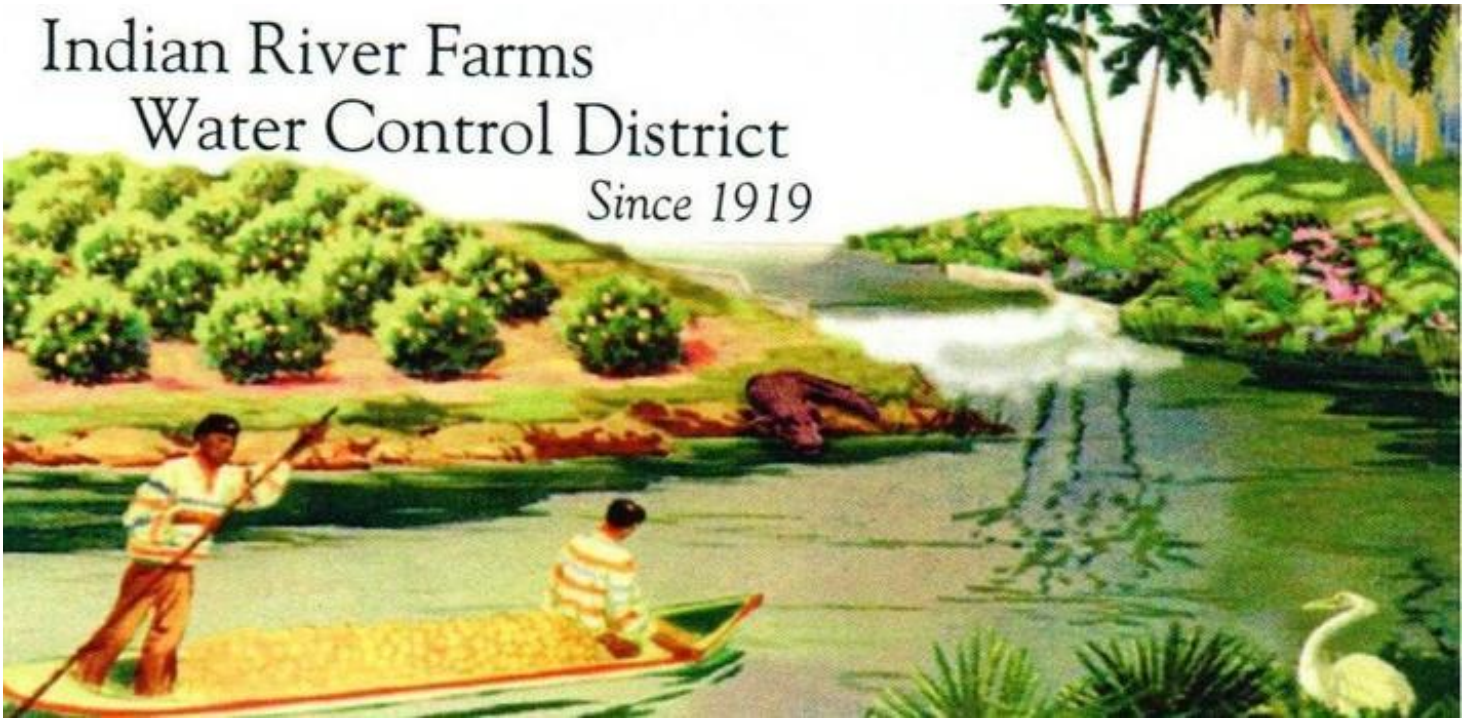

PERMIT INFORMATION AND CRITERIA MANUAL FOR USE OF OR CONNECTION TO WORKS OF THE DISTRICT

Administrative Office Location
7305 4th Street
Vero Beach, FL 32968
irfwcd.com

ADOPTED BY THE BOARD OF SUPERVISORS ON OCTOBER 27, 2026

TABLE OF CONTENTS

SECTION 1 **PAGE**

INTRODUCTION 4
- A. Introduction 4
- B. District Powers and Responsibilities 4
- C. District Characteristics 6

SECTION 2

RULES FOR USE OF OR CONNECTION TO WORKS OF THE DISTRICT 9
- A. Permits or Authorization Required 9
- B. Pre-Application Meeting 10
- C. Permit Application Requirements 10
- D. Permit Fees 14
- E. Pre-Construction Meeting 14
- F. Inspection / Project Certification 15
- G. Financial Responsibility 16
- H. Installation and Maintenance Responsibility 17
- I. Obstruction of District Right-of-Way / Property 17
- J. Due Process and Appeal Requirements 18

Section 2 Implementation Note 19

SECTION 3

LATERAL AND SUBLATERAL CROSSING CRITERIA 20
- A. Sublateral Crossing Policy 20
- B. Application for Sublateral Crossing Permit 21
- C. Culverted Crossing (less than 100 linear feet) 22
- D. Sublateral Culverting Criteria (greater than 100 linear feet) 23
- E. Lateral Crossings - Bridges 25
- F. Crossing Criteria Flexibility 27

SECTION 4

DRAINAGE CONNECTIONS TO DISTRICT CANALS 28
- A. Drainage Connections - Existing Connections 28
- B. New Connections and Enlargement of Existing Connections 28
- C. Water Quality and Storage Requirements 29
- D. Connection Permit Requirements 30

SECTION 5

OPEN CHANNEL CONNECTIONS 32

TABLE OF CONTENTS (continued)

SECTION 6

SPOIL DISPOSITION....33

SECTION 7

UTILITY CONSTRUCTION....34

A. Aerial Crossings....34
B. Over-Water Crossings....35
C. Under-Canal Crossings....35
D. Utility Paralleling Canal or Right-of-Way....37
E. Right-of-Way Use Fee (other than for Municipalities & Governmental Agencies)....38
F. General Utility....38

SECTION 8

OTHER USES AND REQUIREMENTS....40

A. Water Control Structure Installation and Operation....40
B. Beehives....40
C. Use of District Rights-of-Way for Access....40
D. Maintenance Access for Open Canals Adjacent to Roadways....41
E. Fencing of Canal Right-of-Way for Livestock....42
F. Access Gates in Right-of-Way....42
G. Docks/Observation Structures....43
H. Plantings and Vegetation....43
I. Windbreaks....43

Section 8 Enforcement Clause....43

APPENDICES

Appendix A - Discharge Limitation Policy....44

Appendix A-1 2"/24-Hour Discharge Limitation (1992)....45
Appendix A-2 2"/24-Hour Limitation Clarifications (2000)....47

Appendix B - Floodplain Policies....56

Appendix B-1 Floodplain Cut and Fill Policy (2005)....57
Appendix B-2 Floodplain Cut and Fill Clarifications (2020)....60
Appendix B-3 Floodplain Cut and Fill Policy (2023)....62

Appendix C - Pipe Material....63

Appendix C-1 Pipe Material Clarifications (2020)....64

EXHIBITS

Exhibit I	Design Sizes for Culverted Crossings in Drainage Sublaterals	66
Exhibit II	Sublateral Culverts Detail	68
Exhibit III	Rip Rap Details	
	A - Canal Side Slope Detail	70
	B - Pipe Connection Detail	72
	E1 - Entrance Culvert	74
Exhibit IV	Restoration of Sublateral Berms	76
Exhibit V	Overhead Utility Crossing	78
Exhibit VI	Under-Canal Utility Crossing	80
Exhibit VII	District Map	82

(REMAINDER OF PAGE INTENTIONALLY LEFT BLANK)

SECTION 1

A. INTRODUCTION

The purpose of this Permit Information and Criteria Manual for Use of or Connection to Works of the District ("Manual") is to provide information describing the criteria and permitting requirements relating to the utilization of, and connection to, the works of the Indian River Farms Water Control District (District).

This Manual should be used by permit applicants to prepare permit applications. It will be used as a guideline by the District staff to evaluate applications and proposals for permits. All criteria and requirements contained herein shall be enforceable upon adoption by the Board of Supervisors ("Board") as formal District Rules or by Board Resolution.

Any updates, revisions, or new criteria shall be adopted through the applicable rulemaking procedures. Applicants for permits should inquire of District staff for any pertinent updates or changes. All adopted updates shall be made publicly available on the District's website within 45 days of implementation.

All projects within the District's boundaries (see Exhibit VII) or those which may utilize District works (i.e., Main, North Relief, and South Relief canals, laterals, and sublaterals), regardless of size, location, direct or indirect connections, require review and permitting and/or authorization by the District.

All waters discharged into the District's canal systems shall meet water quality standards in accordance with laws and/or rules of the State of Florida; the Federal Government; and the St. Johns River Water Management District (SJRWMD). This includes, but is not limited to, compliance with Sections 373.016 and 403.031, F.S., and applicable provisions of Chapter 62-40, Florida Administrative Code (F.A.C.), and other applicable state and federal regulations.

As applicable and in matters largely governing in-kind replacements or renovations to existing facilities, the Board may waive strict application of the criteria appearing in this Manual when such action is determined to be in the best interest of the District and public, consistent with the objectives of the District.

Such waivers shall only be granted pursuant to formally adopted District Rules or Board action taken after public notice and hearing and shall be limited to circumstances where public health, safety, and welfare are not adversely affected.

B. DISTRICT POWERS AND RESPONSIBILITIES

The District is organized and exists under Chapter 298, F.S., and Codification of Special Acts found at https://www.flsenate.gov/Laws/Statutes/2026/Chapter298. The authority of the

District includes, but is not limited to, Sections 298.01 through 298.11, F.S., and any applicable special acts.

In the context of this Manual, the District is primarily responsible for drainage, flood control and protection, water management, and operation and maintenance of District works of improvement and rights-of-way (ROW) within the District boundaries. The rights of the District are paramount.

The primary function of the District is to control water within its boundaries with respect to drainage in times of excess water. The District maintains the dikes, water control structures, Main, North Relief, and South Relief canals, lateral canals, sublateral canals and ditches as shown in the Water Control Plan. Unless otherwise specified or quoted from a Florida statute, all references to "canal" or "canals" herein shall be deemed to include lateral canals, sublateral canals and ditches owned or controlled by the District.

All permit applications will be evaluated for the following major categories:

1) 2”/24-hour volume limitation to provide assurances that new projects will not overwhelm the drainage system with increased volume levels of water to manage (see Appendix A).

2) Maintenance of the 100-year floodplain storage within the project boundaries (see Appendix B).

3) Efficient and safe maintenance access roads to clean the canals.

All District landowners having legal access to District surface waters have a right to discharge water into the District’s canals provided that these activities are conducted in accordance with the regulations established and adopted by the District’s Board of Supervisors as reflected in this Board-adopted permit manual.

The District Administrator and/or District Engineer serve in a consultative and advisory capacity to the Board of Supervisors. They are authorized to provide technical guidance, develop recommendations, and assist in the administration of regulations adopted by the Board. All final regulatory decisions and approvals shall remain with the Board of Supervisors as presented by the Director(s) and engineering staff.

The District Administrator, with assistance from the District Engineer if necessary, shall verify permit compliance and take necessary actions to effectuate the direction of the Board of Supervisors.

The District Administrator and/or District Engineer shall provide technical review, analysis, and recommendations regarding permit applications and present findings to the Board of Supervisors for a decision. The District Administrator and/or District Engineer shall not independently approve, deny, or condition permits, nor establish binding regulatory requirements outside of rules duly adopted by the Board.

Any landowner desiring a different water table or elevation of water within the boundaries of the landowners' property different from that maintained in the canals is responsible for constructing and maintaining such culverts or other controls to meet internal needs.

It is recognized that the District lateral and sublateral canals do not have water level control gate and pipe structures. Therefore, it is impossible for the District to maintain water levels in the District system which will suit the needs of every landowner served without auxiliary control by the landowner to provide for their specific internal requirements.

The District is authorized to regulate and permit the construction, installation, modification, or connection of culverts, pumps, and other facilities within, upon, or connecting to District rights-of-way. No such work shall be undertaken without prior approval and issuance of a permit by the District's Board of Supervisors. This authority is necessary to ensure the District's facilities are operated, maintained, and managed in a safe, efficient, and uniform manner. See Section 2-A for a detailed description of permit requirements.

Best Management Practices (BMPs)

The District recognizes and supports various Best Management Practices (BMP's) adopted by the Florida Department of Agriculture and Consumer Services (FDACS), the United States Department of Agriculture's Natural Resources Conservation Service (USDA-NRCS), and the Indian River Citrus League (IRCL).

Landowners are encouraged to implement BMPs to accomplish effective environmental management through a total systems approach centered on water management, water quality, and water supply. The BMP philosophy represents the everyday working goal of the District and is promoted continually.

BMP program elements include a wide range of applications including weed barriers, disease control, side slope rehabilitation/stabilization, shoal removal, vegetation/sediment trapping and removal, biological control and physical structure rehabilitation and/or replacement.

C. DISTRICT CHARACTERISTICS

1) District Limits

The District's maintenance (taxing) area is depicted on the attached District Map (see Exhibit VII).

2) Existing District Facilities

The District land area is generally composed of a +/- 54,000-acre gravity watershed. Drainage is by a network of District laterals and canals which flow by gravity to the Indian River via the Main, North Relief, and South Relief canals.

In the westerly portion of the District where the land is generally higher a control structure holds the water level higher, "the upper pool." Water leaving the upper pool and

all other District Lands drain into interconnected lateral canals that run north/south and tie into the relief canals.

Each of the three (3) outfall canals has water control structures. Each control structure includes a tilting gate and radial gates. The tilting gate opens from the top down, and the radial gates open from the bottom up.

The District Superintendent can set the "spill over" level of the water by raising or lowering the tilting gate. This allows some flexibility to manage the water table upstream of the control structure during wet and dry seasons.

When large rain events occur, the tilting gate can be lowered to the full down position, and the radial gates are opened to the fully raised position to provide the maximum discharge flow rate.

Downstream of the control structures the water level in the canals follows the flow line of the canals and pipe inverts until it reaches the Indian River. The water flowing east in the main canal will cross a drop structure located just west of US Highway No. 1 and eventually will cross a salinity barrier weir set at elevation 0.0 NAVD near the outfall to the Indian River.

3) <u>Water Control</u>

The District does not own or operate any pumps. The Control Structures noted above are owned and operated by the District.

The District does not own or maintain any culverts. However, the District maintains the right to access, modify, remove, replace, (or in some cases do not replace), District canal crossing culverts that have failed and present a flow restriction for adjacent District landowners.

Also, the District maintains the rights to access, modify, remove, replace, (or in some cases not replace) and operate the gravity connection culverts that allow lands within the District boundary to drain to the lateral canal system should the landowner be non-compliant with the operation and maintenance requirements of the District.

4) <u>Drainage Laterals and Main Canal</u>

The District canal system drains by gravity to the Indian River. The sublateral canals run east/west on ½ mile centers. The sublateral canals connect to lateral canals which run north/south and are on 1-mile centers.

The lateral canals (A, B, C, D, E, G, H, J, 43rd Avenue Relief, and Rangeline) connect to the three relief canals. The main canal is located near the center of the District. The North and South relief canals are located on either side of the main canal. The sublaterals are designated by the letter name of the lateral they are connected to and are generally

numbered from #1 being the closest to the Main Relief canal and increase incrementally in both the north and south direction away from the main canal (see Exhibit VII).

All relief canals flow from west to east and they ultimately drain into the Indian River. The water elevation in these relief canals is controlled by control structures that include a combination of one tilting gate and multiple radial gates. At the east outfall of the main canal there is a salinity weir.

This subsection is descriptive and informational and does not create enforceable standards unless adopted by rule.

5) <u>Irrigation Facilities</u>

The District neither owns nor manages irrigation facilities. The District does maintain water control gate structures to hold water back during the dry season; however, the District does not manage irrigation supply.

Irrigation water sources typically used by District landowners within the gravity drained portion of the District are either wells or on-site lakes to collect and re-use rainwater.

In the past, only a couple of landowners have requested permits to install irrigation pumps to withdraw water from the IRFWCD system.

All facilities for irrigation shall be installed, operated, and maintained by individual landowners and shall remain private. The District makes no guarantee of the water volume available for irrigation at any time.

Landowners may install, after District permit authorization, private irrigation systems connecting to District Works in accordance with this Permit Manual and associated Exhibits.

(REMAINDER OF PAGE INTENTIONALLY LEFT BLANK)

SECTION 2

RULES FOR USE OF OR CONNECTION TO WORKS OF THE DISTRICT

A. Permits or Authorization Required

No culvert connection, culvert crossing, utility crossing, or other improvement shall be constructed across, under, along or within a canal or other right-of-way over which the District has jurisdiction, nor shall any use whatsoever occur within a District right-of-way or easement, unless a valid application for a construction or use permit has been approved and issued by the District. Such approval shall be issued pursuant to District Rules adopted by the Board and noted in this permit manual, which may be updated from time-to-time and posted on the District website.

No land use alteration, site development, or other activity that alters the quantity or quality of surface water runoff on any property within the jurisdictional limits of the District shall occur unless a valid site plan review and connection permit application has been submitted to, reviewed, and approved by the District. Activities that qualify for a statutory exemption, as determined by applicable state law and District regulations, shall be exempt from this permitting requirement unless otherwise specified by the District, including agricultural uses not constituting a change of land use and residential, commercial, or industrial land uses consisting of a total of 5,000 or less square feet of impermeable surfaces on the property.

Any proposed utilities that cross a District right-of-way will require a separate utility permit. Utility permits are issued to the utility owner, and as such the utility owner must be the entity applying for the utility permit.

The permit application process consists of two parts which both require District approval authorization for construction and inspection/project certification. Upon District approval of the application submittal, the applicant will receive a permit. After construction is complete, the applicant shall complete the Inspection/Project Certification requirements outlined below for the permit process to be deemed complete.

In the case of an emergency, authorization (written if practical) may be given by the Supervisor of Operations or District Engineer as per Board delegation. Emergency authorizations shall be governed by procedures adopted in District Rule and shall be documented and ratified. All emergency authorizations shall be subject to ratification by the Board of Supervisors at the next regularly scheduled Board meeting.

Any proposed use, crossing, or connection to works of the District shall not inhibit maintenance of the canal system. Easements may be required to facilitate uninterrupted maintenance access to the works of the District. Alternative arrangements for maintenance at the full expense of the project applicant may be considered at the Board's discretion on a case-by-case basis.

Such determinations shall be made in accordance with criteria established in District Rules.

A map showing the general location of the District's rights-of-ways may be acquired from the District's office and/or website (see Exhibit VII).

B. Pre-Application Meeting

Every applicant is encouraged to contact the District staff prior to preparing an application for District review and evaluation. The staff can assist in providing information and answering questions. Informal pre-application meetings can be scheduled by contacting the District office at (772) 562-2141. If the District determines that a formal pre-application meeting is required, it can be scheduled after the District receives the site plan review application and fee from the applicant.

All applications, forms, checklists, and application-related materials are available on the District's website.

C. Permit Application Requirements

Permit application forms can be obtained from the District office or the District's website. The application form must be signed by the owner of the private property or authorized representative.

Supporting documentation must (as applicable) include:

1) Project name, location and area (in acres), to be served by the proposed improvement. Include a legal (Plat) description; canal number; and location within the canal right-of-way related to an intersection of the nearest IRFWCD canal or related to some known and identifiable feature.

2) Whether the proposed use is a new installation, a modification of an existing improvement, revision to the existing stormwater system design, or a replacement of existing works.

3) A description of the proposed use of, or encroachment on, works of the District.

4) Two hard copies and an electronic copy of the full-size construction plans and specifications reflecting the proposed use in plan and elevation views, and as related to the applicable works of the District. The plans provided shall be dated, signed, and sealed by the Engineer of Record and shall clearly indicate the project design datums. The District inventory survey and stormwater management model records, are currently in NGVD-29, Therefore, if other datums is used for survey and construction plans, the Engineer of Record must include the conversion to NGVD-29, and include the inverts of pipe connecting to or installed in IRFWCD R-O-W.

5) Two hard copies and an electronic copy of a boundary and topographic survey dated, signed, and sealed by a Professional Surveyor licensed in the State of

Florida, for the project area and adjacent canal right-of-way. Label all IRFWCD canals.

6) As appropriate, two hard copies and an electronic copy of supporting stormwater calculations dated, signed, and sealed by the Engineer of Record, demonstrating that the proposed improvements meet all applicable District criteria.

7) Any proposed improvement which may alter the natural groundwater gradient to a District canal, including but not limited to excavations or water impoundments, shall submit a seepage analysis demonstrating that the proposed improvement will not adversely impact the stability of the adjoining canal bank.

8) Proposed project flood route drainage calculations (ICPR/Stormwise or equal) shall address the 2"/day maximum allowable discharge volume requirement for any 24-hour period during a 25-year - 24-hour event from hour 0 to hour 72. The maximum 24-hour time frame and discharge volume to be noted on the output summary. The design engineer may coordinate with the District Engineer on the tail water time vs. stage relationship (see Appendix A).

9) The proposed project should design the overflow structure grate to be set at the 25 yr – 24-hour peak stage. This will facilitate the negative flow from the District's canal system back into the site during storm events greater than the 25-year event and positive flow back into the District's system as the receiving water recovers from the peak stages.

10) The proposed project must provide provisions to prevent negative impacts to the existing drainage of adjacent, upstream, or downstream landowners.

11) Percolation

New or modified drainage connections using percolation in the stormwater design are subject to the following:

a) The applicant shall include assurance that the soils can provide adequate percolation for the intended purpose. All percolation rates may assume a minimum factor of safety of two.

b) Soil borings from a certified geotechnical report are required for the subject property.

c) A percolation exhibit showing the anticipated effects of groundwater (percolation rings) must be provided.

d) The aquifer base must be no lower in elevation than the bottom of the boring or the highest elevation of the impermeable layer, unless a soil exchange is proposed to remove and replace the impermeable layer.

e) The groundwater table must be assumed to be the wet seasonal high water level elevation.

f) Soil percolation rates shall be verified through field testing and shall match the rates used in the design calculations. Soils exhibiting percolation rates lower than those assumed in the design shall be removed and replaced.

12) Stormwater Harvesting Requirements

The IRFWCD requires the flood routing of proposed projects to meet the two (2) inch / day volume limitation (from time hour 0 to time hour 72), during and after a 25 year – 24-hour event design storm (9.2 inch), (see Appendix A). These storms typically occur during the wet season when the antecedent conditions may be wet and irrigation system use is reduced. This can result in the lakes containing excessive treatment water to be used for irrigation when a storm event occurs. Therefore, the following criteria has been established for stormwater systems using the wet detention pond for irrigation purposes.

a) The normal water level (stormwater harvest volume is above this elevation) of the pond shall be designed at the wet season high water table elevation.

b) The starting water level in the lake for the flood route calculations shall be assumed to be the higher elevation of either of the following:

i. The level representing 50 percent of the harvesting volume in the lake, or

ii. Six (6) inches below the attenuation weir

The applicant shall submit construction plans and calculations demonstrating compliance with the above criteria.

13) 2” Discharge Limitation for Public Roads will be reviewed based on the following conditions:

a) Existing public road maintenance projects that do not add public R-O-W the stormwater system is sized to meet pre vs post (not to exceed 4"/24-hour) for both the existing and proposed additional impervious area.

b) All roadway improvements consisting of mixed drainage from both a public road and private development are required to have a stormwater system that meets the following criteria: Pre versus post runoff, not to exceed 4"/24-hour of the existing public R-O-W to be routed through the same stormwater system. Demonstrate the private development project and new road R-O-W meets the IRFWCD 2" volume limitation discharge rule. (i.e., subdivisions with new turn lanes).

c) For linear public road improvement projects which include additional new R-O-W, the stormwater system is sized to meet the 2" discharge rule for both the existing and proposed additional R-O-W areas (i.e., two (2) lane to four (4) lane projects).

14) Maintenance of 100-Year Flood Plain Storage

Proposed project drainage calculations shall address the maintenance of flood plain storage. Cut and fill calculations demonstrating that compensating storage volume is being created to offset and proposed fill in the flood plain shall be prepared by the design engineer registered and currently licensed to practice Civil Engineering in the State of Florida. The existing conditions shall be based on a topographic survey prepared and signed and sealed by a Surveyor registered and currently licensed to practice in the State of Florida (see Appendix B).

15) Miscellaneous Submittal Requirements

a) If a proposed project includes a request to "culvert" a section of a sublateral canal greater than 100 feet, additional permit requirements must be met (see Section 3-D).

b) Include a copy of the appropriate Exhibit sketch on the project lanes for all connections to a District canal or pipe construction in a District canal, (see Exhibit section of this manual) for each proposed improvement in the permit application. Complete all requested information on each Exhibit.

c) IRFWCD may require a bond for any proposed use of the District's right-of-way to provide assurance that the District's lands are properly restored at the completion of the proposed project, unless waived by the IRFWCD Board of Supervisors.

d) The IRFWCD may require additional safeguards to ensure that potential discharges of pollution into project's onsite stormwater systems can be contained onsite.

Landowners enrolled in BMAP programs for water control with FDACS, USDA-NRCS, or similar agricultural associations are encouraged to submit their plans as part of the supporting documentation to a permit application. On a case-by-case basis and at the discretion of the Board, the District may accept supporting documents prepared for adopted BMAP's or Conservation Plans in lieu of portions of the permit submittal requirements.

Insufficient or unclear drawings shall result in the return of an application without action by the District. Inadequate re-submittals which do not fully address the

District's request for information may also be returned without action by the District.

All technical criteria listed above (including but not limited to discharge limits, flood routing, percolation, and storage requirements) are adopted by District Rule or incorporated by reference into such Rules.

Where applicable, these requirements shall be consistent with Sections 373.016 and 403.061, F.S., and Chapters 62-330 and 62-621, F.A.C.

Acceptance of such documentation in lieu of specific requirements shall be at the discretion of the Board as defined in District Rules.

D. Permit Fees

Permit applications shall be accompanied by the required fees. An application will be considered or reviewed only after the application is completed and signed, and the required fees are submitted.

Permit fees shall be established by the Board of Supervisors by Resolution pursuant to Section 298.22(9) F.S. and implemented through District Rules.

The permit process and application can also be found on the District's website. Plan changes and review of resubmittals require additional review time.

Applicants are responsible for submitting complete and accurate applications; incomplete submittals may result in delays or return without review.

E. Pre-Construction Meeting

For large or complex projects, a pre-construction meeting is required as determined by the District.

District concerns shall be addressed by the contractor and/or Engineer prior to the start of the work, including the following:

1) The project schedule.

2) The dewatering plan shall include water quality testing when dewatering discharges are proposed to District canals. Turbidity at the discharge outfall shall not exceed 29 NTUs above background levels for discharges into the main canal basins and shall not exceed 0 NTUs above background levels for discharges into the North Relief or South Relief basins. Monitoring and testing procedures shall be included in the dewatering plan.

3) An approved bypass pumping plan if drainage will be obstructed during construction.

All such requirements are enforceable as adopted within District Rules and are consistent with applicable state water quality standards.

F. Inspection / Project Certification

Any utility or other improvement constructed under a valid permit shall be subject to inspection by the District to assure compliance with the terms of the permit.

1) Permit Inspection Requirements

The District may establish permit inspection requirements by Rule, including, but not limited to, the following:

a) Permittees shall provide the District with a minimum of 48 hours' advance notice prior to commencing work within District rights-of-way.

b) All permittees shall schedule a pre-construction meeting held with the District prior to commencing work. Permit issuance from the District is required prior to scheduling the pre-construction meeting.

c) The District may conduct inspections at any stage of construction to verify compliance with permit conditions, approved plans, and applicable District requirements.

d) Provide a dewatering plan at the preconstruction meeting for the permit approved work.

e) A final inspection shall be scheduled with and approved by the District prior to permit closeout.

Specific inspection requirements and exemptions are established in this Board-adopted Permit Manual.

2) As-Built Certification Requirements

Additionally, within 30 days after completion of the permitted activity, the Applicant/Permittee shall submit notice of completion to the District for approval, which triggers the final inspection.

Unless otherwise specified by the District, this shall consist of the following:

a) A written, dated, signed, and sealed statement of completion, certification by a currently registered Florida Professional Engineer.

b) Two (2) complete sets of final "Record Drawings" dated, signed, and sealed by a Professional Surveyor and Mapper currently licensed in the state of Florida. The Record Drawings shall accurately depict and certify all constructed improvements including at a minimum, dimensions, elevations, pipe sizes, pipe lengths, pipe inverts; control structure information (including weir type, dimensions, and crest elevations), stormwater management storage areas, and any other permit-required improvements.

c) Directional drilling plan and a boring plan and profile are required with separation distance, top of pipe, and bottom of canal elevations. These documents must be dated, signed, and sealed by a currently licensed Florida Professional Engineer or Florida licensed surveyor.

The Engineer's certification statements must specify the actual date of construction completion and must certify that all improvements have been constructed in substantial conformance with the plans and specifications approved by the District and will function as intended and designed.

If deviations from the approved drawings are discovered during the certification process, the certification must be accompanied by a copy of the approved permit drawings with deviations noted. Also, any deviations affecting the drainage calculations must be analyzed and certified by the Engineer of Record that the project is compliant with District permit criteria.

All certification and professional requirements shall comply with Sections 471.013 and 472.027, F.S., and shall be enforceable as incorporated into District Rules.

G. Financial Responsibility

Financial responsibility for the technical and professional review fees during the permit review process, construction, and maintenance costs of all connections and/or all proposed improvements, is the responsibility of the District landowner as the applicant requesting such actions. This requirement is authorized under Section 298.22(8) and (9), F.S.

Engineering review, inspection, and any other technical costs incurred by the District in connection with the review, processing, and oversight of a permit application or permitted activity shall be billable to the Applicant/Permittee. Such fees shall be based on actual time and expenses at rates established by the District's contracted engineering firm, as approved by the Board of Supervisors.

Legal fees and costs incurred by the District in connection with the review, negotiation, or enforcement of permit-related matters, including but not limited to the preparation or review of easements, agreements, or legal opinions required as a condition of a permit, shall be billable to the Applicant/Permittee at the rates established by the District's legal counsel, as approved by the Board of Supervisors.

A summary of applicable fees, including engineering and legal rates, shall be made available to applicants upon request and may be updated periodically by resolution of the Board of Supervisors.

H. Installation and Maintenance Responsibility

Installation and maintenance responsibility for the use of, or construction of facilities, in, on, over, or under District rights-of-way shall be that of the Permittee or the entity identified in the permit. The acceptance of the IRFWCD permit provides the District the right to enter the permitted property and inspect such facilities to determine their capability to provide effective stormwater management in accordance with the District permit. Failure of the applicant to maintain the facilities will result in the District correcting such matters as deemed applicable and the billings of these remedial actions to the responsible party at a rate of costs plus twenty percent. Failure to maintain the permitted use or works may result in the revocation of the permit, and at the District's sole discretion, the removal of the crossing, connection, or use.

Installation and maintenance responsibility for permitted facilities shall be that of the Permittee.

Failure to maintain may result in District corrective action and billing at cost plus 20%, permit revocation, or removal of improvements.

Such enforcement actions shall be carried out in accordance with District Rules.

I. Obstruction of District Right-of-Way / Property

The obstruction of District right-of-way/property by the placement of, but not limited to, materials; equipment; buildings; debris, is a violation of Florida Statutes as noted in 298.66.

Title XXI DRAINAGE

Chapter 298 DRAINAGE AND WATER CONTROL

298.66: Obstruction of public drainage canals, etc., prohibited; damages; penalties. –
A person may not willfully, or otherwise, obstruct any public canal, drain, ditch or watercourse or damage or destroy any public drainage works constructed in or maintained by any district.

Any person who willfully obstructs any public canal, drain, ditch or watercourse or damages or destroys any public drainage works constructed in or maintained by any district shall be liable to any person injured thereby for the full amount of the injury occasioned to any land or crops or other property by reason of such misconduct and shall be liable to the district constructing the drainage work for double the cost of removing such obstruction or repairing such damage.

Any person who willfully, or otherwise, obstructs any public canal, drain, ditch, or watercourse, impedes or obstructs the flow of water therein, or damages or destroys any public drainage works constructed in or maintained by any district, commits a felony of the third degree, punishable as provided in s. 775.082, s. 775.083, or s. 775.084.
History. – s. 5, ch. 6190, 1911; s. 52, ch. 6458, 1913; RGS 5293, 5294; ss.1-3, ch. 10110, 1925; CGL 1518, 1519, 7413-7415; s. 163, ch. 71-136; s. 28, ch 79-5; s. 48, ch. 2010-205.

The obstruction of District right-of-way/property by placement of materials, equipment, buildings, or debris is prohibited.

This is governed by Section 298.66, Florida Statutes, which provides:

- No person may obstruct any public canal, drain, ditch, or watercourse.
- Violators are liable for damages and removal costs.
- Violations may constitute a third-degree felony punishable under Sections 775.082–775.084, F.S.

This statutory provision is independently enforceable and is incorporated herein by reference.

J. Due Process and Appeal Requirements

The following due process protections shall apply to all permit applications and enforcement actions under this Manual:

1) Completeness Review. Upon receipt of a permit application, the District shall review the application for completeness and provide the applicant with written notice that the application is complete or identifying any deficiencies requiring correction. An application shall not be deemed denied solely for incompleteness; the applicant shall be afforded a reasonable opportunity to cure any deficiency.

2) Review Period. The District shall act on a complete permit application within a reasonable time. For applications requiring Board approval, the application shall be placed on the agenda of the next regularly scheduled Board of Supervisors meeting occurring after staff review is complete. If the District requires additional information, the applicant shall be notified in writing, and the review period shall be tolled until the requested information is received.

3) Written Decision. All permit decisions shall be issued in writing and shall include the factual and regulatory basis for the decision. Conditions of approval shall be clearly stated and shall reference the specific provisions of this Manual or District Rules upon which they are based.

4) Right to Appeal. Any applicant or affected party aggrieved by a permit decision or enforcement action may file a written appeal to the Board of Supervisors within thirty

(30) days of the date of the written decision. The Board shall hear the appeal at a duly noticed public meeting in compliance with Section 286.011, F.S. The applicant shall be afforded the opportunity to present evidence and argument. The Board's decision on appeal shall be issued in writing and shall constitute final District action.

5) Judicial Review. Any party aggrieved by a final decision of the Board of Supervisors may seek judicial review in the Circuit Court of Indian River County, Florida, in accordance with applicable law. Nothing in this Section shall be construed to limit or waive any rights to judicial review otherwise available under Florida law.

SECTION 2 - IMPLEMENTATION NOTE

All provisions of this Section shall be interpreted and applied as enforceable regulatory requirements as they are formally adopted as District Rules. In the event of conflict between this Manual and adopted Rules, the adopted Rules shall control.

(REMAINDER OF PAGE INTENTIONALLY LEFT BLANK)

SECTION 3

LATERAL AND SUBLATERAL CROSSING CRITERIA

A. Sublateral Crossing Policy

It is the policy of the District to:

1) Allow a District landowner vehicular access to their property from one side of a canal to the other, provided that it is the only practical alternative for accessing the subject property.

   Such access determinations shall be made in accordance with District Rules and applicable authority under Section 298.22(8) and (9), F.S.

2) Limit the spacing between culverted crossings in a sublateral to not less than 100 feet. Exceptions for developed areas with existing ("grandfathered") crossings or small tract areas may be granted by the Board on a case-by-case basis. All spacing requirements, exceptions, and definitions of "grandfathered" conditions shall be established and applied pursuant to District Rules.

3) Limit hydraulic losses in canal systems so that a single crossing, whether culvert or bridge, induces a head loss in the system of not more than 0.10 feet. Hydraulic criteria, including allowable head loss and design flow methodology, shall be established and enforced through District Rules based on accepted engineering standards (see Exhibit I).

4) The District does not assume maintenance responsibilities or ownership of any culverts placed in the District canals. Nevertheless, the District must maintain flow in the canal system. Pipe failure repairs immediately become a District priority. Based on years of experience of assisting pipe owners with pipe failures, the District has adopted a "Pipe Material Requirement" matrix (see Appendix C).

   The District shall not assume ownership or maintenance responsibility unless expressly provided by law, agreement, or District Rule.

5) The District has adopted minimum pipe size requirements to establish minimum pipe sizes for canal crossings (see Exhibit I).

   Minimum pipe sizes and design standards shall be established by District Rule based on engineering analysis and may be updated through rulemaking procedures.

6) All conveyance culverts shall consist of a single barrel pipe; multi-barrel culverts are not permitted.

7) The District may require joint use crossings to serve more than one owner. Joint use requirements shall be applied in accordance with District Rules.

8) Final inspection must be conducted with the District for permit closeout in accordance with Section 2-F.

The District shall establish the drainage area used to determine the design flow at each crossing and shall evaluate canal crossing permit applications in accordance with the foregoing policies. All culverts shall be sized using the minimum pipe size tables provided in Exhibit I as a guideline. The contributing drainage area shall be determined from the Plan of Reclamation, which depicts the tracts and canals comprising the District's drainage system. Tracts adjacent to each sublateral are designed to contribute runoff to that sublateral. The mid-point located between the adjacent sublaterals serves as the basin limits, directing runoff into their appropriate lateral.

B. Application for Sublateral Crossing Permit

A permit application for a new, or an existing unpermitted crossing shall include, at minimum, the following information on the nearest culverted or bridge crossings both upstream and downstream from the proposed crossing, all provided by the applicant at no expense to the District.

1) The location, in feet, from the nearest existing upstream and downstream crossings to the location of the proposed crossing.

2) For culverts, the invert elevations (NGVD 29 or NAVD 88 with conversion); diameter; length; material type; wall type; and wall thickness. Three surveyed cross-sections of the sublateral right-of-way: one at the location of the proposed crossing, and one fifty to one-hundred feet upstream and downstream of the proposed crossing. At a minimum, surveyed elevations must be provided at each right-of-way line, sublateral top of bank, toe of slope, and at the lowest point of the sublateral bottom. The location of any existing improvements and their proximity to the project area shall also be shown.

3) Three surveyed cross-sections of the sublateral right-of-way: one at the proposed crossing and one 50 to 100 feet upstream and downstream. Survey requirements shall comply with Section 472.027, F.S., and be signed and sealed by a Professional Surveyor and Mapper (PSM).

4) Any end treatment or bank revetment proposed as part of the design. Design details shall conform to standard Exhibits (see Exhibit III-E1) incorporated by reference into District Rules.

5) Improvements within the District right-of-way must provide sufficient access for District maintenance equipment.

6) Access requirements shall be defined by District Rule.

A permit application for replacement of an existing permitted crossing must include sufficient information to determine whether upgrades are required. Upgrades shall be required where necessary to comply with current standards adopted by District Rule (see Appendix C).

C. Culverted Crossing (Less Than 100 Linear Feet)

A road crossing a District sublateral may be culverted, provided it is no closer than 100 feet from an existing crossing unless otherwise allowed by District Rule.

The requirements below apply to proposed crossings replacing canal sections less than 100 linear feet:

The culvert must be sized to pass design flow with a maximum head loss consistent with the criteria described in Section A above.

The culvert design, including invert elevation, diameter, length, and end treatment, must be consistent with the water management objectives of the sublateral. Such objectives and design standards shall be specified in District Rules based on engineering criteria.

If a proposed crossing violates the 100-foot minimum spacing guideline, or results in an unacceptable head loss, then the culvert may be oversized at the option of the District. The District shall determine drainage areas, invert elevations, and culvert oversizing requirements.

Any proposed crossing requiring more than one culvert to pass design flow shall not be permitted.

Multiple culvert crossings for the same property may only be allowed if authorized by District Rule.

Construction shall conform to the requirements of Exhibits I, II, and III-E1.

During construction of any culverted canal section, the Contractor shall maintain uninterrupted stormwater conveyance within IRFWCD canals. Canal conditions and flows shall be continuously monitored, with qualified personnel available 24 hours a day, 7 days a week, to respond to and correct any conditions that could impede drainage or affect canal operations. To prevent elevated water stages in the upstream canal sub-basin, any temporary blockage of a canal for such culvert installation will require the provision onsite, of a pump (equal in flow capacity to 2”/day for the upstream watershed) or other bypass method. In addition, the landowner shall maintain onsite the equipment and workforce with the capability to immediately remove any temporary dam, and any other construction related impediments, to provide the full capacity and flow conditions of the canal during the entirety of construction. All such proposed temporary blockages, bypass, and associated construction

methods shall be reviewed and approved by the District prior to implementation and shall be coordinated with the District throughout the construction.

Utilizing Steel Sheeting for Culvert Replacements: The District recommends the use of driving steel sheet piles into the cross-section of the ditch and using adequately sized bypass pumps during construction within the cross-section of the canal. The District will provide an elevation generally 1 foot below the 10-year storm stage in the canal for a notch to be driven into both ends of the sheet pile walls. This notch will provide a failsafe in case a bypass pump runs out of fuel or malfunctions. The water can stage up in the canal and flow over the notch through the work zone and out the notch on the other side, so drainage is still maintained. Contractors are not permitted to place fill above the elevation of the notch in the sheet pile walls, or this defeats the purpose of the notch.

Dirt dams are not permitted in the District sublaterals for dewatering. They create additional work for the District maintenance crews for clean up and restore the canals.

D. Sublateral Culverting Criteria (Greater Than 100 Linear Feet)

In the case where a proposed project requires a section of canal to be culverted more than 100 feet in pipe length to allow construction of a turning lane or some other land development improvement, then additional requirements will be required to mitigate the following impacts to the IRFWCD drainage system:

1) The reduction of runoff storage capacity in the canal.

   a) Within the canal section to be replaced with a culvert, all flood storage must be maintained from pre-to-post development. Predevelopment storage volume calculations shall be based on the existing canal cross-section up to the 25-year peak stage and the length of the sublateral canal to be filled. The cross-section area will be based on enough cross-sections to obtain a reasonable approximation of existing conditions as determined by a Florida Registered Land Surveyor and shall be based on (1988 NAVD). The design engineer must estimate the 25- and 100-year flood elevation from the FIRM maps or based on the results of the IRFWCD study.

   b) The post development storage volume reduction is the difference between the pre-development volume found in Part A above less the volume of storage in the culvert system voids.

   c) The storage volume reduction must be compensated within the subject sublateral canal's drainage basin. The storage may be included in the onsite stormwater management system. The volume needed to fully compensate the volume lost due to the culverting of the sublateral must be in addition to that which is needed to address the 2" limitation and the flood plain cut-and-fill balance required for the onsite improvements. The volume must be available between the control elevation of the stormwater system and the 25-year peak stage elevation for the 25-year

storm event analysis. If the storage is not available on-site, the compensation shall be within the subject sublateral canal's watershed.

d) Similar to the Subsection C above, the 100-year event analysis shall demonstrate that the volume lost due to the culverting will be fully compensated. However, this additional volume to meet the 100-year event (above the 25-year event) may be provided between the 25- and 100-year elevations.

2) The loss of water storage capacity in the soil horizon next to the canal.

a) The existing open canal section lowers the adjacent water table by seepage into the canal. When the ditch section is replaced with a culvert, soil storage must be maintained.

b) A slotted or perforated pipe to allow seepage will mimic an open section. The slotted/perforated pipe should be installed within a gravel layer and wrapped with filter cloth.

c) As an option, the design may include a smaller perforated pipe installed parallel to the main culvert. The smaller pipe invert must be installed at the elevation of the flow line of the existing canal. The pipe shall be wrapped in gravel (6" minimum thickness) and filter cloth. The minimum pipe size shall be 18". Connections to the main culvert section shall be at 200 ft. centers (maximum).

3) The increased cost of maintenance of culverts vs. open canal.

a) The IRFWCD does not assume ownership of any culverts placed in District canals. Ownership and maintenance responsibilities shall be governed by District Rules, permits, and applicable law.

b) The expected life span of pipe sections varies by pipe material, soil chemistry, quality of installation, traffic loads, oxidation, and other factors. All pipes will eventually wear out and need to be replaced. A 100 (minimum) year life span pipe, per FDOT guidelines, is required due to the extensive impacts that replacement will create. The District strongly encourages the use of RCP to meet this objective (see Appendix C).

c) The Applicant, landowner, FDOT, Indian River County, or the City of Vero Beach, must provide and bear the cost of any required maintenance or replacement. If the Applicant fails to maintain the culvert, the District shall subcontract for the maintenance and/or removal and charge the Applicant for all costs including administration in accordance with Section 1-H.

4) Maintaining flow of stormwater during construction.

   Flow of stormwater must be maintained in IRFWCD canals throughout the construction phase of any culverted section of the canal. To prevent elevated water stages in the upstream canal sub-basin, any temporary blockage of a canal for such culvert installation will require the provision on site, of a pump (equal in flow capacity to 2"/day for the upstream watershed) or other by-pass method. In addition, the landowner shall maintain onsite the equipment and workforce with the capability to immediately remove any temporary dam, and any other construction related impediments, to provide the full capacity and flow conditions of the canal in the event of a storm event. All such proposed temporary blockages and bypass methods shall be approved in advance, and coordinated throughout the construction phase, by/with the IRFWCD.

5) Pipe end treatments to prevent erosion and debris entry into the pipe may be required. Specific requirements are established in Exhibit II.

6) Pipe size is adequate to allow no increase in the upstream pre-development peak stage.

   The entire flow channel of the culvert including the top, bottom, and sides shall be smooth with no rough corners to catch trash. Also, reduction or change of the cross-section is not allowed in the direction of flow. The pipe size shall be based on the IRFWCD pipe size table or the size needed to maintain (with no increase) the upstream predevelopment peak stage, whichever is larger.

   The District's Engineer, in a consultative capacity, will provide the Applicant's Engineer the appropriate node/reach exhibit and summary of pre-development peak stage and flows for the 25-year and 100-year events. Such information is provided as technical guidance only and does not constitute a binding determination by the District.

7) Exemptions.

   Culverted canal sections less than 100 feet long are exempt from the mitigation policies noted in Parts 1 and 2 above.

8) The District Board of Supervisors approval.

   The permit will require approval by the Board of Supervisors before issuance. CONSTRUCTION CAN NOT START UNTIL THE PERMIT IS ISSUED. Approval procedures shall comply with Section 286.011, F.S. (Sunshine Law).

E. Lateral Crossings - Bridges

By resolution adopted by the IRFWCD Board only bridge crossings are permitted over the District's Main, North Relief, and South Relief canals, and lateral canals A, B, C, D, E, G, H, J, 43rd Avenue Relief, and Rangeline. Alternative non-bridge crossings over these canals, as

well as sublateral canals, may be considered and will be reviewed on a case-by-case basis, with final determination being made at the discretion of the Board.

All bridges crossing District rights-of-way must be designed and certified by a Florida Professional Engineer with certification in bridge design. All bridges crossing District canals must provide for continuous and uninterrupted access for District equipment along both canal berms. All bridges must be designed and certified by a Florida Professional Engineer. Certification shall comply with Section 471.013, F.S.

Public road bridges within the District subject to use by the public shall be designed to carry minimum anticipated loads per Florida Department of Transportation Design Standards.

The following minimum horizontal and vertical clearances shall control the design of bridges over District canals:

Horizontal:

Center Span: 25-foot clear bent spacing, measured perpendicular to the canal centerline.

Approach Spans: Minimum 20-foot spacing between bent centers, measured perpendicular to the canal centerline.

Vertical:

Minimum Low Member Elevation: The minimum low member elevation shall be a minimum of one (1) foot above the 100-year peak stage.

All bridges crossing a District right-of-way shall include the following minimum maintenance and stabilization measures:

1) Sacrificial pilings for weed collection. Note, not required if bridge is a single span design.

2) Hardened revetment consisting of FDOT Rock Rubble Riprap meeting the canal lining specification shall be constructed from the top of bank to the toe of slope. The length of the revetment shall cover a minimum of 25 feet upstream and downstream and also under the span of the bridge. Any disturbed canal side slope beyond the 25-foot minimum will require additional rip rap stabilization. The geotextile material underlying the riprap revetment shall be anchored at the top of slope and overlap a minimum of four feet at each joint and be placed continuously under bedding stone layer. No armor is allowed on the canal bottom.

3) Note, each bridge crossing will be reviewed for the above minimum criteria, and additional requirements may be requested by the IRFWCD on a case-by-case basis to meet the District drainage and maintenance objectives.

F. Crossing Criteria Flexibility

The foregoing criteria are to be used as guidelines in designing and evaluating the crossing improvements. Alternative methods of meeting the District's objectives may be considered, depending on the magnitude and nature of resultant impacts on a case-by-case basis. As stated, the Board may modify these criteria, provided that the primary goal of meeting District water control objectives is not compromised.

The District Engineer may recommend alternative crossing designs or modifications to the criteria set forth in this Section; however, all such recommendations shall be presented to the Board of Supervisors for approval. The Board of Supervisors retains sole authority to approve, deny, or condition any deviation from the established crossing criteria.

(REMAINDER OF PAGE INTENTIONALLY LEFT BLANK)

SECTION 4

DRAINAGE CONNECTIONS TO DISTRICT CANALS

A. Drainage Connections - Existing Connections

Drainage connections to District canals installed prior to the adoption of these Rules must be replaced in accordance with current District Rules and shall require permit approval.

However, an application for permit must be submitted to the District and approved prior to initiation of such replacement to assure compatibility of the completed work with the District's objectives including, but not limited to, restoration of the District's rights-of-way in an acceptable manner.

Permit application, review, and approval procedures shall be governed by District Rules.

Permit fees shall be established by Board Resolution pursuant to Section 298.22(9), F.S., and implemented through District Rules.

B. New Connections and Enlargement of Existing Connections

All drainage connections must discharge into the District sublateral canals and not the lateral canals.

Alternative discharge locations may be approved only where authorized by District Rule based on engineering justification and system capacity.

New connections and the enlargement or retrofit of existing connections discharging stormwater runoff to District canals shall be designed and installed to limit discharge from the drainage area served by the proposed connection.

Discharge limitations, including volumetric and rate criteria, shall be defined and enforced through District Rules.

The retrofit of existing connections proposed for use by the applicant shall be inspected and sealed by the Engineer of Record and approved by the District.

All retrofit designs must comply with current standards established in District Rules and be certified by a Florida Professional Engineer in accordance with Section 471.013, F.S.

Gravity connections - the applicant must demonstrate that a proposed installation will limit stormwater runoff to the volumetric equivalent of not more than 2 inches of depth over the area served including the upstream area for any 24-hour period from the 25-year frequency, 72-hour duration rainfall.

The 2-inch criterion is derived from the Plan of Reclamation, which allocates 2 acre-inches per acre of runoff depth for each tract within the District to its adjacent sublateral. Proposed connections should maintain discharge from each tract to its designated sublateral. Drainage area discharging against the Plan of Reclamation will not be allocated any drainage volume allowance towards the 2-inch limitation volume calculations.

The District requires drainage to be routed per the District's Water Control Plan. Sublateral ditches generally run east / west and are spaced ½ mile apart. Drainage from the north ¼ mile should be routed to the sublateral to the north and drainage from the south ¼ mile should be routed to the south to prevent overloading a sublateral canal. Applicants should refer to the Exhibit VII for the original district canal layout. Generally, each section has been divided into 16 (40-acre) tracts. A sublateral is located along each section line and half section line with a row of 40-acre tracts adjacent to both sides of each sublateral. Drainage from each tract shall connect to the adjacent sublateral.

Applicants shall demonstrate compliance with discharge limitations, including any 2-inch/24-hour volumetric criteria, consistent with Sections 373.016 and 403.061, F.S., and applicable provisions of Chapters 62-330 and 62-621, Florida Administrative Code (F.A.C.).

For drainage design purposes, the applicant shall contact the District for information concerning canal tailwater time vs. stage elevation for use in preparing the applicant's stormwater management system and the related drainage calculations.

All gravity drainage connections to District canals shall be made in accordance with the details shown on Exhibit III-B as incorporated by reference into the District Rules.

The applicant shall provide a surveyed cross-section through the canal at the location of the proposed connection, demonstrating the proposed configuration within the right-of-way. Design specifications (e.g., bank stabilization) may be imposed in order to prevent bank erosion. Survey and design requirements must comply with Section 472.027, F.S.

C. Water Quality and Storage Requirements

For all drainage connections, the application submittal shall include calculations to demonstrate that stormwater discharge from the site development is compliant with current state and federal water quality standards for the applicable receiving waters.

All discharges must comply with applicable standards adopted by the Florida Department of Environmental Protection (FDEP), the St. Johns River Water Management District (SJRWMD), and federal regulations, including but not limited to Sections 403.061 and 373.016, F.S., and Chapters 62-330 and 62-621, F.A.C.

Additionally, for all drainage connections and subject to District system limitations, the applicant shall submit calculations demonstrating that the storage volume of the water management facilities complies with applicable design criteria.

Where required, such criteria shall be consistent with the SJRWMD Applicant's Handbook or latest adopted rules for water quality.

1) Wet detention stormwater management systems must recover one-half of the treatment volume within 72 hours and recover to the design control elevation within 14 days following a 25-year / 24-hour storm event.

2) For dry retention and retention areas, the project shall recover the total storage volume within 72 hours after a 25-year / 24-hour storm event.

The above performance criteria are enforceable as required by applicable permits.

D. Connection Permit Requirements

A connection permit is required when a site's drainage improvements impact the District canal system. Examples of impacts include culvert crossings, control structure outfalls, and earthwork within the District right-of-way. All land development projects must obtain a connection permit. If the project involves a change in land use, a site review application must be submitted in conjunction with the connection permit.

1) All installation of connections shall be constructed in accordance with Exhibit III-B. This exhibit will also be required on the construction plans, and all connections must be denoted on the site plan.

2) The Permittee shall install and maintain connections in a manner that will prevent the introduction of vegetative growth into the District's canal system.

3) The use of private pumps for discharging water into District laterals or canals is prohibited.

   Private pumps are allowed only with the approval of the Board of Supervisors and supported by hydraulic analysis demonstrating no adverse impact, consistent with Section 298.22(5) and (8), F.S.

4) A perimeter containment berm is required. The natural grade or berm of the site near the property lines must be at least six inches above the 25- year / 24- hour peak stage of the stormwater system and tailwater. Adjacent properties' existing drainage patterns must be maintained with the proposed design.

5) All connections abandoned as part of improvements shall be removed or properly grouted to prevent uncontrolled discharge into the canal system.

6) Provide one surveyed cross-section of the proposed outfall and the sublateral right-of-way. At a minimum, surveyed elevations must be provided at each right-of-way line, sublateral top of bank, toe of slope, at the lowest point of the sublateral bottom, pipe diameter, length, and invert elevations. The location of any existing

improvements and their proximity to the outfall shall also be shown. Survey requirements shall comply with Section 472.027, F.S., and District Rules.

7) A project file from stormwater modeling software (e.g., ICPR Project.i4p or equivalent) must be submitted with permit application. Software format and submittal requirements are defined by the District Rule.

8) Provide a dated, signed, and sealed boundary and topographic survey prepared by a licensed Florida Surveyor. This requirement shall comply with Section 472.027, F.S., and District Rules.

9) All invasive exotic trees (Australian pines, pepper trees, etc.) and plants shall be removed from canal right-of-way within the limits of the subject project. All such trees/plants removed from the sloped banks of the canal shall be cut off evenly at ground/bank level and treated with an approved herbicide to prevent regrowth. Leave the root system in place to least disturb the bank of canal. The removal of such exotics lying landward of the top of slope of said canals can be removed conventionally with final grading of each canal berm sloping away from the top of canal bank.

10) Provide dated, signed, and sealed as-built plans prepared by a Surveyor licensed in the State of Florida within 30 days of the completion of the project. The certification form can be found on the District's website.

(REMAINDER OF PAGE INTENTIONALLY LEFT BLANK)

SECTION 5

OPEN CHANNEL CONNECTIONS

Open channel connections to District canals and laterals shall not be permitted, as such connections disrupt continuous access along canal rights-of-way, interfere with District maintenance operations, and may increase erosion, sediment transport, and public safety risks.

Existing open channel connections as shown on the Plan of Reclamation can remain.

(REMAINDER OF PAGE INTENTIONALLY LEFT BLANK)

SECTION 6

SPOIL DISPOSITION

All spoil material generated from the excavation, dredging, maintenance, or improvement of District canals, laterals, sublaterals, and rights-of-way shall remain the property of the District. No spoil material shall be removed, relocated, used, or disposed of without prior written authorization from the District.

The District may dispose of, allocate, transfer, sell, reuse, or retain spoil material in a manner deemed to be in the best interest of the District and its operations. At the District's discretion, spoil material may be made available to an adjacent property owner for use on the owner's adjacent property, provided such use does not adversely affect drainage, flood control, maintenance access, or District facilities.

Any person authorized to remove or use spoil material shall be responsible for repairing and restoring all affected District facilities, rights-of-way, canal banks, berms, access roads, and drainage structures. Restoration shall be performed in accordance with District standards and applicable exhibit requirements contained in this Manual.

Requests for spoil material shall be evaluated on a case-by-case basis. Approval is solely at the discretion of the District, and no landowner, contractor, or applicant shall have any entitlement to receive or use spoil material. The District may deny, condition, revoke, or modify any approval and may require restoration and recover costs associated with unauthorized removal or improper placement of spoil material.

This section constitutes an adopted rule of the District and is enforceable upon adoption of this Manual by the Board of Supervisors.

(REMAINDER OF PAGE INTENTIONALLY LEFT BLANK)

SECTION 7

UTILITY CONSTRUCTION

The installation, relocation, modification, or maintenance of utilities within District rights-of-way, canals, drainage structures, or associated easements is regulated by this Section as an adopted rule of the District upon adoption of this Manual by the Board of Supervisors.

All utility work within District jurisdiction shall be designed, permitted, constructed, and maintained in accordance with this Section and all incorporated exhibits and engineering standards.

A. Aerial Crossings

1) Overhead lines shall not be permitted to cross directly over District water control structures. Overhead communications and similar utility crossings over District water bodies are discouraged in favor of directional drill installations and will only be permitted as a variance granted by the Board.

2) If permitted by the District Board of Supervisors, overhead communication and similar utility line crossings of District rights-of-ways and Project Works shall have the following minimum vertical clearance as measured to the elevation of the lowest wire:

    a) For 115 KVA (or lower voltages) maintain a minimum of 45 feet for the lowest electrical conductor (40 feet for all other utilities) above the highest elevation of the canal maintenance road, as measured from the lowest point of sag.

    For higher voltages refer to Exhibit V for minimum clearances.

3) Overhead power lines shall have minimum vertical clearances as shown on Exhibit V. In all cases, minimum vertical clearance shall be measured from the elevation of the lowest point of sag of the line within the District right-of-way or easement to the highest point of the maintenance berm or dike crown.

4) General Prohibition

    Overhead or aerial utility lines shall not be permitted to cross directly over District water control structures, including gates, control structures, and operational facilities.

    Overhead crossings of District canals, drainage systems, or rights-of-way are prohibited unless expressly authorized under this Section and approved through District permitting procedures.

5) Authorization Standard and Clearance Requirements

Aerial crossings may only be permitted where the applicant demonstrates that:

- The crossing will not interfere with District maintenance or operations,
- Adequate vertical clearance is maintained,
- Structural safety is ensured under applicable engineering standards, and
- The crossing is consistent with District Rule standards and exhibits.

All approvals shall be documented in writing as part of the permit record.

All permitted aerial crossings shall comply with minimum vertical clearance requirements established in this Manual and incorporated Exhibit standards, which anticipate equipment at maximum operating level, and shall also comply with applicable utility safety standards and engineering best practices.

6) Variance Requirement

Any deviation from aerial crossing requirements shall be considered a formal variance under this manual, requiring written findings that the deviation:

- does not impair District operations,
- does not create a safety hazard, and
- does not increase maintenance burden on the District.

B. Over-Water Crossings

All utility crossings are required to be installed by directional drill since the safety and integrity of the utility lines cannot be ensured due to maintenance procedures of the canal system.

Electrical and communication aerial crossings may be allowed if they meet the requirements outlined in Exhibit V.

C. Under-Canal Crossings

Open cut installations of under canal crossings are prohibited. Under-canal utility crossings of any type including, but not limited to, communication cables and water or wastewater lines, shall be installed to provide a minimum cover of five (5) feet over the utility line in the sublaterals and eight (8) feet in the laterals, and 10 feet for the Main, North Relief, South Relief canals. This cover shall be measured from the top of the utility line's protective encasement to the existing canal bottom, original design section or, if known, ultimate section, whichever produces the lowest installation.

At a minimum, all communication and power lines shall be encased in a continuous length of seamless steel pipe, or approved equivalent, throughout the width of the canal right-of-way. A scaled drawing showing the existing cross-section of the canal and right-of-way with elevations referenced to NAVD88, along with a plan-view at the same scale shall be submitted with the application.

Geotechnical information, including boring log(s), should also be provided. If the issued permit involves the submission of boring logs for the utilization of the District's right-of-ways, and/or the crossing of District canal systems, the submitted bore logs as part of the final submission data must include a reference to an elevation datum, and not merely a bore depth indication. Furthermore, submitted bore logs are to be certified by the applicant.

HDPE-type plastic pipe may be used for directional bore installations only. Water, wastewater and similar pressurized lines transmitting non-volatile fluids or gases shall be buried with encasement. The encasement pipe shall meet the requirements of Standard Dimension Ration (SDR) 17 as a minimum strength. The carrier pipe shall meet the requirements of SDR 11 as a minimum strength. Directional drilled HDPE shall have a tracing wire in conformance with Indian River County standards.

Criteria for the crossing of other types of pressurized lines including, but not limited to, natural gas and steam lines, shall be determined and applied in accordance with Indian River County and industry standards at the time of application evaluation.

Vertical and horizontal spacing with other existing or proposed installations in the project vicinity shall be clearly shown on scaled construction plans, as well as the requirements provided below. Clearances must meet minimum requirements of the jurisdictional utility or governing agency.

The under-canal crossing shall be marked by the Permittee by placing permanent above-ground markers or signs over the utility at each canal right-of-way line. The markers must identify the type of utility buried and the name and contact telephone number of the utility owner. All markers must be clearly visible and must be maintained by the Permittee.

1) General Requirement

   All utilities installed beneath District canals shall be designed to avoid any impact to canal stability, flow capacity, or maintenance access.

   Open cut installation methods beneath canals are prohibited except where expressly approved under District Rule procedures. The minimum depths for clearance need to be provided (see Exhibit VI).

2) Cover and Protection Standards

   All under-canal utilities shall provide minimum cover and structural protection standards as established in this Manual and incorporated exhibits, sufficient to protect:

- canal integrity,
- bank stability, and
- District maintenance operations.

3) Material and Installation Requirements

   All utility crossings shall be constructed using materials and installation methods approved under District standards, including:

   - encasement requirements where applicable,
   - corrosion-resistant materials, and
   - tracer wire or marking systems where required.

4) Geotechnical Requirements

   Geotechnical borings and engineering analysis shall be required where necessary to demonstrate:

   - soil stability,
   - impact on groundwater flow, and
   - absence of risk to canal embankments.

5) Marker Requirements

   All buried utilities shall be permanently marked in accordance with District standards to ensure field identification and protection.

D. Utility Paralleling Canal or Right-of-Way

The District does not permit the installation of any for profit utility paralleling a canal within the canal right-of-way. If an applicant can demonstrate, to the satisfaction of the District's Board, that refusal to allow such an installation will result in an undue hardship, then the District may consider such an application. However, the establishment of criteria and terms and conditions of such approval, if granted, are solely within the jurisdiction of the Board.

If granted by the Board, the utility paralleling the right-of-way shall be installed no greater than five (5) feet from the right-of-way line with a minimum cover of three (3) feet, or a minimum depth provided by the District if there are drainage cross pipes. The utility shall be marked along the right-of-way line at a minimum spacing of 1,000 feet, and the installation

shall not impede the District's access, operation, maintenance, or future improvement activities within the right-of-way.

E. Right-of-Way Use Fee (Other Than for Municipalities & Governmental Agencies)

The use of the District's right-of-way should be under a separate license agreement as part of the approved permit process. The fee for utilization of the District's right-of-way is $1,750 per mile, or fraction thereof, on an annual basis. The minimal annual fee for such use is $1,750 per year (to be reviewed annually).

1) Fee Requirement

   Use of District rights-of-way by utilities shall be subject to a District-imposed license fee as established by Board Resolution and incorporated into this Manual.

2) Fee Structure

   The base right-of-way use fee is $1,750 per mile per year, subject to periodic review and adjustment by the District.

   All fees shall be:

   - payable prior to installation or as required by permit in 5-year renewable leases, and
   - non-refundable unless otherwise determined by the District.

F. General Utility

1) A certified as-built record drawing prepared by, and dated, signed, and sealed by, a Surveyor licensed in the State of Florida, depicting the horizontal and vertical location of the installed conduit, within the right-of-way of the said canal, shall be provided to the District within thirty (30) days of installation. The separation distance, locations of bore pits (start and end points) in State Plane Coordinates (NAD 83) must also be included.

2) The Applicant/Permittee is hereby cautioned that other permitted utilities and/or improvements exist in the general area of subject proposed conduit installation area. Applicant/Permittee shall be liable for damages to any existing permitted structures or utilities resulting from the installation of proposed conduits.

General Utility Provisions

1) As-Built Requirements

All permitted utility installations shall require submission of sealed as-built drawings prepared by a Florida Licensed Surveyor or Engineer, submitted within 30 days of completion.

2) Liability

All permittees shall be strictly liable for any damage to District facilities or operations caused by utility installation, maintenance, or failure.

The District may recover all costs associated with repair, restoration, or corrective action.

3) Compliance Enforcement

Failure to comply with this Section may result in:

- suspension or revocation of permits,
- denial of future applications,
- corrective action by the District at permittee expense, and
- recovery of all associated costs.

(REMAINDER OF PAGE INTENTIONALLY LEFT BLANK)

SECTION 8

OTHER USES AND REQUIREMENTS

The provisions of this Section govern miscellaneous uses of District rights-of-way, canals, structures, and associated lands. This Section is hereby adopted as an enforceable rule of the District upon adoption of this Manual by the Board of Supervisors, and shall apply to all District lands and facilities unless expressly modified by written District authorization.

A. Water Control Structure Installation and Operation

The installation of a water control feature on a culvert for water conservation and irrigation purposes by a landowner may be allowed by the District. The District shall evaluate each application and the potential impact it may have on its system to ensure that such a request is consistent with the District's objectives and does not adversely affect any upstream landowner.

All applications for water control structure installation shall be reviewed by the District Engineer and presented to the Board of Supervisors with a recommendation for approval, denial, or conditional approval. The Board of Supervisors shall have sole authority to approve or deny such applications. No water control structure shall be installed without prior written approval of the Board.

Such installations may only be authorized where the applicant demonstrates:

- no adverse impact to District drainage capacity or flood control, and
- no interference with District maintenance or operations.

All approved installations shall be designed, constructed, and maintained in accordance with District engineering criteria and permit conditions incorporated into this Manual.

B. Beehives

The District is required by law to adopt and use methods and processes that are reasonably adequate to render any place of employment safe and to protect the well-being of its employees. Therefore, the placement of beehives on District rights-of-ways shall not be permitted.

C. Use of District Rights-of Way for Access

The District is provided a right-of-way for the purpose of operating and maintaining the District's system. Such rights of ways are not presumed to be opened for access by District landowners except those landowners adjacent to the right-of-way and solely for the purpose of access and not obstruct or hinder the capability of the District to operate and maintain the District system. The District may have the need to alter the design of the drainage system in the future; therefore, the location of the access is not a perpetual use. District rights-of-way

are not public access corridors and shall not be used for general vehicular or pedestrian access unless expressly authorized by the District.

All access use shall comply with District Rule provisions established in this Manual and permit conditions.

D. Maintenance Access for Open Canals Adjacent to Roadways

The IRFWCD operates heavy equipment to mow the canal berms, side slopes, and clean sand bars, vegetative blockages out of the canal flow line. Some of the requirements to provide safe access for this work are as follows:

1) A minimum of 15' clear width of designated maintenance access between any obstruction and the top of canal bank (the berm).

2) The berm must slope away (1-2%) from the top of canal bank to prevent over-top flow and soil erosion. Stormwater management systems are not permitted in the maintenance access area due to the damage that may occur by the heavy equipment.

3) Catch basins, maintenance hole covers, electrical boxes, etc. must be rated for heavy duty wheel loads if located in the berm.

4) F curbs between the edge of road and the top of bank impede the equipment access and are not allowed.

5) Guard rails are discouraged but may be allowed if within (3) feet of the top of bank and must be fitted with a horizontal metal rail to isolate the guard rail posts from cable equipment included on a drag line. Also, the guard rail posts must be reinforced with misc. asphalt at the ground level.

6) If guard rails are located 20+ feet from the top of canal slope, there must be "openings" or breaks along the guard rails to allow equipment access to the maintenance berm.

7) Adequate drainage along the subject property line adjacent to the designated maintenance access.

The District requires uninterrupted access to canals, ditches, and drainage facilities for maintenance purposes, including mowing, excavation, and structure maintenance.

Accordingly:

- No obstruction shall be placed within District rights-of-way that impairs maintenance access;

- Clear access corridors extending a minimum of 15' from the canal bank shall be maintained as required by District standards; and

- Any encroachment shall be subject to removal or correction at the permittee's expense.

All requirements shall be enforced under this Manual as adopted rule provisions.

E. Fencing of Canal Right-of-Way for Livestock

The capability to move water through the District's system of canals is essential for drainage and irrigation purposes. Anything that inhibits or diminishes this capability is contrary to District policy and state law. The uncontrolled movement of livestock across a canal without the benefit of a culvert or bridge crossing is one way that the effectiveness of a canal can be degraded. Not only do livestock carry material into the canal from the canal bank and the berm, but the path they create accelerates erosion, aggravating an already unacceptable condition.

Therefore, it is the policy of the District that the owner of any property used for livestock grazing or production adjacent to a District canal must fence that property to prevent the unauthorized movement of livestock across the canal right-of-way. Anyone contemplating the installation of fence along an IRFWCD right-of-way should contact the District to review the fence location before installation.

If livestock owners wish to have livestock cross a canal, it must be over a culverted or bridged crossing meeting the District's regulations. A permit application must be submitted by the Applicant and approved by the District before the culvert may be installed.

Fence design, placement, and maintenance requirements shall be governed by District standards established in this Manual and enforceable as adopted rules.

Failure to maintain required fencing may result in District corrective action at the landowner's expense.

F. Access Gates in Right-of-Way

A landowner may install an approved swing gate on a District canal berm. Landowners are required to coordinate with the District to ensure the following criteria are met:

1) The gate must be at least sixteen (16) feet wide to accommodate District maintenance equipment.

2) The construction materials and installation methods must be coordinated with and approved by the District.

3) Both the District and the landowner may use their own locks to ensure both parties have access. Locks to be placed such that either party can gain access by removing only their lock. If necessary, chains shall be used to lock the gates.

4) The gate must be continuously maintained by the landowner. At all times, the District shall have the right to operate any private gate located on District right-of-way

without any interruption. The District maintains the right to remove, modify, or replace any private gate on District right-of-way should the landowner be non-compliant with the operation and maintenance protocols of the District at the landowner's expense.

5) The District shall be indemnified of any future liability.

G. Docks / Observation Structures

District canals are operated and maintained, to the extent possible, to provide for an unobstructed flow way which achieves the best level of flood protection. Therefore, docks, observation platforms, decks, or similar structures within or over District rights-of-way or canals are prohibited, due to interference with drainage operations, safety concerns, and maintenance limitations.

H. Plantings and Vegetation

No trees, shrubs, landscaping, or other plantings shall be placed within District rights-of-way except for approved turf or groundcover necessary for erosion control. Vegetation must not obstruct drainage, interfere with District access, or affect canal bank stability. The canal slope is to be graded in accordance with the District's specifications.

I. Windbreaks

Any installation by landowners serving the purposes of a windbreak shall be installed fifty (50) feet from the centerline of the right-of-way or thirty (30) feet (horizontal and vertical clearance) from the top of the bank of sublaterals, whichever provides the greater distance from the top of bank. IRFWCD lateral and sublateral right-of-ways vary in width, and setbacks may exceed those of sublaterals and will be addressed on a case-by-case basis. Such windbreaks installation shall be maintained by the landowner. Failure to maintain windbreaks, which then become an obstruction to the District's ability to perform operations and maintenance activities, will be cause for removal of the windbreak by the District at the landowner's expense.

ENFORCEMENT CLAUSE (APPLICABLE TO ENTIRE SECTION 8)

Upon adoption of this Manual by the Board of Supervisors, all provisions of this Section shall constitute enforceable District rules. The District reserves the right to issue notices of violation, suspend or revoke permits, undertake corrective actions as necessary, and recover all costs associated with enforcement activities, corrective measures, removal, or restoration efforts.

(REMAINDER OF PAGE INTENTIONALLY LEFT BLANK)

APPENDIX A

APPENDIX A-1

Stormwater Discharge - 2”/24-Hour Discharge Limitation

ORIGINAL MEMORANDUM ISSUED ON APRIL 10, 1992
FROM MICHAEL O’HAIRE
LAW OFFICES OF SMITH, O’HAIRE, QUINN & SMITH

TO: DENNIS RAGSDALE, PLANNING DIRECTOR
CITY OF VERO BEACH

CLIFF SUTHARD, CITY ENGINEER
CITY OF VERO BEACH

ROBERT KEATING, DIRECTOR OF COMMUNITY DEVELOPMENT
INDIAN RIVER COUNTY

JIM DAVIS, DIRECTOR OF PUBLIC WORKS
INDIAN RIVER COUNTY

RE: INDIAN RIVER FARMS WATER CONTROL DISTRICT

I have been asked to write you on behalf of our client, the Indian River Farms Water Control District. As you know, last year, the District adopted discharge limitations into the District's works and system in the event of new construction or change of use. Indian River County has incorporated the District's limitations into its Comprehensive Land Use Plan and Land Development Regulations. This letter is to re-affirm the requirement that all development within the District must comply with the District’s requirements as follows:

1. City and County - Change of Use - Projects shall meet the 2 inches per 24-hour discharge rate during a 25-year storm event for the entire site.

2. For new projects and partial site expansions/modifications:

    a) County - Major site plans shall require the 2 inches per 24 hour discharge rate during a 25-year storm event for the development area of the site plan.

    b) County - Minor and Administrative approval site plans are exempt from the 2-inch discharge rate; however, they shall meet the post-development discharge rate not exceeding the pre-development discharge rate from the area of development.

    c) City - Site plans which contain 5,000 S.F. of new impervious area, or the development of a 2,000 S.F. building, shall meet the 2 inches per 24-hour discharge rate of a 25-year storm event for the development area of the site plan.

d) City - Site plan modifications of less impervious area than stated in 2c) shall be exempt from the 2-inch discharge rate; however, they shall meet the post-development discharge rate not exceeding the pre-development discharge rate from the area of development.

This matter was brought to the District's attention when the County's courthouse project within the City was presented to the District. Apparently, District requirements had been overlooked. Please advise applicants for site plan approval or modifications of the District's requirement and of the fact that application forms are available at the District's office on State Road 60 and that the permit and application fee is in the amount of $300.00.

MICHAEL O'HAIRE
MOH / pkm

cc: Indian River Farms Water Control District

(REMAINDER OF PAGE INTENTIONALLY LEFT BLANK)

APPENDIX A-2

Stormwater Discharge - 2"/24-Hour Discharge Limitation

ORIGINAL MEMORANDUM ISSUED ON FEBRUARY 29, 2000
REVISED AUGUST 20, 2026 (FORMAT ONLY)

RE: IRFWCD - Stormwater Discharge 2"/24 Hr. Limitation Clarifications

The following clarifications will assist all stormwater design engineers working within the district as well as the city and county engineers reviewing plans as to the appropriate methodology for meeting the 2" rule.

1. The design storm event is a 25 year-24-hour event. The storm event rainfall hydrograph shall be modeled using either the Santa Barbara Urban Hydrograph Method or the S.C.S. Unit Hydrograph Method. The Rational Hydrograph Method shall not be used.

2. The 2-inch limitation applies to any 24-hour period from hour 0 through hour 72, (hour 10-34, 14-38 etc.). Provide hourly accumulative discharge volume from hour 0 through hour 72, and note the maximum 24-hour discharge period and volume in acre-feet.

3. The peak stage elevation for the project's receiving water shall be determined using the results of CAI/Williams, Hatfield and Stoner study (IRFWCD Study) titled "Evaluation and Updating of the Plan of Reclamation Works of Improvement dated August 1988 (July 1990 revised) as follows:

   a) Identify the IRFWCD System Junction number(s) which is the closest to the specific project site. (Refer to the District Maps, i.e., Figure 6.4.)

   b) Identify the maximum computed stage (NGVD) for the Junction selected in part 3A from 25 year - design storm (refer to the Summary Statistics for Junctions as listed in IRFWCD Study Appendix C).

   c) The time (hour) of the maximum stage is estimated by relating the time of occurrence from the study (72-hour event) peak stage to the 24-hour storm model as follows:

District Study	Proposed Project
Hr. 48	Hr. 0
Hr. 60	Hr. 12
Hr. 72	Hr. 24
Hr. 96	Hr. 48
Hr. 120	Hr. 72

   d) The time/stage elevation relationship of receiving water can be estimated by correlating the project site location with the IRFWCD study results. Twenty (20) junction locations are listed under the "Time History of H.G.L." The time/stage relationship of the junctions are noted from Hr. 36 through Hr. 96. The project's

receiving water time/stage relationship can be estimated by interpolating/extrapolating between the adjacent junction nodes.

Note: The time stage relationship for each of the (20) nodes to be used in modeling the 25-year/24-hour storm event is noted below.

e) All District outfall canals have gate structures which control the water elevation upstream of them at elevation 15.5± (NGVD). These gates can be opened during a rainfall event which may temporarily result in a water elevation less than 15.5. However, we recommend that all project sites discharging upstream of a gate structure be modeled at a minimum elevation of 15.5.

4. Within the project site, all flood plain storage must be maintained from pre to post development. Predevelopment calculations shall be based on existing site conditions (NGVD) as determined by a Florida Registered Land Surveyor. Post development calculations shall be based on the final design grades. The 100 yr. flood elevation shall be based on the results of the IRFWCD study calculated using the same methodology as noted for establishing the 25-year peak in number 3 above.

(REMAINDER OF PAGE INTENTIONALLY LEFT BLANK)

APPENDIX A-2

IRFWCD
STORMWATER DISCHARGE 2″/24 HR LIMITATION
TIME VS STAGE ELEVATIONS FOR (20) NODES
April 25, 2000

NODE	25 YR-24 HR STORM EVENT (HR)	STAGE ELEVATION@ NODE (NGVD)
9133	0	10.4
	10	11.0
	12	13.3
	14	15.5
	20	16.08
	26	16.0
	48	15.4
	60	14.9
	72	14.3

NODE	25 YR-24 HR STORM EVENT (HR)	STAGE ELEVATION @ NODE (NGVD)
9119	0	15.5
	12	15.5
	14	17.9
	16	18.6
	24	19.1
	28	19.1
	48	18.5
	60	17.9
	72	17.1

NODE	25 YR-24 HR STORM EVENT (HR)	STAGE ELEVATION @ NODE (NGVD)
189	0	5.3
	8	5.7
	16	13.8
	18	13.7
	24	12.7
	28	11.9
	30	11.3
	48	10.1
	60	9.5
	72	8.8

20 NODES / TIME VS STAGE
IRFWCD STORMWATER DISCHARGE 2″/24 HR.

NODE	25 YR-24 HR STORM EVENT (HR)	STAGE ELEVATION @ NODE (NGVD)
9159	0	15.5
	12	15.5
	14	17.7
	16	18.4
	20	18.2
	24	18.1
	36	17.6
	48	17.3
	60	16.9
	72	16.4

NODE	25 YR-24 HR STORM EVENT (HR)	STAGE ELEVATION @ NODE (NGVD)
9055	0	15.5
	12	15.5
	14	17.7
	16	18.2
	24	18.6
	26	18.63
	30	18.6
	40	18.2
	48	17.7
	60	17.0
	72	16.2

NODE	25 YR-24 HR STORM EVENT (HR)	STAGE ELEVATION @ NODE (NGVD)
8191	0	4.5
	10	6.4
	12	10.4
	14	13.0
	16	13.4
	24	13.2
	30	13.0
	42	12.0
	48	11.6
	60	11.0
	72	10.0

20 NODES / TIME VS STAGE
IRFWCD STORMWATER DISCHARGE 2″/24 HR.

NODE	25 YR-24 HR STORM EVENT (HR)	STAGE ELEVATION @ NODE (NGVD)
9134	0	2.8
	10	3.3
	12	5.2
	14	5.6
	16	5.64
	24	5.5
	38	5.4
	48	5.3
	60	5.1
	72	4.8

NODE	25 YR-24 HR STORM EVENT (HR)	STAGE ELEVATION @ NODE (NGVD)
9083	0	18.8
	12	18.9
	14	20.7
	16	21.8
	20	22.04
	24	22.0
	36	21.6
	48	20.9
	60	20.2
	72	19.5

NODE	25 YR-24 HR STORM EVENT (HR)	STAGE ELEVATION @ NODE (NGVD)
190	0	2
	12	2
	24	2
	48	2
	72	2

20 NODES / TIME VS STAGE
IRFWCD STORMWATER DISCHARGE 2″/24 HR.

NODE	25 YR-24 HR STORM EVENT (HR)	STAGE ELEVATION @ NODE (NGVD)
68	0	19.0
	10	19.5
	12	21.8
	14	23.8
	16	23.93
	24	23.8
	30	23.7
	36	23.5
	48	22.9
	60	22.2
	72	21.4

NODE	25 YR-24 HR STORM EVENT (HR)	STAGE ELEVATION @ NODE (NGVD)
5	0	19.5
	6	20.5
	10	21.5
	12.5	23.6
	14	23.5
	24	23.3
	30	23.1
	36	23.0
	48	22.7
	60	22.0
	72	21.2

NODE	25 YR-24 HR STORM EVENT (HR)	STAGE ELEVATION @ NODE (NGVD)
25	0	11.6
	4	12.1
	10	13.0
	12	16.0
	14	17.2
	18	17.68
	24	17.6
	30	17.2
	36	15.9
	48	14.2
	60	13.4
	72	12.8

20 NODES / TIME VS STAGE
IRFWCD STORMWATER DISCHARGE 2″/24 HR.

NODE	25 YR-24 HR STORM EVENT (HR)	STAGE ELEVATION @ NODE (NGVD)
50	0	8.6
	10	9.6
	12	13.5
	14	15.7
	16	16.13
	18	16.1
	24	15.9
	30	15.5
	38	14.5
	48	13.5
	60	12.9
	72	12.2

NODE	25 YR-24 HR STORM EVENT (HR)	STAGE ELEVATION @ NODE (NGVD)
37	0	15.8
	10	16.2
	12	17.6
	14	19.5
	16	19.9
	24	20.2
	29	20.28
	36	20.2
	48	19.8
	60	19.3
	72	18.6

NODE	25 YR-24 HR STORM EVENT (HR)	STAGE ELEVATION @ NODE (NGVD)
86	0	15.7
	12	16.6
	14	18.8
	18	19.7
	24	20.2
	30	20.3
	36	20.2
	48	19.9
	60	19.3
	72	18.6

20 NODES / TIME VS STAGE
IRFWCD STORMWATER DISCHARGE 2″/24 HR.

NODE	25 YR-24 HR STORM EVENT (HR)	STAGE ELEVATION @ NODE (NGVD)
87	0	17.3
	8	18.4
	10	19.1
	12.5	22.3
	14	22.1
	16	21.6
	24	20.4
	36	19.8
	48	19.2
	60	18.6
	72	18.0

NODE	25 YR-24 HR STORM EVENT (HR)	STAGE ELEVATION @ NODE (NGVD)
127	0	16.2
	10	16.6
	12	17.2
	14	20.1
	16	20.5
	17.5	20.6
	24	20.5
	36	20.4
	48	20.2
	60	19.6
	72	18.9

NODE	25 YR-24 HR STORM EVENT (HR)	STAGE ELEVATION @ NODE (NGVD)
105	0	16.0
	10	16.6
	12	17.2
	14	19.8
	16	20.4
	20.5	20.5
	24	20.5
	36	20.3
	48	20.0
	60	19.4
	72	18.7

20 NODES / TIME VS STAGE
IRFWCD STORMWATER DISCHARGE 2″/24 HR.

NODE	25 YR-24 HR STORM EVENT (HR)	STAGE ELEVATION @ NODE (NGVD)
146	0	16.0
	10	16.6
	12	17.7
	14	19.9
	16	20.3
	18	20.3
	24	20.3
	26	20.34
	30	20.3
	38	20.2
	48	20.0
	60	19.5
	72	18.8

NODE	25 YR-24 HR STORM EVENT (HR)	STAGE ELEVATION @ NODE (NGVD)
174	0	16.0
	8	16.8
	10	17.7
	12	21.8
	14	22.03
	16	21.7
	24	20.8
	38	20.3
	48	20.0
	60	19.5
	72	18.8

(REMAINDER OF PAGE INTENTIONALLY LEFT BLANK)

APPENDIX B

APPENDIX B-1

Floodplain Cut and Fill Policy

ORIGINAL MEMORANDUM ISSUED ON MAY 31, 2005

TO: Marvin E. Carter, Michael O'Haire and David Gunter

FROM: George A. Simons, P.E.

THROUGH: Dean F. Luethje, P.E.

RE: IRFWCD - Clarifications Regarding:
Flood Plain Cut and Fill Policy for the 100-Year Storm Event and 2"/24-hour Discharge Limitation for the 25-Year Storm Event Within Development Sites and Affidavits of Exemptions (AOE)

DATE: May 31, 2005, Second Revision of August 17, 2005

CAI requests that the supervisors formally accept the clarifications noted below. The clarifications are based on the results of a meeting held on May 20, 2005, in which the methodology of calculating the cut and fill balance within flood plain areas was discussed with county engineers and local consulting engineers. Additional clarifications to the 2"/24-hour policy were also discussed. The clarifications will assist all stormwater design engineers working within the district as well as the city and county engineers reviewing plans as to the appropriate methodology for meeting the flood plain cut and fill and the 2"/24-hour limitation policies.

A. Flood Plain Calculations and Compensation for a Development Site - 100-Year Storm Event

1. Within the project site, all flood plain storage must be maintained from pre to post development. Predevelopment calculations shall be based on existing site conditions (1929 NGVD) as determined by a Florida Registered Land Surveyor. Post development calculations shall be based on the design grades. The design engineer must select the 100-year flood elevation from the FIRM maps or on the results of the IRFWCD study.

2. The flood plain encroachment (fill) is based on the volume of proposed fill between the existing ground, (or the wet season water table if a lake or wetland is present) and the 100-year flood elevation. Fill above the 100-year elevation is not displacing flood waters and therefore not included.

3. The volume of flood plain compensating storage (cut) is based on the volume of cut between the existing ground and the wet season water table. If a wet detention system is used for the flood plain storage compensation, then the control elevation of the bleed down weir shall be used as the lower elevation of the cut volume calculations. The upper elevation of the compensating storage volume calculations is the ground elevation or the 100-year flood elevation if it is below the existing ground elevation.

4. Flood plain compensating storage (cut) calculations, which include volume above the 100-year flood plain elevation, are not allowed, regardless if there is an onsite peak stage above the 100-year flood plain elevation at some point during the computer modeling of the event.

5. The flood waters within the District canals must be allowed to flow into the development's flood storage area when the District's canal system is above the flood storage area water levels within the development. Therefore, the stormwater outfall connection must meet the following criteria:

    a. Flap gates are not allowed.
    b. The pipe connections shall be of a large enough diameter that the head loss is minimal and flows maximized. Small diameter pipes designed to meet the 2" limitation rule will restrict the flows during a flood event and therefore, are not allowed. Weirs/Orifices shall be utilized. The typical overflow structure which has a restrictive orifice(s) for the 2" limitation will include a larger weir at the onsite 25-year storm elevation. During storm events larger than the 25-year storm, the larger weir will allow the flood waters from the District canals to move freely into and out of the development storage area. It is understood that below the 25-year storm elevation the inflow from District canals may be restricted to the 2" limitation orifice.

6. An off-site compensating flood storage area may be utilized to balance the cut and fill for a project in which the onsite flood storage is inadequate under the following conditions:

    a. The off-site flood storage area is located within the same sublateral drainage basin.
    b. The off-site flood storage area has approximately the same 100-year flood elevation (0.1'+/-).
    c. The off-site flood storage area must be encumbered with development restrictions to preserve the flood storage for the proposed project. The proposed project shall include homeowners' association duties to preserve and maintain the off-site area in regards to function and appearance. In cases where the off-site flood storage area is itself a development, then the homeowners' association which covers the site must be required to preserve and maintain the site through deed restrictions.

7. Previously approved projects cannot be utilized to compensate for flood storage for future developments.

B. <u>2"/24-hour Discharge Limitation Clarifications - 25-Year Storm Event</u>

1. The 2"/24-hour Volume Discharge Limitation design storm is the 25-year - 24-hour event with the discharge analyzed for 72 hours.

2. Each site is allowed 2"/24-hour of net positive discharge during a storm event for any given 24-hour period following a storm event. Some projects may experience a backflow of water from the District's canal system (receiving water) onto the site during a storm event. This flow may result in a negative discharge of runoff volume onsite, (i.e., the site's rainfall runoff plus the backflow from off-site flood waters results in net negative discharge due to the flood storage). The 2"/24-hour criteria does not apply during the

discharge of the (received from District canals) off-site flood waters. However, when the stormwater system has discharged the off-site flood waters and the discharge of runoff generated from onsite begins, then the 2"/24-hour limitation is required. Additional flow to "catch up" with the discharge volume allowance lost during the time of negative flows is not allowed. Each 24-hour period must stand alone to meet the 2"/24-hour limitation criteria. If the overflow weir elevation of a lake is set at the 25-year storm elevation for the development, then flows in and out above this elevation could be greater than the 2"/24-hour criteria.

3. Affidavit of Exemptions (AOE) projects must limit the number of discharge points into the IRFWCD sublateral canals by incorporating collector ditches/swales into the design. The collector ditches will convey the discharge from the individual lots to a common outfall to the district canals. One (1) outfall is preferred per development, two (2) may be allowed, with requests being reviewed on a case-by-case basis. Existing conditions or site geometry will be considered.

4. Affidavit of Exemptions (AOE) projects which include a platted road shall include a stormwater system designed to limit the discharge to 2"/24-hour from the platted road drainage basin. Platted lots are not required to meet the 2" limitation since only minimal increased discharge volume is anticipated. However, if the platted road drains to a stormwater lake which is shared with the platted lot, then the lot must be included in the 2"/24-hour limitations calculations, and the lake must be constructed when the road is constructed.

(REMAINDER OF PAGE INTENTIONALLY LEFT BLANK)

APPENDIX B-2

Floodplain Cut and Fill Policy

ORIGINAL MEMORANDUM ISSUED ON OCTOBER 13, 2020

RE: IRFWCD - Clarifications Regarding: August 17, 2005 Memo regarding the Flood Plain Cut and Fill Policy for the 100-Year Storm Event

DATE: October 13, 2020 (Modified July 1, 2026 - Format Only)

David Gunter, IRFWCD Superintendent recently became aware of a discrepancy between the FEMA FIRM maps and the IRFWCD stormwater model results. Mr. Gunter engaged CAI to prepare a clarification for presentation to the IRFWCD Board. That clarification is provided below in Part A.1. The clarification is required due to a recent review of topographical survey information for a proposed project in which the existing grades are below the 100-year flood elevation; however, the FEMA maps indicate that the area is Flood Zone X (area of minimal flood hazard). The IRFWCD methodology for demonstrating compliance with the IRFWCD Maintenance of Flood Plain Storage Policy allows the design engineer to select the 100-year Flood elevation from either the FEMA FIRM Maps or the IRFWCD study. The design engineer looked at the FEMA FIRM map and determined that the site is not in a Flood Zone. The design engineer elected to use the FEMA FIRM Map and did not consider the IRFWCD model results in determining if the site was required to maintain the Flood Plain Storage.

The case in point is near the intersection of Oslo Road and 43rd Avenue. A review of FEMA FIRM 12061 CO358 H appears to depict 43rd as a water shed boundary. Land west of 43rd is in Flood Zone AE 20 and land east of 43rd is in Flood Zone X. The IRFWCD Sublateral B-7 extends across 43rd Avenue and allows water to equalize during a flood event, if the FEMA FIRM map flood elevation of 20.0 NAVD is used the water would inundate the subject site. The IRFWCD model result for the peak stage during the 100-year event is elevation 19.5 NAVD, (ref. IRFWCD Node 39 elevation 21.0 NGVD) well above the existing grades, (17.5+/- NAVD). Given the fact that the site currently floods, IRFWCD landowners may be negatively impacted if this site does not provide the same flood storage in the future after development.

The clarification needed will assist all stormwater design engineers working within the district as well as the city and county engineers reviewing plans as to the appropriate methodology for meeting the flood plain cut and fill policy.

A. Flood Plain Calculations and Compensation for a Development Site - 100-Year Storm Event

1. Within the project site, all flood plain storage must be maintained from pre to post development. Predevelopment calculations shall be based on existing site conditions (1929 NGVD or NAVD 88) as determined by a Florida Registered Land Surveyor. Post development calculations shall be based on the design grades. The design engineer must review both the FIRM maps and the IRFWCD study and select the 100-year flood elevation. However, if the site floods per the IRFWCD study and is depicted as a FIRM map Zone X, then the design engineer must use the IRFWCD model results and comply with the maintenance of Flood Plain Storage Policy.

2. The flood plain encroachment (fill) is based on the volume of proposed fill between the existing ground, (or the wet season water table if a lake or wetland is present) and the 100-year flood elevation. Fill above the 100-year elevation is not displacing flood waters and therefore not included.

3. The volume of flood plain compensating storage (cut) is based on the volume of cut between the existing ground and the wet season water table. If a wet detention system is used for the flood plain storage compensation, then the control elevation of the bleed down weir shall be used as the lower elevation of the cut volume calculations. The upper elevation of the compensating storage volume calculations is the ground elevation or the 100-year flood elevation if it is below the existing ground elevation.

4. Flood plain compensating storage (cut) calculations, which include volume above the 100-year flood plain elevation, are not allowed, regardless if there is an onsite peak stage above the 100-year flood plain elevation at some point during the computer modeling of the event.

5. The flood waters within the District canals must be allowed to flow into the development's flood storage area when the District's canal system is above the flood storage area water levels within the development. Therefore, the stormwater outfall connection must meet the following criteria:

    a. Flap gates are not allowed.
    b. The pipe connections shall be of a large enough diameter that the head loss is minimal and flows maximized. Small diameter pipes designed to meet the 2" limitation rule will restrict the flows during a flood event and therefore, are not allowed. Weirs/Orifices shall be utilized. The typical overflow structure which has a restrictive orifice(s) for the 2" limitation will include a larger weir at the onsite 25-year storm elevation. During storm events larger than the 25-year storm, the larger weir will allow the flood waters from the District canals to move freely into and out of the development storage area. It is understood that below the 25-year storm elevation the inflow from District canals may be restricted to the 2" limitation orifice.

6. An off-site compensating flood storage area may be utilized to balance the cut and fill for a project in which the onsite flood storage is inadequate under the following conditions:

    a. The off-site flood storage area is located within the same sublateral drainage basin.
    b. The off-site flood storage area has approximately the same 100-year flood elevation (0.1'+/-).
    c. The off-site flood storage area must be encumbered with development restrictions to preserve the flood storage for the proposed project. The proposed project shall include homeowners' association duties to preserve and maintain the off-site area in regards to function and appearance. In cases where the off-site flood storage area is itself a development, then the homeowners' association which covers the site must be required to preserve and maintain the site through deed restrictions.

7. Previously approved projects cannot be utilized to compensate for flood storage for future developments.

APPENDIX B-3

Floodplain Cut and Fill Policy

ORIGINAL MEMORANDUM ISSUED ON JANUARY 6, 2023

DATE: January 6, 2023 (Modified July 1, 2026 - Format Only)

The following is a proposed change concerning the acceptable methods to satisfy the "IRFWCD Connection to District" permit review criteria to address the maintenance of the 100-year flood plan storage criteria for proposed development projects. This applies for both project areas designated on FEMA Maps as flood zones and other IRFWCD areas that are inundated by the 100-year flood as determined by the IRFWCD Stormwater model, (Reference - IRFWCD Memo Dated October 13, 2020).

The IRFWCD adopted the maintenance of flood plain criteria in 2005 as memorialized in the August 17, 2005 Memo. Paragraph A.7 on this Memo prohibited previously approved projects from being utilized to compensate for flood storage for future developments. This proposed permitting policy change provides for a limited use of excess flood plain storage capacity on previously approved projects as follows:

1. Paragraphs A.1 - A.6 from the 2005 Memo are addressed.
2. The project Engineer of Record has exhausted all efforts to achieve the maintenance of the 100-year flood storage on-site.
3. The new rule would allow a landowner/developer to acquire existing excess flood plain storage from a previously approved project if the following requirements are met:

    a. The IRFWCD staff reviews and accepts the amount of excess storage available.
    b. A recorded drainage easement between the two parties with an acceptable sketch and description of the location of the excess flood plain storage is provided.
    c. The existing excess flood plain storage must be within the same drainage basin and the modeled 100-year storm peak stage is within 0.1 foot.

The developer/engineer is strongly encouraged to include the IRFWCD maintenance of flood plain storage requirement as part of due diligence and addressed in the project's initial design prior to applying to SJRWMD for an ERP.

(REMAINDER OF PAGE INTENTIONALLY LEFT BLANK)

APPENDIX C

APPENDIX C-1

Pipe Material Clarifications

ORIGINAL MEMORANDUM ISSUED ON JUNE 30, 2020

RE: IRFWCD - Clarifications Regarding: Pipe Material Requirements for the Culverting of IRFWCD Sublaterals under Public Roadways and Private Lands. Pipe Material Requirements for Driveways Crossing IRFWCD Sublaterals

DATE: June 30, 2020 (Modified July 1, 2026)

Pipe failures (due to corrosion and metal loss) in IRFWCD Canals cause significant impacts to drainage service and must be removed immediately, sometimes by District crews. Removal and repair costs are especially high if the pipe failure is under a canal crossing with expensive embellishments such as road improvements, headwalls, signs, pavers, and etc. These failures usually present an unexpected and unbudgeted expense for the responsible maintenance entity which may cause delays in funding the removal and replacement. District crews may be required to remove the pipe in order to maintain the drainage service for the landowners upstream. District equipment, labor, and dump fee costs to remove these improvements are excessive and difficult to get reimbursed.

District staff recommends the adoption of a resolution requiring reinforced concrete pipe (RCP) for future pipe installations involving expensive embellishments such as impervious road improvements, headwalls, signs, pavers, and etc. in all District canals as a condition of permit approval.

Canal crossings throughout the District may utilize CMP or Aluminum Corrugated pipe material with the end treatments of rock rubble or broken concrete over filter fabric provided no expensive embellishments such as impervious surface, headwalls, signs, pavers, etc. are constructed. If the driveway is off a paved road the County typically requires a paved apron. If the proposed canal crossing includes any asphalt that extends over the canal cross section the pipe must be RCP.

Culverting District Canals with HDPE type pipe material may be acceptable for areas such as a golf course. Approval will be on a case-by-case basis with consideration to wheel loads from construction traffic, pole trucks, IRFWCD maintenance equipment, etc.

(REMAINDER OF PAGE INTENTIONALLY LEFT BLANK)

In Summary see the matrix below:

Location	**Pipe Material**	
	CMP/Aluminum/HPPP	RCP
Private Driveway Stabilized Only - No Embellishment	Permitted	Optional
Private Driveway With Embellishment (See Note #1)	N/A	Required
Private Canal Culverting Golf Course, Grass Areas	Permitted (See Note #2)	Optional
Public Use Driveway Stabilized Only - No Embellishment	Permitted	Optional
Public Use Driveway With Embellishment (See Note #1)	N/A	Required
Public Use Canal Culverting	N/A	Required
Public Use Subdivision D/W	N/A	Required

1. Embellishments such as impervious road improvements, headwalls, signs, pavers, etc.
2. HDPE pipe may be permitted on a case-by-case basis.

(REMAINDER OF PAGE INTENTIONALLY LEFT BLANK)

EXHIBIT I

DESIGN SIZES FOR CULVERTED CROSSINGS IN DRAINAGE SUBLATERALS

(see next page for exhibit)

EXHIBIT I
DESIGN SIZES FOR CULVERTED CROSSINGS IN DRAINAGE SUBLATERALS

Sublateral Distance upstream of (1 Mile or Less) Lateral	Culvert Diameter (in inches)
0.25 or less	72” RCP
0.25 - 0.50	66” RCP
0.50 or more	60” RCP

Sublateral Distance upstream of (2 Mile or Less) Lateral	Culvert Diameter (in inches)
0.50 or less	84” RCP
0.50 - 1.0	72” RCP
1.0 or more	60” RCP

Sublateral Distance upstream of Lateral D	Exception to the above sizes applies to Sublaterals D-4 and D-5
1.0 or less	84” RCP
1.0 - 2.0	72” RCP
2.0 or more	60” RCP

Notes:

1. Design discharge for culvert crossings of drainage sublaterals shall be based on a maximum flow of four inches per day over the drainage area. The rate of four inches per day is equivalent to 107.56 cubic feet per second per square mile (CSM).
2. Head losses as a result of a culvert crossing shall not exceed 0.1 foot.
3. Each culvert shall be set at an elevation based on a uniform slope from upstream high point to the sublateral outfall. The District Administrator and/or Engineer shall confirm the culvert size and invert elevation.
4. In most cases the culvert inverts will be fully submerged during its use, thereby utilizing the full cross-sectional area of the culvert.
5. Alternate culvert diameters may be approved per the review of the District Administrator and District Engineer for compliance with minimum design criteria.
6. All pipe sizes can be replaced with a culvert of equivalent cross-sectional area.

EXHIBIT II

SUBLATERAL CULVERTS DETAIL

(see next page for exhibit)

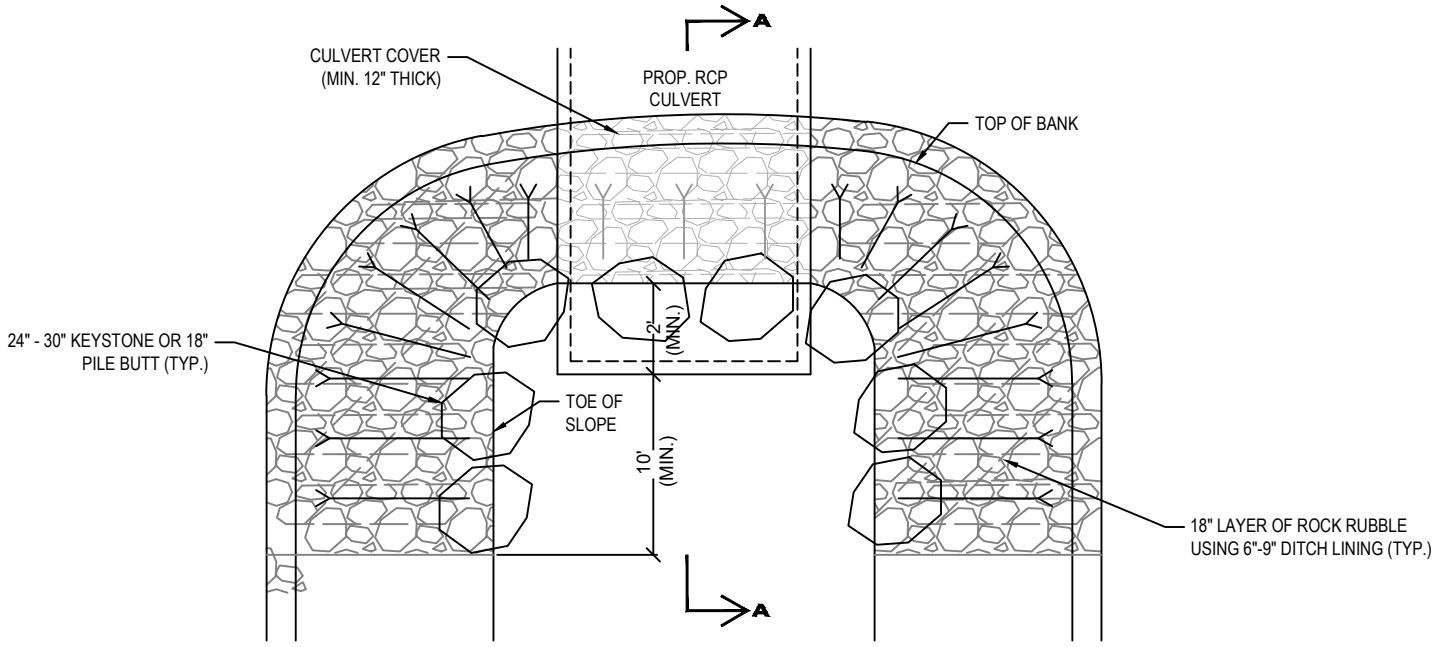

PIPE END DETAIL
PLAN VIEW
N.T.S.

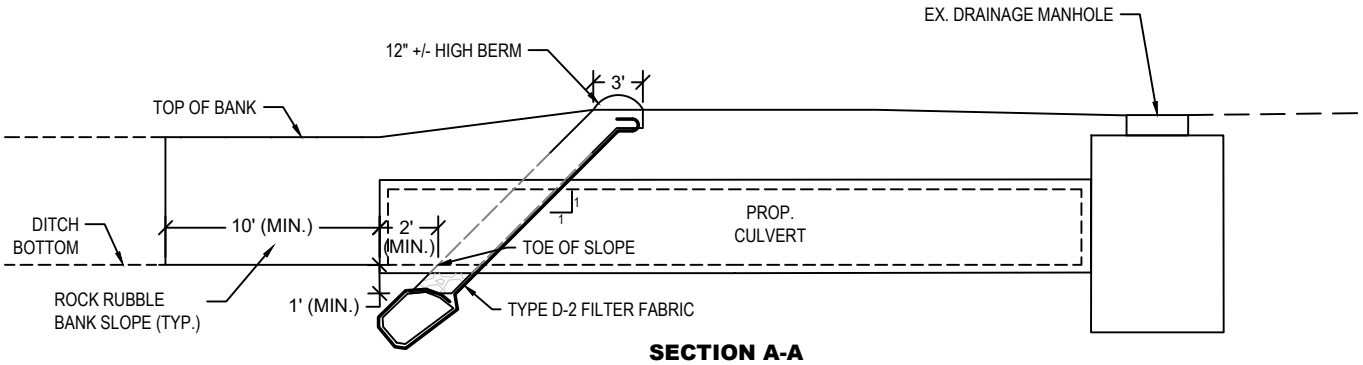

SECTION A-A
N.T.S.

NOTES:

1. RIP-RAP MATERIAL AND INSTALLATION SHALL BE IN ACCORDANCE WITH FDOT INDEX 281 & FDOT SECTION 530.
2. INSTALLATION SHALL BE IN ACCORDANCE WITH SPECIFICATIONS OF IRFWCD " CONNECTION DETAIL" (EXHIBIT III)
3. THE LAST TWO (2) JOINTS OF PIPE ON EACH END SHALL BE RESTRAINED USING 3/8" 316L STAINLESS STEEL STRAPS ON THE INSIDE OF THE PIPE AT THE 12:00, 4:00 & 8:00 POSITIONS. 316L WASHERS MADE FROM THE SAME MATERIAL SHALL BE USED ON THE OUTSIDE OF THE PIPE AND BE THROUGH BOLTED WITH 316L FASTENERS.
4. ALL CULVERTS SHALL HAVE A MINIMUM 12 INCHES OF COVER.
5. ALL CULVERT MATERIAL SHALL BE REINFORCED CONCRETE PIPE IN ACCORDANCE WITH ASTM C76.
6. CULVERT INVERT ELEVATIONS AND PIPE DIAMETER TO BE VERIFIED WITH IRFWCD PRIOR TO CONSTRUCTION.
7. ALL DISTURBED BANK SLOPE SHALL BE ARMORED WITH ROCK RUBBLE.
8. FOR CULVERTS GREATER THAN 100 LF IN LENGTH, LOSS OF WATER STORAGE CAPACITY MUST BE COMPENSATED BY EITHER:
   A. SLOTTED PIPE MATERIAL
   B. AN UNDERDRAIN SYSTEM CONSISTING OF A PERFORATED PIPE (MIN 18") LOCATED PARALLEL TO THE CULVERT. THE PIPE'S INVERT ELEVATION MUST MATCH THE CANAL FLOW LINE. THE PIPE SHALL BE WRAPPED IN FILTER CLOTH AND GRAVEL (MIN 6" THICK). CONNECTIONS FROM THE PIPE TO THE MAIN CULVERT SECTION SHALL BE 200 FT ON CENTER.

INDIAN RIVER FARMS WATER CONTROL DISTRICT

SUBLATERAL CULVERTS DETAIL
EXHIBIT "II"

REV. 10/2026

EXHIBIT III-A

CANAL SIDE SLOPE DETAIL

(see next page for exhibit)

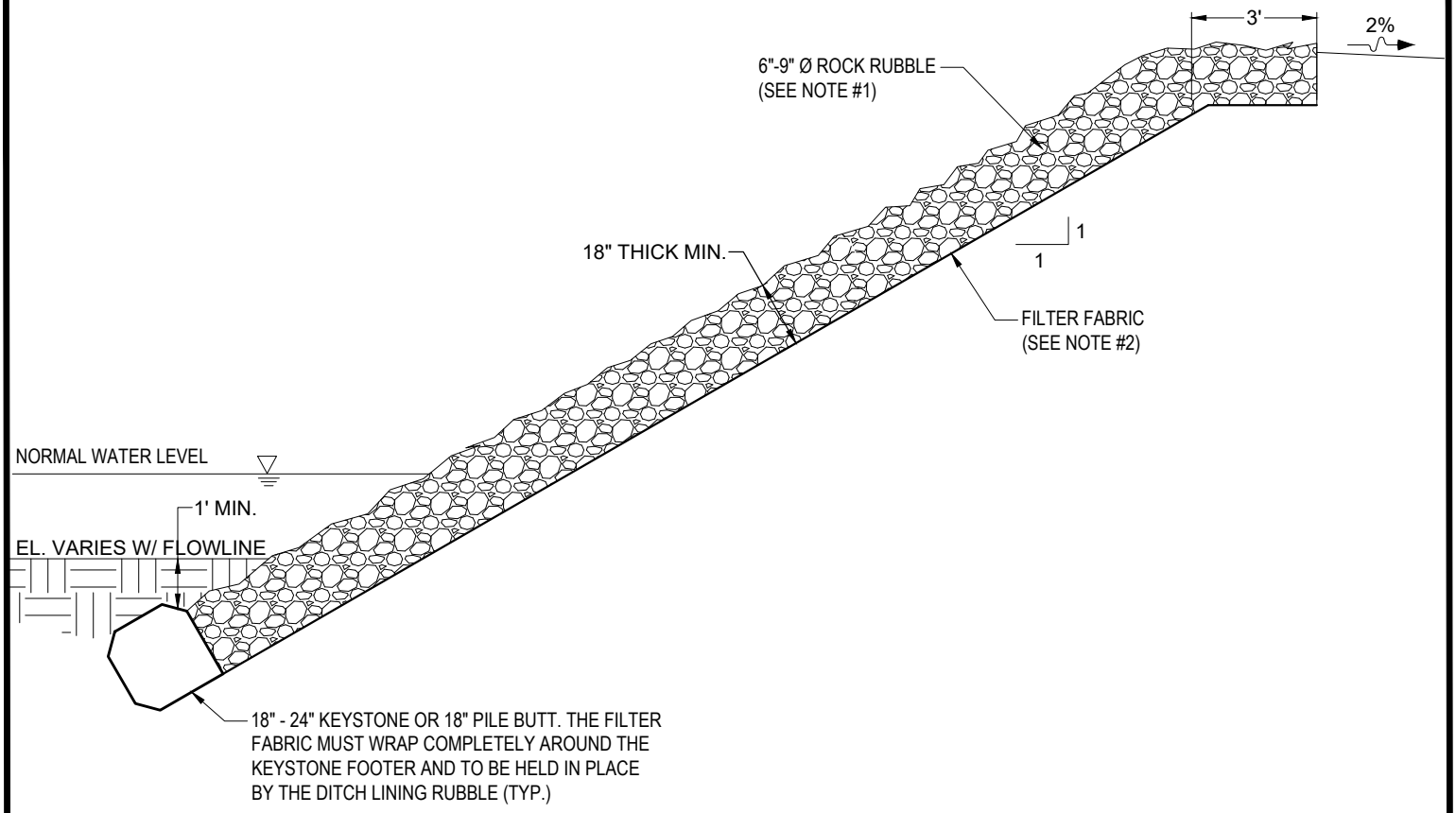

CANAL SIDE SLOPE DETAIL

N.T.S.

***ALL DISTURBED BANK SHALL BE ARMORED PER THIS DETAIL. WIDTH TO BE DETERMINED BY IRFWCD SUPERINTENDENT.**

NOTES:

1. 6"-9" DIAMETER ROCK RUBBLE (BANK SHORE PROTECTION) PER FDOT STANDARD SPECIFICATION SECTION 530-2.1.3. ALTERNATIVELY, FDOT CAP ROCK OR 6"-9" DIAMETER ROCK RUBBLE (DITCH LINING). NO REBAR OR WIRE MAY BE EXPOSED IN ANY MATERIALS USED TO ARMOR THE CANAL.
2. FILTER FABRIC SHALL BE TYPE D-2 GEOTEXTILE FABRIC, IN ACCORDANCE WITH FDOT SPECIFICATION SECTION 530-2.1.1. PREFERRED MATERIAL IS WOVEN FILTER FABRIC. ALTERNATIVELY, MIRAFI FW404 OR EQUAL AASHTO M-288-06. CONSTRUCTION INSTALLATION REQUIREMENTS SHALL BE IN ACCORDANCE WITH FDOT SPECIFICATION SECTION 514.
3. ALL DISTURBED AREAS SHALL BE ARMORED WITH ROCK RUBBLE. WIDTH TO BE FIELD DETERMINED BY IRFWCD SUPERINTENDENT (10' MIN.).
4. GRADE TO BLEND THE DISTURBED AREA WITH THE EXISTING CANAL BANK ON BOTH SIDES.
5. VICINITY, PLAN & ELEVATION DRAWING TO ACCOMPANY PERMIT APPLICATION.
6. TOP OF BANK SHALL BE GRADED AWAY FROM THE CANAL AT A MAXIMUM SLOPE OF 2%.

INDIAN RIVER FARMS WATER CONTROL DISTRICT

CANAL SIDE SLOPE DETAIL

EXHIBIT "III-A"

REV. 10/2026

EXHIBIT III-B

PIPE CONNECTION DETAIL

(see next page for exhibit)

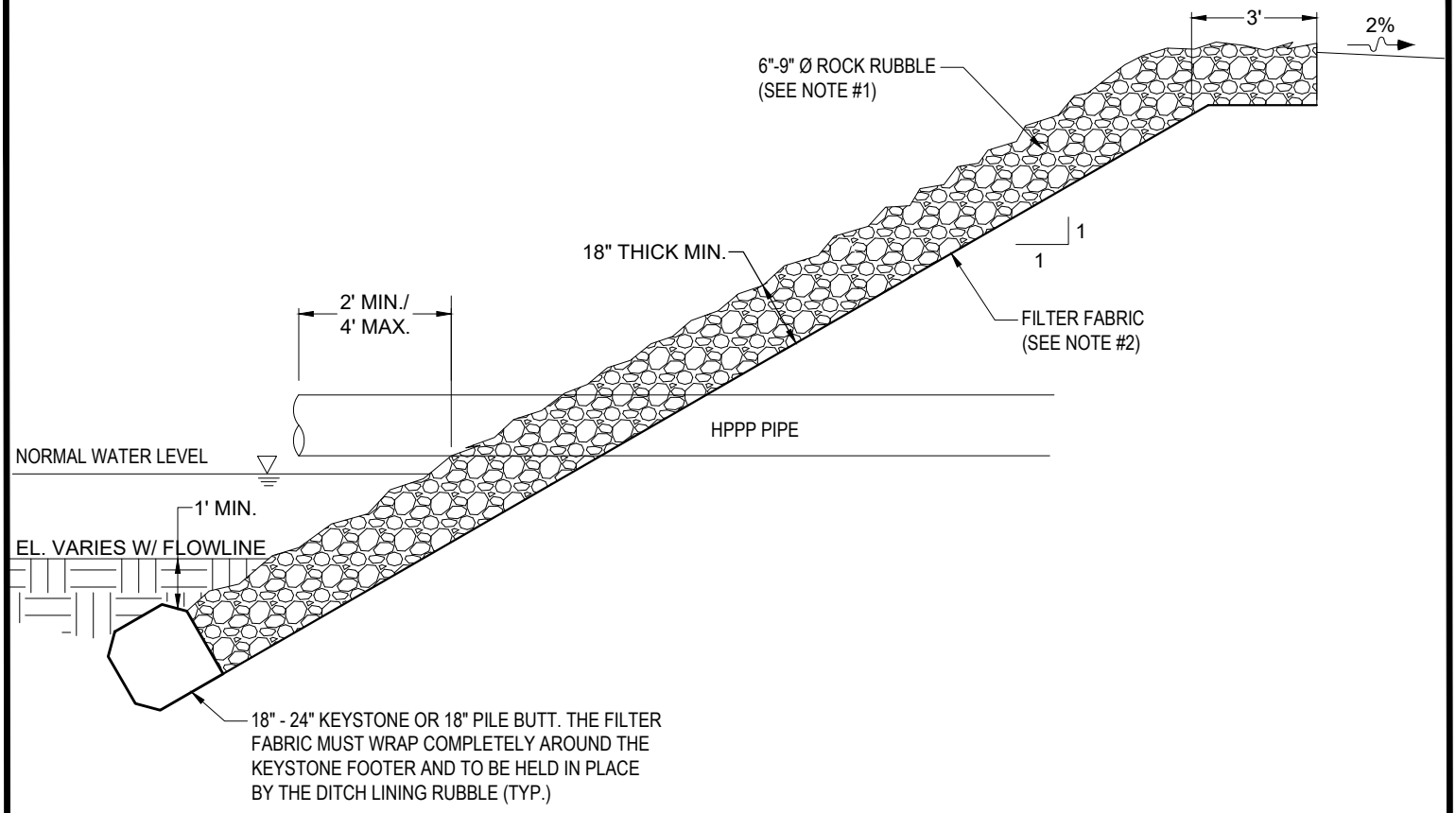

PIPE CONNECTION DETAIL

N.T.S.

***ALL OUTFALL PIPES DISCHARGING INTO THE IRFWCD CANAL SYSTEM SHALL BE CONSTRUCTED PER THIS DETAIL.**

NOTES:

1. 6"-9" DIAMETER ROCK RUBBLE (BANK SHORE PROTECTION) PER FDOT STANDARD SPECIFICATION SECTION 530-2.1.3. ALTERNATIVELY, FDOT CAP ROCK OR 6"-9" DIAMETER ROCK RUBBLE (DITCH LINING). NO REBAR OR WIRE MAY BE EXPOSED IN ANY MATERIALS USED TO ARMOR THE CANAL.
2. FILTER FABRIC SHALL BE TYPE D-2 GEOTEXTILE FABRIC, IN ACCORDANCE WITH FDOT SPECIFICATION SECTION 530-2.1.1. PREFERRED MATERIAL IS WOVEN FILTER FABRIC. ALTERNATIVELY, MIRAFI FW404 OR EQUAL AASHTO M-288-06. CONSTRUCTION INSTALLATION REQUIREMENTS SHALL BE IN ACCORDANCE WITH FDOT SPECIFICATION SECTION 514.
3. ALL DISTURBED AREAS SHALL BE ARMORED WITH ROCK RUBBLE. WIDTH TO BE FIELD DETERMINED BY IRFWCD SUPERINTENDENT (10' MIN.).
4. GRADE TO BLEND THE DISTURBED AREA WITH THE EXISTING CANAL BANK ON BOTH SIDES.
5. VICINITY, PLAN & ELEVATION DRAWING TO ACCOMPANY PERMIT APPLICATION.
6. ALL OUTFALL PIPE MATERIAL SHALL BE ADS HP STORM OR EQUAL HIGH-PERFORMANCE POLYPOPYLENE (HPPP) PIPE.
7. TOP OF BANK SHALL BE GRADED AWAY FROM THE CANAL AT A MAXIMUM SLOPE OF 2%.

INDIAN RIVER FARMS WATER CONTROL DISTRICT

PIPE CONNECTION DETAIL

EXHIBIT "III-B"

REV. 10/2026

EXHIBIT III-E1

ENTRANCE CULVERT

(see next page for exhibit)

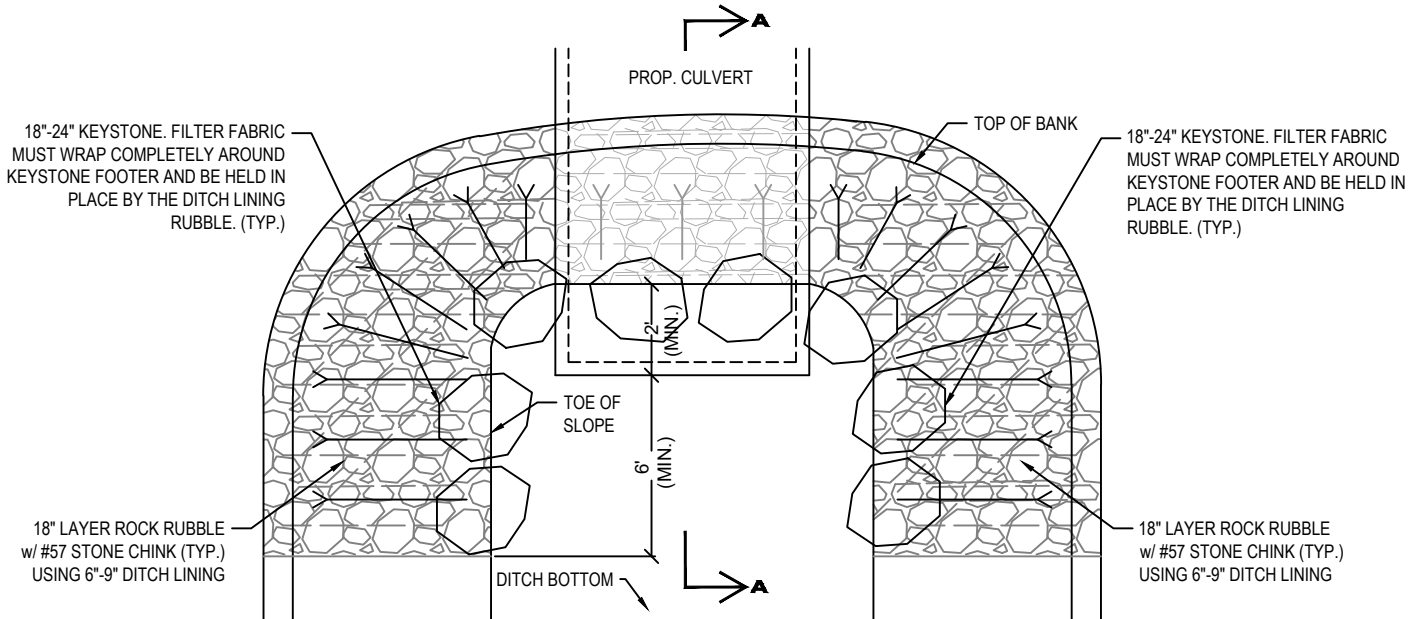

ENTRANCE CULVERT PIPE END
DETAIL PLAN VIEW
(TYP. BOTH ENDS)
N.T.S.

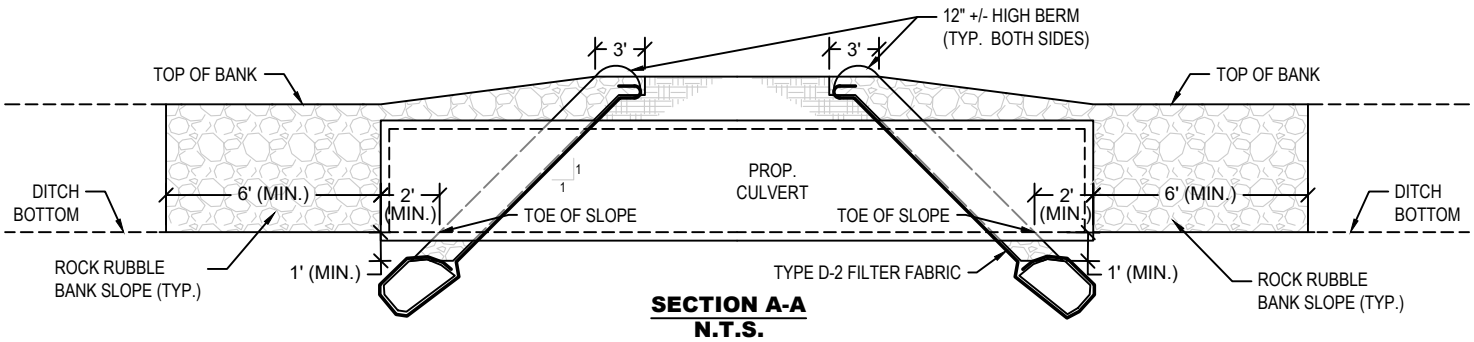

SECTION A-A
N.T.S.

NOTES:

1. RIP-RAP MATERIAL AND INSTALLATION SHALL BE IN ACCORDANCE WITH FDOT INDEX 281 & FDOT SECTION 530.
2. INSTALLATION SHALL BE IN ACCORDANCE WITH SPECIFICATIONS OF IRFWCD " CONNECTION DETAIL" (EXHIBIT III)
3. THE LAST TWO (2) JOINTS OF PIPE ON EACH END SHALL BE RESTRAINED USING 3/8" 316L STAINLESS STEEL STRAPS ON THE INSIDE OF THE PIPE AT THE 12:00, 4:00 & 8:00 POSITIONS. 316L WASHERS MADE FROM THE SAME MATERIAL SHALL BE USED ON THE OUTSIDE OF THE PIPE AND BE THROUGH BOLTED WITH 316L FASTENERS.
4. ALL CULVERTS SHALL HAVE A MINIMUM 12 INCHES OF COVER.
5. ALL CULVERT MATERIAL SHALL BE REINFORCED CONCRETE PIPE IN ACCORDANCE WITH ASTM C76.
6. CULVERT INVERT ELEVATIONS AND PIPE DIAMETER TO BE VERIFIED WITH IRFWCD PRIOR TO CONSTRUCTION.
7. ALL DISTURBED BANK SLOPE SHALL BE ARMORED WITH ROCK RUBBLE.

INDIAN RIVER FARMS WATER CONTROL DISTRICT

ENTRANCE CULVERT
EXHIBIT "III-E1"

REV. 10/2026

EXHIBIT IV

RESTORATION OF SUBLATERAL BERMS

(see next page for exhibit)

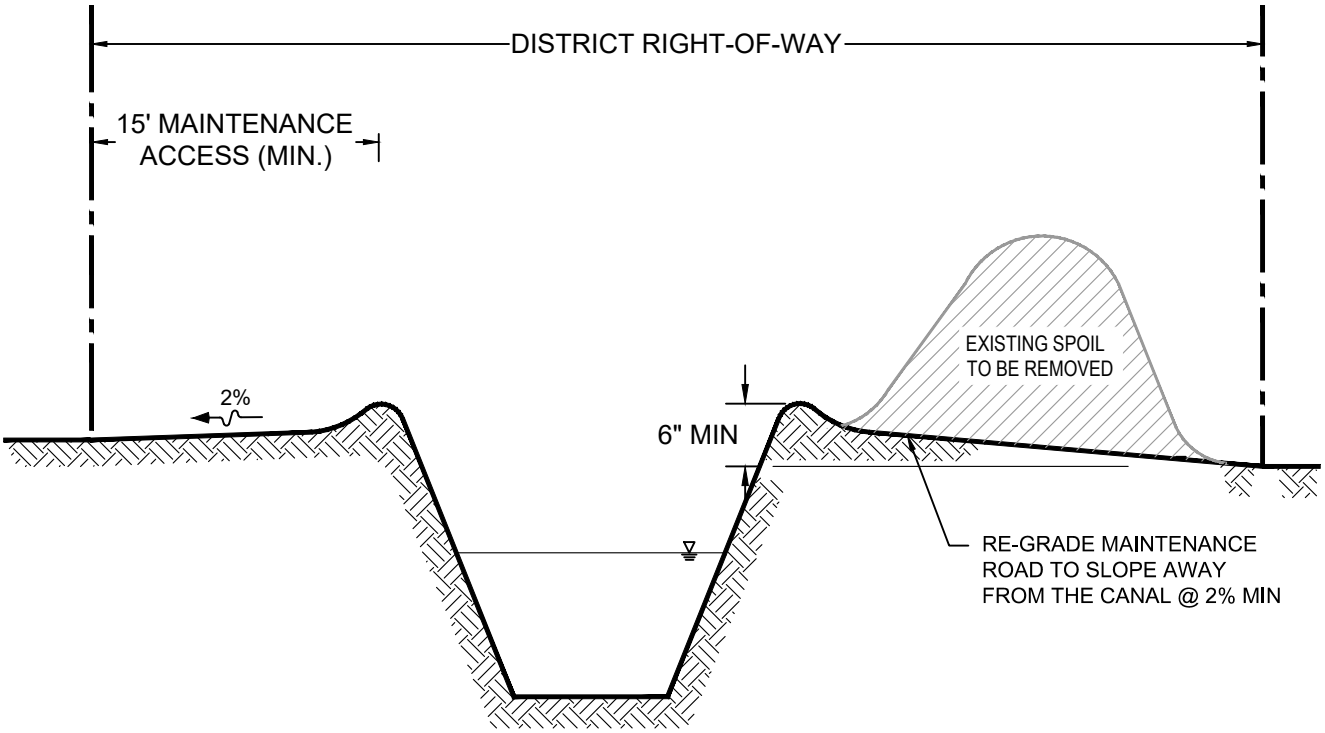

CANAL CROSS SECTION

N.T.S.

NOTES:

1. ALL DISTURBED AREAS SHALL BE GRASSED IN KIND WITHIN 14 DAYS OF THE COMPLETED ACTIVITY.
2. GRADE TO BLEND THE DISTURBED AREA WITH THE AREAS ON BOTH SIDES.
3. VICINITY, PLAN, AND ELEVATION DRAWING TO ACCOMPANY PERMIT APPLICATION.
4. MAINTENANCE ACCESS MUST BE CLEAR OF OBSTRUCTIONS TO HEAVY EQUIPMENT. INCLUDING, BUT NOT LIMITED TO SIGNAGE, MAILBOXES, CURBING, AND GUARDRAIL.

INDIAN RIVER FARMS WATER CONTROL DISTRICT

RESTORATION OF SUBLATERAL BERMS
EXHIBIT "IV"

REV. 10/2026

EXHIBIT V

OVERHEAD UTILITY CROSSING

(see next page for exhibit)

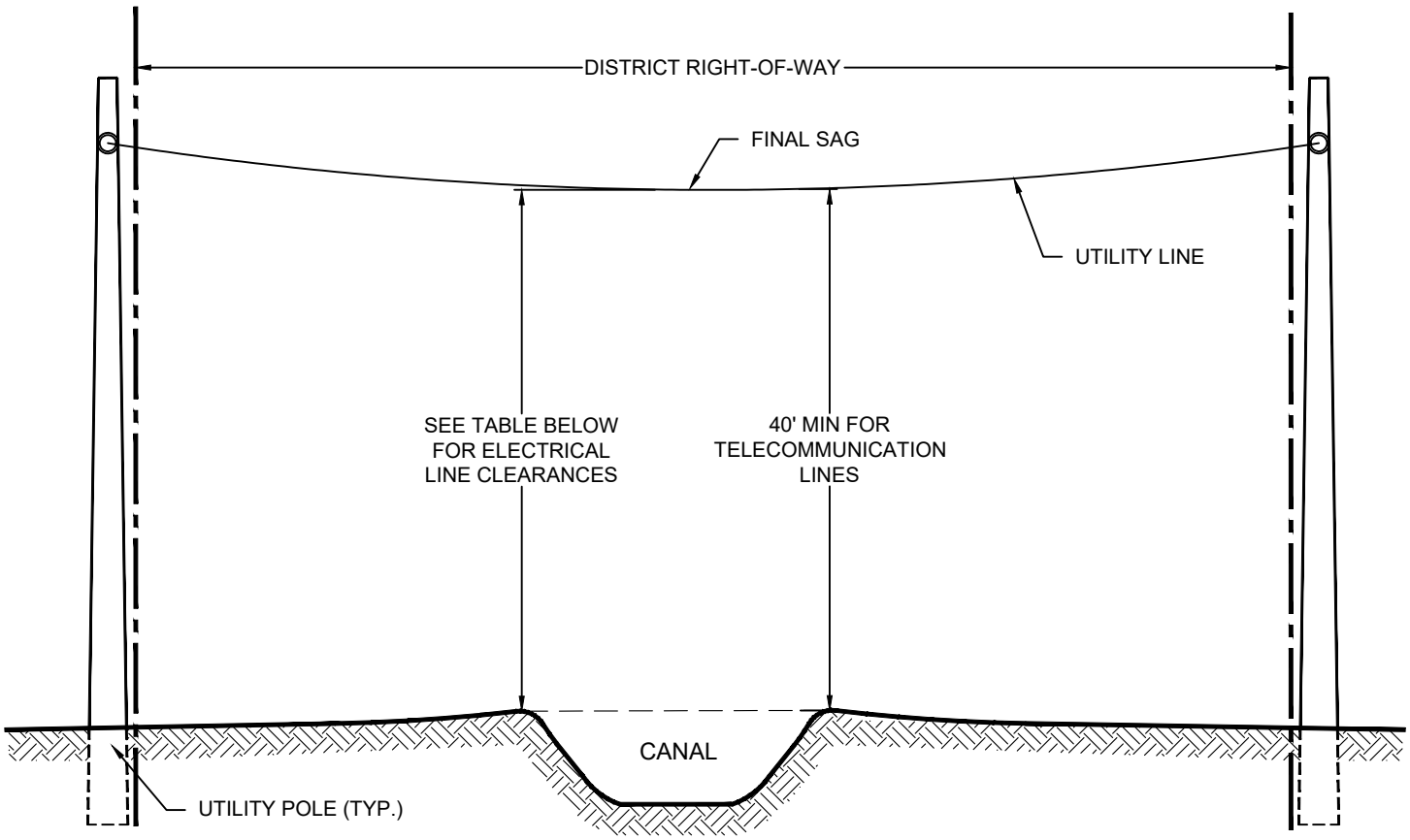

UTILITY CLEARANCE DETAIL

N.T.S.

TABLE OF ELECTRICAL VERTICAL CLEARANCES

LOCATION	VOLTAGE OF CROSSING CIRCUIT						
	PHASE TO PHASE	GUYS (GROUNDED)	69kV	115kV	138kV	240kV	500kV
	PHASE TO GROUND		50kV & UNDER	67kV	80kV	138kV	289kV
MINIMUM VERTICAL CLEARANCE FROM HIGHEST ELEVATION OF THE CANAL MAINTENANCE ROAD		40'-0"	45'-0"	45'-8"	46'-2"	48'-0"	54'-0"

NOTES:

1. OVERHEAD LINES SHALL NOT BE PERMITTED TO CROSS DIRECTLY OVER DISTRICT WATER CONTROL STRUCTURES.
2. OVERHEAD COMMUNICATIONS AND SIMILAR UTILITY CROSSINGS OVER DISTRICT WATER BODIES ARE DISCOURAGED IN FAVOR OF DIRECTIONAL DRILL INSTALLATIONS AND WILL ONLY BE PERMITTED AS A VARIANCE GRANTED BY THE BOARD.
3. POLES SHALL NOT BE LOCATED WITHIN CANAL RIGHT-OF-WAY.
4. CLEARANCES SHOWN SHALL BE WITH WIRES AT MAXIMUM DESIGN TEMPERATURE AND FINAL SAG.
5. VICINITY, PLAN & ELEVATION DRAWINGS TO ACCOMPANY PERMIT APPLICATION.

INDIAN RIVER FARMS WATER CONTROL DISTRICT

OVERHEAD UTILITY CROSSING

EXHIBIT "V"

REV. 10/2026

EXHIBIT VI

UNDER-CANAL UTILITY CROSSING

(see next page for exhibit)

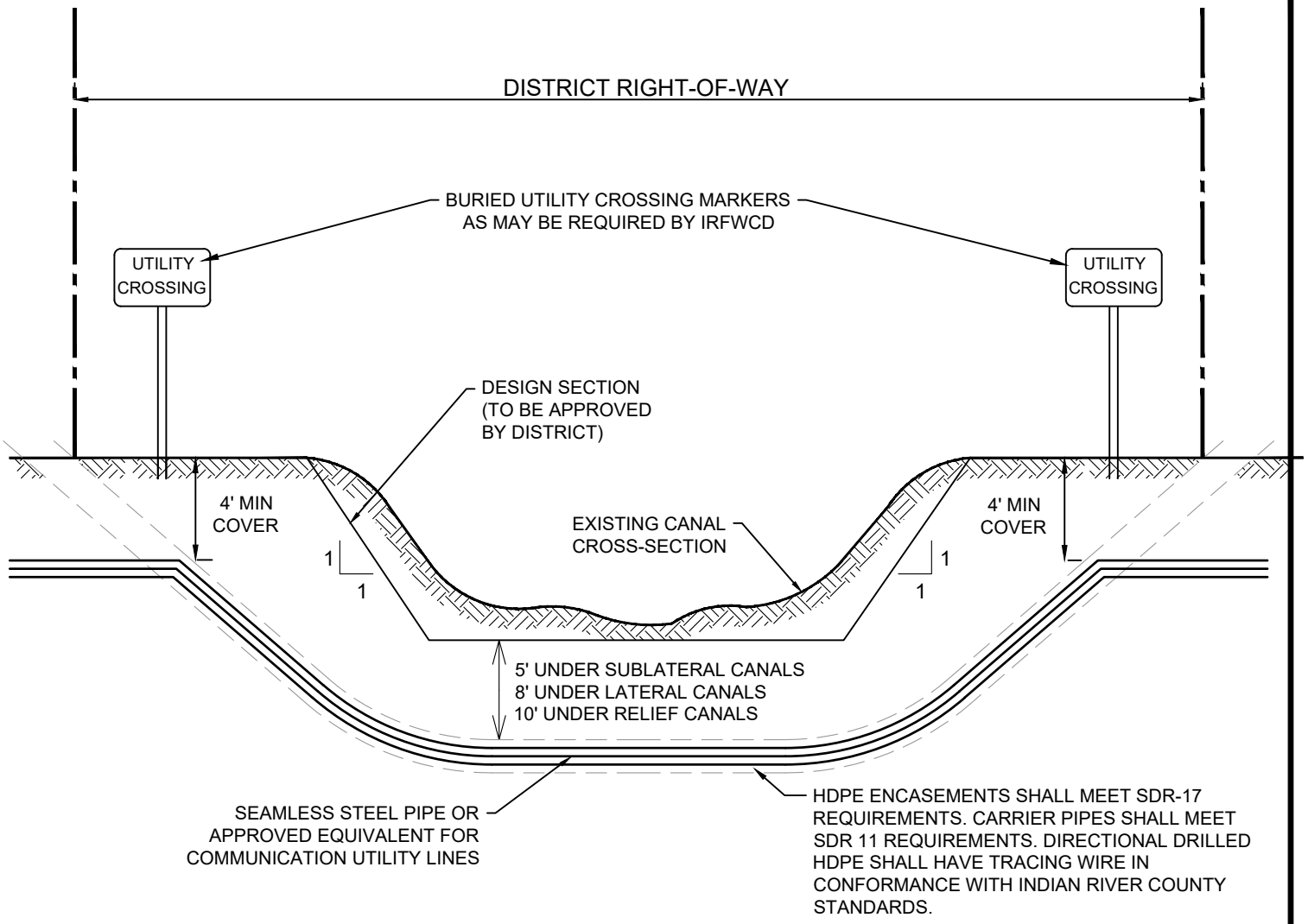

UNDER-CANAL UTILITY CLEARANCE DETAIL

N.T.S.

NOTES:

1. OPEN CUT INSTALLATIONS OF UNDER CANAL CROSSINGS ARE PROHIBITED.
2. COVER SHALL BE MEASURED FROM THE TOP OF THE UTILITY LINE'S PROTECTIVE ENCASEMENT TO THE EXISTING CANAL BOTTOM, ORIGINAL DESIGN SECTION OR, IF KNOWN, ULTIMATE SECTION, WHICHEVER PRODUCES THE LOWEST INSTALLATION.
3. VICINITY, PLAN & ELEVATION DRAWING TO ACCOMPANY PERMIT APPLICATION.
4. SEPARATION DISTANCE SHALL BE MEASURED TO THE TOP OF THE UTILITY PIPE OR TOP OF ENCASEMENT, WHICHEVER IS HIGHER.

INDIAN RIVER FARMS WATER CONTROL DISTRICT

UNDER-CANAL UTILITY CROSSING

EXHIBIT "VI"

REV. 10/2026

EXHIBIT VII

DISTRICT MAP

(see next page for exhibit)

EXHIBIT VII - DISTRICT MAP

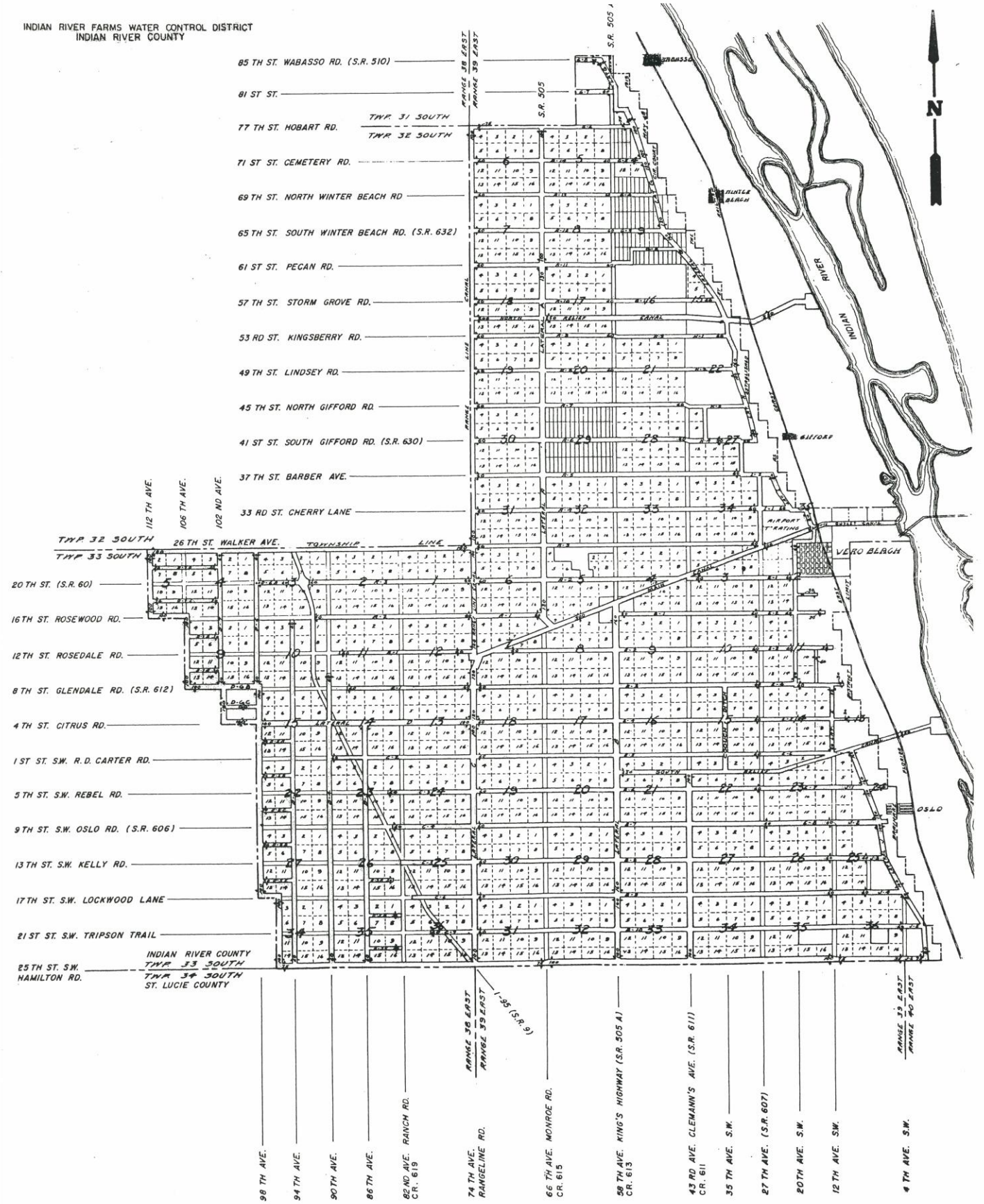

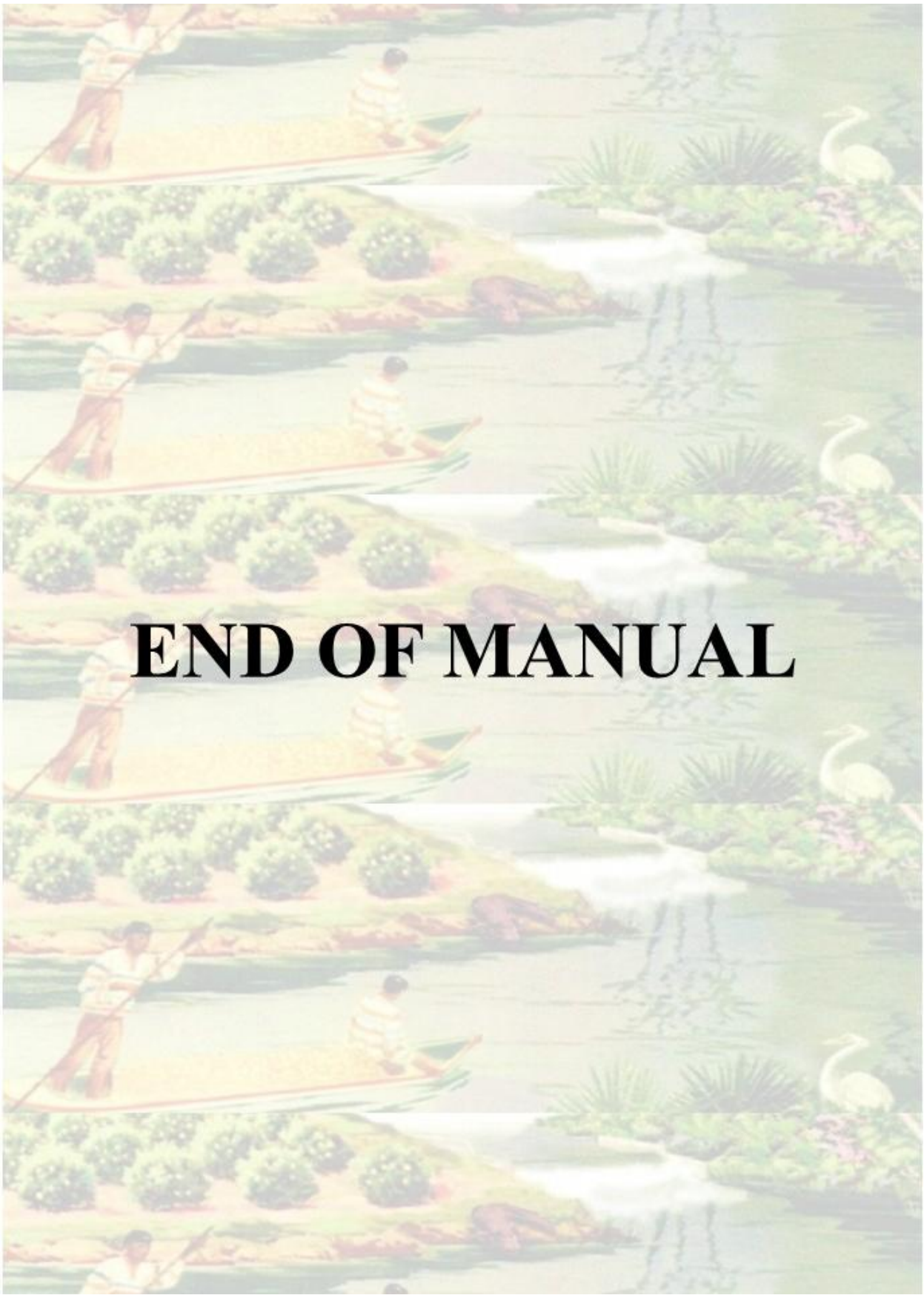
END OF MANUAL