KUKJE BL20A Branson Loader

Parts Catalogue

BRANSON TRACTOR

CONTENTS

GROUP NO	GROUP NAME	PAGE
001	BOOM & BUCKET	3
007	MOUNTING KIT	5
010	HYDRAULIC PARTS	7
012-1	CYLINDER (BOOM)	9
012-2	CYLINDER (BUCKET)	11
015	ATTACHMENT	13
017	BUCKET	15
018	DECAL AND MANUAL	17
019	CONTROL VALVE SPARE PART	19

FIG 001 BL20A	BOOM & BUCKET	Year/Month 2020/02

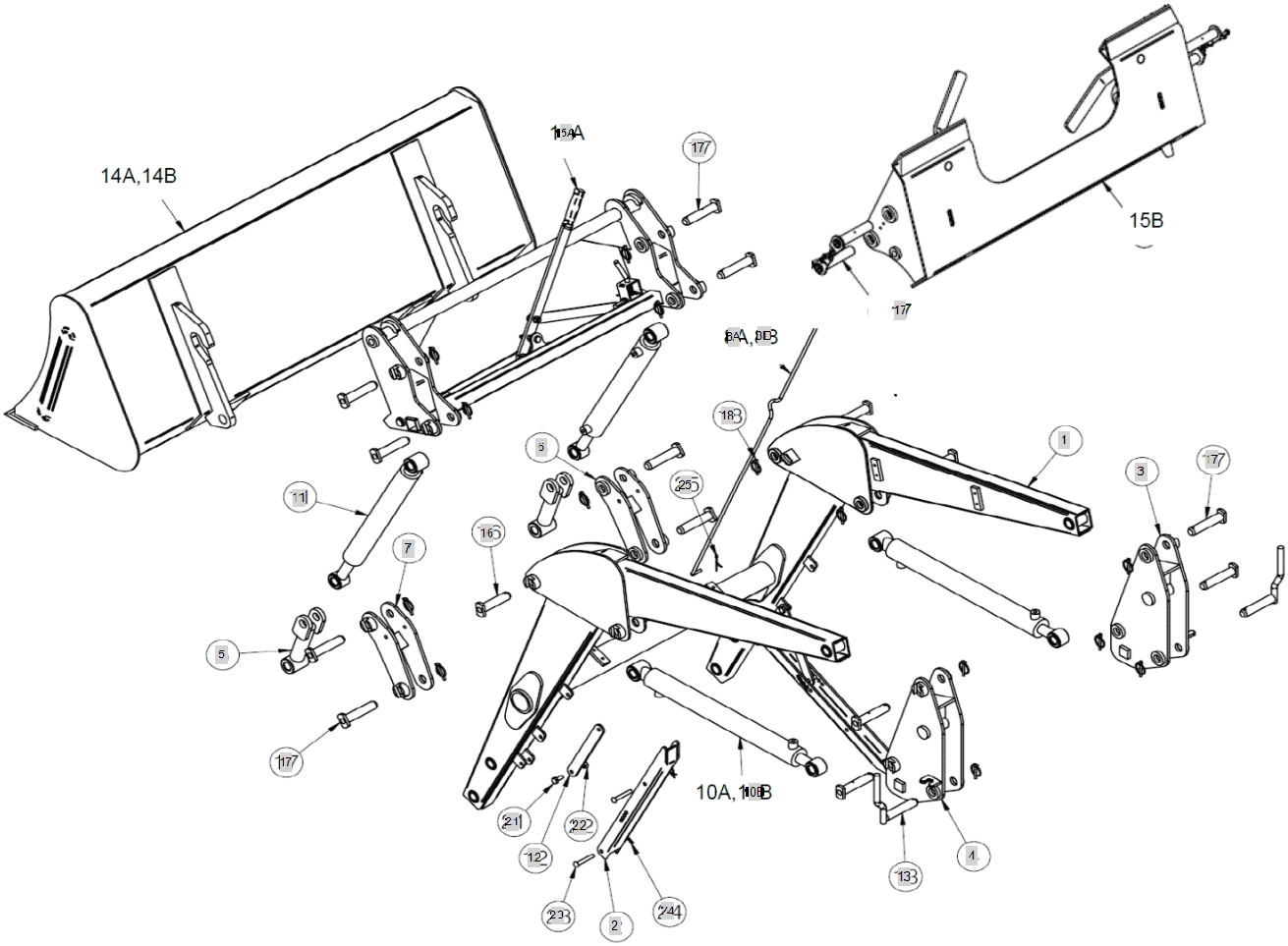

FIG 001 BL20A	BOOM & BUCKET	Year/Month 2020/02

KeyNo.	Part Number	Part Name	Quantity	Other
1	25401-0000	BOOM	1	
2	2540A-2510	STAND	2	
3	2540A-3100	COLUMN-RH	1	
4	2540A-3200	COLUMN-LH	1	
5	2540A-4100	ROD-BUCKET	2	
6	2540A-4300	LINK BUCKET RH	1	
7	2540A-4400	LINK BUCKET LH	1	
8A	2540A-4510	INDICATOR	1	
8B	2540A-451A	INDICATOR	1	
10B	ALN191-09-8000	CYLINDER-BOOM	2	
11	2540-09-9000	CYLINDER-BUCKET	2	
12	ALK28-09-9200	BRACKET-STAND	2	
13	ALN47-03-910A	PIN-COLUMN	2	
15A	ALK28-02-1000	QUICK ATTACHMENT (BL10/BL20)	1	
16	ALK28-98-1120	PIN-I (ø25×112L)(=WA00000930A)	4	
17	ALK28-98-1160	PIN(=WA00000931A)	12	
18	AL20-98-9990	LINK PIN	18	
21	BH1055150Z	BOLT	2	
22	NL10150Z	LOCK NUT	2	
23	PX10065	LOADER BRACKET PINS	4	
24	PR03025	R-PIN (PR30045)	4	
25	PD03025	SPLIT PIN	1	

FIG 007 BL20A	MOUNTING KIT	Year/Month 2020/02

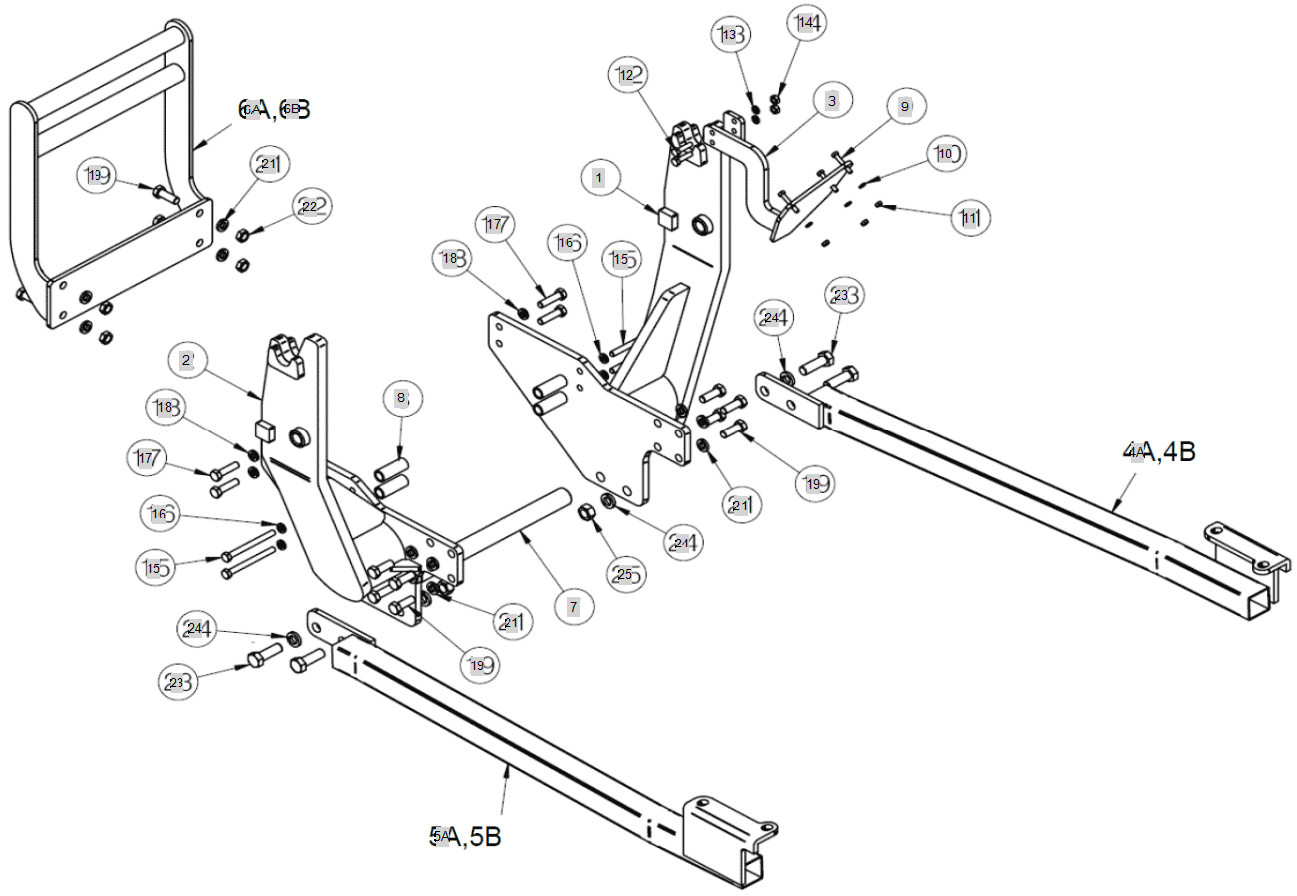

FIG 007 BL20A	MOUNTING KIT	Year/Month 2020/02

KeyNo.	Part Number	Part Name	Quantity	Other
1	LK40B-1100	SUB FRAME	1	
2	LK40B-1200	SUB FRAME(I)	1	
3	LK28A-1800	C/V BRACKET	1	
4A	LK40A-3100	BACK AXLE RH	1	
5A	LK40A-3200	BACK AXLE LH	1	
6A	LK28A-4100	BUMPER	1	
6B	LK28A-410C	GRILL GUARD (SHORT)	1	
7	C30-09-6100	CROSS BAR	1	
8	ALK28-09-416A	BUSHING	4	
9	BH08AA125X	BOLT 8 X 50	3	
10	WS08M	SPRING WASHER	3	
11	NH08125Z	NUT	3	
12	BH1086150Z	BOLT	2	
13	WS10M	SPRING WASHER	2	
14	NH10150Z	NUT	2	
15	BH12Q7175Z	BOLT	4	
16	WS12M	SPRING WASHER	4	
17	BH14B7200Z	BOLT 14 X 55	4	
18	WS14M	SPRING WASHER	4	
19	BH1699200Z	BOLT 16 X 45	12	
21	WS16M	SPRING WASHER	12	
22	NH16200Z	NUT	4	
23	BH20CA250Z	BOLT	4	
24	WS20M	SPRING WASHER	4	
25	NH20250Z	NUT	2	

FIG 010 BL20A	HYDRAULIC PARTS	Year/Month 2020/02

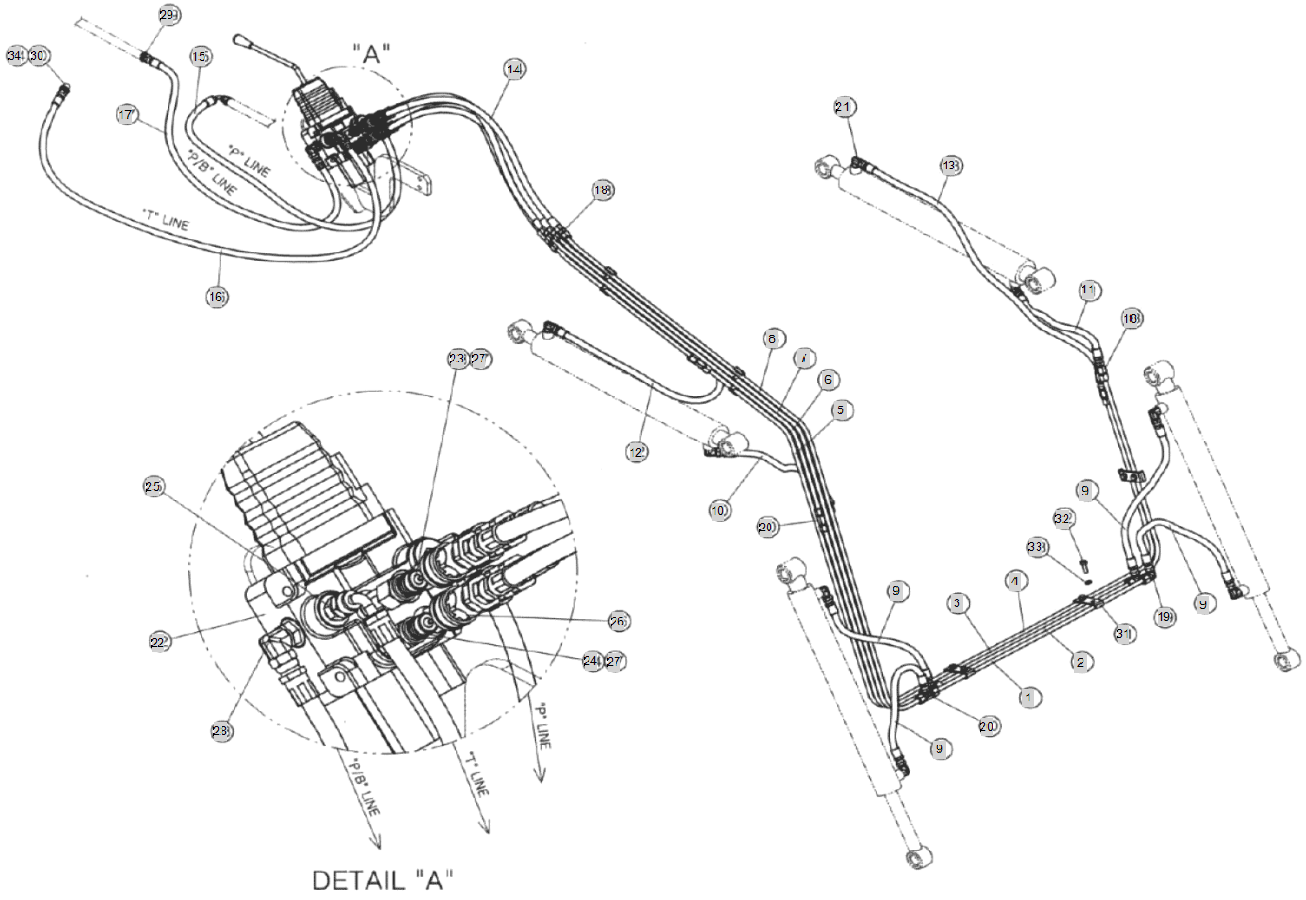

FIG 010 BL20A	HYDRAULIC PARTS	Year/Month 2020/02

KeyNo.	Part Number	Part Name	Quantity	Other
1	ALKN28-07-1100	PIPE	1	
2	ALKN28-07-1200	PIPE	1	
3	ALKN28-07-1300	PIPE	1	
4	ALKN28-07-1400	PIPE	1	
5	ALKN28-07-1500	PIPE	1	
6	ALKN28-07-1600	PIPE	1	
7	ALKN28-07-1700	PIPE	1	
8	ALKN28-07-1800	PIPE	1	
9	ALKN28-08-1100	HOSE ASS'Y	4	
10	5PG1-0100	Hose Assy	1	
11	5PG1-0030	HOSE ASSY	1	
12	5PG1-0010	HOSE ASSY	1	
13	5PG1-0040	HOSE ASSY	1	
14	3P81-0840	HOSE ASSY (3/8 X 700L) 28" long	4	
15	3P81-0930	HOSE ASSY (P LINE)	1	
16	3P81-0940	HOSE ASSY (T LINE)	1	
17	3P81-0920	HOSE ASSY (P/B LINE)	1	
18	ALK28-07-9800	NIPPLE	6	
19	ALK28-07-9600	ELBOW	2	
20	ALK28-07-9900	Tee NIPPLE	4	
21	ALK28-07-9500	ELBOW NIPPLE	8	
22	ALK28-09-800A	SUB TO ->ALK28-09-800B CONTROL VALVE	1	
23	ALK28-07-791A	ADAPTER	2	
24	ALK28-07-792A	ADAPTER	2	
25	7860-07-7080	SUB TO-> OR88F5OX-S	1	
26	ALK28-07-7400	SUB TO-> 800501004	4	
27	ALK28-07-7300	SUB TO-> 800501005	4	
28	M7040-07-7050	ADAPTER	2	
29	BL10A-07-7010	NIPPLE	1	
30	BL10A-07-7020	NIPPLE	1	
31	ALK28-07-9200	COVER	5	
32	BH0855125X	BOLT	10	
33	WS08M	SPRING WASHER	10	
34	WC17K	WASHER(COPPER)	1	

FIG 012-1 BL20A	CYLINDER (BOOM)	Year/Month 2020/02

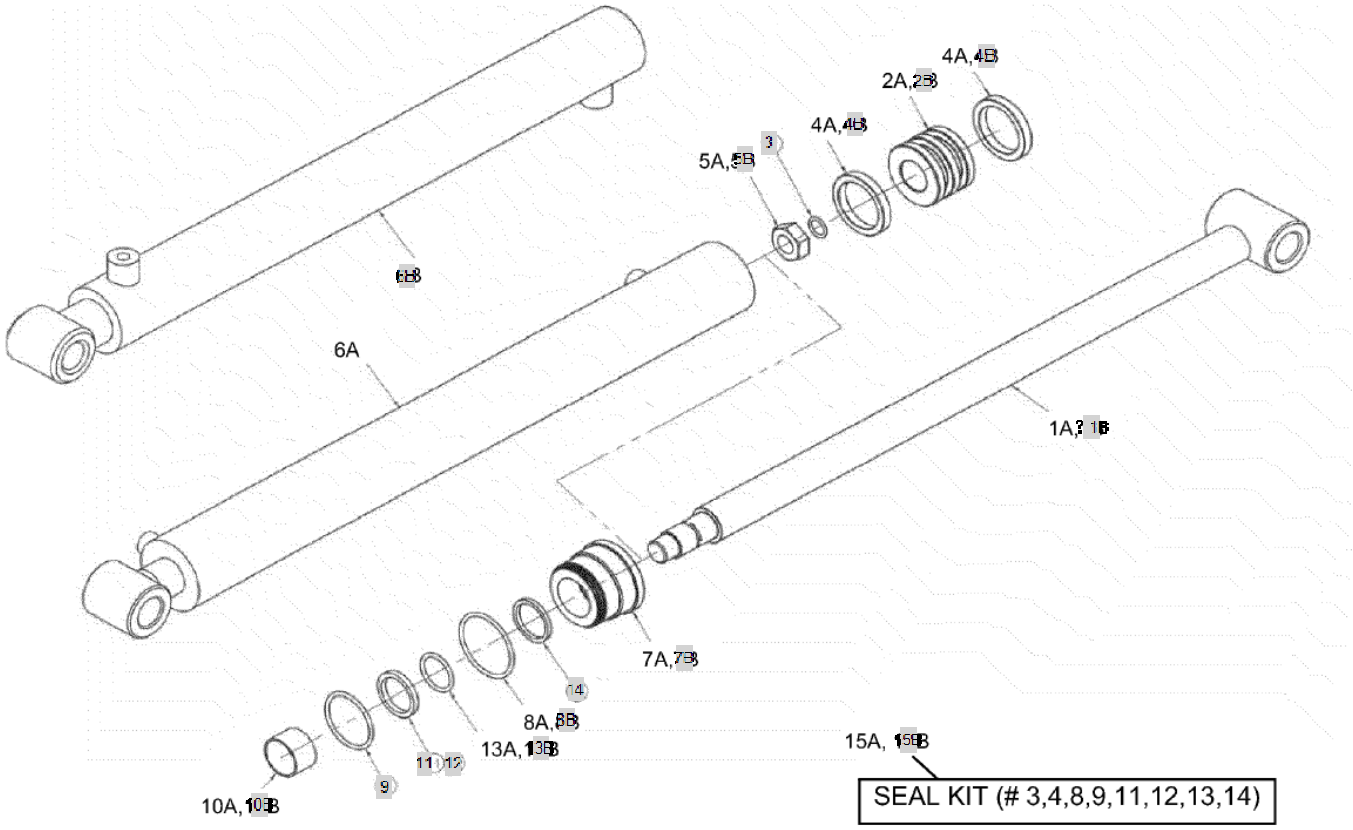

FIG 012-1 BL20A	CYLINDER (BOOM)	Year/Month 2020/02

KeyNo.	Part Number	Part Name	Quantity	Other
? 1B	ALN191-05-2110		1	
2B	ALN191-05-2120	ROD	1	
3	1BP18	O-ring	1	
4B	ODI55X40X10	U-PACKING	2	
5B	ALN191-05-2150	NUT	1	
6B	2540-05-2210	BOOM TUBE	1	
7B	ALN191-05-2220	COVER ROD	1	
8B	1BG55	O-RING, BOOM CYLINDER	1	
9	1BP30	O-RING	1	
10B	ALN191-05-2250	SUB TO-> DU3020	1	
11	ISI30X40X6	U-PACKING (ALK28-05-1070)	1	
12	BRT330X40X2	BACK-UP RiNG	1	
13B	1BP50	O-RING, BUCKET CYLINDER (ALK28-05-1040)	1	
14	LBI30X38X5/6.5	DUST SEAL (ALK28-05-1110)	1	
15B	SEAL5530	SEAL KIT 5530	1	

FIG 012-2 BL20A	CYLINDER (BUCKET)	Year/Month 2020/02

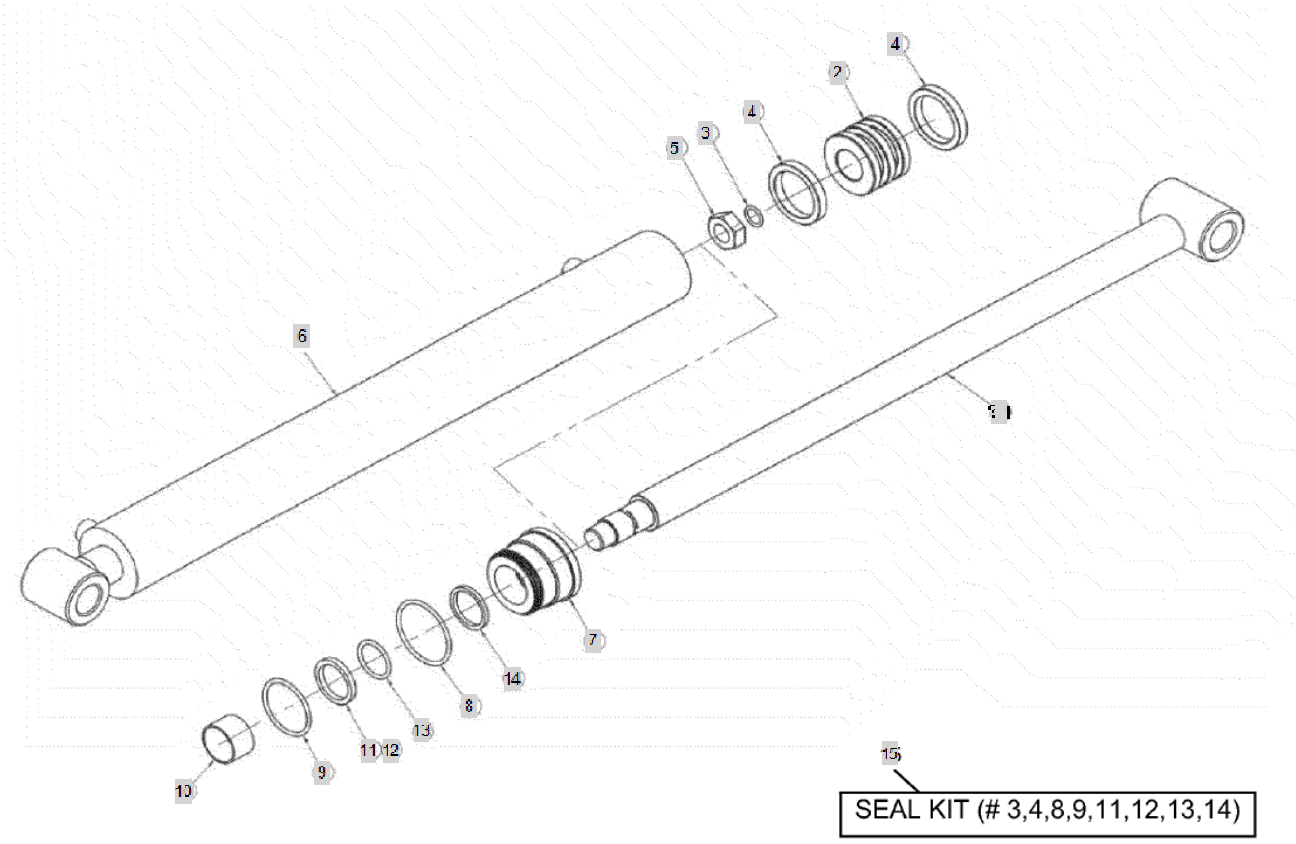

FIG 012-2 BL20A	CYLINDER (BUCKET)	Year/Month 2020/02

KeyNo.	Part Number	Part Name	Quantity	Other
? 1	2540-05-1020	ROD, BUCKET CYLINDER	1	
2	PI5030-W	PISTON	1	
3	1BP18	O-ring	1	
4	ODI50X35X9	U-PACKING (ALK28-05-1130)	2	
5	2540-05-1150	NUT, BUCKET CYLINDER	1	
6	2540-05-1210	TUBE, BUCKET CYLINDER	1	
7	2540-05-2220	BOOM COVER ROD	1	
8	1BP50	O-RING, BUCKET CYLINDER (ALK28-05-1040)	1	
9	1BP30	O-RING	1	
10	DU3020	DU BUSH	1	
11	ISI30X40X6	U-PACKING (ALK28-05-1070)	1	
12	BRT330X40X2	BACK-UP RiNG	1	
13	1BP20	O-RING,BUCKET/BOOM CYLINDER	1	
14	LBI30X38X5/6.5	DUST SEAL (ALK28-05-1110)	1	
15	SEAL5030	SEAL KIT 5030	1	

FIG 015 BL20A	ATTACHMENT	Year/Month 2020/02

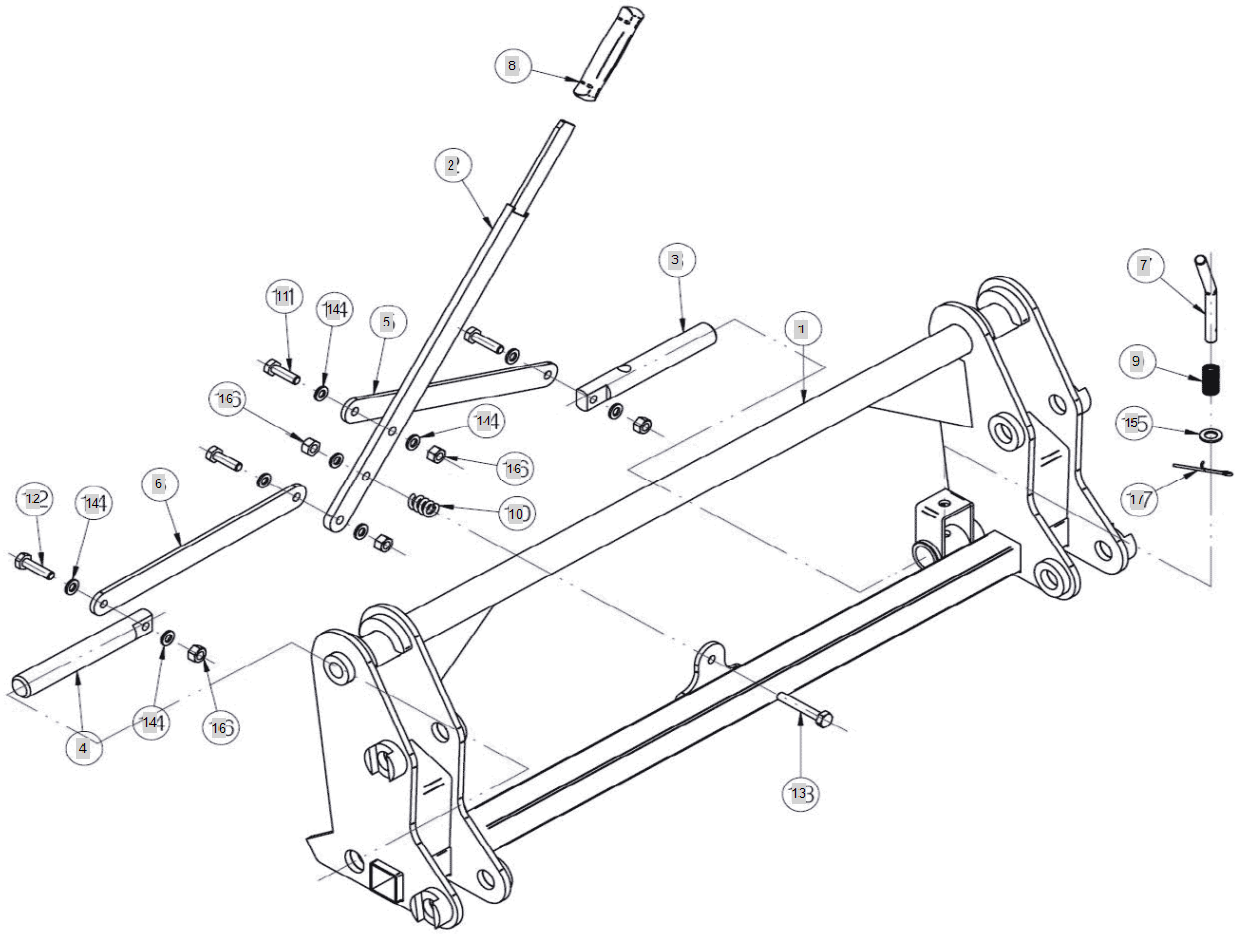

FIG 015 BL20A	ATTACHMENT	Year/Month 2020/02

KeyNo.	Part Number	Part Name	Quantity	Other
1	ALK28-02-1100	FRAME ATT.	1	
2	ALK28-02-1500	LEVER	1	
3	ALK28-02-1010	PIN RH.	1	
4	ALK28-02-1020	PIN LH.	1	
5	ALK28-02-1030	LINK HI.	1	
6	ALK28-02-1040	LINK LWR.	1	
7	ALK28-08-1040	PIN-LEVER	1	
8	ALK28-04-2010	KNOB	1	
9	ALK28-04-0010	SPRING	1	
10	ACH50-11-0040	SPRING	1	
11	BH1075150Z	BOLT	2	
12	BH1086150Z	BOLT	2	
13	BH10D6150Z	BOLT	1	
14	WP10M	PLAIN WASHER	9	
15	WP10M	PLAIN WASHER	1	
16	NL10150Z	LOCK NUT	5	
17	PD03025	SPLIT PIN	1	

FIG 017 BL20A	BUCKET	Year/Month 2020/02

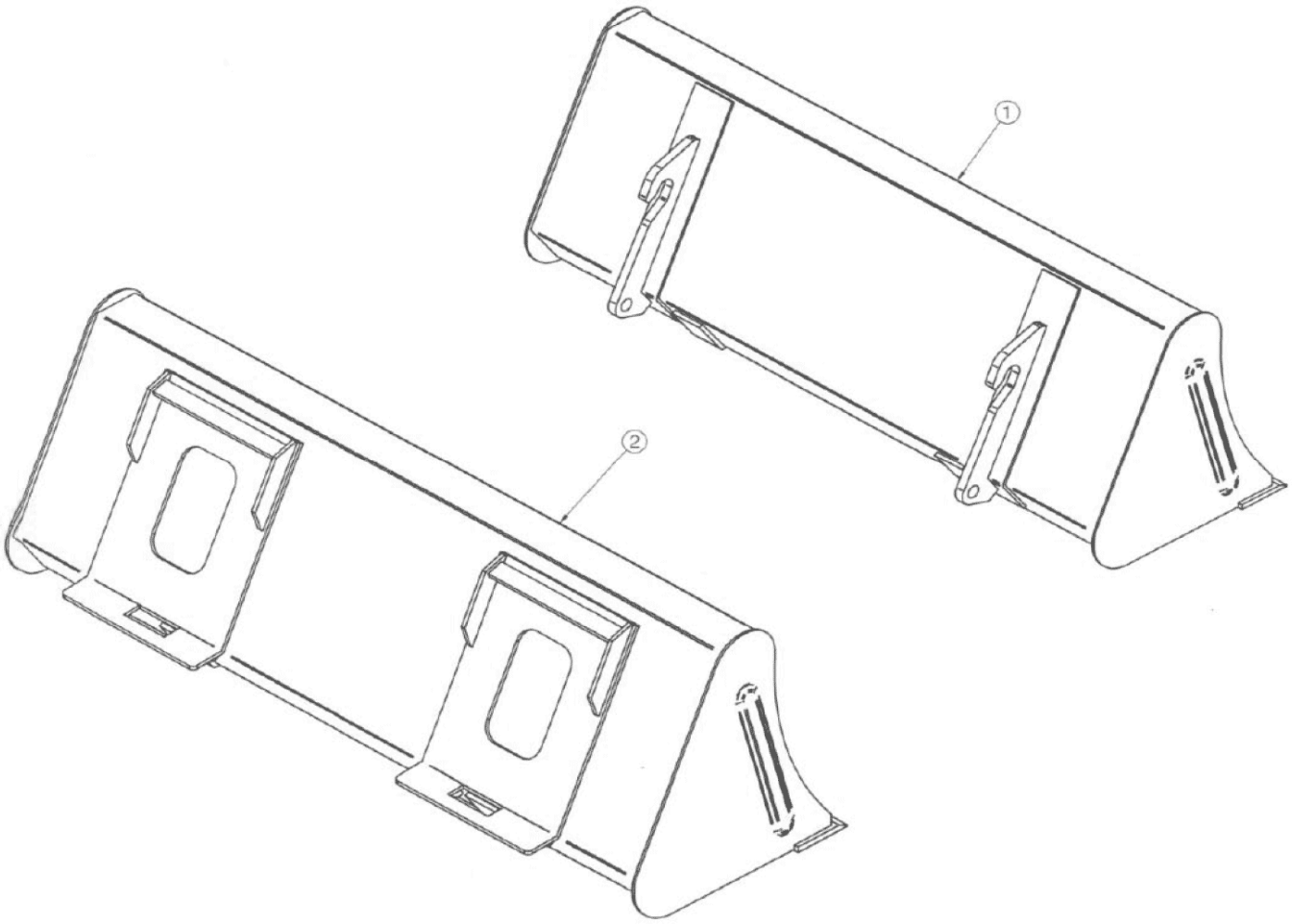

FIG 017 BL20A	BUCKET	Year/Month 2020/02

KeyNo.	Part Number	Part Name	Quantity	Other
1B	BT40A	LOADER BUCKET (BL20,BL20A)	1	

FIG 018 BL20A	DECAL AND MANUAL	Year/Month 2020/02

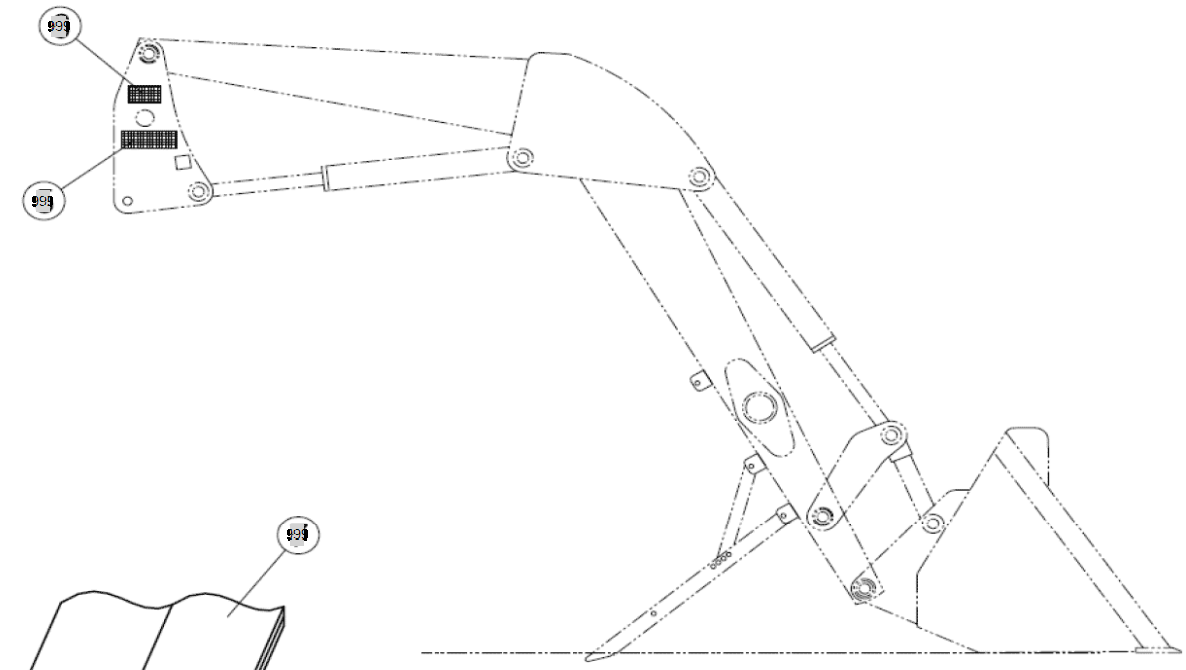

RH.

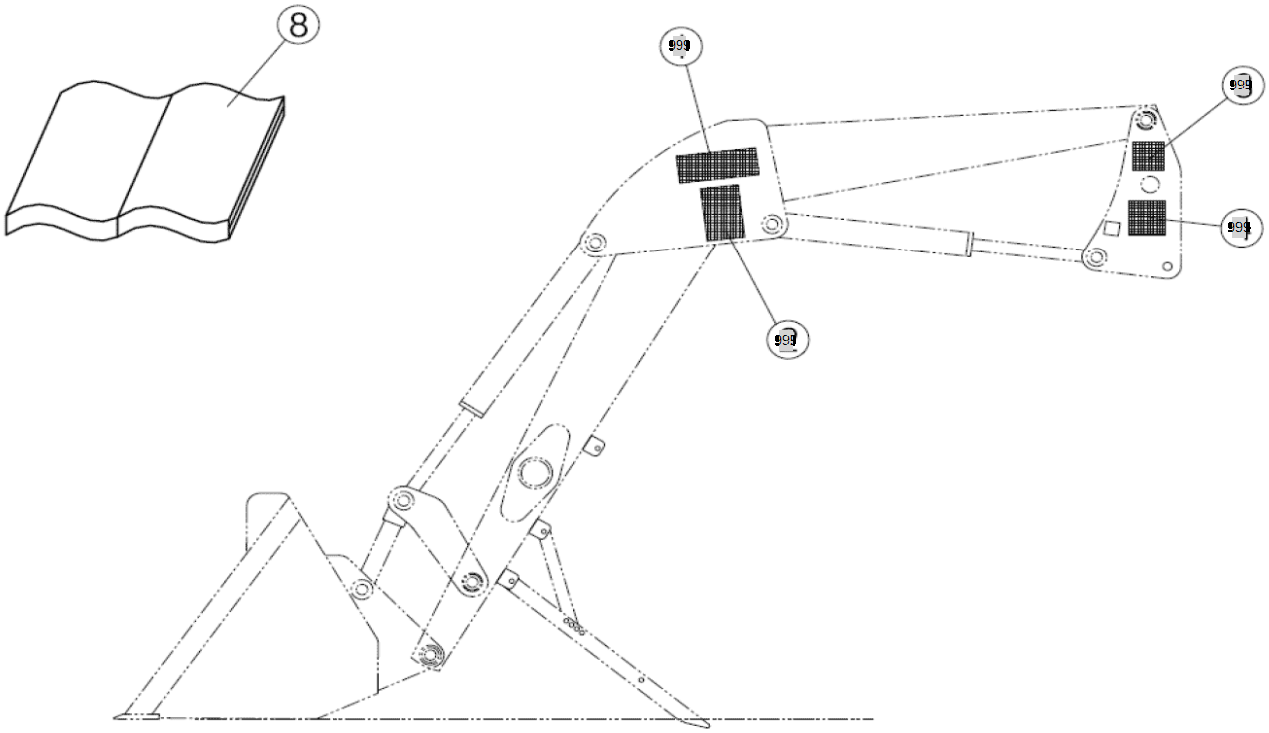

LH.

FIG 018 BL20A	DECAL AND MANUAL	Year/Month 2020/02

KeyNo.	Part Number	Part Name	Quantity	Other

FIG 019 BL20A	CONTROL VALVE SPARE PART	Year/Month 2020/02

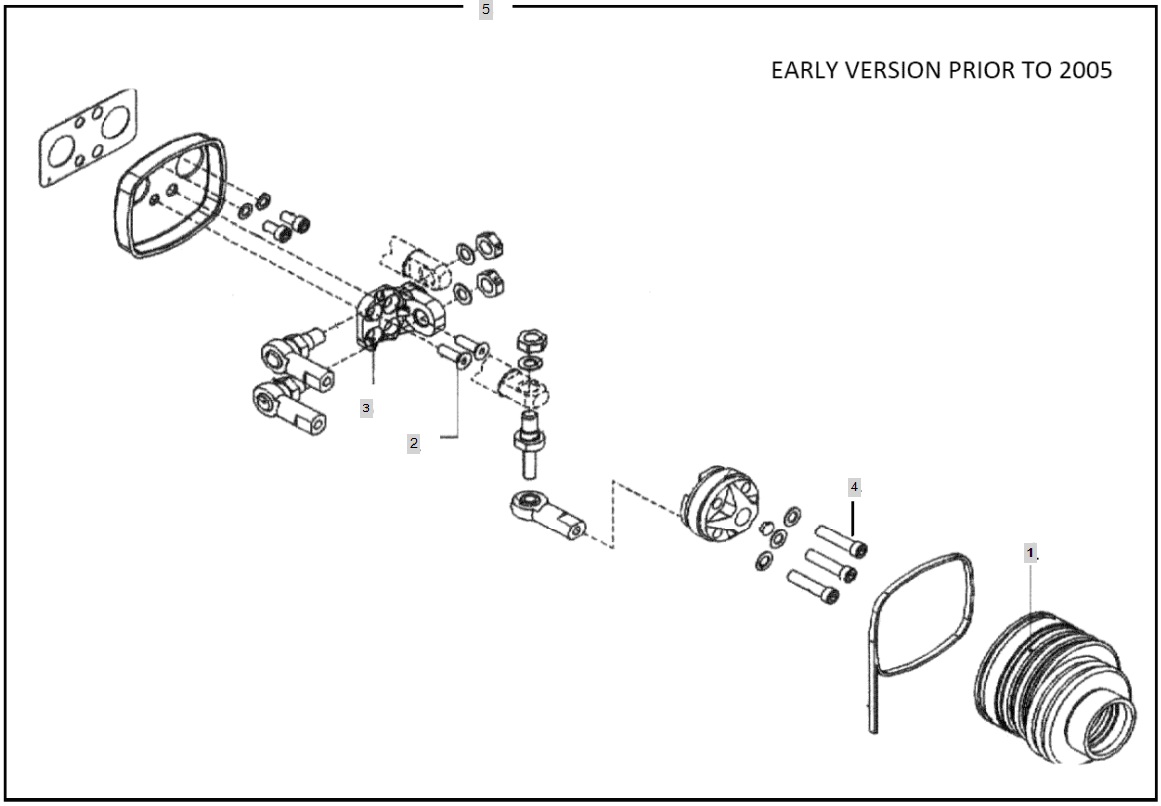

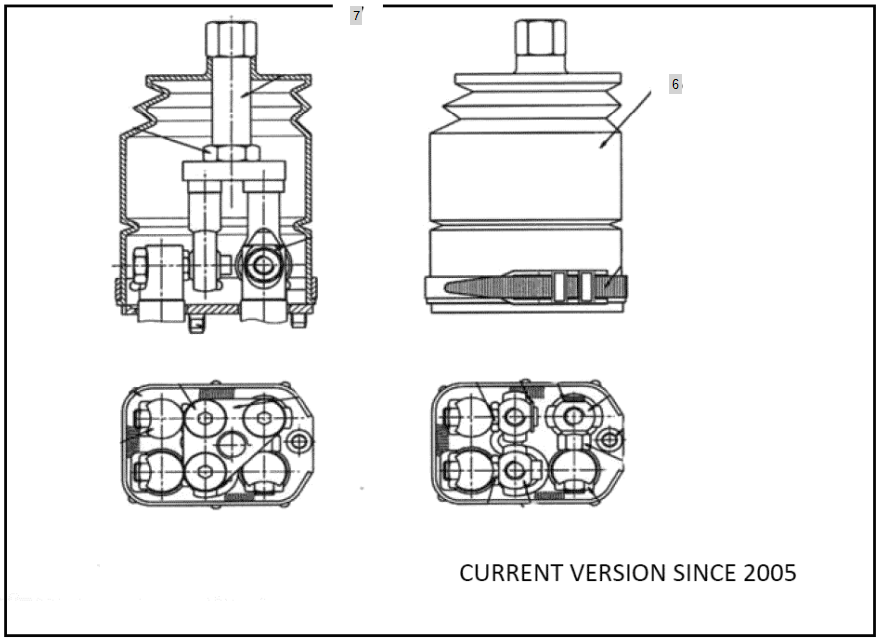

FIG 019 BL20A	CONTROL VALVE SPARE PART	Year/Month 2020/02

KeyNo.	Part Number	Part Name	Quantity	Other
1	3SOF200701	SUB TO-> M5625-31010	1	
2	4VIT705014	Bracket Screw for 3FUL220101	2	
3	3FUL220101	SUB-> M3520-31010	1	
4	4VIT606027	Bolt M6 x 25 - 12.9	3	
5	P0402589	SUB-> M3520-31010	1	
6	DO28601002R20	Rubber Boot small Hole ver.	1	
7	D055514008R	JOYSTICK REPAIR KIT	1	