KUKJE 3520 Branson Tractor

Parts Catalogue

BRANSON TRACTOR

CONTENTS

GROUP NO	GROUP NAME	PAGE
000	AC37210	5
001	LEVER ACCELERATOR	7
002	STEERING COLUMN	9
003	REVERSER ASS'Y	11
004	FRONT AXLE BRACKET	13
009	CENTER PIN SUPPORTER	15
010-2	TIE ROD - 20 SERIES EARLY VERSION	17
010-4	TIE ROD - 20 SERIES CURRENT VERSION	19
010-5	TIE ROD - UPDATE KIT FOR EARLY VERSION	21
012	RING GEAR	23
014	DIFFERENTIAL GEAR	25
015	PROPELLER SHAFT	27
016	FRONT SHAFT	29
018	CASE, FRONT AXLE	31
019	GEAR CASE, FRONT AXLE	33
021	FRONT 2ND SHAFT	35
022	FRONT SPINDLE	37
023	COVER SHAFT	39
032	PS CYLINDER	41
033	PS VALVE	43
034	PS PIPES	45
036	CLUTCH HOUSING	47
038-1	CLUTCH ASS'Y DUAL STAGE CLUTCH	49
040	CLUTCH RELEASE	51
041	TRANSMISSION CASE SHIFT	53
042	MAIN REVERSER GEAR	56
043	FRONT DRIVE & RANGE SHIFT GEAR	59
044	FRONT DRIVE, RANGE SHIFT	61
045	GEAR, PTO SPEED CHANGE	63
046	REAR AXLE CASE, PTO SHIFT	65
047	LEVER ASS'Y, PTO SPEED CHANGE	67
048	HOUSING, REAR AXLE	69
049	DRIVING PART, REAR AXLE	71
050	BRAKE	74
053	BRAKE, CLUTCH PEDAL	76

GROUP NO	GROUP NAME	PAGE
067	LEVER, MAIN SHIFT	79
099	HYDRAULIC PUMP	81
101	CASE, HYD CYLINDER	83
103-1	SCV VALVE SUPPORT	85
104	3 POINT LIFT PISTON ASS'Y	87
106	3 POINT LIFT CONTROL VALVE	89
108	3 POINT LIFT RELIEF VALVE	91
109	3 POINT LIFT STOP VALVE	93
110	3 POINT LIFT SAFETY VALVE	95
111	HYDRAULIC CONTROL	97
113	DRAFT CONTROL	100
114	HYDRAULIC PIPES	102
118	HYDRAULIC FILTER	104
119	WIRING HARNESS	106
124	BATTERY & HORN	108
125	SWITCH	110
132	LAMP	112
132-1	FOOT REST	114
134	METER ASS'Y	116
136	HOOD & SIDE PANEL	118
137	DASH BOARD	121
138	FENDER	123
140	SEAT	125
141	FUEL TANK	127
144	DECAL	129
145	DECALS	131
146	TOP LINK	133
147A	LIFT LINK R - EARLY VERSION	135
147B	LIFT LINK R - CURRENT VERSION	137
148A	LIFT LINK L - EARLY VERSION	139
148B	LIFT LINK L - CURRENT VERSION	141
150	LOWER LINK	143
152	DRAWBAR HITCH	145
158	ROPS	147
160	FRONT WEIGHT	149

GROUP NO	GROUP NAME	PAGE
191	RMK1 (SINGLE SCV), RMK2 (DOUBLE SCV) - CURRENT VERSION	151
200	FILTERS	153
E001	CYLINDER BLOCK	155
E002	GEAR CASE	158
E003	CYLINDER HEAD	160
E004	INTAKE MANIFOLD & AIR CLEANER	163
E005	EXHAUST MANIFOLD	165
E006	CAM SHAFT	167
E007	CRANK SHAFT	169
E008	PISTON	171
E009	LUB. OIL SYSTEM	173
E010	COOLING SYSTEM	175
E011	FUEL INJECTION PUMP	177
E012	FUEL INJECTION VALVE	179
E013	FUEL INJECTION SYSTEM & VALVE	181
E014	GOVERNOR	183
E015	ELECTRONICAL PART & OTHERS	185

FIG 000 3520	AC37210	Year/Month 2020/02

2 CHASSIS

1 ENGINE

FIG 000 3520	AC37210	Year/Month 2020/02

KeyNo.	Part Number	Part Name	Quantity	Other
1	AC37210_E	ENGINE	0	
2	AC37210_C	3520 [~2014]	0	

FIG 001 3520	LEVER ACCELERATOR	Year/Month 2020/02

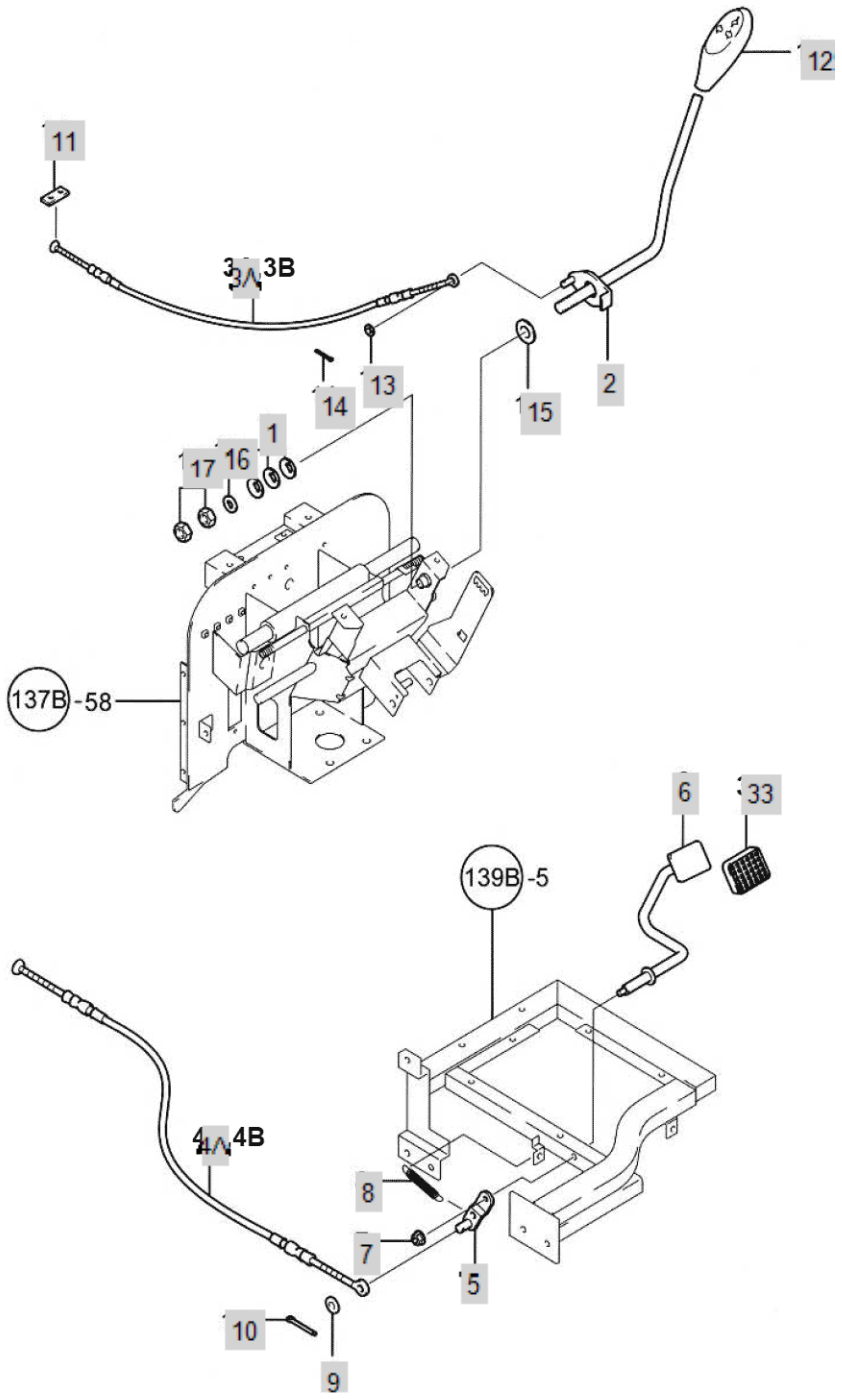

FIG 001 3520	LEVER ACCELERATOR	Year/Month 2020/02

KeyNo.	Part Number	Part Name	Quantity	Other
1	TC45010000A4	SPRINGWASHER10	3	
2	TC45020000A3	LEVER,ACCELERATOR	1	
3A	NT01500000C3	WIRE	1	
4A	NT01360000A3	WIRE(PEDAL),ACCEL.	1	
5	TA46050000A4	ARM	1	
6	NT01290000A2	ACCEL.PEDALASS`Y	1	
7	26367-060002	Nut, Hexa (Φ6)	1	
8	TT98200000A4	RETURNSPRING	1	
9	22137-060000	WASHER , PLAIN	1	
10	22417-160180	PIN , COTTER (1-18)	1	
11	TN01510000A4	RUBBERCLAMP	1	
12	NT01220000B3	KNOB, ACCELERATOR	1	
13	22137-100000	WASHER, PLAIN (Φ 10)	1	
14	22417-160180	PIN , COTTER (1-18)	1	
15	TC45060000A4	FRICTIONPLATE	1	
16	22137-100000	WASHER, PLAIN (Φ 10)	1	
17	26716-100002	Nut, Hexa (Φ10)	2	
33	TN01330000A4	RUBBERCOVER	1	

FIG 002 3520	STEERING COLUMN	Year/Month 2020/02

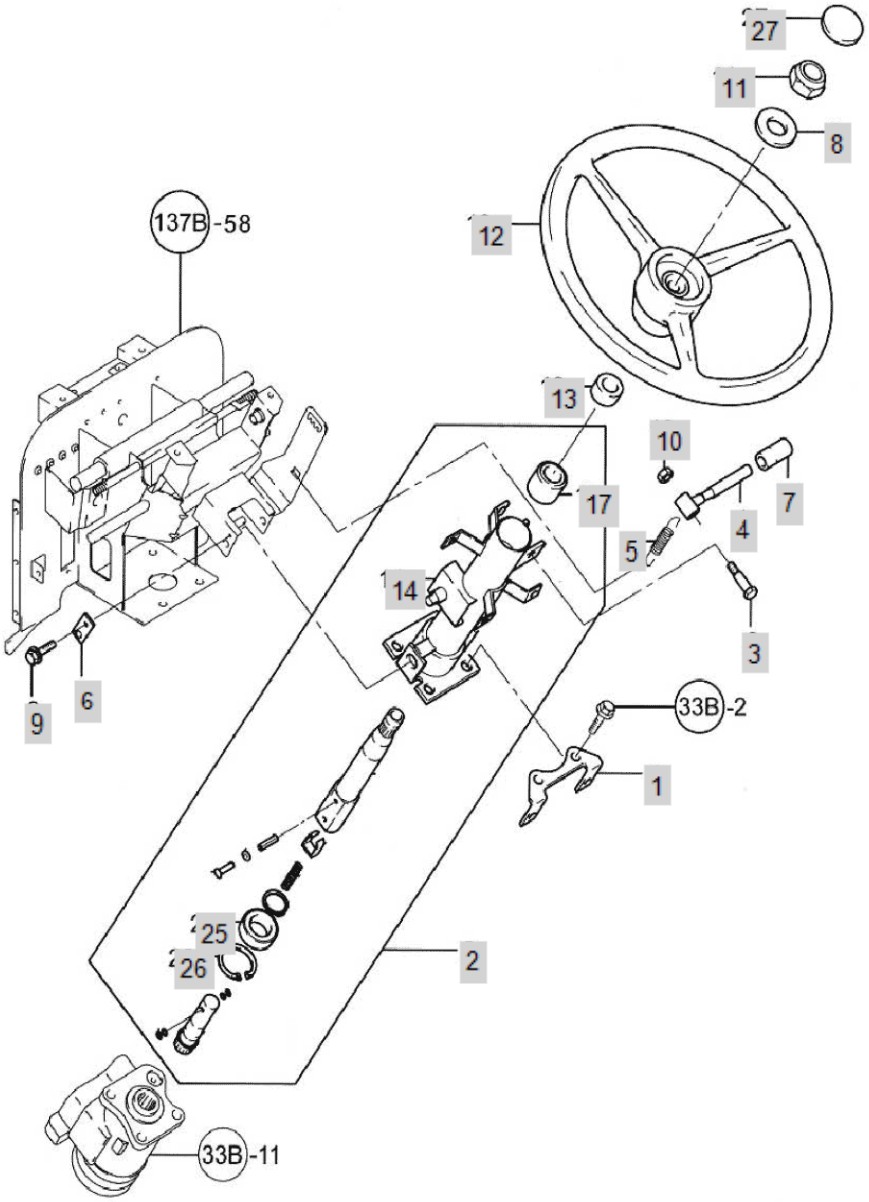

FIG 002 3520	STEERING COLUMN	Year/Month 2020/02

KeyNo.	Part Number	Part Name	Quantity	Other
1	TC65010000A4	BRACKET(COLUMCOVERR)	1	
2	NT01410000A2	COLUMASS`Y	1	
3	TC65030000A4	TILTLEVERPIN	1	
4	TC65040000A4	TILTLEVER	1	
5	TC65050000A4	TILTSPRING	1	
6	TC65060000A4	TILTPINASS'Y	2	
7	TB16020000A4	LEVERKNOB	1	
8	22137-160000	WASHER, PLAIN (Φ 16)	1	
9	26106-080122	Bolt, Hexa (8-12)	2	
10	26347-080002	Unut	1	
11	26357-160002	NUT	1	
12	TZ29030000A1	STEERING WHEEL	1	
13	TC65130000A4	COVER,SHAFT	1	
14	NT0141A100A2	STEERINGCOLUMN	1	
16	TC65020300A9	STEERINGSHAFT1	1	
17	TC65020400A9	COLUMNBUSH	1	
24	22242-000200	SNAP RING, SHAFT (Φ 20)	1	
25	24107-060044	Bearing, Ball (#6004) Dubble Cap	1	
26	22252-000420	RING, CIRCLIP (Φ 42)	1	
27	TZ29040000A4	STEERING WHEEL CAP -> TA00026432A	1	

FIG 003 3520	REVERSER ASS'Y	Year/Month 2020/02

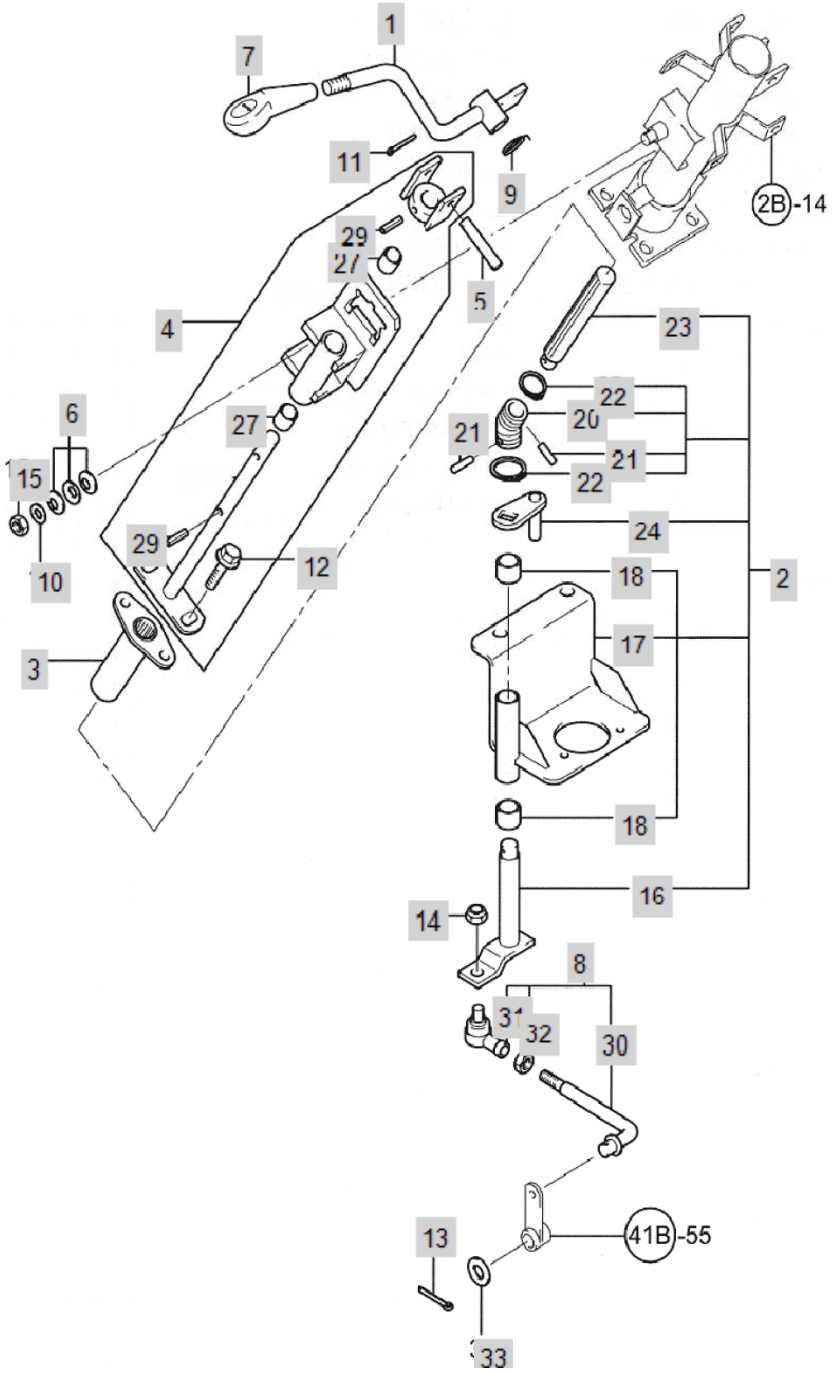

FIG 003 3520	REVERSER ASS'Y	Year/Month 2020/02

KeyNo.	Part Number	Part Name	Quantity	Other
1	NT03010000C1	REVERSER LEVER	1	
2	NT03000999A9	REVERSERSHAFTASS`Y	1	
3	TC94030000C4	COUPLING	1	
4	TC94040000A4	GEAR 4, MAIN SHIFT	1	
5	TC94050000A4	PIN(8*52)	1	
6	TC94060000A4	PRING12	3	
7	NT01230000A3	KNOB, SHUTTLE	1	
8	NT01050099A9	RODA'SSY[F-R]	1	
9	TC94090000A4	RETURNSPRING(F-R)	1	
10	22137-100000	WASHER, PLAIN (Φ 10)	1	
11	22417-200300	PIN , COTTER (2-30)	1	
12	26106-080162	SCREW,HEXFLANGEHEADCAP	2	
13	22417-030160		1	
14	26347-080002	Unut	1	
15	26347-100002	U-NUT	1	
16	NT01010000A4	SHAFT,REVERSER	1	
17	NT01020000A3	BRACKET,REVERSERSHAFT	1	
18	24550-016150	DRYBUSH	2	
20	TC94020300A4	JOINT ASSY	1	
21	TC94020302A9	SHAFTASSY	2	
22	TC94020303A9	SNAP RING	2	
23	NT01030000A4	SHAFT[INSIDE]	1	
24	NT01040000A4	JOINT	1	
27	24550-015120	DRYBUSH	2	
29	22351-060032	PIN, SPRING (6-32)	2	
30	NT01050000A4	ROD(F-R)	1	
31	TC94080200A4	RODEND	1	
32	26716-080002	NUT,HEX (D8)	1	
33	22117-080000	WASHER, PLAIN (Φ 08)	1	

FIG 004 3520	FRONT AXLE BRACKET	Year/Month 2020/02

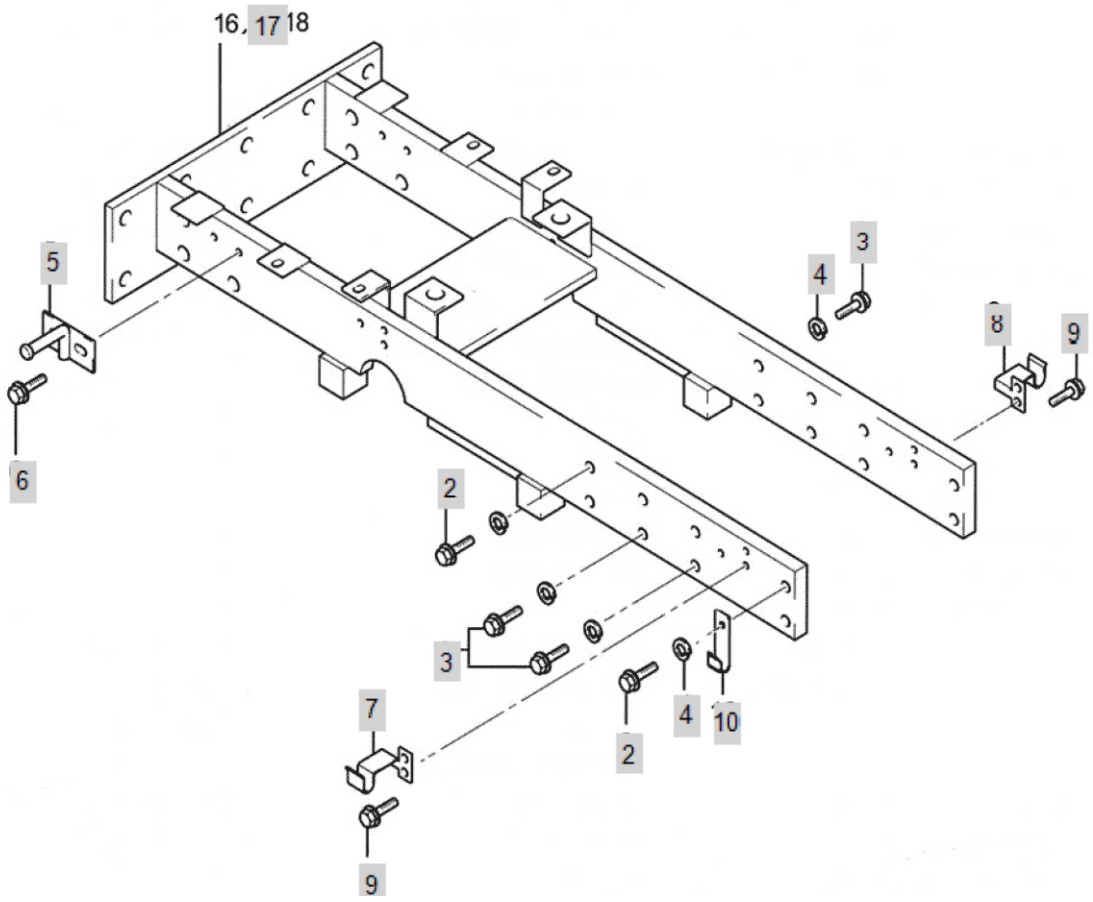

FIG 004 3520	FRONT AXLE BRACKET	Year/Month 2020/02

KeyNo.	Part Number	Part Name	Quantity	Other
2	TT08200000A4	BOLT	2	
3	TT08230000A4	BOLT	14	
4	TT08220000A4	LOCKSPRINGWASHER	16	
5	NT04410000B4	HINGE, FRONT MASK	2	
6	26106-080202	SQR FLANGE BOLT	4	
7	NT04140000A4	SIDECOVERHINGE(L)	2	
8	NT04150000A4	SIDECOVERHINGE(R)	2	
9	26106-080162	SCREW,HEXFLANGEHEADCAP	8	
10	NT04100000A4	WIRECLAMP	6	
17	NT0440H000A0	FRONTAXLE.BRACKETASS`Y	1	

FIG 009 3520	CENTER PIN SUPPORTER	Year/Month 2020/02

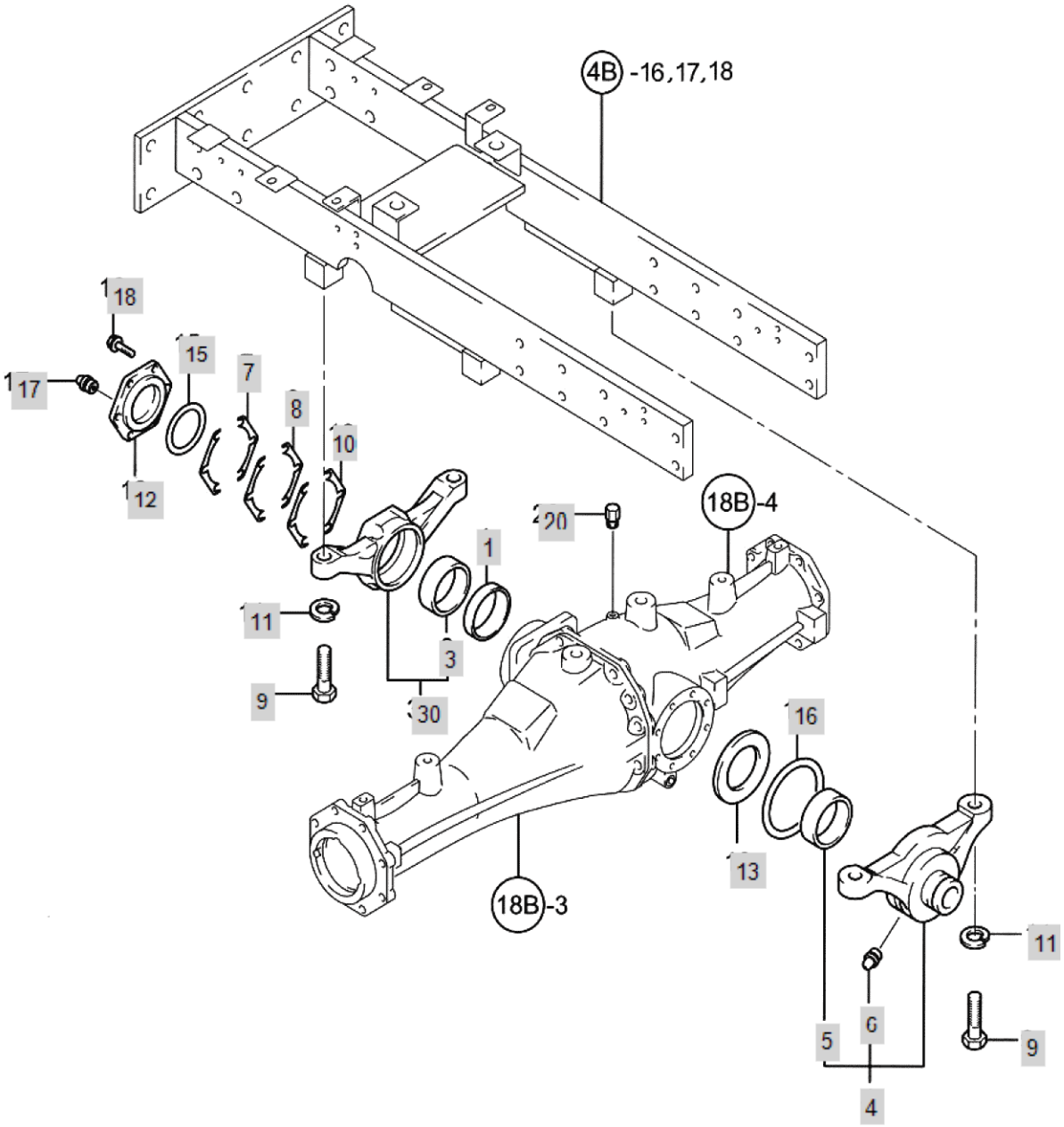

FIG 009 3520	CENTER PIN SUPPORTER	Year/Month 2020/02

KeyNo.	Part Number	Part Name	Quantity	Other
1	TT09010000A3	OILSEAL	1	
3	TT09030000A3	BUSH	1	
4	TT09040000A9	AXLESUPPORTASSY	1	
5	TT09030000A3	BUSH	1	
6	TA27160000A4	GREASE NIPPLE	1	
7	TT09070000A4	SHIMA	8	
8	TT09080000A4	SHIMB	6	
9	TT09090000A4	Bolt	4	
10	TT09100000A4	SHIMC	4	
11	TT09110000A4	LOCKSPRINGWASHER	4	
12	TT09120000A3	COVER	1	
13	TT09130000A4	THRUSTWASHER	1	
15	24321-000750	SEAL,ORING	1	
16	24321-001150	O-RING(G115)	1	
17	TA27160000A4	GREASE NIPPLE	1	
18	26013-080252	Bolt, Hexa (8-25)	6	
20	TD20350000A4	AIRBREEDER	1	
30	TL09300000A9	AXLE.SUPORT	1	

FIG 010-2 3520	TIE ROD - 20 SERIES EARLY VERSION	Year/Month 2020/02

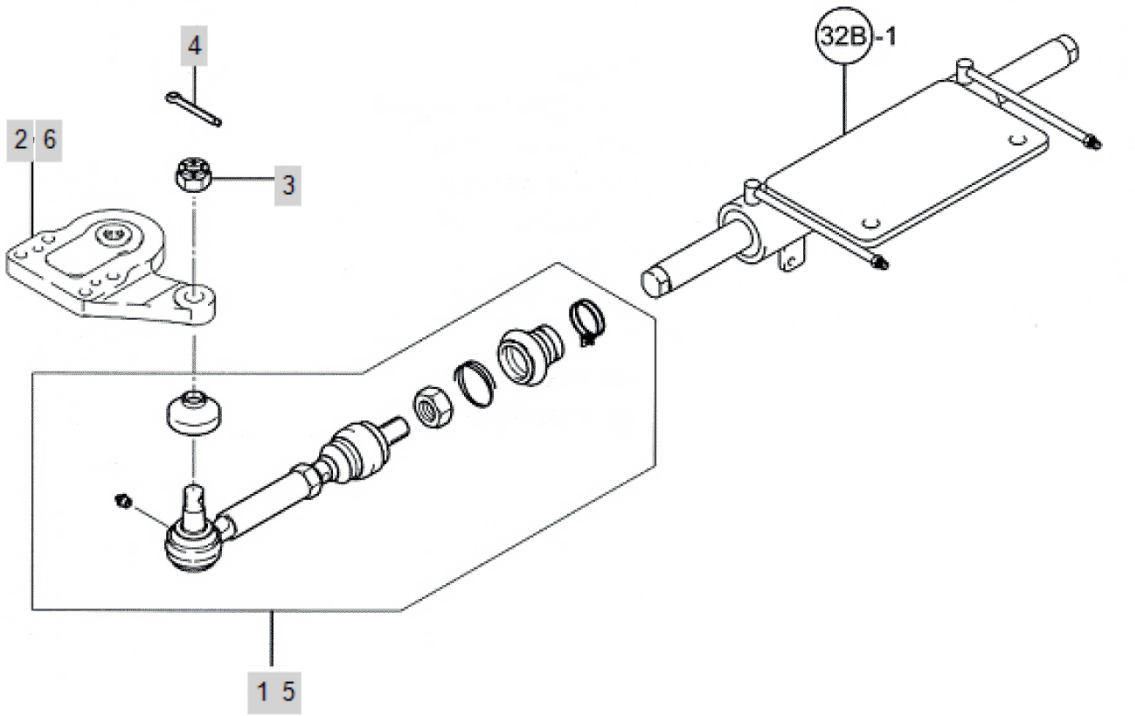

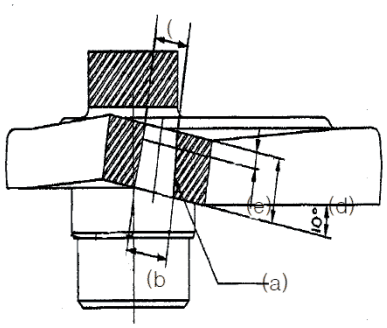

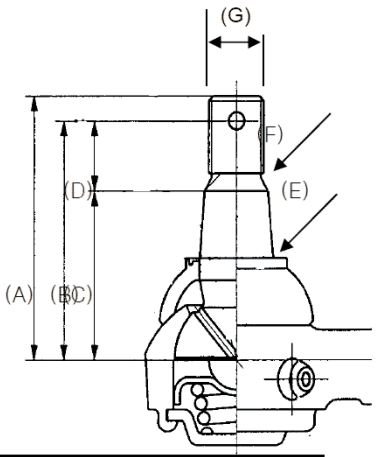

	NT19010000B1,NT19020000B1
(a)	Taper1/6
(b)	Ø16.05
(c)	Ø13.05
(d)	18mm
(e)	4.5mm

	NT3240H000A3,NT3241H000A3
(A)	53mm
(B)	48mm
(C)	34mm
(D)	14mm
(E)	Taper 1/6
(F)	M12 X P1.25 (8mm)
(G)	8mm (THREAD)

FIG 010-2 3520	TIE ROD - 20 SERIES EARLY VERSION	Year/Month 2020/02

KeyNo.	Part Number	Part Name	Quantity	Other
1	NT3240H000A3	TIERODASS'Y(LH)	1	
2	NT19010000B1		1	
3	TC56030000A4	NUT	2	
4	22417-400400	PIN , COTTER (3-35)	2	
5	NT3241H000A3	TIERODASS`Y(RH)	1	
6	NT19020000B1		1	

FIG 010-4 3520	TIE ROD - 20 SERIES CURRENT VERSION	Year/Month 2020/02

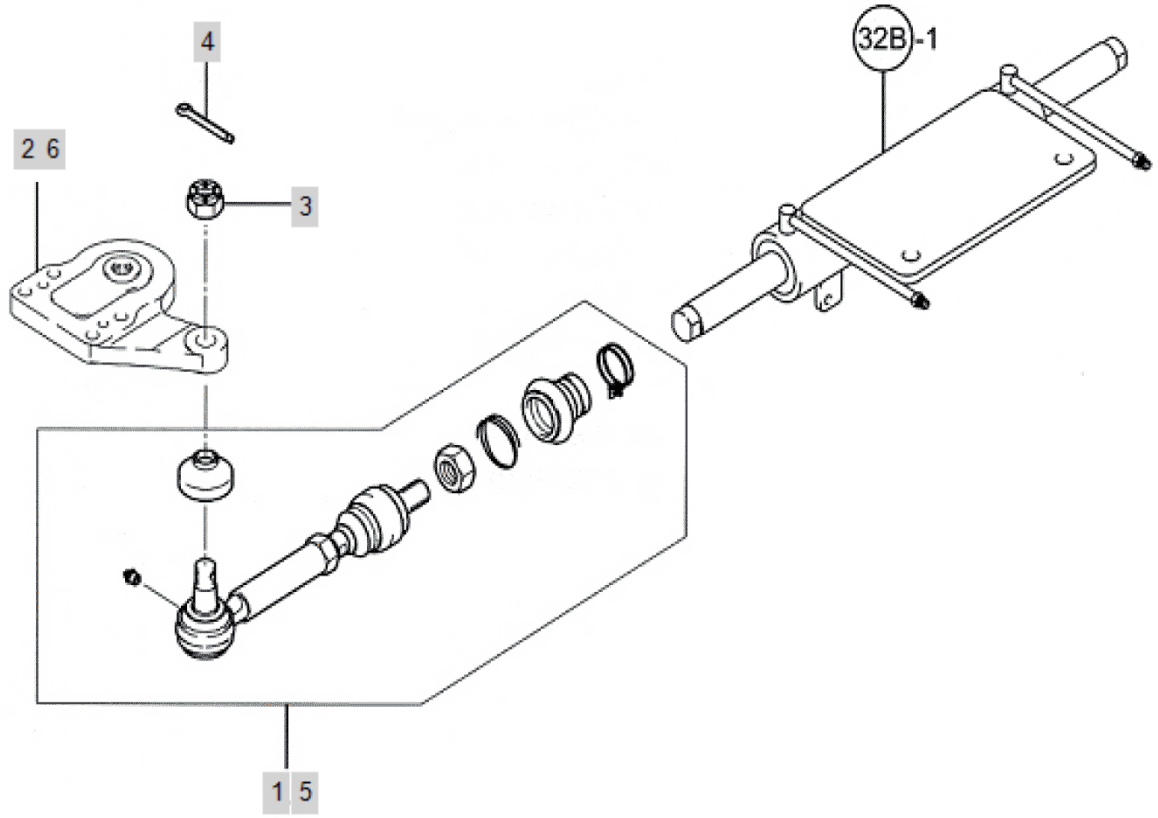

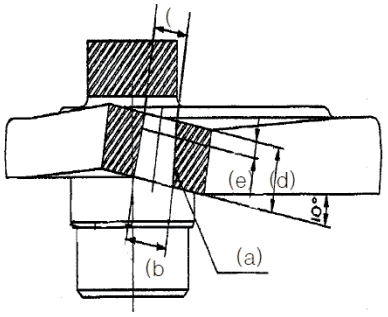

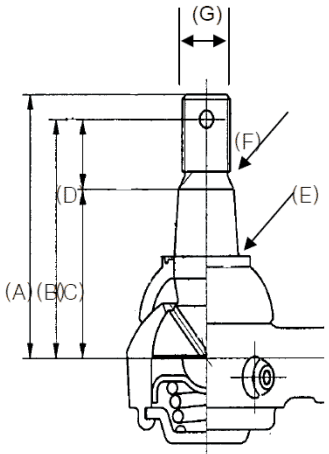

	NT19010000C1,NT19020000C1
(a)	Taper 1/10
(b)	Ø20(+0,-0.1)
(c)	Ø17.8
(d)	22mm
(e)	delete

	NT3240H000B3,NT3241H000B3
(A)	60.5mm
(B)	54.5mm
(C)	41.5mm
(D)	13mm
(E)	Taper 1/10
(F)	M16 X P1.5
(G)	12mm (THREAD)

FIG 010-4 3520	TIE ROD - 20 SERIES CURRENT VERSION	Year/Month 2020/02

KeyNo.	Part Number	Part Name	Quantity	Other
1	NT3240H000B3	TIE ROD ASSY (LH)	1	
2	NT19010000C1	KNUCKLE ARM (LH)	1	
3	TT10020000A4	CASTLE NUT M16	2	
4	22417-400400	PIN , COTTER (3-35)	2	
5	NT3241H000B3	TIE ROD ASSY (RH)	1	
6	NT19020000C1	KNUCKLE ARM (RH)	1	

FIG 010-5 3520	TIE ROD - UPDATE KIT FOR EARLY VERSION	Year/Month 2020/02

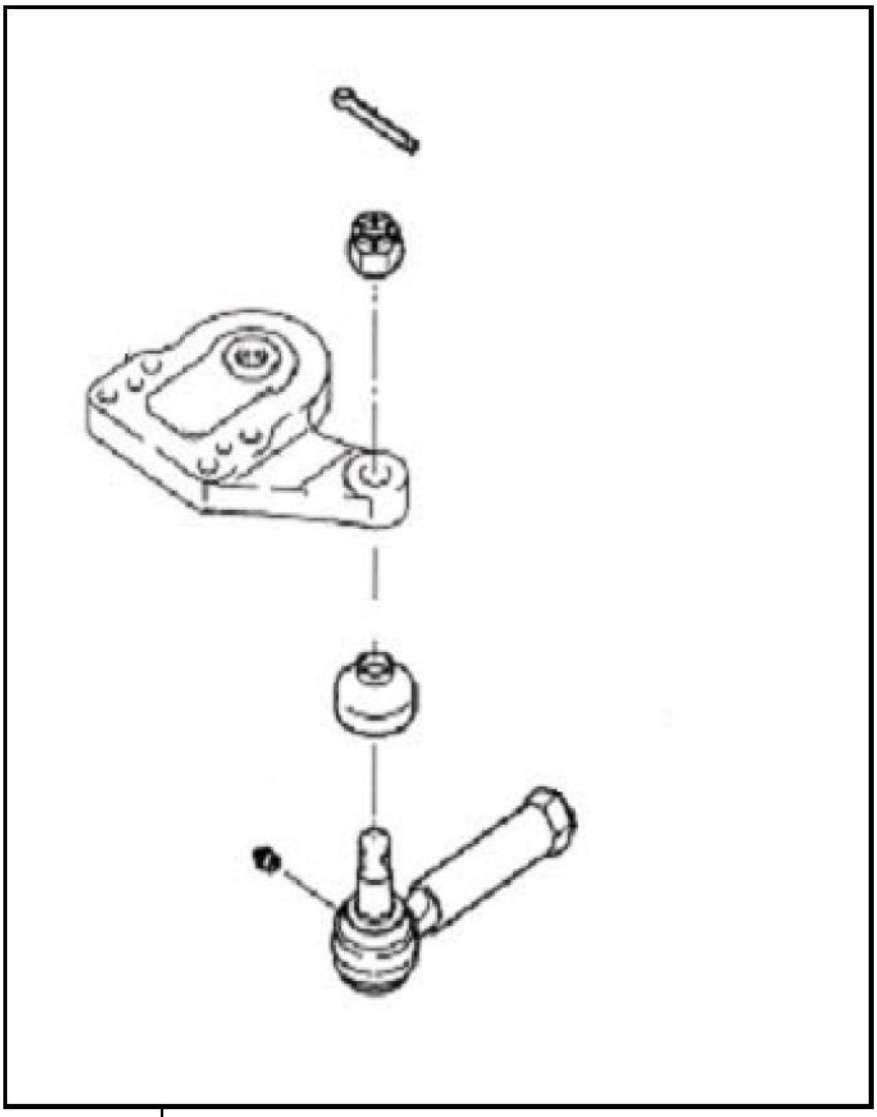

1A, 1B

FIG 010-5 3520	TIE ROD - UPDATE KIT FOR EARLY VERSION	Year/Month 2020/02

KeyNo.	Part Number	Part Name	Quantity	Other
1B	NTA320H000A9	TIE-ROD KIT(20S)	1	

FIG 012 3520	RING GEAR	Year/Month 2020/02

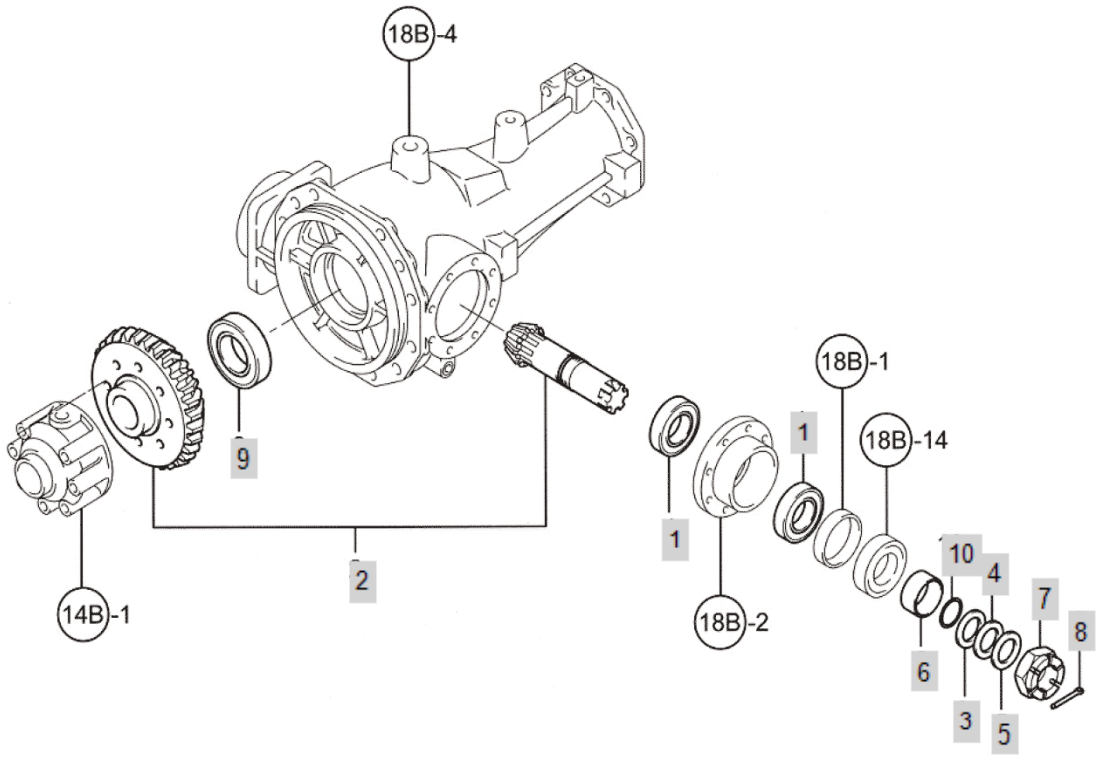

FIG 012 3520	RING GEAR	Year/Month 2020/02

KeyNo.	Part Number	Part Name	Quantity	Other
1	TB19080000A4	BEARING,TAPERROLLER	1	
2	TN12020000A9	RING GEAR ASS'Y	1	
3	TT12030000A4	SHIMA	1	
4	TT12040000A4	SHIMB	1	
5	TT12050000A4	SHIMC	1	
6	TT12060000A4	SEALCOLLAR	1	
7	TT12070000A4	NUT	1	
8	22417-400600	PIN , COTTER (4-60)	1	
9	24101-060124	Bearing, Ball (#6012)	1	
10	24341-000320	O-RING, FIX (Φ32)	1	

FIG 014 3520	DIFFERENTIAL GEAR	Year/Month 2020/02

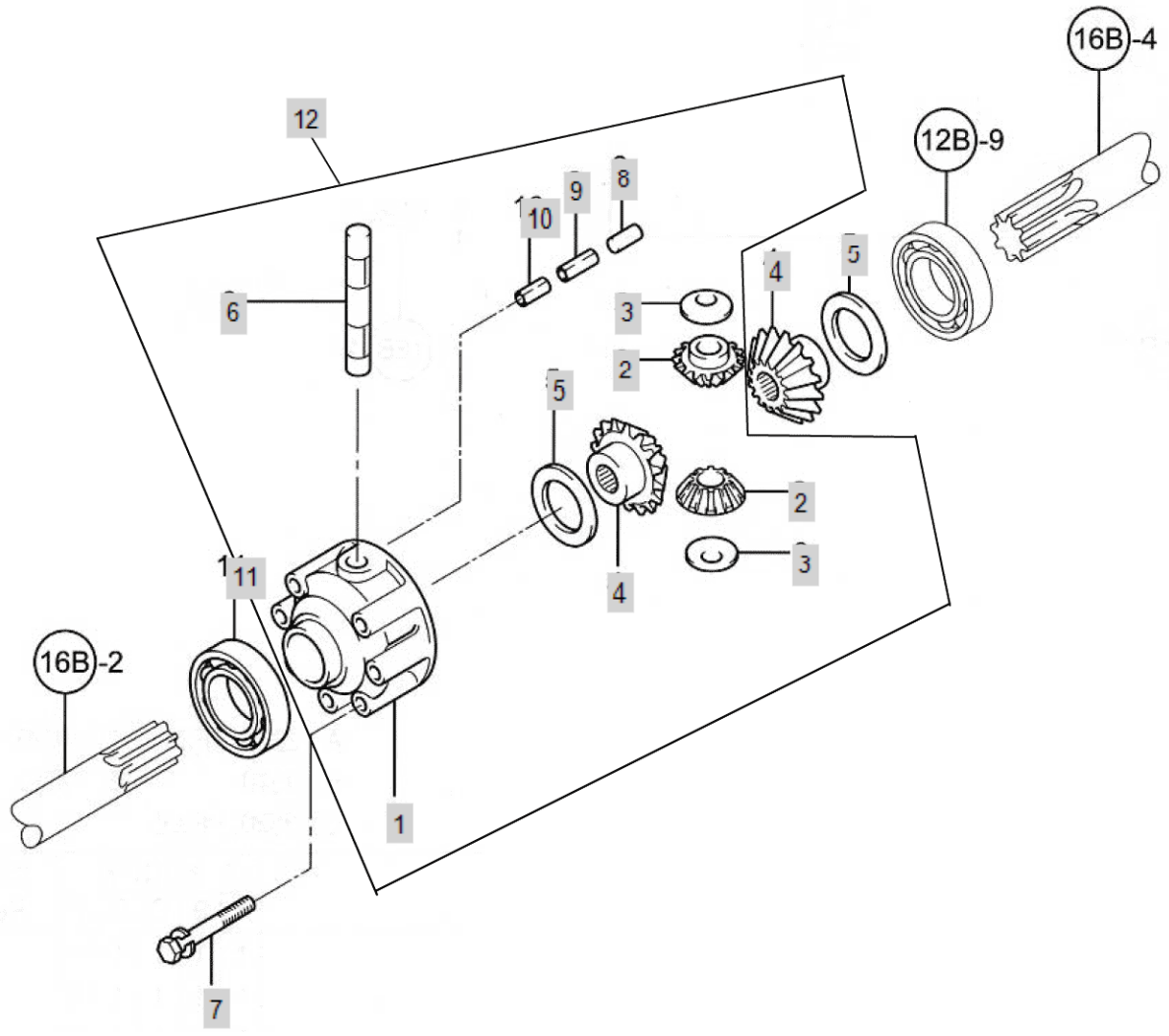

FIG 014 3520	DIFFERENTIAL GEAR	Year/Month 2020/02

KeyNo.	Part Number	Part Name	Quantity	Other
1	TT14010000A3	Case, Differential Driving	A	
2	TD21140000A4	PINION,DIFFERENCIAL	1	
3	TT14030000A4	LINER	2	
4	TD21150000A3	BEVEL GEAR 10T, DIFF.CASE	2	
5	TD21170000A4	LINER, DIFF. CASE	2	
6	TT14060000A4	SHAFT,DIFF.PINION	2	
7	TD21230000A4	BOLT	6	
8	22312-100180	PIN, DOWEL (10-18)	1	
9	22351-035032	PIN, SPRING (3.5-32)	2	
10	22351-060032	PIN, SPRING (6-32)	1	
11	24101-060104	Bearing, Ball (#6010)	1	
12	TT14000000A9	DIFF. CASE ASSY	1	

FIG 015 3520	PROPELLER SHAFT	Year/Month 2020/02

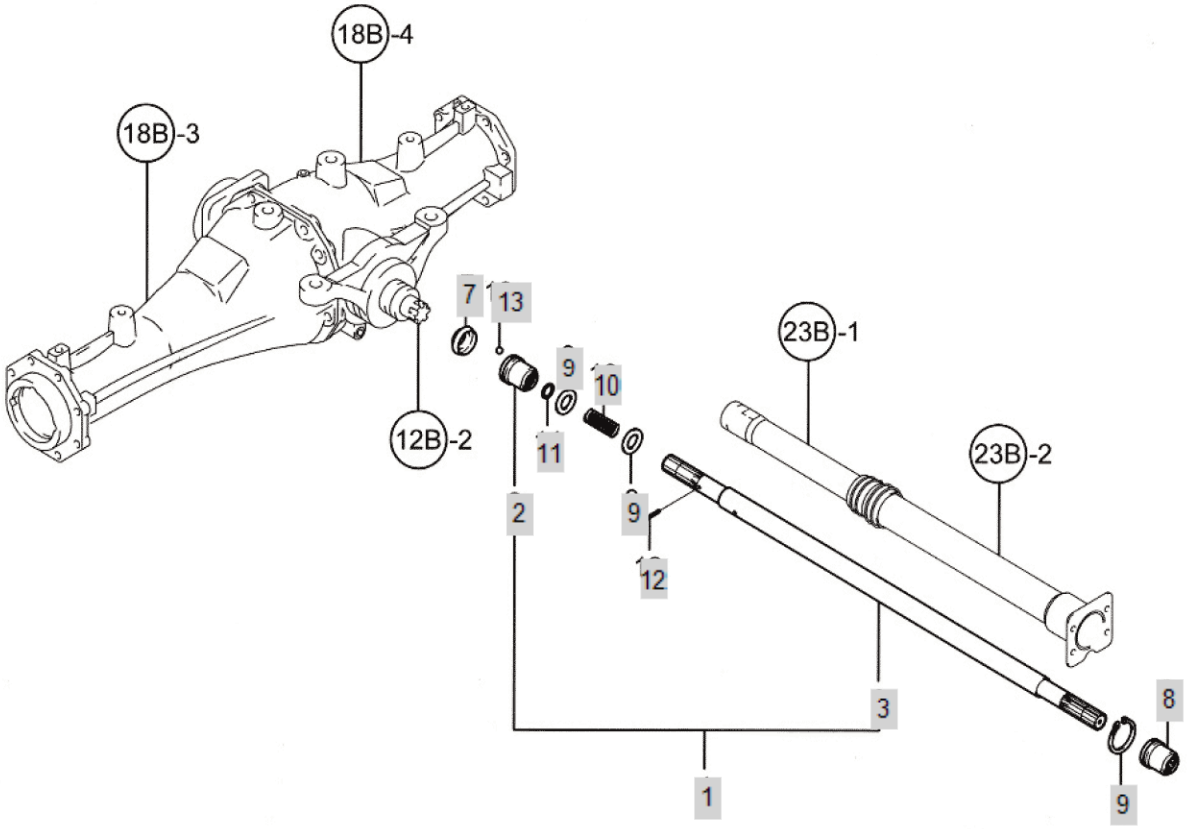

FIG 015 3520	PROPELLER SHAFT	Year/Month 2020/02

KeyNo.	Part Number	Part Name	Quantity	Other
1	TN15010000A9		1	
2	TT15020000A4	COUPLINGB.F	1	
3	TN15030000E3	SHAFT,PROPELLER	1	
3-1	TN15030000A3	PROPELLERSHAFT(35PS)	1	
7	TT15070000A4	BOOTS, DRIVE SHAFT	2	
8	TT15080000A4	COUPLINGREAR	1	
9	TD21270000A4	O-RING, FIX (Φ28)	3	
10	TT15100000A4	SPRING	1	
11	TD21290000A4	SEAL,SPINESHAFT	1	
12	22417-300350	PIN , COTTER (3-35)	1	
13	24190-110001	Ball, Steel (11/32)	12	

FIG 016 3520	FRONT SHAFT	Year/Month 2020/02

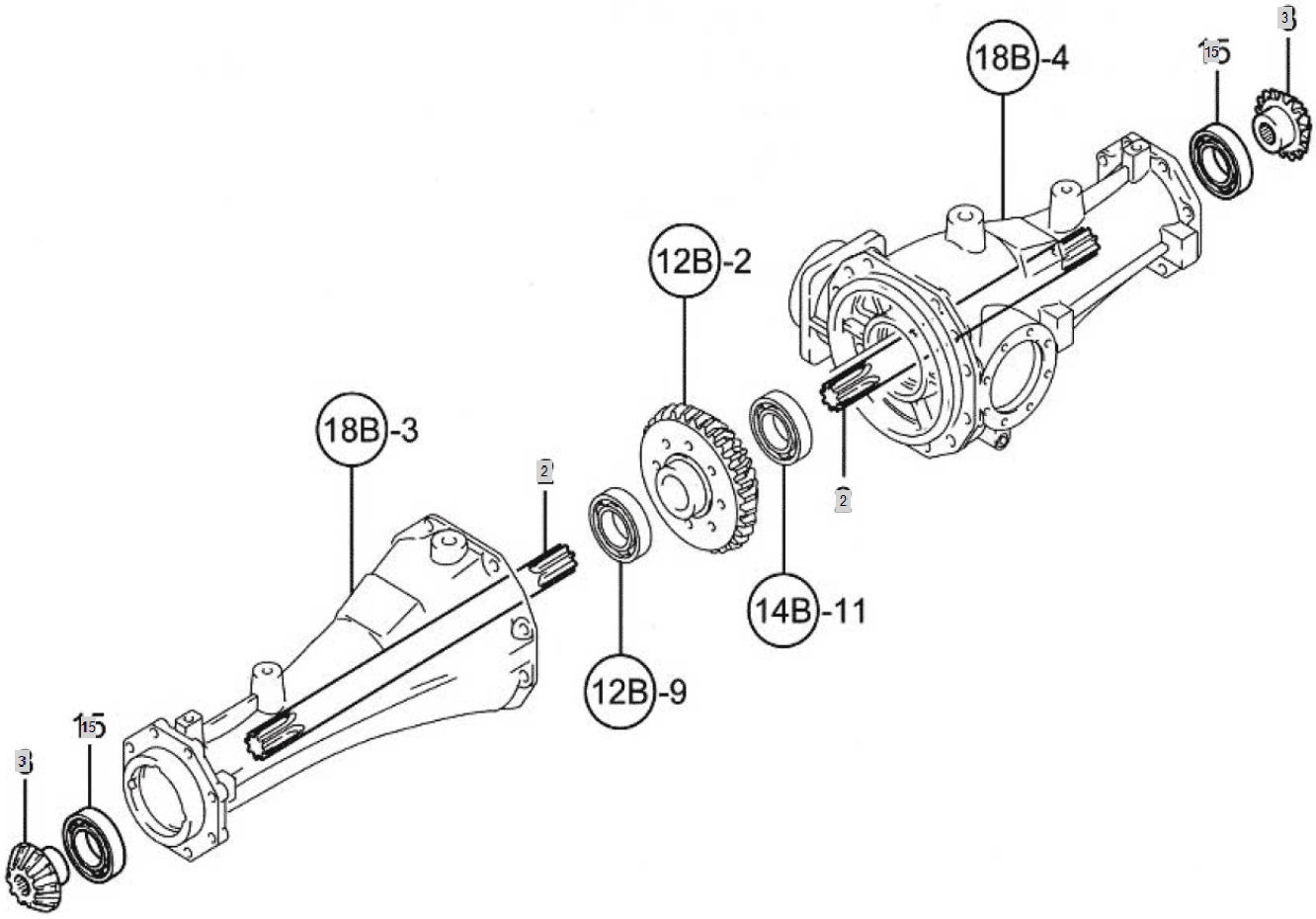

FIG 016 3520	FRONT SHAFT	Year/Month 2020/02

KeyNo.	Part Number	Part Name	Quantity	Other
2	TL16200000A3	FRONT AXLE SHAFT	2	
3	TT16030000A3	PINION	2	
15	24101-062084	Bearing, Ball (#6208)	2	

FIG 018 3520	CASE, FRONT AXLE	Year/Month 2020/02

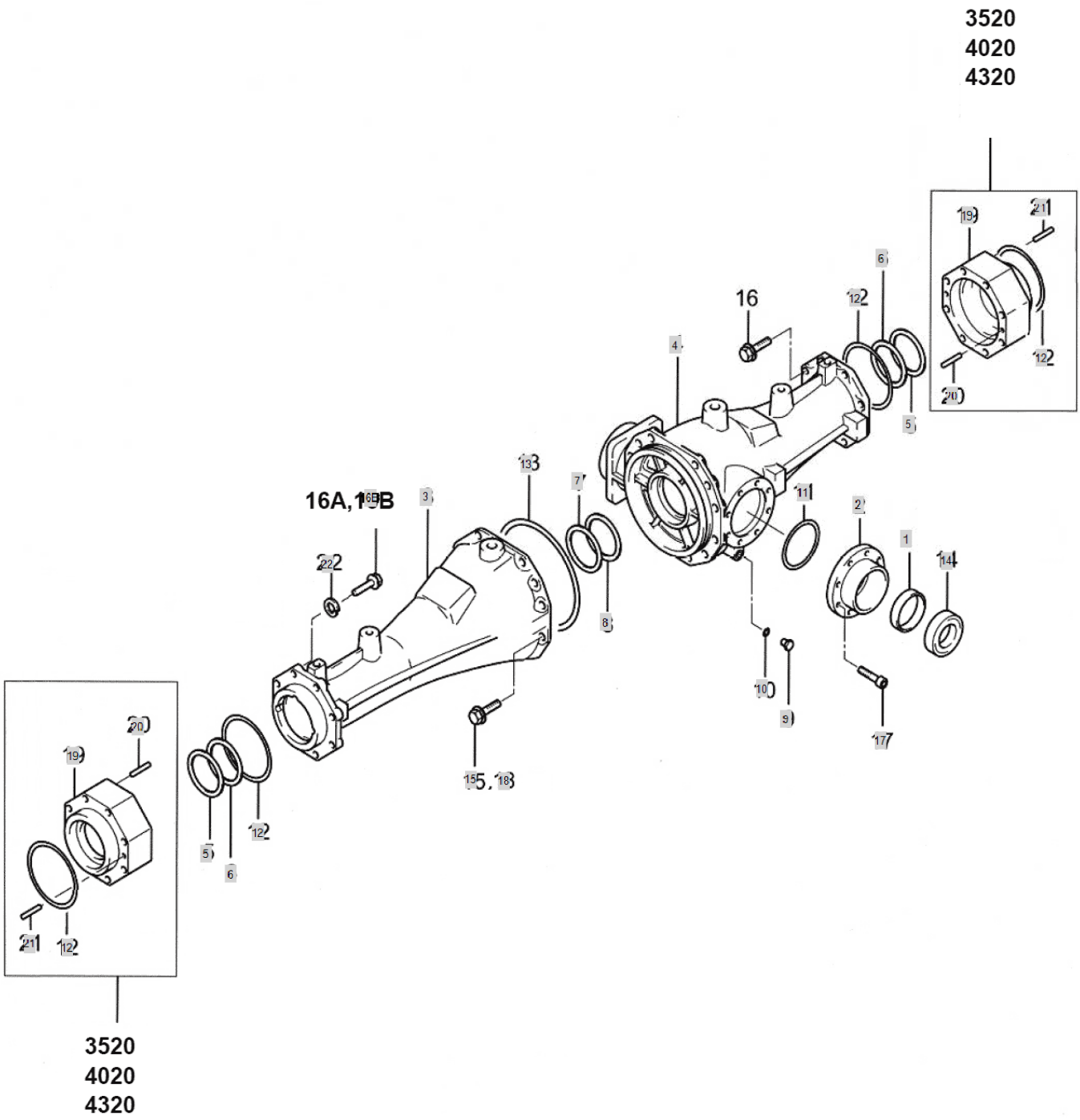

FIG 018 3520	CASE, FRONT AXLE	Year/Month 2020/02

KeyNo.	Part Number	Part Name	Quantity	Other
1	TT18010000A4	SPACE62	1	
2	TT18020000A3	RETAINERBEARING	1	
3	NT18200000A0	CASE[L]FRONT,AXLE	1	
4	NT18210000A0	CASE[R]FRONT,AXLE	1	
5	TT18050000A4	SHIMA	4	
6	TT18060000A4	SHIMB	4	
7	TT18070000A4	SHIMA	2	
8	TT18080000A4	SHIMB	2	
9	23491-140002	PLUG, DRAIN -> 23490-140002	1	
10	24311-000160	O-RING, DYNAMIC (Φ16)	1	
11	24321-000700	O-RING1AG-70	1	
12	24321-001000	O-RING(G-100)	2	
13	24321-001700	O-RINGG-170	1	
14	24421-456209	OILSEAL(TCTYPE)	1	
15	26013-120302	HEX BOLT W/WASHER	10	
16B	26013-120902	BOLT	8	
17	26450-080202	HEXAGONSOCKETCAPBOLT	8	
18	26013-120502	BOLT12X50	2	
19	NT18180000A2	SPACER	2	
20	22312-080160	PIN, DOWEL (8-16)	4	
21	22312-100200	PIN, DOWEL (10-20)	4	
22	TT08220000A4	LOCKSPRINGWASHER	8	

FIG 019 3520	GEAR CASE, FRONT AXLE	Year/Month 2020/02

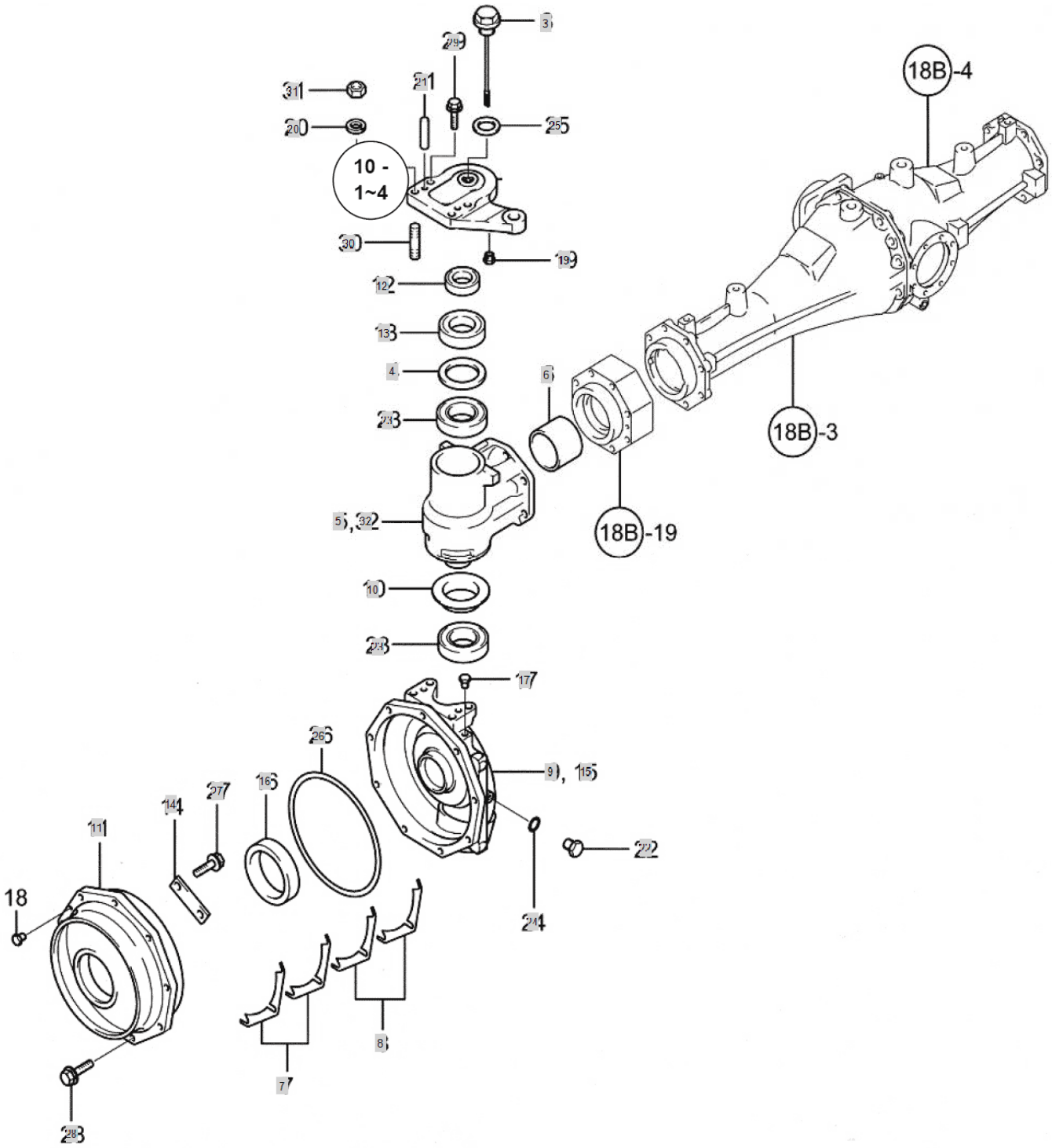

FIG 019 3520	GEAR CASE, FRONT AXLE	Year/Month 2020/02

KeyNo.	Part Number	Part Name	Quantity	Other
3	TT19030000A3	PLUG	2	
4	TT19040000A4	SPACER	2	
5	NT19050000B1	FRONT GEAR CASE(L)	1	
6	TT19060000A4	SPACER	2	
7	TT19070000A4	SHIMA	12	
8	TT19080000A4	SHIMB	12	
9	TT19090000A1	HOUSING (LH),FRONT GEAR	1	
10	TT19100000A3	SEAL55X85	2	
11	TT19110000A3	CASE,FRONTBEARING	2	
12	TT19120000A3	SISLEEVE	2	
13	TT19130000A3	OIL SEAL	2	
14	TT19140000A4	SUPPORTBEARING	4	
15	TT19150000A1	HOUSING (RH), FRONT GEAR	1	
16	TT19160000A4	OILSEAL	2	
17	TT19170000A4	PLUGRUBBER	2	
19	TB26060000A4	PLUGRUBBER	2	
20	22217-120000	WASHER, SPRING (Φ 12)	4	
21	22312-100320	PIN, DOWEL (10-32)	4	
22	23491-140002	PLUG, DRAIN -> 23490-140002	2	
23	24101-062094	BALL BEARING (#6209)	4	
24	24311-000160	O-RING, DYNAMIC (Φ16)	2	
25	24311-000220	O-RING, DYNAMIC (Φ22)	2	
26	24321-002200	O-RING	2	
27	26013-080252	Bolt, Hexa (8-25)	8	
28	26013-100252	SCREW,CAPTIVEWASHERCAP	18	
29	26013-120402	Bolt, Hexa (12-40)	4	
30	26216-120352	STEELBOLT	4	
31	26716-120002	BOLT,CYLINDER HEAD(B)	4	
32	NT19330000A1	FRONTGEARCASE(R)	1	

FIG 021 3520	FRONT 2ND SHAFT	Year/Month 2020/02

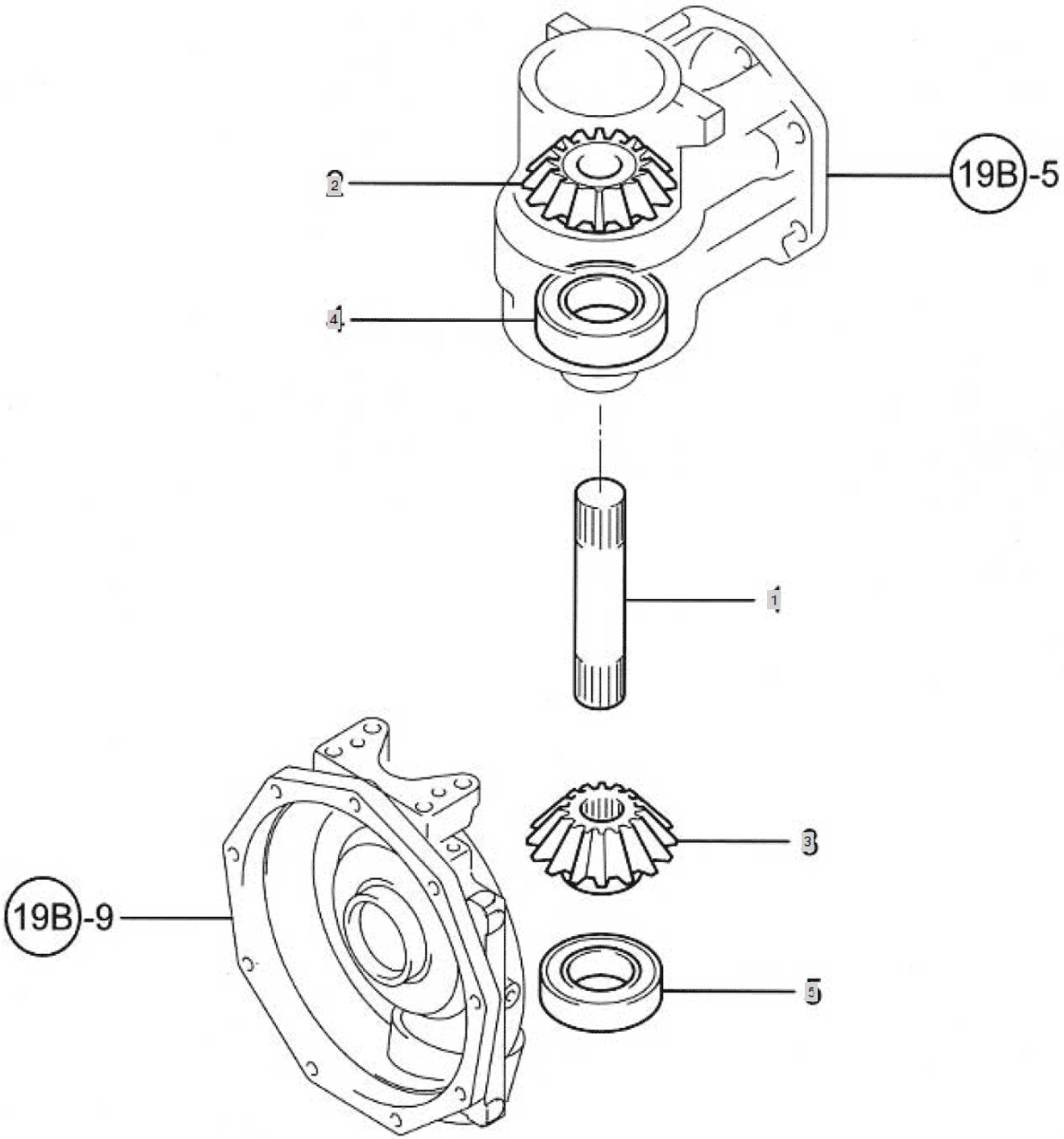

FIG 021 3520	FRONT 2ND SHAFT	Year/Month 2020/02

KeyNo.	Part Number	Part Name	Quantity	Other
1	TT21010000A4	SHAFTFRONT	2	
2	TT21020000A3	GEAR 19T	2	
3	TT21030000A3	PINIONFINAL	2	
4	TT21040000A4	BEARING	2	
5	24101-060094	Bearing, Ball (#6009)	2	

FIG 022 3520	FRONT SPINDLE	Year/Month 2020/02

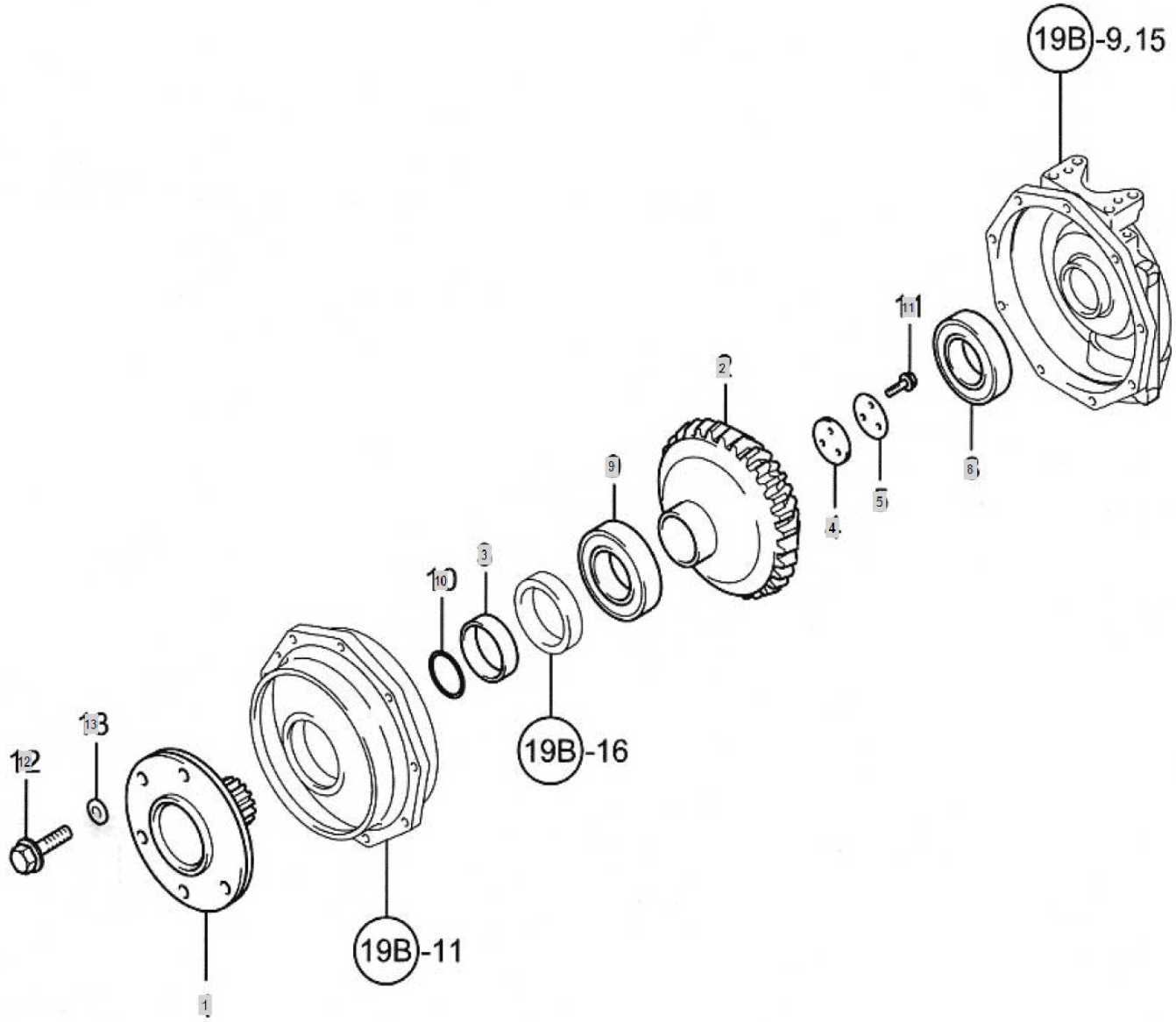

FIG 022 3520	FRONT SPINDLE	Year/Month 2020/02

KeyNo.	Part Number	Part Name	Quantity	Other
1	TT22010000A3	FRONTSPINDLE	2	
2	TT22020000A3	GEAR, FRONT FINAL(44T)	2	
3	TT22030000A4	SEAL COLLAR	2	
4	TT22040000A4	WASHER	2	
5	TT22050000A4	WASHER	2	
8	24101-060144	BALL BEARING (#6014)	2	
9	24101-062134	BEARING, BALL (#6213)	2	
10	24325-000650	O-RINGG65	2	
11	26116-100252	BOLT7T(100X25)	6	
12	TD23120000A4	BOLT	12	
13	TB29430000A4	WASHER	12	

FIG 023 3520	COVER SHAFT	Year/Month 2020/02

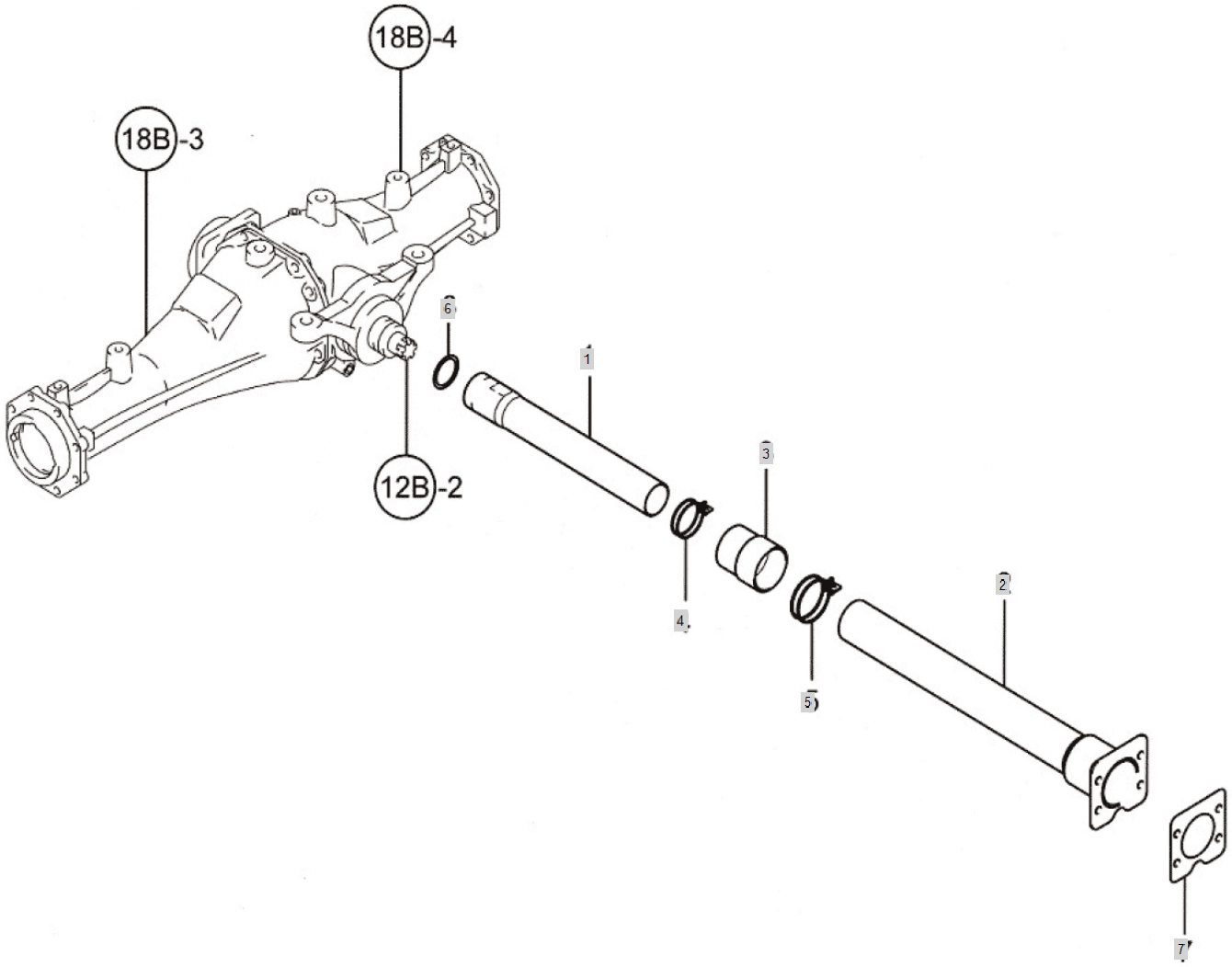

FIG 023 3520	COVER SHAFT	Year/Month 2020/02

KeyNo.	Part Number	Part Name	Quantity	Other
1	TN23010000A3	SHAFT COVER, FRONT	1	
2	TN23020000A3	COVER(REAR),SHAFT	1	
3	TN23030000A4	BOOT,COVER	1	
4	23010-060000	HOSEBAND	1	
5	23010-065000	HOSEBAND65	1	
6	24311-000450	O-RING, DYNAMIC (Φ45)	1	
7	TN23070000A4	PACKINGCOVER	1	

FIG 032 3520	PS CYLINDER	Year/Month 2020/02

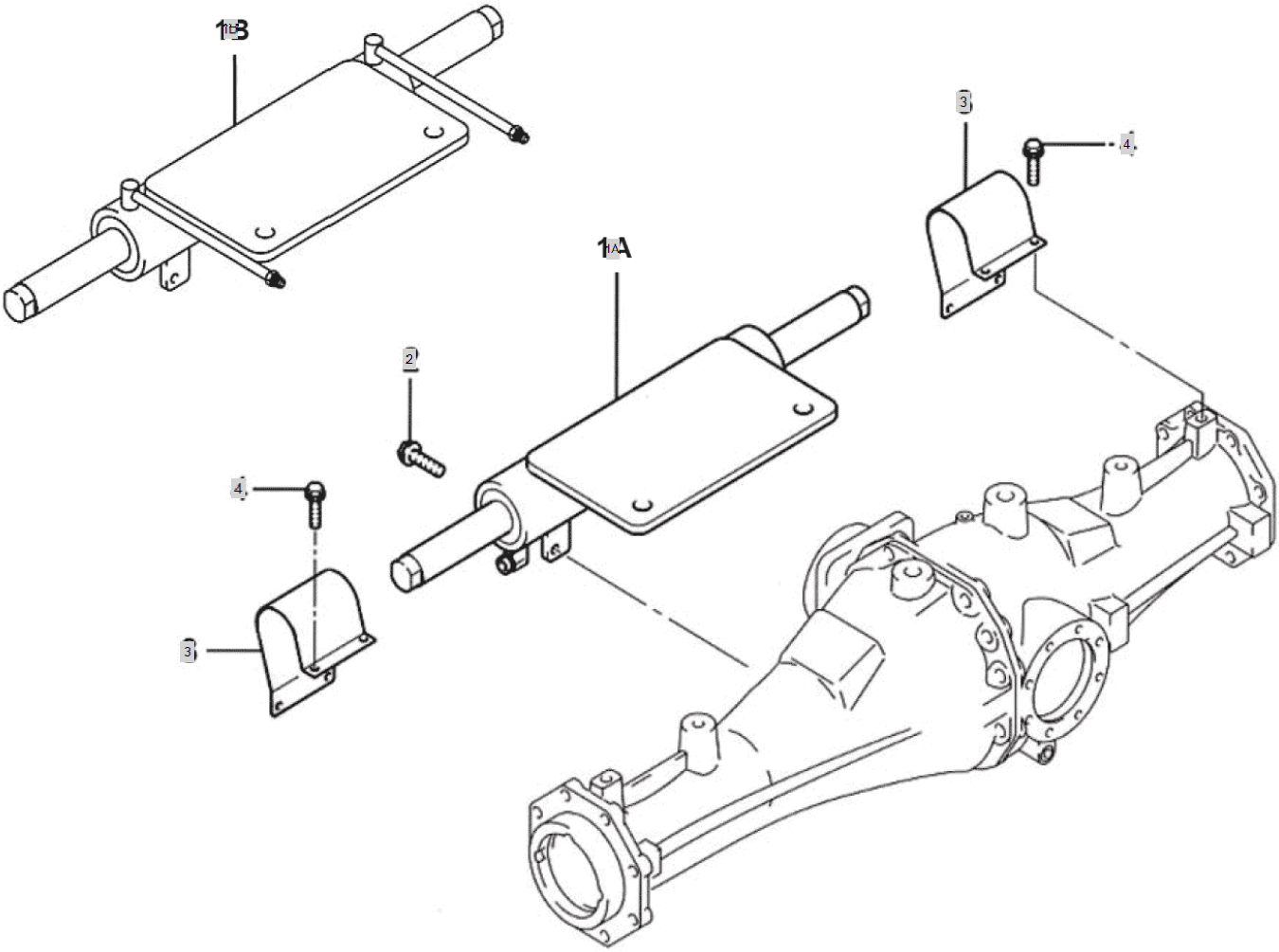

FIG 032 3520	PS CYLINDER	Year/Month 2020/02

KeyNo.	Part Number	Part Name	Quantity	Other
1A	NT32360000C3	PST CYLINDER ASSY	1	
1B	NT32360000C3	PST CYLINDER ASSY	1	
2	26106-120302	HEXFLANGEBOLT	4	
3	NT32350000A3	CYLINDERCOVER	2	
4	26106-080122	Bolt, Hexa (8-12)	8	

FIG 033 3520	PS VALVE	Year/Month 2020/02

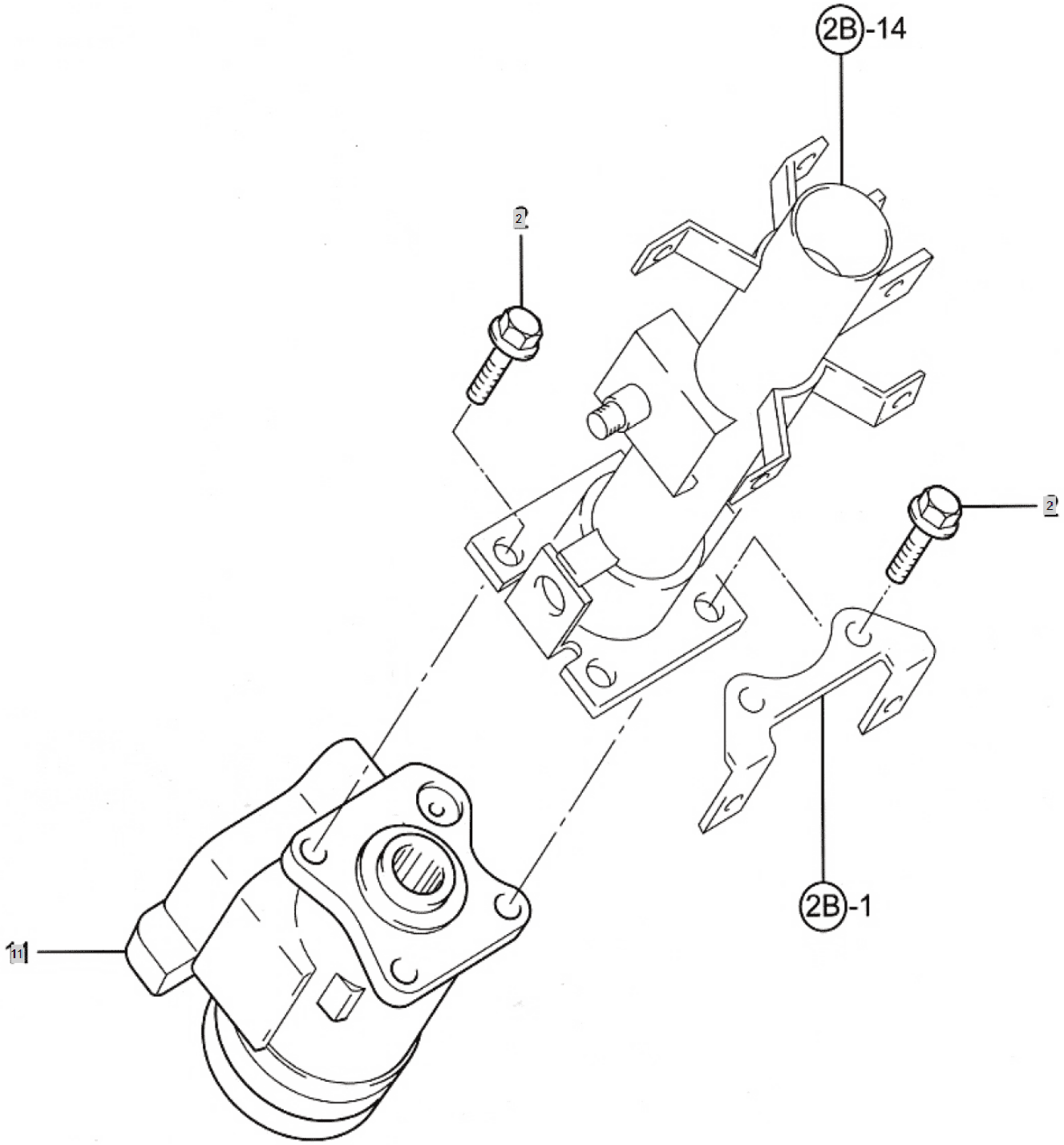

FIG 033 3520	PS VALVE	Year/Month 2020/02

KeyNo.	Part Number	Part Name	Quantity	Other
2	26136-100252	SCREW, HEX FLANGE HEAD CAP	3	
11	NT33010000A3	P.S.TVALVE	1	

FIG 034 3520	PS PIPES	Year/Month 2020/02

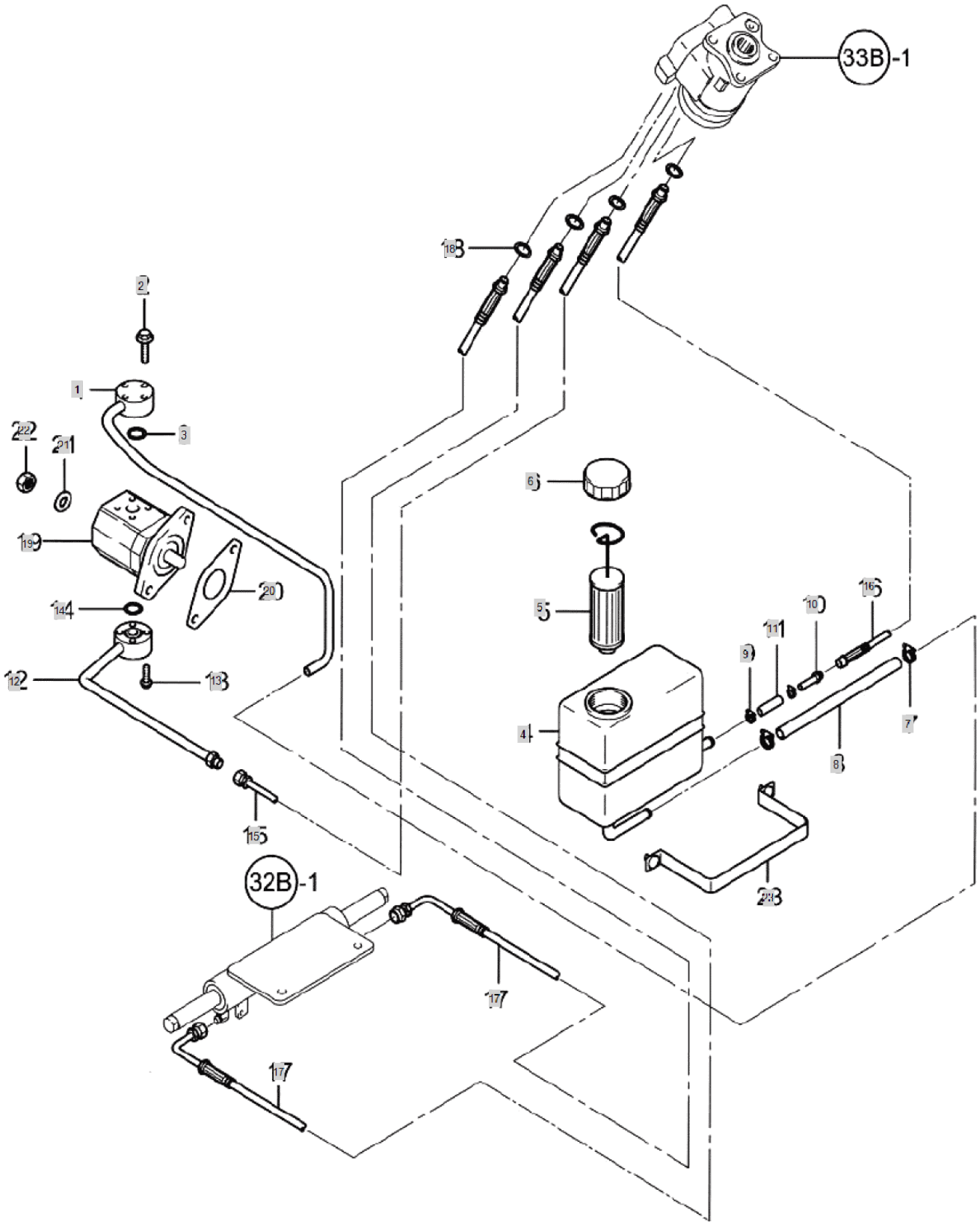

FIG 034 3520	PS PIPES	Year/Month 2020/02

KeyNo.	Part Number	Part Name	Quantity	Other
1	NT34010000A2	PSTPIPE,LOWERPRESSURE	1	
2	26106-060352	FLANGEBOLT	4	
3	24311-000200	O-RING, DYNAMIC (Φ20)	1	
4	TA00019101A	PST TANK ASS'Y	1	
5	NT35030000A3	STRAINER	1	
6	NTE1170000A3	CAP,FUELTANK	1	
7	23000-025000	CLAMP,HOSE	2	
8	NT34190000A4	RUBBERHOSE,SUCTION	1	
9	23000-022000	CLAMP,HOSE	2	
10	NT34070000A4	PIPE,CONNECTINGRETURN	1	
11	NT34130000A4	RETURNRUBBERHOSE	1	
12	NT34060000A2	PIPEASS`Y,PST	1	
13	26106-060302	Bolt, Hexa (6-30)	4	
14	24311-000200	O-RING, DYNAMIC (Φ20)	1	
15	NT34520000A3	PSTPIPE,HIGHERPRESSURE	1	
16	NT34080000A3	HYD.HOSE,PSTRETURN	1	
17	NT34090000A3	HOSE,STEERING	1	
18	24311-000090	O-RING, DYNAMIC (Φ9)	4	
19	NT34150000A3	HYD.PUMP7CC	1	
20	TZG1700000A4	PACKING	1	
21	22217-080000	WASHER, SPRING (Φ 08)	2	
22	26716-080002	NUT,HEX (D8)	2	
23	NT35130000A3	CLAMPASS`Y	1	

FIG 036 3520	CLUTCH HOUSING	Year/Month 2020/02

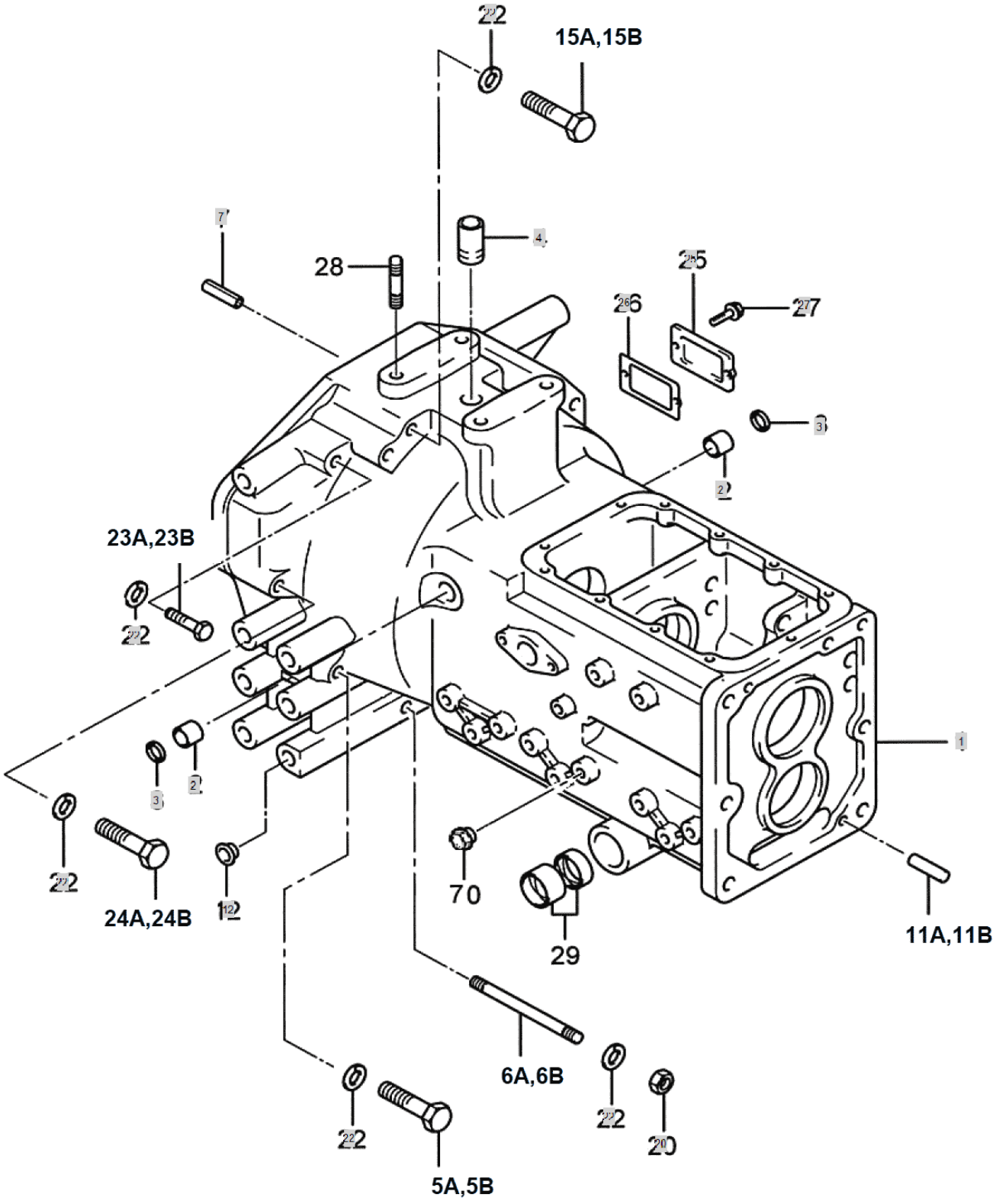

FIG 036 3520	CLUTCH HOUSING	Year/Month 2020/02

KeyNo.	Part Number	Part Name	Quantity	Other
1	NT36010000A0	CLUTCHHOUSING	1	
2	TT36020000A4	BUSH20X26X22	2	
3	TT36030000A4	SEAL20X26X4	2	
4	TT36130000B4	PIPEAIR	1	
5	TZ3605H000A3	BOLT	8	
6	TZ3606H000A4	STUDBOLT(M12X150)	2	
7	22351-080018	PIN, SPRING (8-18)	2	
11	22312-100180	PIN, DOWEL (10-18)	2	
12	TTD4300000A4	PLUG15	8	
19	23414-100000	PLAIN WASHER (D10)	1	
20	26716-120002	BOLT,CYLINDER HEAD(B)	2	
21	23887-100002	SCREW,HEXAGONHEADCAP	1	
22	22217-120000	WASHER, SPRING (Φ 12)	11	
23	26116-120922	BOLT	2	
25	TZ36250000A4	COVER,CLUTCHADJUST	1	
26	TZ36260000A4	PACKING	1	
27	26013-080202	Bolt, Hexa (8-20)	2	

FIG 038-1 3520	CLUTCH ASS'Y DUAL STAGE CLUTCH	Year/Month 2020/02

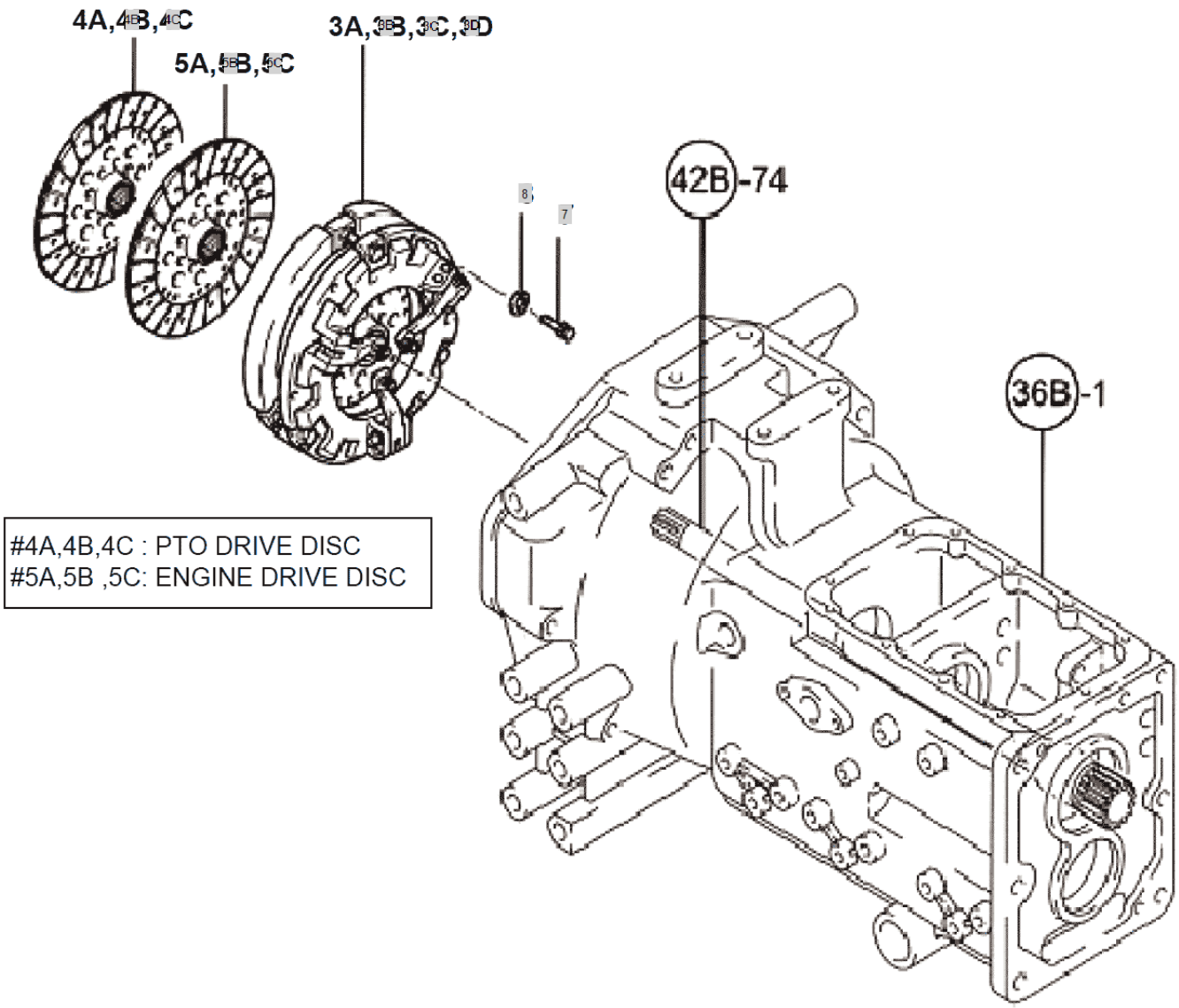

FIG 038-1 3520	CLUTCH ASS'Y DUAL STAGE CLUTCH	Year/Month 2020/02

KeyNo.	Part Number	Part Name	Quantity	Other
3B	TZ38010000A1	CLUTCHASS'Y	1	
3C	TZ38010000-R	CLUTCH ASS'Y - REBULIT	1	
3D	TZ38010000CB	CERAMIC BUTTON REMAN CL.(Pres Plate w/ drve Disk)	1	
4B	TZ38010011A3		1	
4C	TZ38010011-R	CLUTCH DISC ASS'Y (PTO) - REBUILT	1	
5B	TZ38010021A3	TRACTIONCLUTCHDISK	1	
5C	TZ38010021-R	CLUTCH DISC ASS'Y (DRIVE) - REBUILT	1	
7	26116-080852	HEX.BOLT	6	
8	22217-080000	WASHER, SPRING (Φ 08)	6	

FIG 040 3520	CLUTCH RELEASE	Year/Month 2020/02

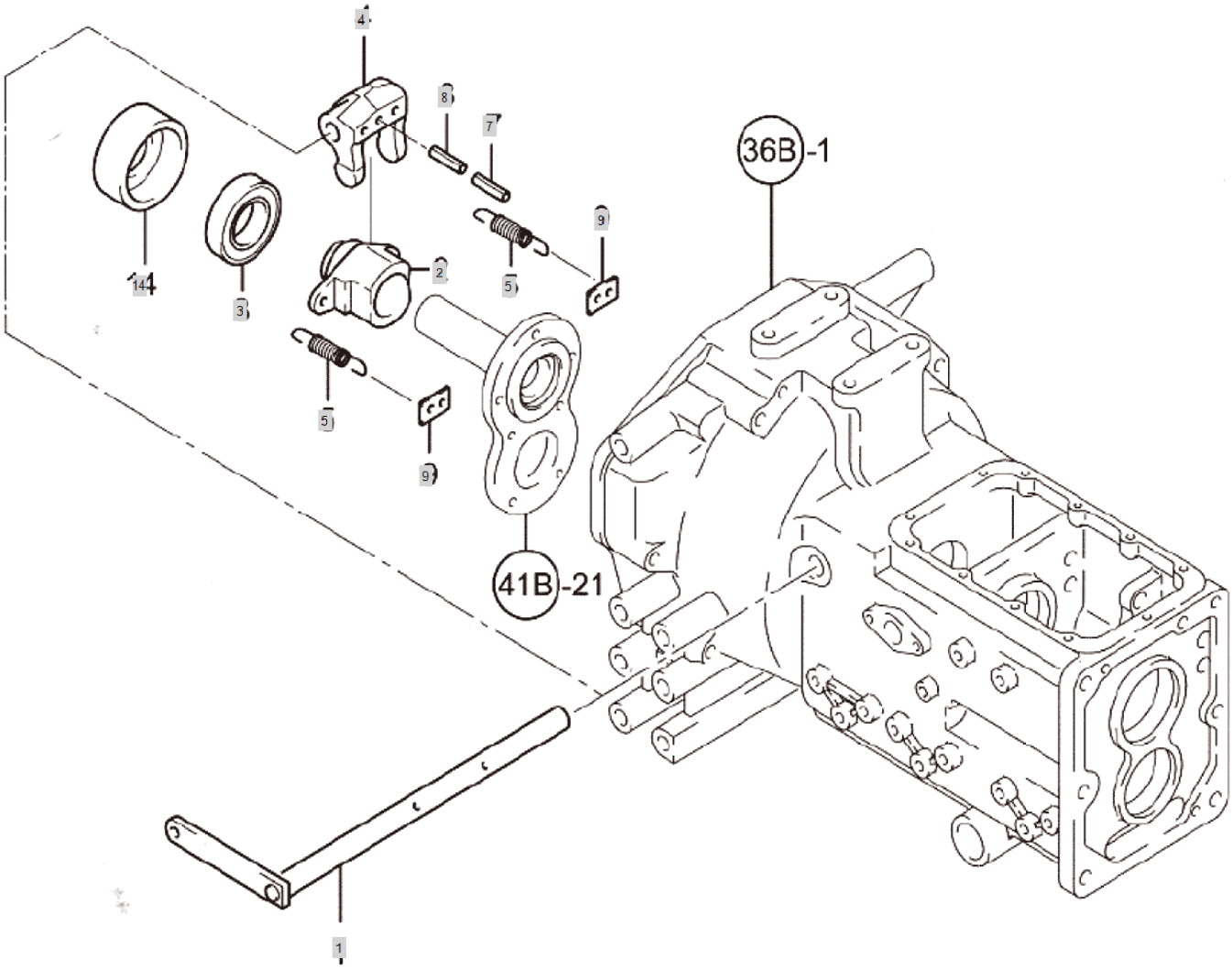

FIG 040 3520	CLUTCH RELEASE	Year/Month 2020/02

KeyNo.	Part Number	Part Name	Quantity	Other
1	NT40010000A3	RELEASESHAFT(MAINCLUTCH)	1	
2	TZ40020000B3	SLEEVE,BEARING	1	
3	NT40150000A4	BALLBEARING	1	
4	TZ40040000E3	YOKE,CLUTCH SHIFT	1	
5	TT40050000A4	SPRINGRETURN	2	
7	22351-050040	PIN, SPRING (5-04)	2	
8	22351-080040	PIN, SPRING (8-40)	2	
9	TN40090000A4	BRACKETSPRING	2	
14	TZ40140000C4	CASE,BEARING	1	

FIG 041 3520	TRANSMISSION CASE SHIFT	Year/Month 2020/02

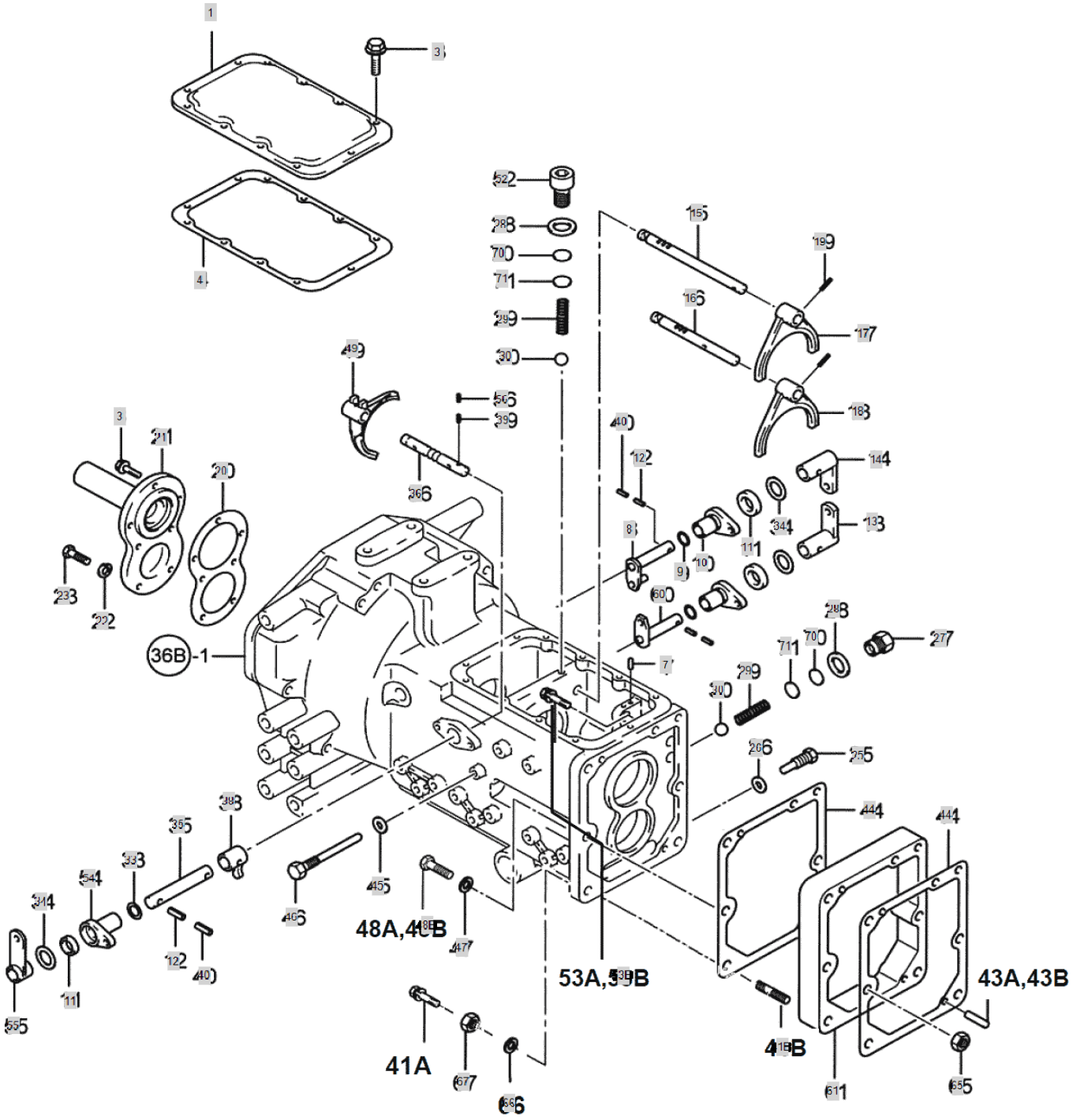

FIG 041 3520	TRANSMISSION CASE SHIFT	Year/Month 2020/02

KeyNo.	Part Number	Part Name	Quantity	Other
1	NT41010000A3	UPPERCOVER,T/M	1	
3	26013-080252	Bolt, Hexa (8-25)	17	
4	NT41040000A3	GASKET	1	
7	TN41070000A4	PIN	1	
8	NT41080000A4	LEVER3-4	1	
9	24311-000210	O-RING, DYNAMIC (Φ21)	3	
10	TN4110000A4	MAIN SHIFT HOLDER	2	
11	24421-173007	Seal, Oil (#17-30-07)	3	
12	22351-080028	PIN, SPRING (8-28)	2	
13	NT41130000A4	ARM[3-4],MAINSHIFT	1	
14	NT41140000A4	ARM(1-2),MAINSHIFT	1	
15	NT41150000A3	FORKSHAFT[3-4],MAINSHIFT	1	
16	NT41160000A3	FORKSHAFT(1-2),MAINAHIFT	1	
17	TN41170000B3	FORK1ST~2ND,MAINSHIFT	1	
18	TN41180000B3	FORK3-4MAINSHAFT	1	
19	22351-060030	PIN, SPRING (6-30)	2	
20	TZ41200000A3	PACKING	1	
21	TZ41210000A2	CASE,OILSEAL	1	
22	22217-080000	WASHER, SPRING (Φ 08)	5	
23	26116-080222	BOLT7T(8X22)	5	
25	TN41250000A4	FIXINGBOLT	1	
26	23414-100000	PLAIN WASHER (D10)	1	
27	NT41270000A4	CAPBOLT	1	
28	23414-160000	WASHER,SEALING	2	
29	TT42020000A4	SPRING	3	
30	24190-100001	Ball, Steel (5/16)	3	
33	24311-000110	O-RING, DYNAMIC (Φ11)	1	
34	TT65120000A4	COLLARB	3	
35	NT41350000A4	SHAFTSHUTTLECHANGE	1	
36	TN41360000A3	SHAFTSH.FORK	1	
38	NT41380000A4	LEVERSHUTTLESHAFT	1	
39	22351-060025	PIN, SPRING (6-25)	2	
40	22351-050028	PIN, SPRING (5-02)	2	
41B	26216-120952	BOLT	1	
44	TZ41440000A4	PACKING	2	
45	23414-080000	WASHER, PLAIN (Φ8)	1	
46	NT41460000A4	BOLT	1	
47	22217-140000	WASHER, SPRING (Φ 14)	5	
48B	26216-140952	STUD BOLT	5	
49	TN41490000B3	FORK, SHUTTLE SHIFT	1	
52	23871-010000	PLUG	1	
53B	26013-121102	BOLT12X110	1	
54	NT41540000A4	HOLDER,SHUTTLESHIFT	1	
55	NT41550000A4	LINKC,SHUTTLE	2	
56	22351-080028	PIN, SPRING (8-28)	1	

FIG 041 3520	TRANSMISSION CASE SHIFT	Year/Month 2020/02

KeyNo.	Part Number	Part Name	Quantity	Other
60	NT41600000A4	LEVER[1ST-2ND],MAINSHIFT	1	
61	NT36200000B3	SPACER,MISSIONCASE	1	
65	26716-140002	NUT	5	
66	22217-120000	WASHER, SPRING (Φ 12)	1	
67	26716-120002	BOLT,CYLINDER HEAD(B)	1	
70	TN41540000A4	SHIM,MAINSHAFT	2	
71	TN41550000A4	SHIM,MAIN(1.2T)	4	

FIG 042 3520	MAIN REVERSER GEAR	Year/Month 2020/02

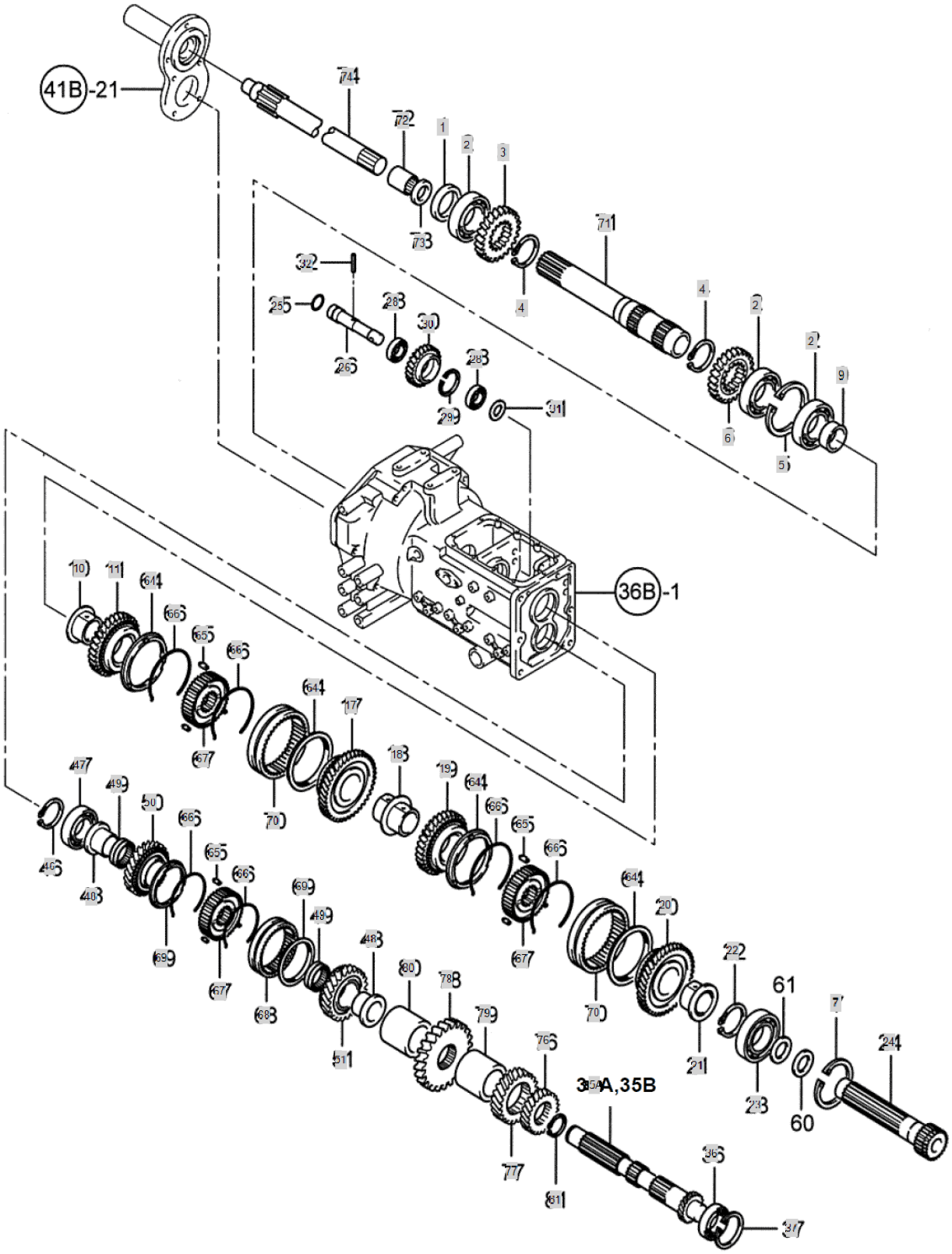

FIG 042 3520	MAIN REVERSER GEAR	Year/Month 2020/02

KeyNo.	Part Number	Part Name	Quantity	Other
1	24411-385509	OILSEAL	1	
2	24101-062084	Bearing, Ball (#6208)	3	
3	TN42030000A3	GEARREVERSER26T	1	
4	22242-000450	SNAP RING, SHAFT (Φ 45)	2	
5	22252-000800	RING, CIRCLIP (Φ 80)	2	
6	TN42060000A3	GEAR,FORWARD	1	
7	22252-000800	RING, CIRCLIP (Φ 80)	1	
9	TN42090000B4	BUSH	1	
10	TN42100000B4	BUSHA,GUIDE	1	
11	TN42110000B3	GEAR,32T4TH	1	
17	TN4217000B3	GEAR 37T, THE 3RD	1	
18	TN42180000B4	HUSHB,GUIDE	1	
19	TN42190000B3	GEAR41T,2ND	1	
20	TN42200000B3	GEAR43T,1ST	1	
21	TN42210000B4	BUSHC	1	
22	22292-000350	RING, CIRCLIP (Φ 35)	1	
23	24111-063074	BEARING	1	
24	NT42240000B3	GUIDESHAFT,MAIMSHIFT	1	
25	24311-000200	O-RING, DYNAMIC (Φ20)	1	
26	TN42260000A3	IDLE SHAFT, REVERSE	1	
28	24101-060044	Bearing, Ball (#6004)	2	
29	22252-000420	RING, CIRCLIP (Φ 42)	1	
30	TN42300000A3	REVERSERGEARIDLE	1	
31	TN42310000B4	COLLAR	1	
32	22351-060030	PIN, SPRING (6-30)	1	
35A	NT42350000A2	COUNTERSHAFTA'SSY	1	
36	24111-063064	BALLBEARING6306	1	
37	22252-000720	RING, CIRCLIP (Φ 72)	1	
46	22242-000300	SNAP RING, SHAFT (Φ 30)	1	
47	24101-063064	Bearing, Ball (#6306)	1	
48	TN42480000A4	BUSH D, GUIDE	2	
49	24161-404527	NEEDLEBEARING	2	
50	TN42500000E3	REVERSE GEAR 30T	1	
51	TN42510000E3	GEAR, FORWARD 32T	1	
64	TN42640000A2	RING, SYNCHRO.	4	
65	TN42650000A9	PIECE	9	
66	TN42660000A9	SPRING	6	
67	TN42670000A3	HUB	3	
68	TN42680000A9	SLEEVE	1	
69	TN42690000A9	SYNCHRO.RINGASS'Y	2	
70	TN42700000A2	SLEEVE	2	
71	NT42710000B3	MAINSHAFT,OUTER	1	
72	24550-020120	DRYBUSH	1	
73	24413-203007	Seal, Oil (#20-30-07)	1	
74	TZ4274Y000A3	MAINSHAFT,INNER	1	

FIG 042 3520	MAIN REVERSER GEAR	Year/Month 2020/02

KeyNo.	Part Number	Part Name	Quantity	Other
76	NT42760000A3	GEAR2ND,COUNTER	1	
77	NT42770000A3	GEAR3RD,COUNTER	1	
78	NT42780000A3	GEAR4TH,COUNTER	1	
79	NT42790000A4	SPACER,FRONT	1	
80	NT42800000A4	SPACER,REAR	1	
81	22242-000350	SNAP RING, SHAFT (Φ 35)	1	

FIG 043 3520	FRONT DRIVE & RANGE SHIFT GEAR	Year/Month 2020/02

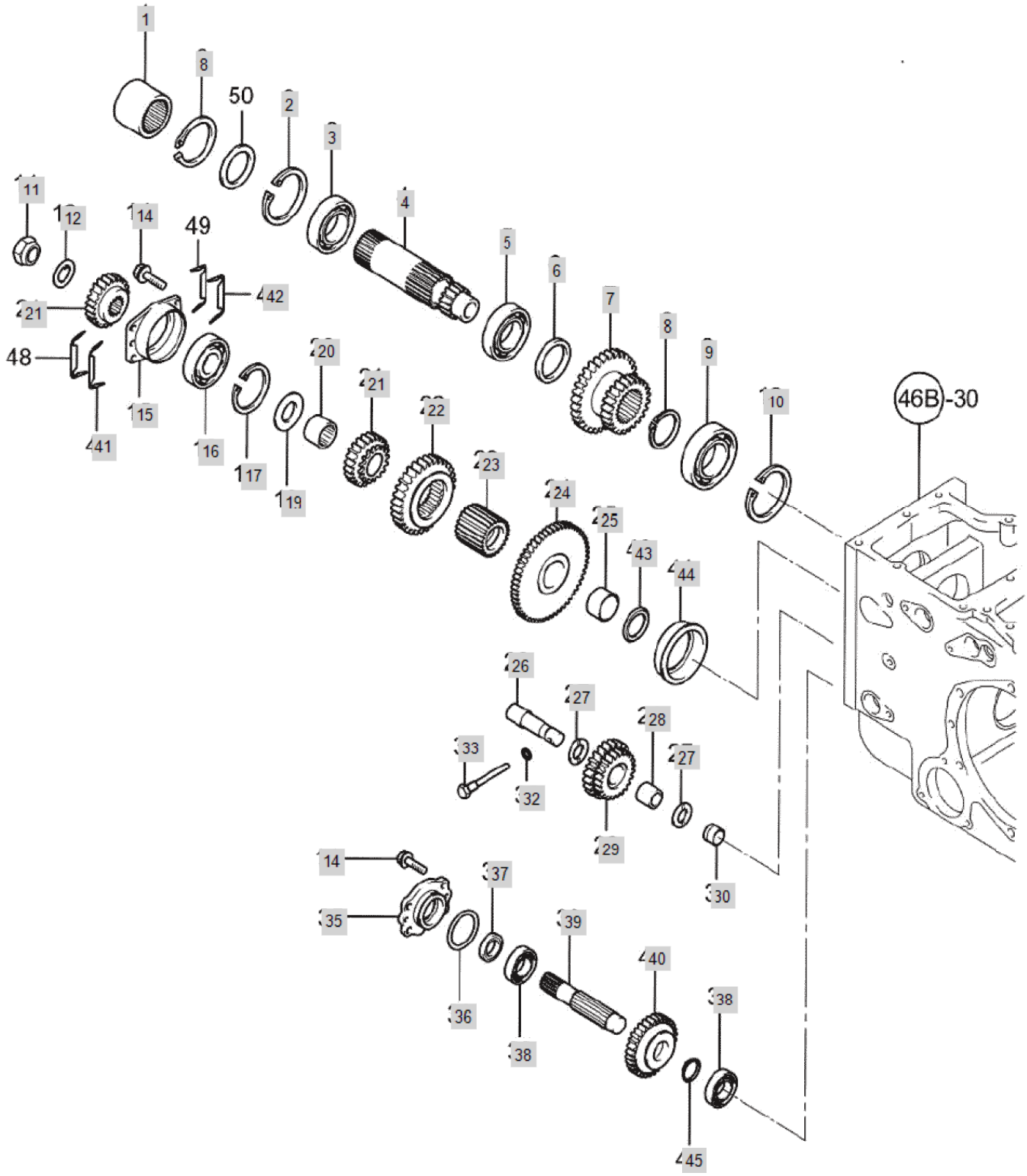

FIG 043 3520	FRONT DRIVE & RANGE SHIFT GEAR	Year/Month 2020/02

KeyNo.	Part Number	Part Name	Quantity	Other
1	NT43010000A3	CONNECTCOLLAR	1	
2	22252-000850	RING, CIRCLIP (Φ 85)	1	
3	24101-060104	Bearing, Ball (#6010)	1	
4	NT43040000A3	GEAR46T, RANGE SHIFT	1	
5	24101-060104	Bearing, Ball (#6010)	1	
6	NT43060000A4	COLLAR	1	
7	TN43070000A3	GEAR2ND3RDRANGESHIFT	1	
8	22242-000500	SNAP RING, SHAFT (Φ50)	2	
9	24101-063074	Bearing, Ball (#6307)	1	
10	22252-000800	RING, CIRCLIP (Φ 80)	1	
11	TN43110000A4	LOCKNUT	1	
12	TT57020000A4	WASHER	1	
13	TN43130000A3	GEAR25FRONTDRIVE	1	
14	26013-080202	Bolt, Hexa (8-20)	8	
15	TN43150000A3	CASEBEARING	1	
16	24101-063064	Bearing, Ball (#6306)	1	
17	22252-000720	RING, CIRCLIP (Φ 72)	1	
19	TN43190000A4	THRUSTWASHER	1	
20	24161-323827	Bearing, Neddle (#32-38-27)	1	
21	TA00031460A	GEAR16,RANGE SHIFT 3RD	1	
22	TN43220000A3	GEAR 30T,RANGE SHIFT 2ND	1	
23	TN43230000B3	CALLAR	1	
24	TN43240000A3	GEAR56RANGESHIFT1ST	1	
25	TT57080000A4		1	
26	TN43260000A4	SHAFT, FRONT DRIVE IDLE	1	
27	TN43270000A4	THRUSTWASHER	2	
28	24161-202825	NEEDLE BEARIN (#20-28-25)	1	
29	TN43290000A3	GEARFRONTDRUVEIDLE	1	
30	TN43300000A4	COLLAR	1	
32	23414-100000	PLAIN WASHER (D10)	1	
33	TN43330000A4	BOLT	1	
35	TN43350000A3	CASEOILSEAL	1	
36	TN43360000A4	O-RING	1	
37	24421-254008	Seal, Oil (#25-40-08)	1	
38	24101-062054	Bearing, Ball (#6205)	2	
39	TN43390000A3	SHAFTFRONTDRIVELINE	1	
40	TN43400000A3	GEARFRONTDRIVE	1	
41	TN43410000A4	SHIM	1	
42	TN43420000A4	SHIM	1	
43	TT57100000B4	WASHER,THRUST	1	
44	TN43440000A3	COVERBEARING	1	
45	TN43450000A4	COLLAR	1	

FIG 044 3520	FRONT DRIVE, RANGE SHIFT	Year/Month 2020/02

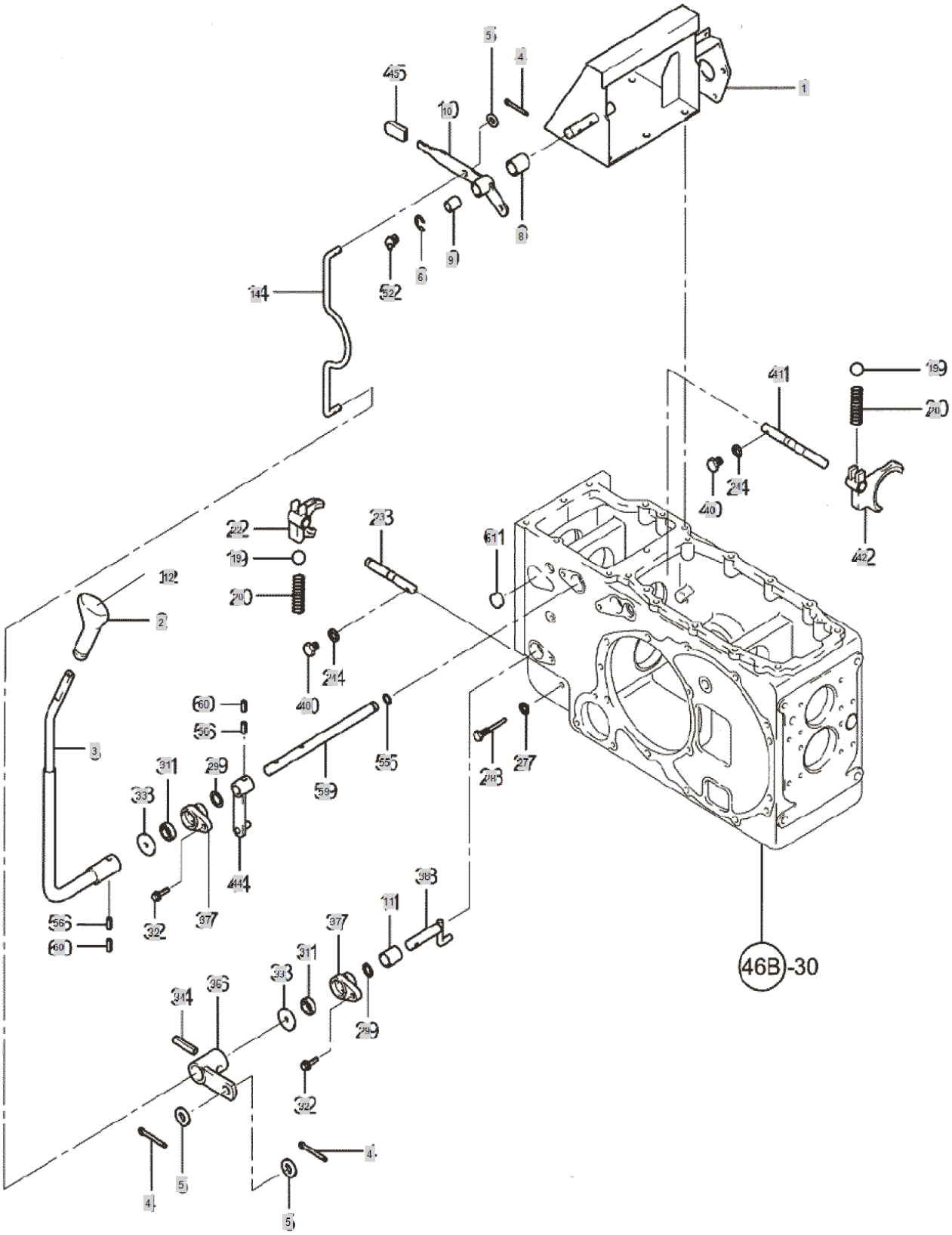

FIG 044 3520	FRONT DRIVE, RANGE SHIFT	Year/Month 2020/02

KeyNo.	Part Number	Part Name	Quantity	Other
1	NT44010000C2		1	
2	FT67200100A2	KNOB,RANGESHIFTLEVER	1	
3	NT44030000B2	LEVER, RANGE LEVER	1	
4	22417-250250	PIN , COTTER (2-25)	4	
5	22137-100000	WASHER, PLAIN (Φ 10)	4	
6	22272-000150	RING, CIRCLIP (Φ 15)	1	
8	TZ44080000A4	BOSSCREEPER	1	
9	TT70080000A4	BUSH	1	
10	NT44100000A3	LEVER,FRONTDRIVE	1	
11	TT70090000A4	BUSH	1	
12	NT69010000A2	CAP,RANGESHIFT	1	
14	NT44140000A4	ROD,FRONTDRIVE	1	
19	24190-100001	Ball, Steel (5/16)	2	
20	TT42020000A4	SPRING	2	
21	24311-000110	O-RING, DYNAMIC (Φ11)	1	
22	TN44220000A3	FORKFRONTDRIVE	1	
23	TN44230000A3	SHAFTFRONTDRIVEFORK	1	
24	23414-080000	WASHER, PLAIN (Φ8)	2	
27	23414-100000	PLAIN WASHER (D10)	1	
28	TN44280000A4	PLUG	1	
29	24321-000250	O-RING	2	
31	24421-173007	Seal, Oil (#17-30-07)	2	
32	26013-080252	Bolt, Hexa (8-25)	2	
33	TT65120000A4	COLLARB	2	
34	22351-080028	PIN, SPRING (8-28)	1	
36	NT44360000A4	LEVER,A'SSYB.FRONTDRIVE	1	
37	TN44370000A4	HOLDERSHIFTARM	2	
38	TN44380000A4	LEVERASS'YF.DRIVE	1	
40	TN44400000A4	BOLT	2	
41	TN44410000B3	SHAFT,RANGESHIFTFORK	1	
42	TN44420000A3	FORKRANGESHIFT	1	
44	TN44440000D4	LEVERASS`Y(B),RANGESHAFT	1	
45	TZ44450000A4	FRONTWDLEVERKNOB	1	
47	TN44470000A4	COLLAR	1	
52	TN44590000A4	GREASENIPPLE	1	
55	TN46180000A4	O-RING	1	
56	22351-080030	PIN, SPRING (8-30)	2	
57	22137-160000	WASHER, PLAIN (Φ 16)	1	
58	26716-160002	NUT	1	
59	TN44520000B3	SHAFT,RANGESHIFTLEVER	1	
60	22351-050030	PIN, SPRING (5-03)	2	
61	TZ44610000A4	PLUG	1	
62	26106-060122	HEX BOLT (6-12)	1	

FIG 045 3520	GEAR, PTO SPEED CHANGE	Year/Month 2020/02

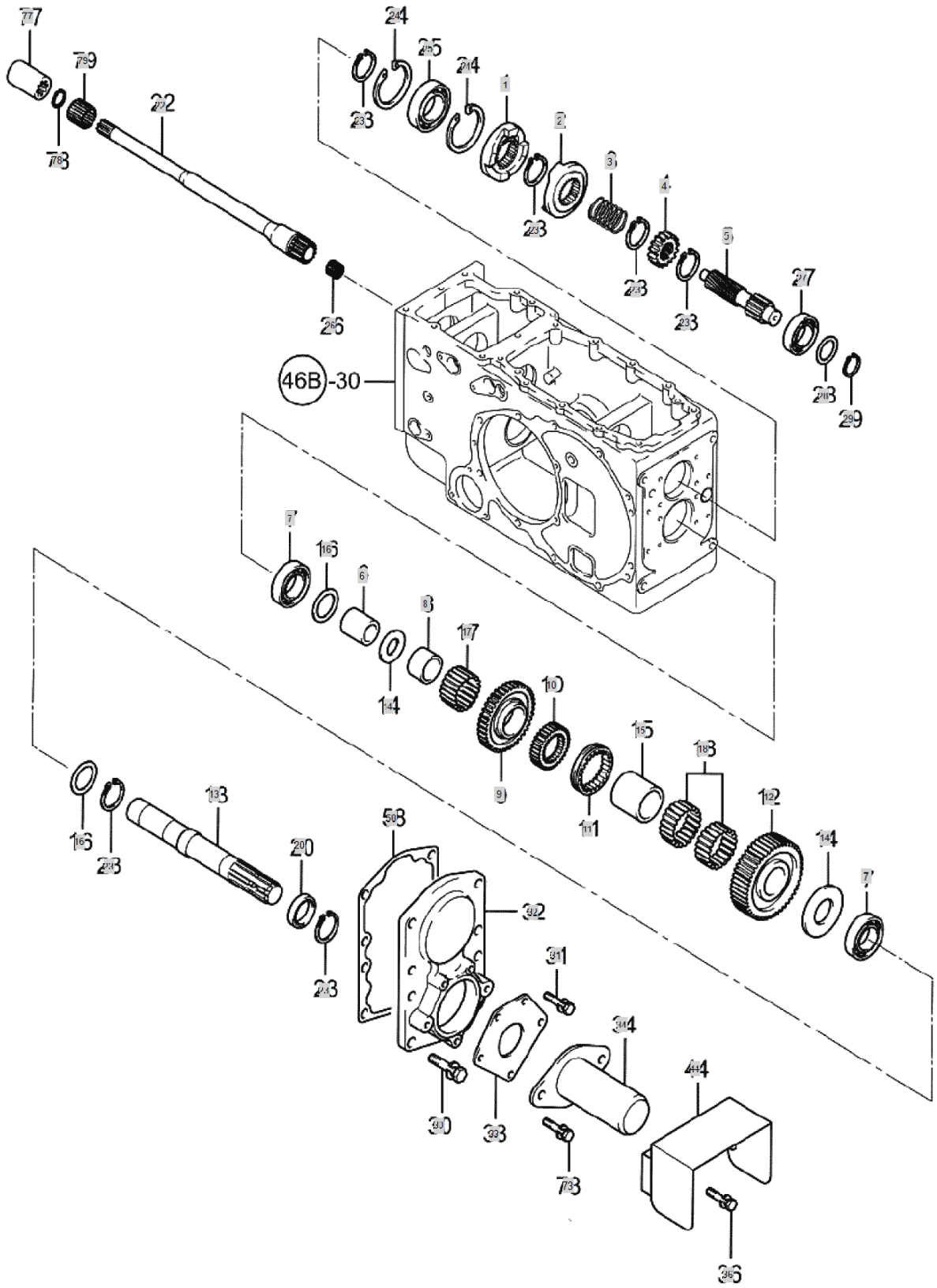

FIG 045 3520	GEAR, PTO SPEED CHANGE	Year/Month 2020/02

KeyNo.	Part Number	Part Name	Quantity	Other
1	TZ45010000A3	CLUTCH1,ONEWAY	1	
2	TZ45020000A3	CLUTCH2,ONEWAY	1	
3	TZ45030000A4	SPRING,ONEWAYCLUTCH	1	
4	TZ45040000A4	GEAR2ND,PTOCHANGE	1	
5	TZ45050000A3	SHAFT,PTOCHANGE	1	
6	TZ45060000A4	SPACER	1	
7	24111-063074	BEARING	2	
8	TZ45080000A4	BUSHA,NEEDLE	1	
9	TZ45090000A3	GEAR2NDP.T.O	1	
10	TZ45100000A3	HUB,P.T.O	1	
11	TZ45110000A4	SLEEVE,P.T.O	1	
12	TZ45120000A3	GEARLST,P.T.O	1	
13	TZ45130000A3	SHAFT,P.T.O	1	
14	TZ45140000A4	COLLAR	1	
15	TZ45150000A4	BUSHB,NEEDLE	1	
16	TN45120000A4	WASHER	1	
17	24161-455328	NEEDLE BEARING (#45-53-28)	1	
18	24161-455320	NEEDLEBEARING	2	
20	TT62040000A3	PTO OIL SEAL QLF35X60X19	1	
22	NT45220000A3	SHAFT,P.T.ODRIVE	1	
23	22242-000350	SNAP RING, SHAFT (Φ 35)	5	
24	22252-000720	RING, CIRCLIP (Φ 72)	2	
25	24101-062074	BALL BEARING (#6207)	1	
26	24161-182420	NEEDLEBEARING	1	
27	24111-063064	BALLBEARING6306	1	
28	TN45520000A4	COLLAR	1	
29	22242-000300	SNAP RING, SHAFT (Φ 30)	1	
30	26013-080202	Bolt, Hexa (8-20)	2	
31	26013-060162	Bolt, Hexa (6-16)	3	
32	TN45320000B2	OILSEALCASE	1	
33	TB29080000A3		1	
34	TT80030000A3	P.T.OCOVER	1	
36	26106-080142	SCREW,HEXFLANGEHEADCAP	4	
44	TZ45440000A3		1	
58	TZ45580000A3	PACKINGOILSEALCASE	1	
73	26106-060162	HEXFLANGEBOLT	2	
77	NT45200000A4	JOINT	1	
78	22252-000190	RING, CIRCLIP (Φ 19)	1	
79	24161-202825	NEEDLE BEARIN (#20-28-25)	1	

FIG 046 3520	REAR AXLE CASE, PTO SHIFT	Year/Month 2020/02

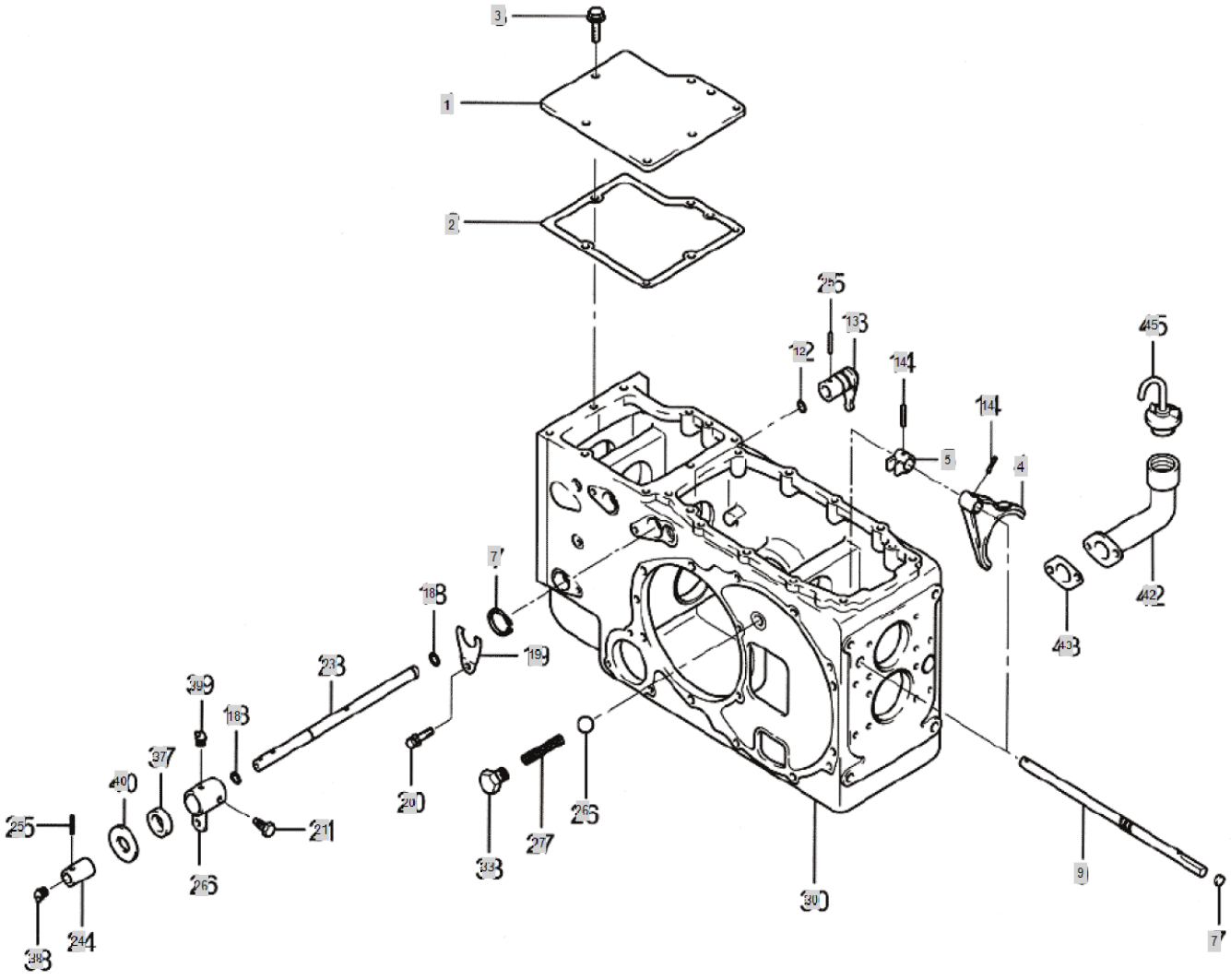

FIG 046 3520	REAR AXLE CASE, PTO SHIFT	Year/Month 2020/02

KeyNo.	Part Number	Part Name	Quantity	Other
1	TN46010000A3	COVER,REALAXLECASE	1	
2	TZ46020000A4	PACKING	1	
3	26013-100322	BOLT	7	
4	TZ46040000B3	FORK,PTOSHAFT	1	
5	TN46050000A4	BOSE1-2,PTOSHAFT	1	
7	27260-150000	Cap, Seal (d=15mm)	2	
9	TZ46090000A3	SHAFT1-2,PTOSHAFT	1	
12	24311-000240	O-RING, DYNAMIC (Φ24)	1	
13	TN46130000A4	ARMASSYSHIFT	1	
14	22351-060025	PIN, SPRING (6-25)	2	
17	22242-000300	SNAP RING, SHAFT (Φ 30)	1	
18	TN46180000A4	O-RING	2	
19	TN46190000A4	PLATE	1	
20	26013-080122	Bolt, Hexa (8-12)	1	
21	TN46210000A4	BOLTREAMER	2	
22	TN46220000C4	LEVER,PTOSHIFTER	1	
23	TN46230000D3	SHAFT,PTOSHIFTLEVER	1	
24	TZ46240000A4	COLLAR	1	
25	22351-080030	PIN, SPRING (8-30)	1	
26	24190-100001	Ball, Steel (5/16)	1	
27	TT42020000A4	SPRING	1	
30	NT46410000A0	HOUSING,REARAXLE.	1	
33	TN46330000A4	BOLT	1	
34	TB28120000C4	DRAIN PLUG	1	
35	24311-000160	O-RING, DYNAMIC (Φ16)	1	
37	22421-173007	OILSEAL(TC)	1	
38	TN46380000A4	GREASENIPPLE	1	
39	TA27160000A4	GREASE NIPPLE	1	
40	TT65120000A4	COLLARB	1	
42	NT46420000B3	OILINTAKEASS'Y	1	
43	NT46430000A4	PACKING,OILINTAKE	1	
44	26013-080202	Bolt, Hexa (8-20)	2	
45	FT80370000A4	CAP,INTAKE	1	

FIG 047 3520	LEVER ASS'Y, PTO SPEED CHANGE	Year/Month 2020/02

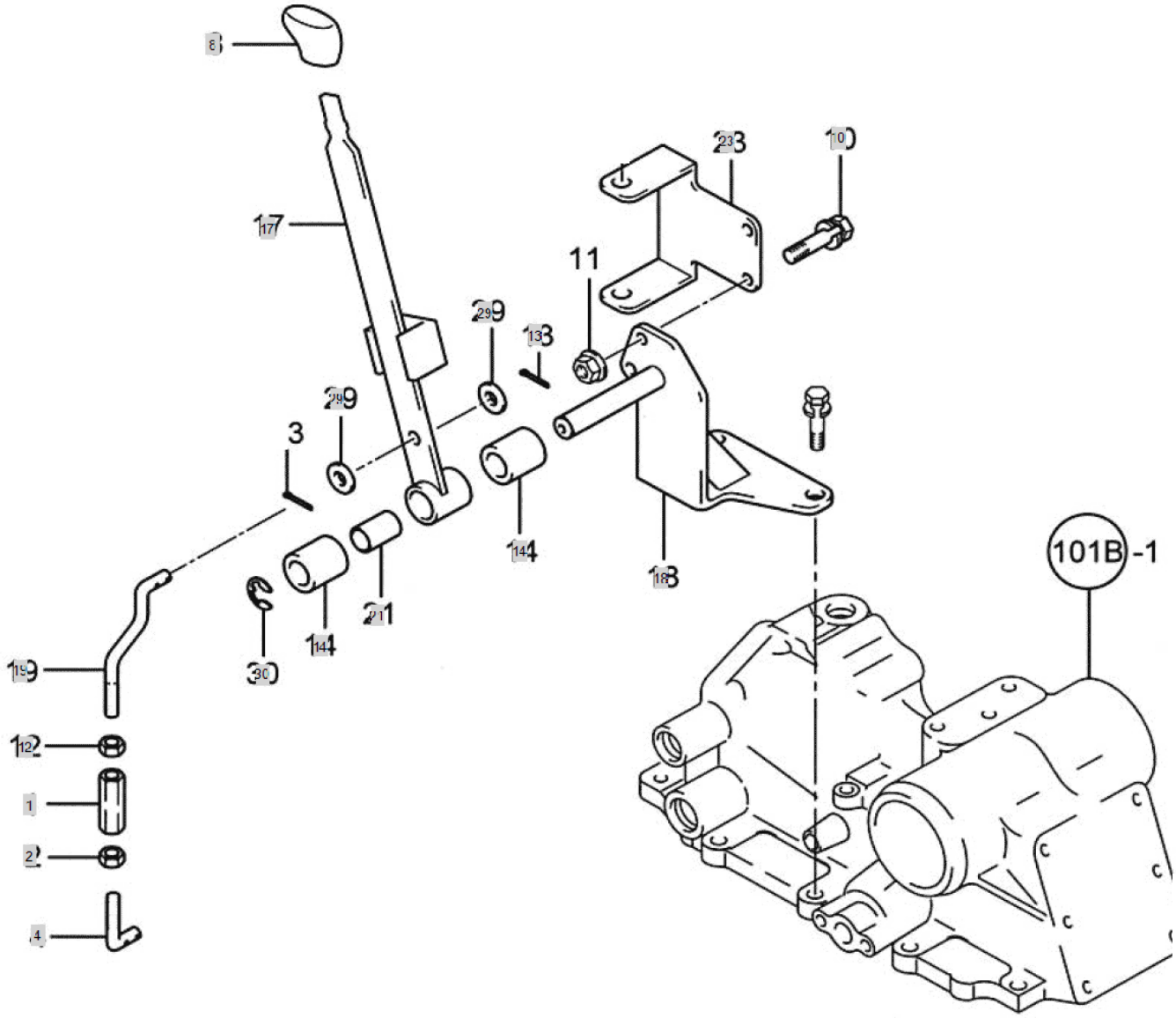

FIG 047 3520	LEVER ASS'Y, PTO SPEED CHANGE	Year/Month 2020/02

KeyNo.	Part Number	Part Name	Quantity	Other
1	TT71010000A4	ADJUST	1	
2	TT71020000A4	NUT (LH)	1	
4	TN47040000A4	ROD, PTO SHIFT	1	
8	TC99140000A3	KNOB(PTO)	1	
10	26013-080122	Bolt, Hexa (8-12)	2	
12	26756-100002	FIXEDNUT	1	
13	22417-250250	PIN , COTTER (2-25)	4	
14	TZ47140000A4	COLLAR	2	
17	TZ47170000A3	LEVER,PTOCHANGE	1	
18	NT47180000A2	SHAFT,P.T.OSHIFTLEVER	1	
19	NT47190000A4	ROD,P.T.O	1	
21	TT70080000A4	BUSH	1	
23	TZ47230000B3	BRACKET,SAFETYSWITCH	1	
29	22137-100000	WASHER, PLAIN (Φ 10)	4	
30	22272-000150	RING, CIRCLIP (Φ 15)	1	
31	TN44590000A4	GREASENIPPLE	1	

FIG 048 3520	HOUSING, REAR AXLE	Year/Month 2020/02

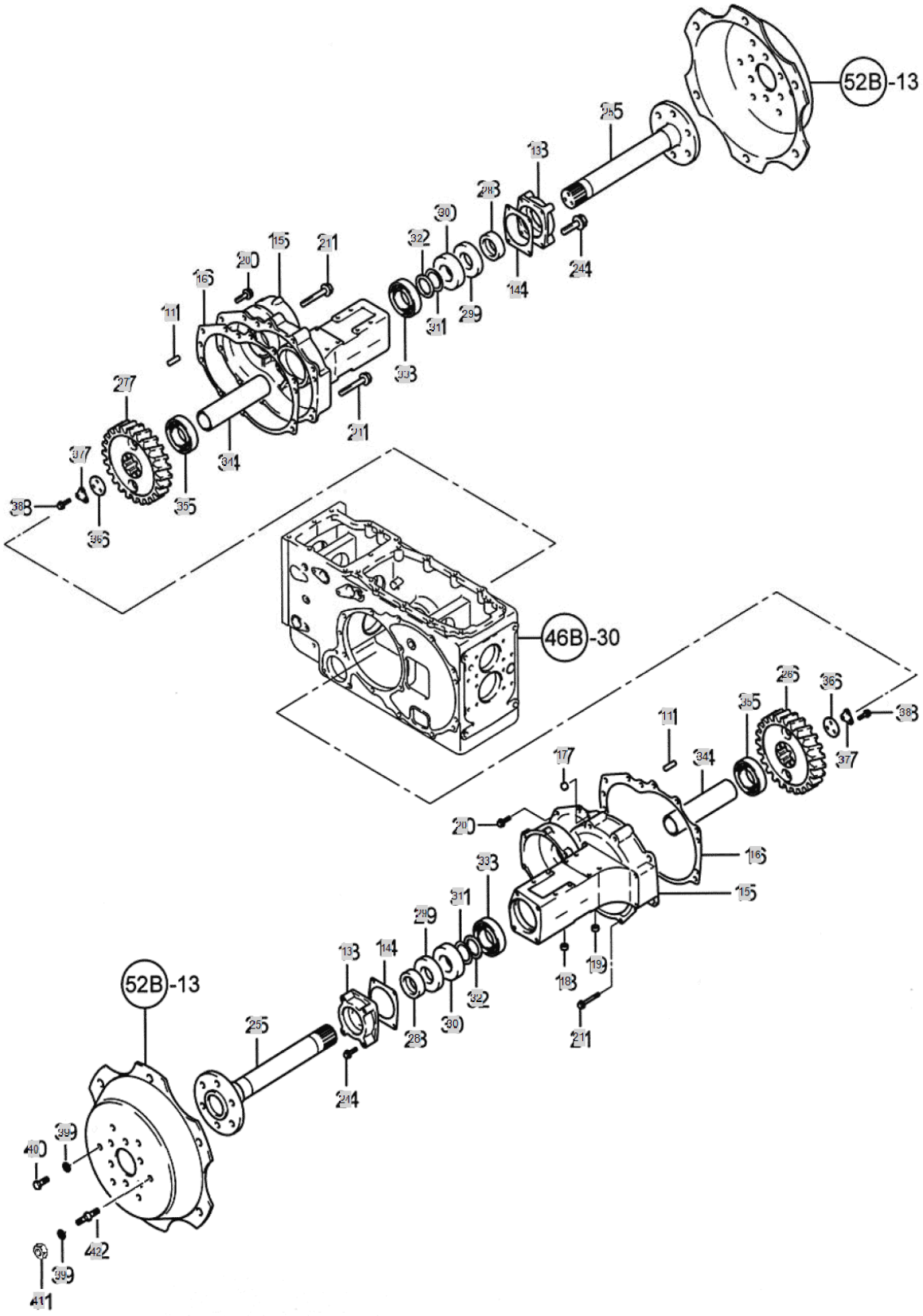

FIG 048 3520	HOUSING, REAR AXLE	Year/Month 2020/02

KeyNo.	Part Number	Part Name	Quantity	Other
11	22312-100180	PIN, DOWEL (10-18)	4	
13	TB29130000A3	CASEOILSEAL	2	
14	TZ48140000A4	PACKING,OILSEALCASE	2	
15	TN48150000D0	REAR AXLE HOUSING(R)	2	
16	TZ48160000A3	PACKING, HOUSING	2	
17	TB29170000A4	PLUG9.5	4	
18	TB26070000A4	PLUG11	6	
19	TB18040000A4	PLUG13	2	
20	26013-120302	HEX BOLT W/WASHER	8	
21	26013-120852	BOLT	12	
24	26013-100552	Bolt, Hexa (10-55)	8	
25	TN48250000A2	SHAFT	2	
26	TN48260000A3	GEARLHREARAXLE	2	
27	TN48270000A3	GEAR(R),REARAXLE.	2	
28	TN48280000A4	BUSH	2	
29	TB29290000A4	OILSEALVC75X100X7	2	
30	TT82070000A3	OILSEAL	2	
31	24321-000600	SEAL,ORING	2	
32	TT85100000A4	O-RING.SPACER	2	
33	24101-062124	Bearing, Ball (#6212)	2	
34	TB29340000A4	SPACER	2	
35	24101-063124	Bearing, Ball (#6312)	2	
36	TB29360000A4	WASHER	2	
37	TB29370000A4	WASHER	2	
38	26013-100322	BOLT	6	
39	TB29430000A4	WASHER	16	
40	TB29440000A4	BOLTM14X35	12	
41	TB29420000A4	NUT M14	4	
42	TT85150000A4	Bolt	4	

FIG 049 3520	DRIVING PART, REAR AXLE	Year/Month 2020/02

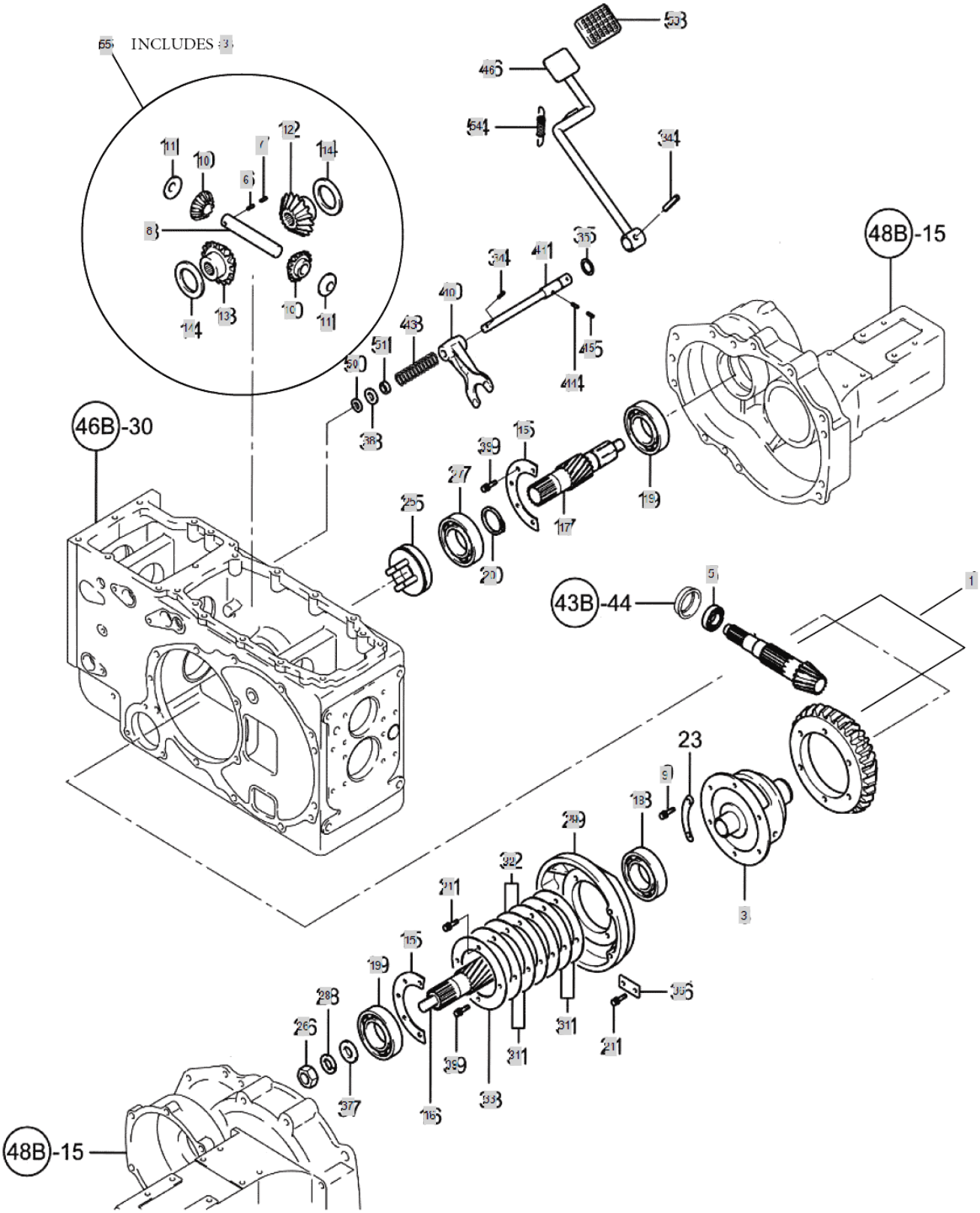

FIG 049 3520	DRIVING PART, REAR AXLE	Year/Month 2020/02

KeyNo.	Part Number	Part Name	Quantity	Other
1	TN49500000C9	RING GEAR ASSY	1	
3	TN49030000D2	CASE,DIFFERENTIAL -> TA00022799A	1	
5	TN49050000A3	BALLBEARING	1	
6	22312-060360	PIN, DOWEL (6-36)	1	
7	22351-060032	PIN, SPRING (6-32)	1	
8	TF64080000A4	PINIONSHAFT	1	
9	TF64090000A4	BOLT	6	
10	TF64100000A3	PINION	2	
11	TF64110000A4	PINIONLINER	2	
12	TF64120000A3	DIFF.SIDEGEAR(A)	1	
13	TF64130000A3	DIFF.SIDEGEAR(B)	1	
14	TF64140000B4	SIDEGEARLINER	1	
15	TB32150000A4	RETAINER	2	
16	TN49160000A3	PINIONL,FINAL	1	
17	TN4917000SA3	PINIONR,FINAL	1	
18	24101-062114	Bearing, Ball (#6211)	1	
19	TF64190000A3	BALL BEARING (#6308HL) -> FGG724	2	
20	22242-000500	SNAP RING, SHAFT (Φ50)	1	
21	26013-080202	Bolt, Hexa (8-20)	8	
25	TF64250000B3	THRUST, DIFF-LOCK ASSY	1	
26	26776-220002	NUT	2	
27	24101-060102	BALL BEARING (#6010)	1	
28	22217-220000	WASHER, SPRING (Φ 22)	2	
29	TN49550000B2	CARRIOR	1	
30	TN49590000A4	RETAINER	1	
31	TZ49560000A4	SHIMA	2	
32	TZ49570000A4	SHIMB	2	
33	TZ49580000A4	SHIMC	2	
34	22351-080032	PIN, SPRING (8-32)	2	
35	24311-000160	O-RING, DYNAMIC (Φ16)	1	
36	TB32360000A4	RETAINER	1	
37	TN49370000A4	WASHER	2	
38	TN49380000A4	WASHER	1	
39	26013-080202	Bolt, Hexa (8-20)	10	
40	TN49400000A2	FORK DIFFERENTIAL LOCK	1	
41	TN49410000B3		1	
43	TN49430000A4	SPRING	1	
44	22351-080040	PIN, SPRING (8-40)	1	
45	22351-050040	PIN, SPRING (5-04)	1	
46	NT49460000A3	PEDAL,DIFFENTIAL	1	
49	TT69090000B4	COLLAR	1	
50	22121-140000	WASHER, PLAIN (Φ 14)	1	
51	24421-152507	Seal, Oil (#15-25-07)	1	
52	22351-060025	PIN, SPRING (6-25)	1	
53	TN01330000A4	RUBBERCOVER	1	

FIG 049 3520	DRIVING PART, REAR AXLE	Year/Month 2020/02

KeyNo.	Part Number	Part Name	Quantity	Other
54	TTB1300000A4	SPRING,RETURN	1	
55	TA00022799A	DIFFERENTIAL CASE ASSY	1	

FIG 050 3520	BRAKE	Year/Month 2020/02

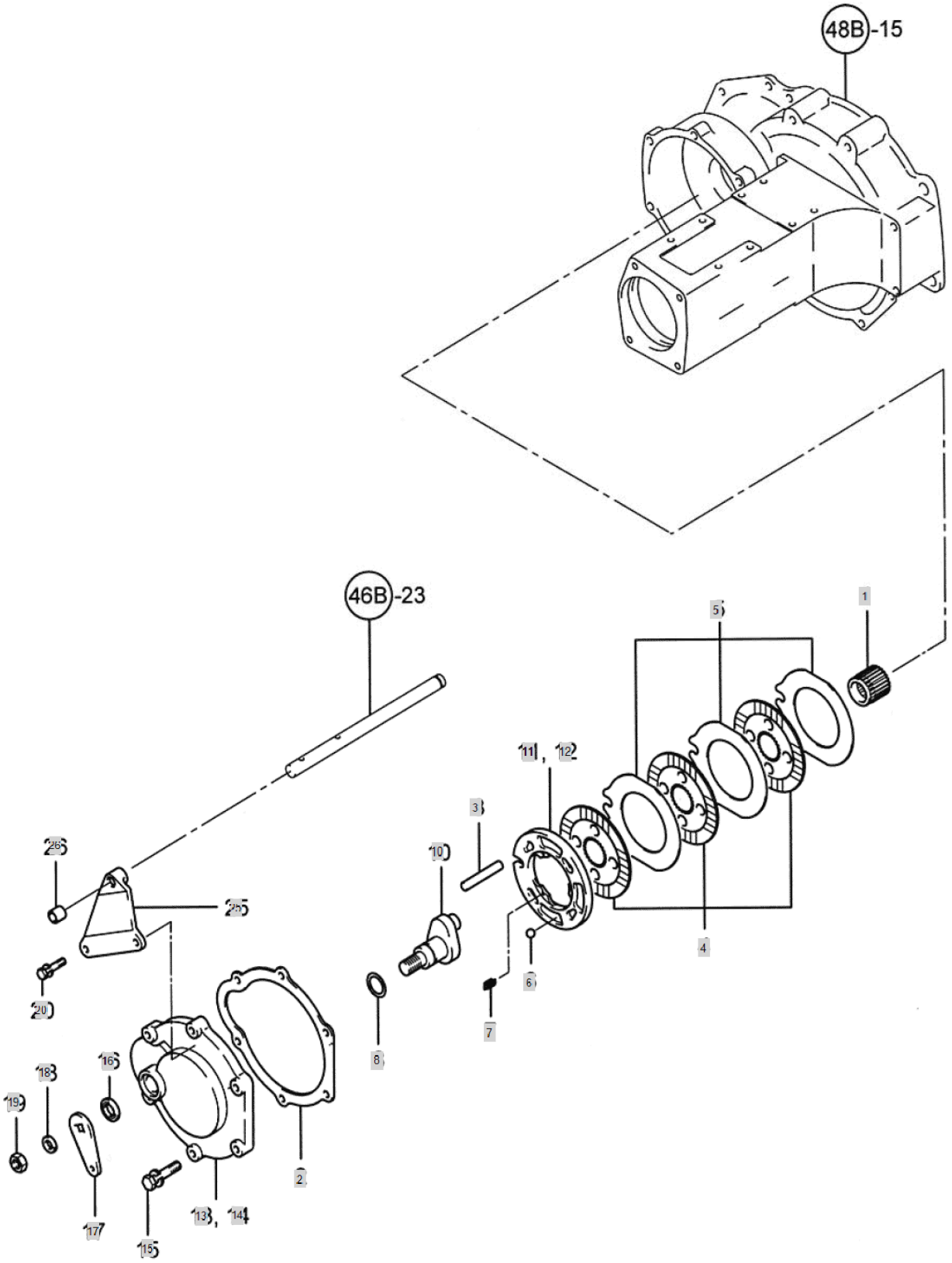

FIG 050 3520	BRAKE	Year/Month 2020/02

KeyNo.	Part Number	Part Name	Quantity	Other
1	TN50010000A3	HUBSPLINE	2	
2	TZ50020000A4	PACKING	2	
3	TN50030000A4	SHAFT	2	
4	TN50040000A2	FRICTIONPLATE	8	
5	TN50050000A2	PLATE	8	
6	24190-200000	BALL5/16STEEL	8	
7	TN50070000A4	SPRING	6	
8	24311-000250	O-RING, DYNAMIC (Φ25)	2	
10	TN50100000B3	CAP	2	
11	TN50110000B2	CAM PLATE(L)	1	
12	TN50120000B2	CAM PLATE (R)	1	
13	TN50130000A1	COVER(L),BRAKE	1	
14	TN50140000A1	COVER(R),BRAKE	1	
15	26013-100402	Bolt, Hexa (10-40)	10	
16	24421-253505	Seal, Oil (#25-35-05)	2	
17	TN50170000A4	LEVER	2	
18	22217-160000	WASHER, SPRING (Φ 16)	2	
19	26736-160002	HEXNUT	2	
20	26013-100502	BOLT,W/SW	2	
25	TN50250000A3	SHAFTHOLDER	1	
26	TB26240000A4	BUSH	1	

FIG 053 3520	BRAKE, CLUTCH PEDAL	Year/Month 2020/02

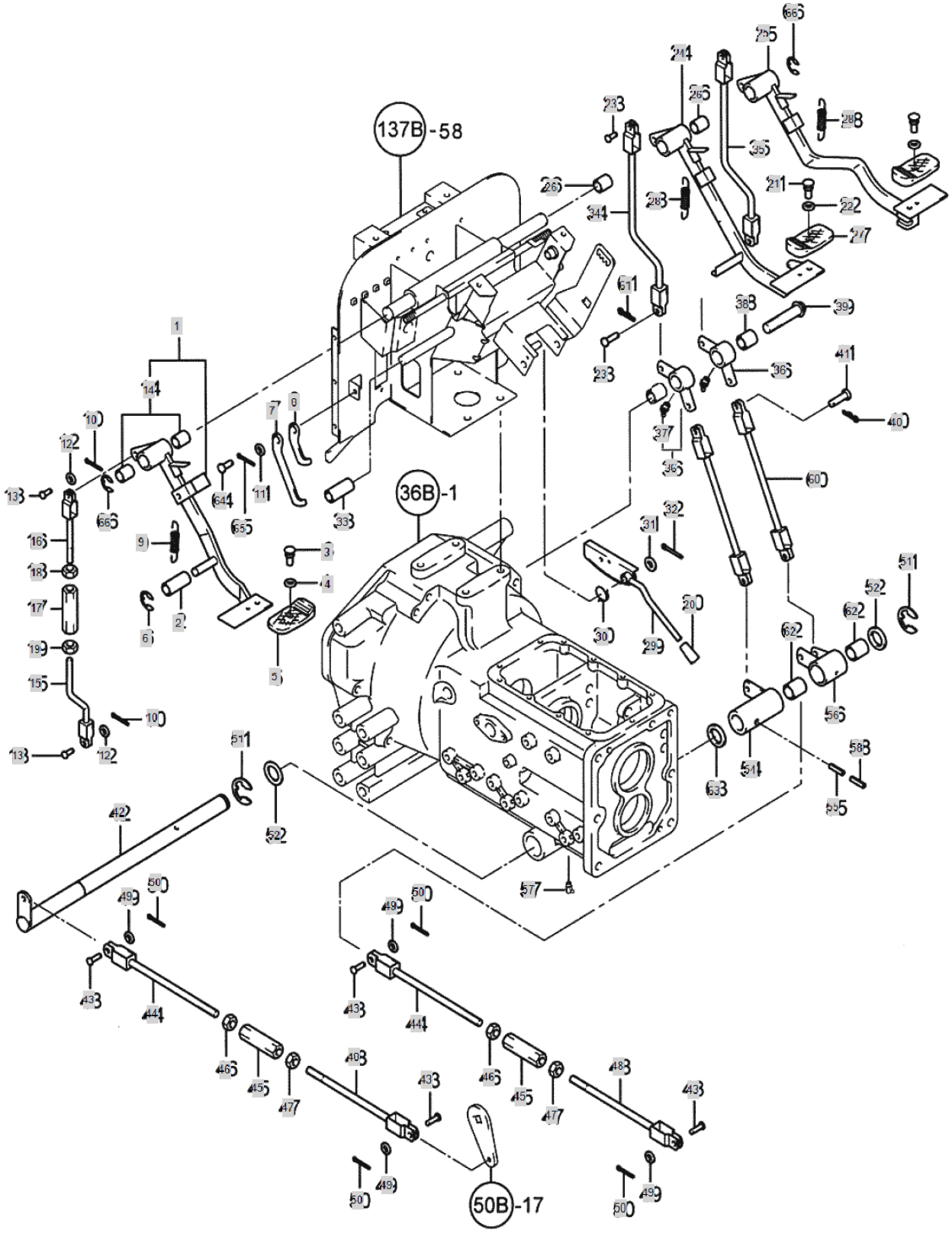

FIG 053 3520	BRAKE, CLUTCH PEDAL	Year/Month 2020/02

KeyNo.	Part Number	Part Name	Quantity	Other
1	NT53010000A2	CLUTCHPEDALASS`Y	1	
2	TC73020000A3	PIPE(CLUTCHSTOPPER)	1	
3	TC73030000A4	RIVET(PEDALHEAD)	1	
4	TC73040000A4	WASHER(REVET)	1	
5	TC73050000A3	PEDALHEADCOVER	1	
6	22272-000120	RING, CIRCLIP (Φ 12)	1	
7	NT53140000A4	LOCK(DRIVING)	1	
8	NT53150000A4	LOCK(PTO)	1	
9	TC73090000A4	RETURN SPRING	1	
10	RR64050000A4	Pin, Come-Off Snap (Φ8)	2	
11	22137-080000	WASHER, PLAIN (Φ 08)	1	
12	22137-100000	WASHER, PLAIN (Φ 10)	2	
13	TT83010000A4	TURN BUCKLE, 10X70	2	
14	TC73010200A4	BUSH25*28*20	2	
15	NT53270000A3	CLUTCHROD(LOWER)	1	
16	NT53550000A3	CLUTCHROD(UPPER)	1	
17	TT67010000A4	TURN BUCKLE	1	
18	26716-120002	BOLT,CYLINDER HEAD(B)	1	
19	TT67040000A4	NUT.LH	1	
20	TB16020000A4	LEVERKNOB	1	
21	TC73030000A4	RIVET(PEDALHEAD)	2	
22	TC73040000A4	WASHER(REVET)	2	
23	TT83010000A4	TURN BUCKLE, 10X70	4	
24	NT53020000A2	BRAKEPEDAL(L)	1	
25	NT53030000A2	BRAKEPEDAL(R)	1	
26	TC73010200A4	BUSH25*28*20	4	
27	TC73050000A3	PEDALHEADCOVER	2	
28	TC73090000A4	RETURN SPRING	2	
29	TCB6120000C2	PARK BRAKE LEVER	1	
30	TCB6130000A4	LOCKSPRING	1	
31	22137-120000	WASHER, PLAIN (Φ 12)	1	
32	22417-250300	PIN , COTTER (2-30)	1	
33	TCB6300000A3	PIPE	2	
34	NT53050000A3	BRAKEROD,FRONT(L)	1	
35	NT53040000A3	BRAKEROD,FRONT(R)	1	
36	NT53090000B3	ARM	2	
37	24764-060000	GREASE NIPPLE	2	
38	TCB6240000A4	SPACER20/29	2	
39	NT53120000A4	FLANGEBOLT20	1	
40	RR64050000A4	Pin, Come-Off Snap (Φ8)	4	
41	TT83010000A4	TURN BUCKLE, 10X70	4	
42	TZ53320000A3	SHAFT,PEDALROD	1	
43	TT41090000A4	PIN10X23	4	
44	NT53250000B4		2	
45	TT67010000A4	TURN BUCKLE	2	

FIG 053 3520	BRAKE, CLUTCH PEDAL	Year/Month 2020/02

KeyNo.	Part Number	Part Name	Quantity	Other
46	26716-120002	BOLT,CYLINDER HEAD(B)	2	
47	TT67040000A4	NUT.LH	2	
48	TN53240000A4	ROD(L)	2	
49	22317-100000	PLAIN WASHER	4	
50	22417-200300	PIN , COTTER (2-30)	4	
51	22271-000240		2	
52	TB35120000B4	WASHER B	2	
54	NT53110000A3	BRAKELINK(L)REAR	1	
55	22351-080050	PIN, SPRING (8-50)	1	
56	NT53100000B3	BRAKELINK(R)REAR	1	
57	TA27160000A4	GREASE NIPPLE	3	
58	22351-050050	PIN, SPRING (5-05)	1	
60	NT53060000A3	BRAKEROD(M)	2	
61	RR64050000A4	Pin, Come-Off Snap (Φ8)	4	
62	TB26240000A4	BUSH	2	
63	TB35110000A4	WASHERA	1	
64	22487-080120	PIN, HEAD (08-12)	1	
65	22417-160200	PIN , COTTER (1-20)	1	
66	22272-000190	RING, CIRCLIP (Φ 19)	2	

FIG 067 3520	LEVER, MAIN SHIFT	Year/Month 2020/02

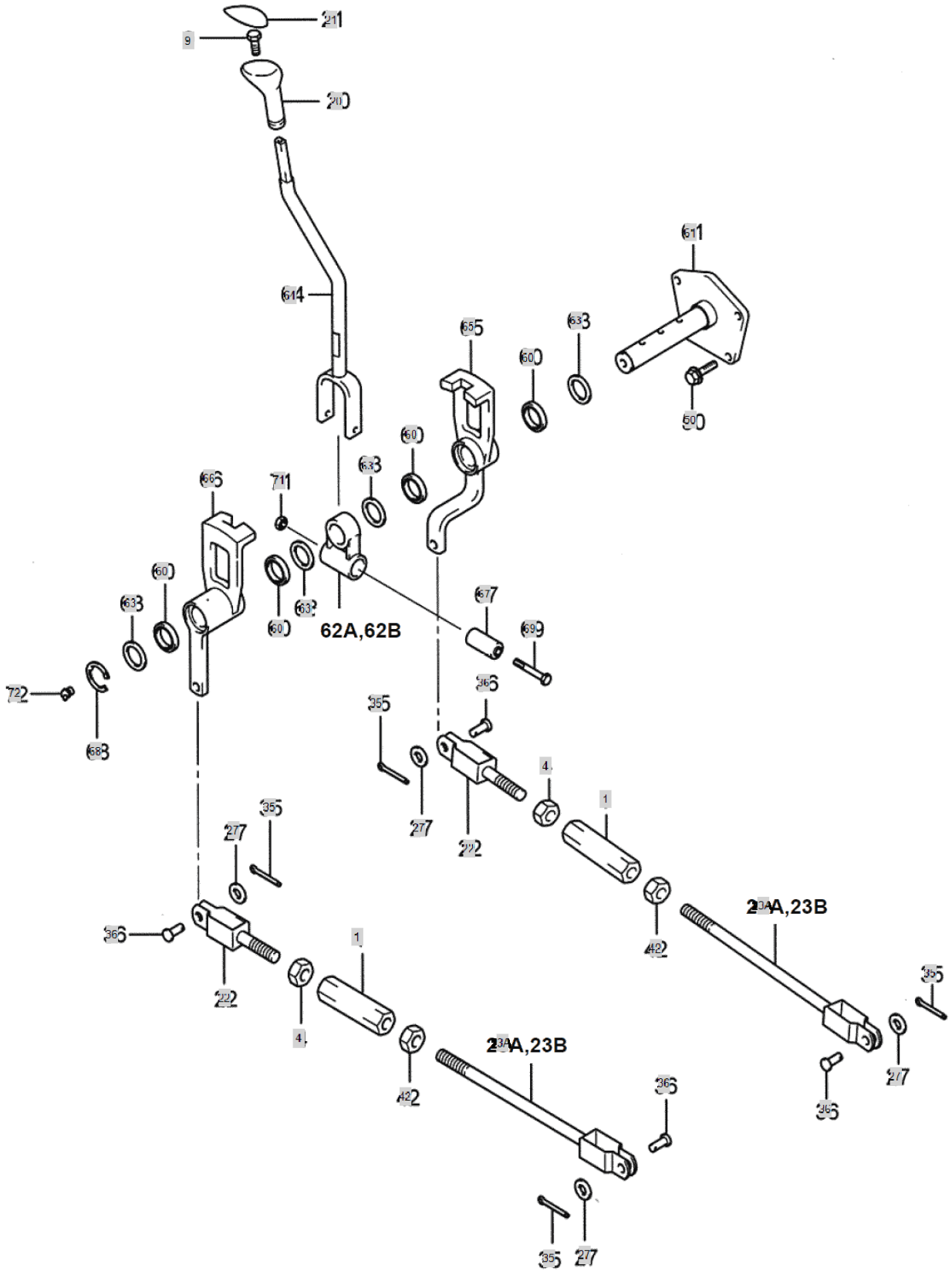

FIG 067 3520	LEVER, MAIN SHIFT	Year/Month 2020/02

KeyNo.	Part Number	Part Name	Quantity	Other
1	TT67010000A4	TURN BUCKLE	2	
4	TT67040000A4	NUT.LH	2	
9	26106-060122	HEX BOLT (6-12)	1	
20	FT67200100A2	KNOB,RANGESHIFTLEVER	1	
21	NT67210000A2	CAP,MAINSHIFT	1	
22	TN53250000A4	ROD(R)	2	
23A	TN53240000A4	ROD(L)	2	
27	22137-100000	WASHER, PLAIN (Φ 10)	4	
35	22417-200250	PIN , COTTER (2-25)	4	
36	22487-100240	PIN, HEAD (10-24)	4	
42	26716-120002	BOLT,CYLINDER HEAD(B)	2	
50	26013-080202	Bolt, Hexa (8-20)	4	
60	24430-253505	Seal, Oil (#25-35-05)	4	
61	NT67610000A2	SHAFT,MAINSHIFTLEVER	1	
62	TT67620000A4	HOLDER	1	
63	NT67630000A4	WASHER	4	
64	NT67640000B2	LEVER,MAINSHAFT	1	
65	NT67650000B2	ARM-B	1	
66	NT67660000B2	ARM-A	1	
67	FT67670000A4	RUBBERSPRING	1	
68	22272-000190	RING, CIRCLIP (Φ 19)	1	
69	26107-080752		1	
71	26341-080002	U-NUT	1	
72	24764-020000	GREASENIPPLE	1	

FIG 099 3520	HYDRAULIC PUMP	Year/Month 2020/02

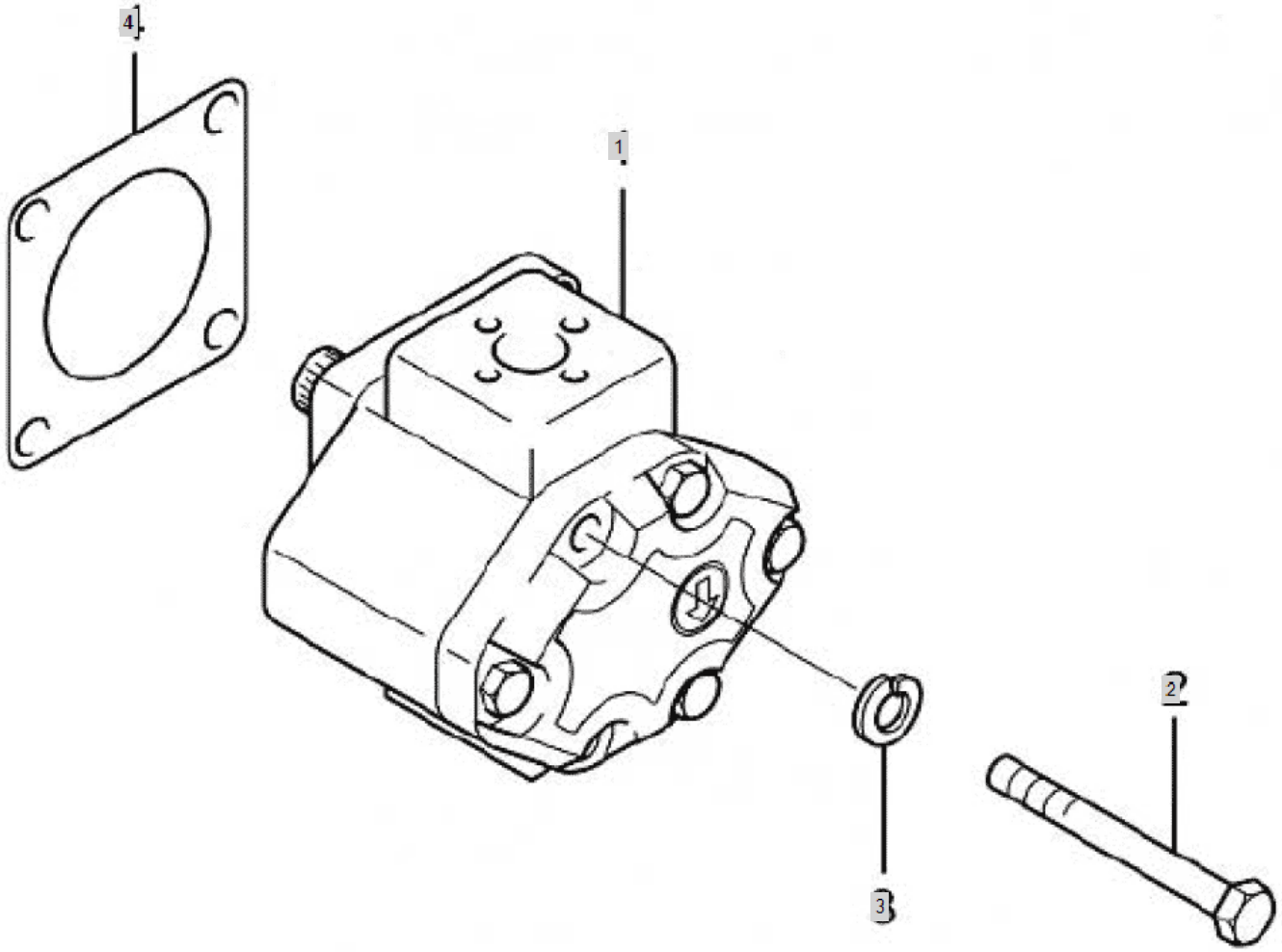

FIG 099 3520	HYDRAULIC PUMP	Year/Month 2020/02

KeyNo.	Part Number	Part Name	Quantity	Other
1	TZ34610000A3	HYDRAULICPUMP	1	
2	26116-081052	BOLT	2	
3	22217-080000	WASHER, SPRING (Φ 08)	2	
4	HK02350000A4	GASKET,ACCDRIVECOVER	1	

FIG 101 3520	CASE, HYD CYLINDER	Year/Month 2020/02

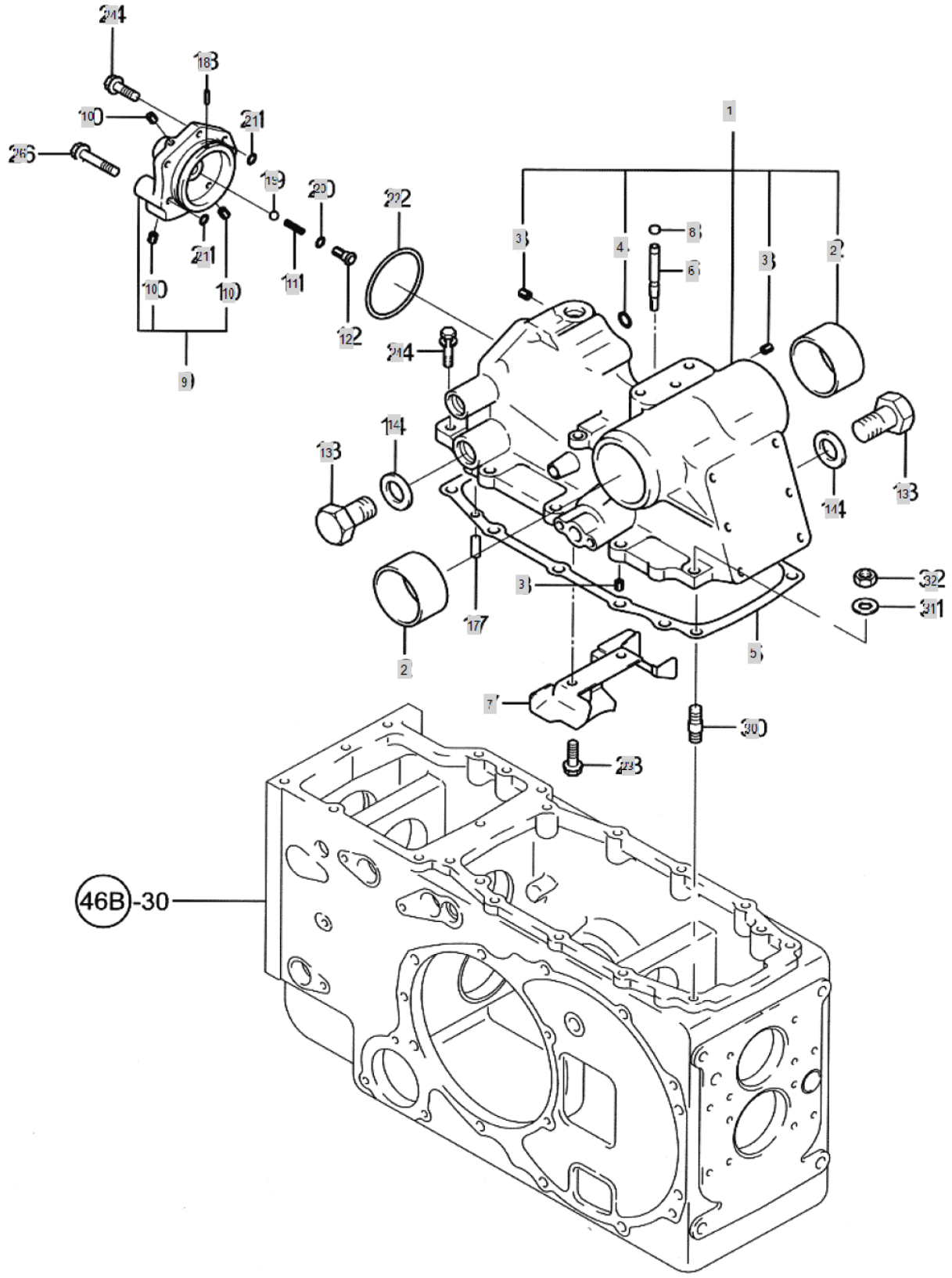

FIG 101 3520	CASE, HYD CYLINDER	Year/Month 2020/02

KeyNo.	Part Number	Part Name	Quantity	Other
1	TA00000611A	HYDRAULIC CYLINDER ASS'Y(0PORT,P)	1	
2	TTA1020000A4	BUSH	2	
3	23871-020000	Plug, Pipe	3	
4	24311-000110	O-RING, DYNAMIC (Φ11)	1	
5	TZA1050000A3	PACKING,HYD.CYL.CASE	1	
6	TTA1060000A4	AIRBREEDER	1	
7	TTA1070000A3	OILGUIDE	1	
8	FTA1080000B4	PLUG,BRAETHER	1	
9	TTA1090000A9	HEADCLTLINDER	1	
10	23871-010000	PLUG	3	
11	TTA1110000A4	SPRING,CHECKVALVE	1	
12	TTA1120000A4	PLUG,CHECKVALVE	1	
13	TTA1130000A4	PLUG	2	
14	TTA1140000A4	PACKING	2	
17	22312-100180	PIN, DOWEL (10-18)	2	
18	22351-040016	PIN, SPRING (4X16)	1	
19	24190-130003	BALLSTEEL	1	
20	24315-000120	O-RING	1	
21	24315-000140	O-RING	2	
22	24325-000800	O-RING	1	
23	26013-080122	Bolt, Hexa (8-12)	2	
24	26013-120352	SCREW,CAPTIVEWASHERCAP	5	
26	26013-120552	BOLT,W/SW	1	
30	26216-120352	STEELBOLT	5	
31	22217-120000	WASHER, SPRING (Φ 12)	5	
32	26716-120002	BOLT,CYLINDER HEAD(B)	5	

FIG 103-1 3520	SCV VALVE SUPPORT	Year/Month 2020/02

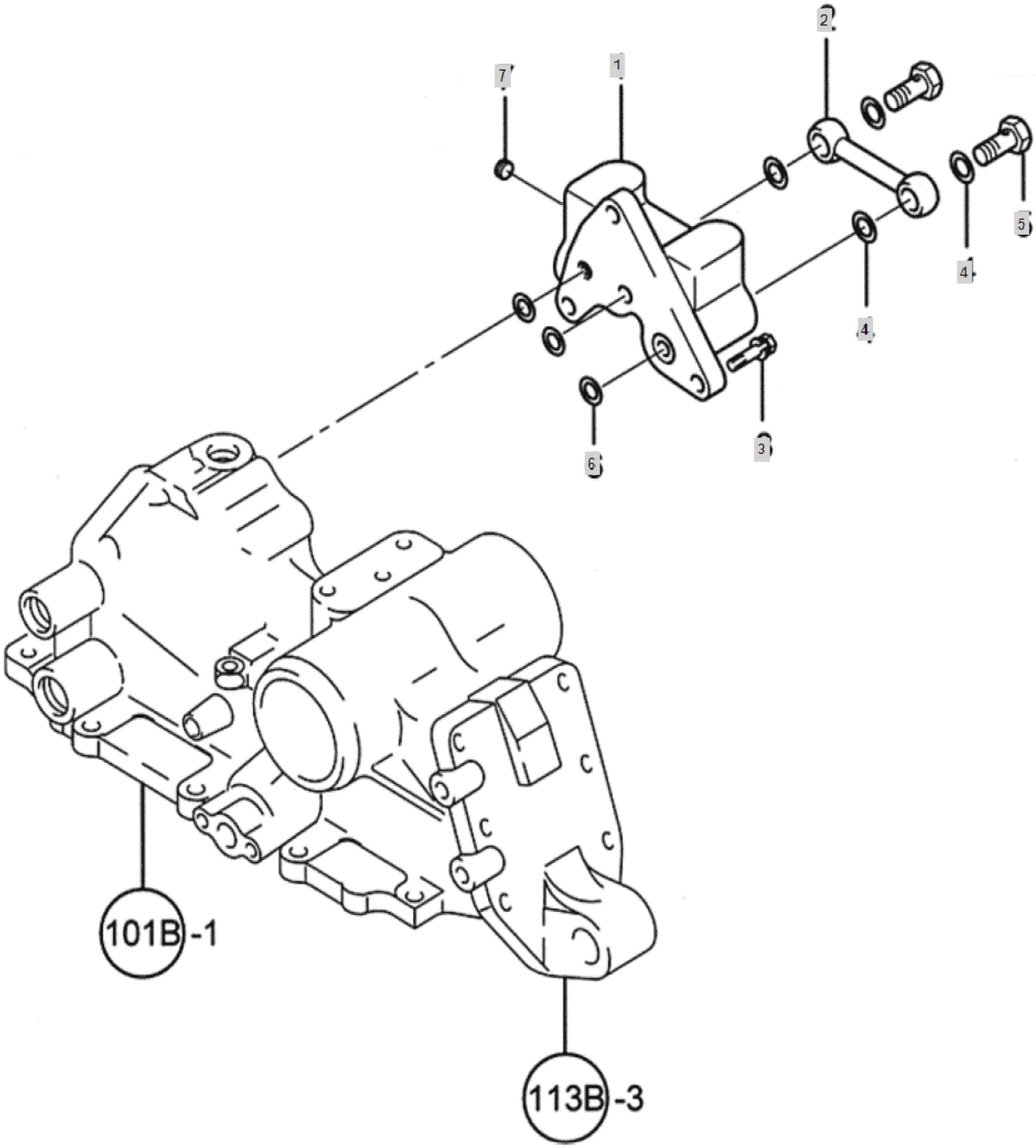

FIG 103-1 3520	SCV VALVE SUPPORT	Year/Month 2020/02

KeyNo.	Part Number	Part Name	Quantity	Other
1	TTA3350000A2	S.C.VSUPPORT	1	
2	TZA3410000B3	PIPE, RETURN	1	
3	26013-080252	Bolt, Hexa (8-25)	3	
4	23414-200026	WASHER, PLAIN (Φ 20)	4	
5	TTB4180000A4	BOLT	2	
6	24315-000120	O-RING	3	
7	23871-010000	PLUG	1	

FIG 104 3520	3 POINT LIFT PISTON ASS'Y	Year/Month 2020/02

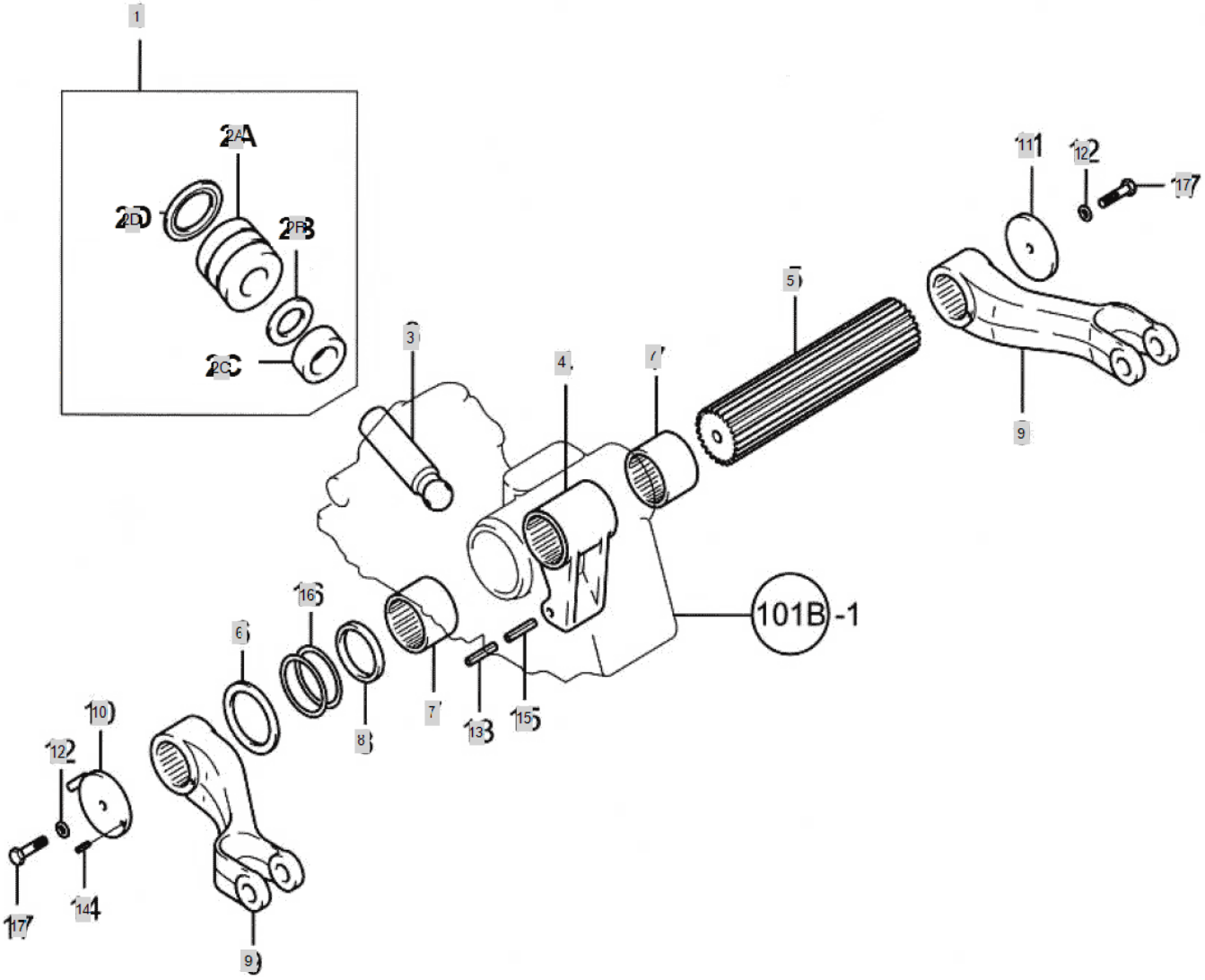

FIG 104 3520	3 POINT LIFT PISTON ASS'Y	Year/Month 2020/02

KeyNo.	Part Number	Part Name	Quantity	Other
1	TNA4010000C9	HYD PISTON ASSY	1	
2A	TNA401A000C3	PISTON	1	
2B	TB36400000A4	RING, BACKUP	1	
2C	TNA401C000A4	RING,WEAR	2	
2D	TNA4020000A9	U-PACKING	1	
3	TTA4030000A3	ROD,PISTON	1	
4	TTA4040000A3	CRANKLIFT	1	
5	TTA4050000A3	SHAFT,LIFTLINK	1	
6	TTA4060000A4	WASHERTHRUST	2	
7	TTA4070000A4	SLEEVELIFTLINKSHAFT	2	
8	TTA4080000A4	SEAL,SPLINE	2	
9	TTA4090000A3	LIFTARM	2	
10	TTA4100000B4		1	
11	TTA4110000A4	RETAINER,LIFTSHAFT	1	
12	22217-120000	WASHER, SPRING (Φ 12)	2	
13	22351-050063	PIN, SPRING (5-06)	1	
14	22351-060016	PIN, SPRING (6-16)	1	
15	22351-080063	PIN, SPRING (8-63)	1	
16	24321-000650	O-RING, FIX(Φ65)	4	
17	26116-120352	BOLT	2	

FIG 106 3520	3 POINT LIFT CONTROL VALVE	Year/Month 2020/02

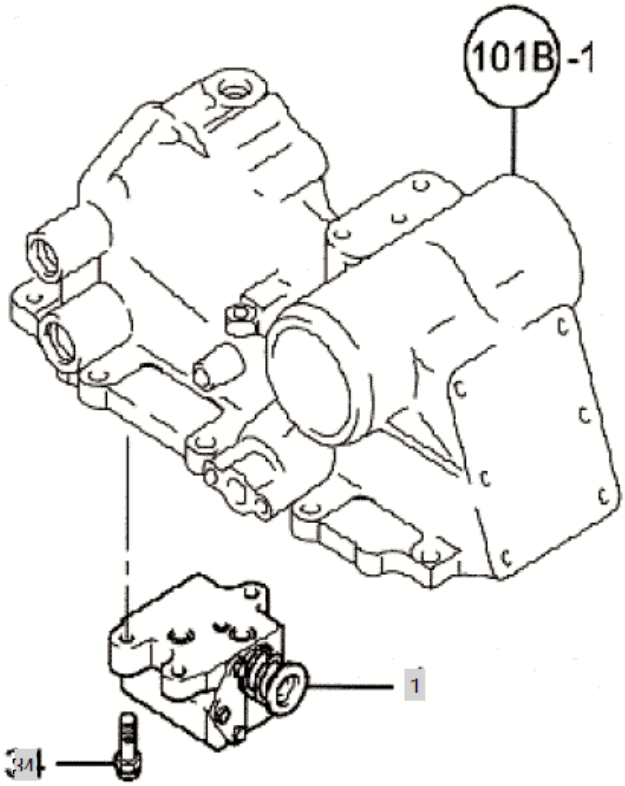

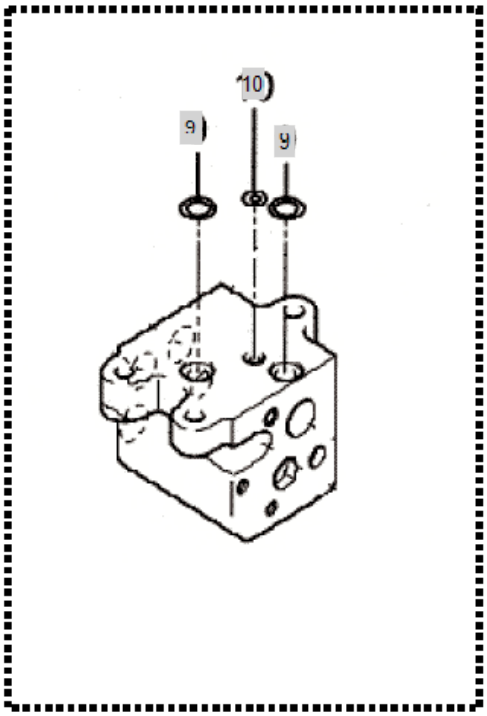

FIG 106 3520	3 POINT LIFT CONTROL VALVE	Year/Month 2020/02

KeyNo.	Part Number	Part Name	Quantity	Other
1	TTA6010000A3	CONTROL VALVE ASSY	1	
9	24311-000140	O-RING, DYNAMIC (Φ14)	2	
10	TTA6100000A9	O-RING(P)	1	
34	26450-080202	HEXAGONSOCKETCAPBOLT	3	

FIG 108 3520	3 POINT LIFT RELIEF VALVE	Year/Month 2020/02

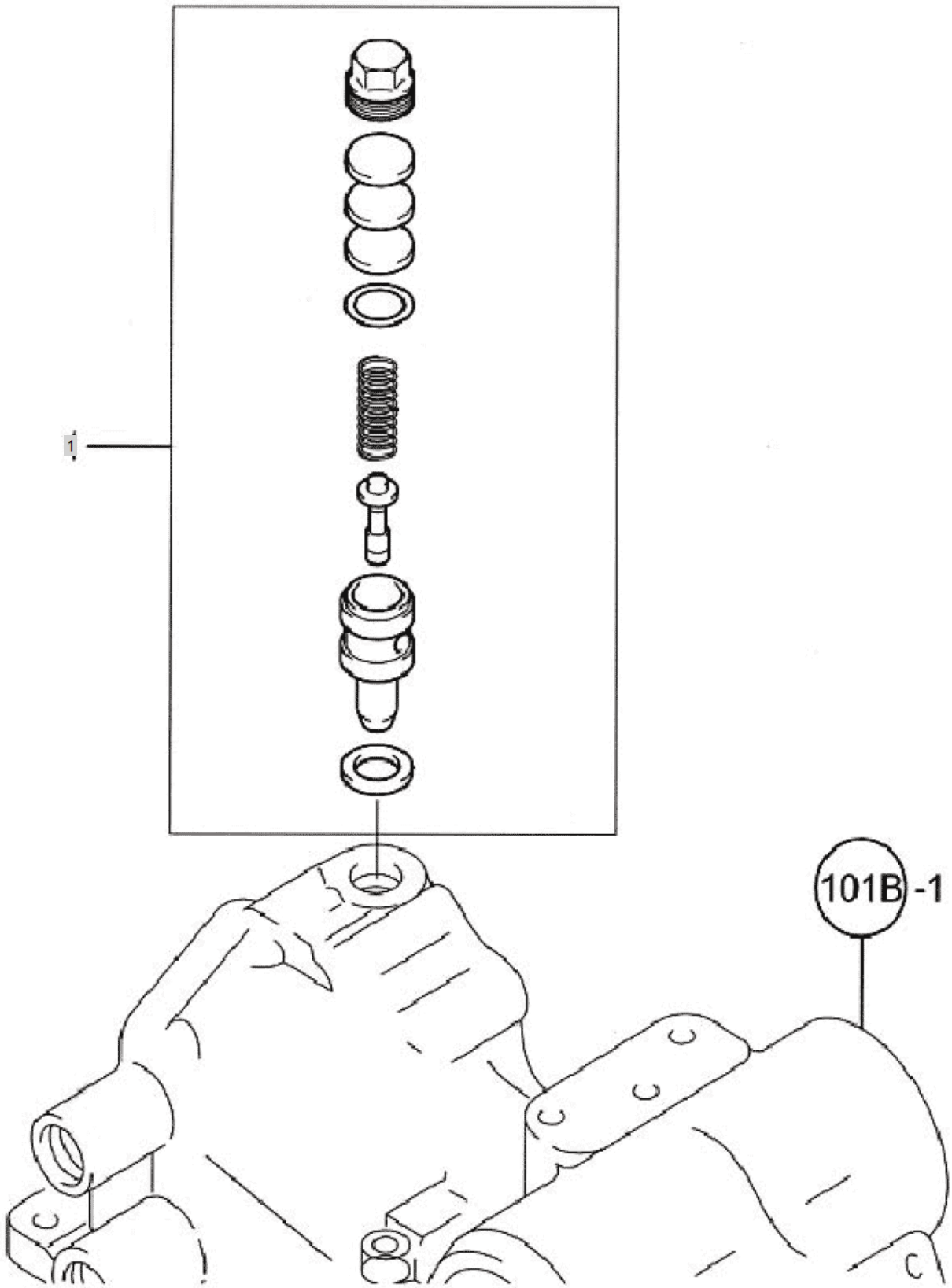

FIG 108 3520	3 POINT LIFT RELIEF VALVE	Year/Month 2020/02

KeyNo.	Part Number	Part Name	Quantity	Other
1	TTA8010000A3	VALVECMP.RELIEF	1	

FIG 109 3520	3 POINT LIFT STOP VALVE	Year/Month 2020/02

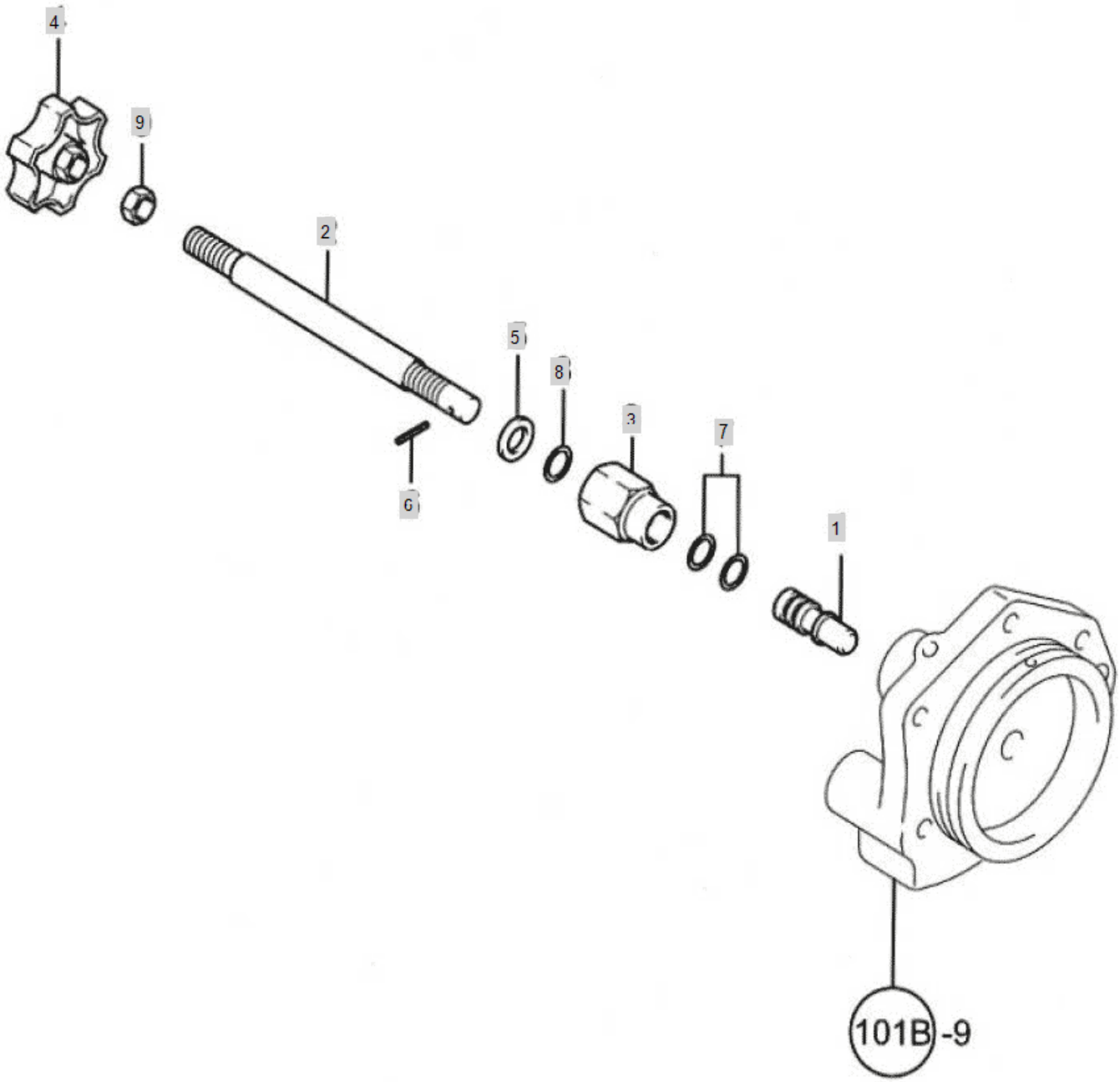

FIG 109 3520	3 POINT LIFT STOP VALVE	Year/Month 2020/02

KeyNo.	Part Number	Part Name	Quantity	Other
1	TTA9010000A4	STOPVALVE	1	
2	TNA9020000A4	BOLT	1	
3	TTA9030000A4	HOLDER	1	
4	TTA9040000A4	KNOB	1	
5	22117-080000	WASHER, PLAIN (Φ 08)	1	
6	22351-040012	PIN, SPRING (4-01)	1	
7	24311-000110	O-RING, DYNAMIC (Φ11)	2	
8	24311-000120	O-RING, DYNAMIC (Φ12)	1	
9	26716-100002	Nut, Hexa (Φ10)	1	

FIG 110 3520	3 POINT LIFT SAFETY VALVE	Year/Month 2020/02

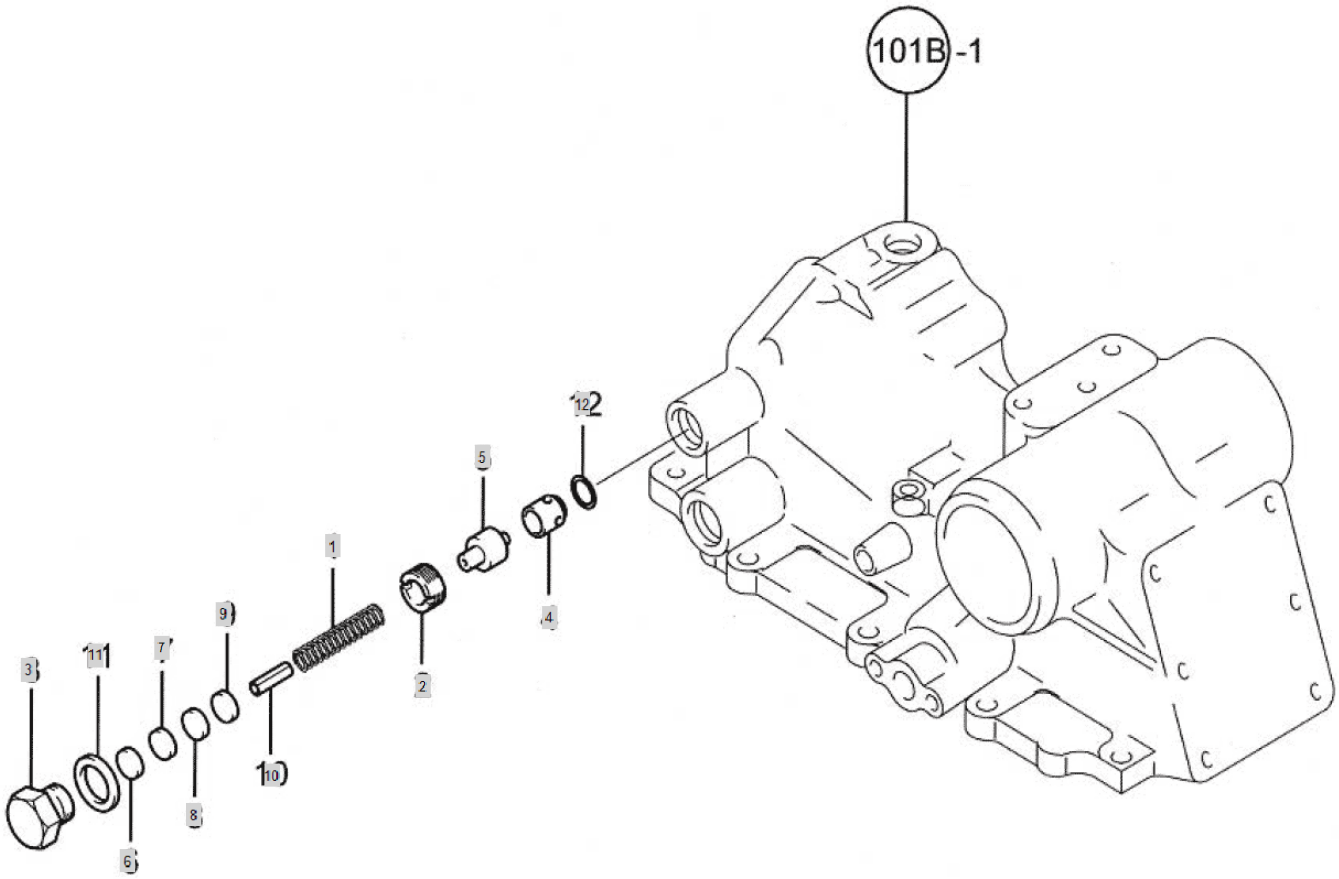

FIG 110 3520	3 POINT LIFT SAFETY VALVE	Year/Month 2020/02

KeyNo.	Part Number	Part Name	Quantity	Other
1	TTB0010000A4	SPRING,RELIEFVALVE	1	
2	TTB0020000A4	SCREW,VALVESEAT	1	
3	TTB0030000A4	PLUG,RELIEFVALVE	1	
4	TTB0040000A4	SEAT,SAFETYVALVE	1	
5	TTB0050000A4	POPPET,SAFETYVALVE	1	
6	TB36670000A4	SHIM	2	
7	TB36680000A4	SHIM	2	
8	TB36690000A4	SHIM	2	
9	TB36700000A4	SHIM	3	
10	22351-060025	PIN, SPRING (6-25)	1	
11	24311-000180	O-RING, DYNAMIC (Φ18)	1	
12	24311-000120	O-RING, DYNAMIC (Φ12)	1	

FIG 111 3520	HYDRAULIC CONTROL	Year/Month 2020/02

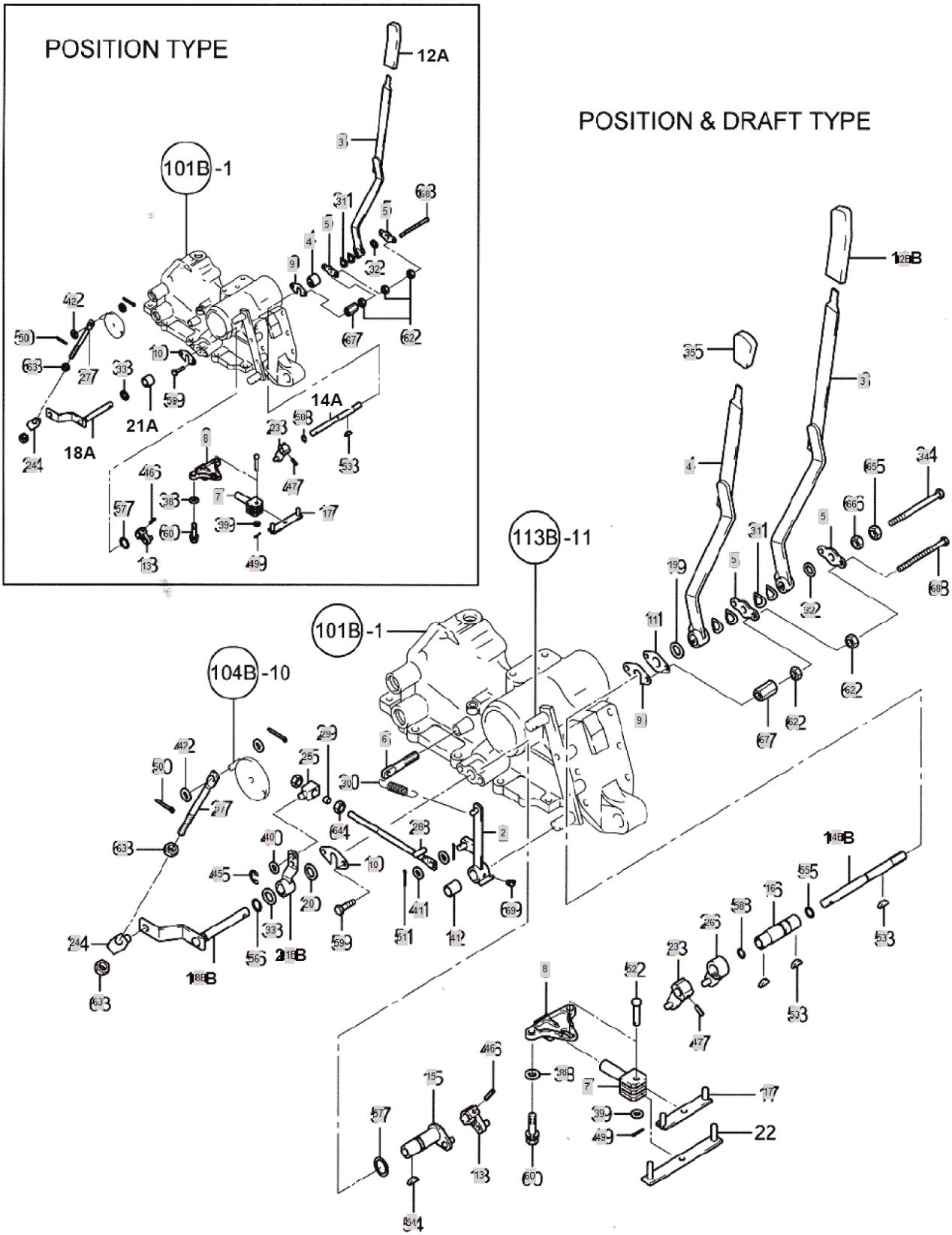

FIG 111 3520	HYDRAULIC CONTROL	Year/Month 2020/02

KeyNo.	Part Number	Part Name	Quantity	Other
1	TTB1010000A4	BUSH	1	
2	TTB1020000A3	SPRINGPIN6*25	1	
3	NTB1030000A3	LEVER,CONTROL	1	
4	TNB1040000A3	LEVER	1	
5	TTB1050000A4	PLATE	2	
6	TTB1060000A4	BRAKETSPRING	1	
7	TTB1070000A4	RODCONTRDL	1	
8	TTB1080000A3	PLATECONTRDL	1	
9	TTB1090000A4	PLATEA	1	
10	TTB1090000A4	PLATEA	1	
11	TTB1110000A4	PLATEB	1	
12B	TTB1120000A4	KNOB	1	
13	TTB1130000A4	ARM(PCF)	1	
14B	TTB1140000A4	ADJUSTER	1	
15	TTB1150000A4	ARMDRAFTCONTROL	1	
16	TTB1160000A4	SHAFT,DRAFTCONTROL	1	
17	TTB1170000A4	BAR,DRAFTCONTROL	1	
18B	TTB1180000A3	ARMPOSTIONCONTROL	1	
19	TTB1190000A4	PLATE	1	
20	TTB1190000A4	PLATE	1	
21B	TTB1210000A4	ARM,DRAFTCONTROL	1	
23	TTB1230000A4	ARM,POSITIONCONTROL	1	
24	TTB1240000A4	ADJUSTER	1	
25	TTB1240000A4	ADJUSTER	1	
26	TTB1260000A4	ARM,DRAFTCONTROL	1	
27	TTB1270000A4	ROD,FEEDBACK	1	
28	TTB1280000A4	ROD,DRAFTFEEDBACK	1	
29	TTB1290000A4	COLLAR	1	
30	TTB1300000A4	SPRING,RETURN	1	
31	TT01140000A4	SPRINGWASHER	2	
32	TTB1320000A4	PLATE,FRICTION	1	
33	TZB1330000A4	PLATE	1	
34	26116-080802	BOLTM8X80	1	
35	TT29260000A4	KNOB	1	
38	22137-080000	WASHER, PLAIN (Φ 08)	2	
39	22137-080000	WASHER, PLAIN (Φ 08)	1	
40	22137-100000	WASHER, PLAIN (Φ 10)	2	
41	22137-100000	WASHER, PLAIN (Φ 10)	1	
42	22137-100000	WASHER, PLAIN (Φ 10)	3	
43	22137-120000	WASHER, PLAIN (Φ 12)	1	
45	22272-000070	RING, CIRCLIP (Φ 07)	2	
46	22351-050032	PIN, SPRING (5-03)	1	
47	22351-050032	PIN, SPRING (5-03)	1	
48	22360-080000	PIN , SNAP (8Φ)	1	
49	22417-200200	PIN , COTTER (2-20)	1	

FIG 111 3520	HYDRAULIC CONTROL	Year/Month 2020/02

KeyNo.	Part Number	Part Name	Quantity	Other
50	22417-300200	PIN , COTTER (3-20)	2	
51	22417-300200	PIN , COTTER (3-20)	2	
52	2248-080350	PIN	1	
53	22522-030130	KEY, WOODRUFF (03-13)	1	
54	22522-030130	KEY, WOODRUFF (03-13)	1	
55	24311-000090	O-RING, DYNAMIC (Φ9)	1	
56	24311-000090	O-RING, DYNAMIC (Φ9)	1	
57	24311-000160	O-RING, DYNAMIC (Φ16)	1	
58	24311-000160	O-RING, DYNAMIC (Φ16)	1	
59	26013-080162	Bolt, Hexa (8-16)	2	
60	26013-080202	Bolt, Hexa (8-20)	2	
62	26716-080002	NUT,HEX (D8)	3	
63	26716-100002	Nut, Hexa (Φ10)	2	
64	26716-100002	Nut, Hexa (Φ10)	2	
65	26716-120002	BOLT,CYLINDER HEAD(B)	1	
66	26756-120002	LOCKNUTM12PLATED	1	
67	TTB1670000A4	NUT	1	
68	26116-080804	HEXAGONBOLT	1	
69	24764-060000	GREASE NIPPLE	1	

FIG 113 3520	DRAFT CONTROL	Year/Month 2020/02

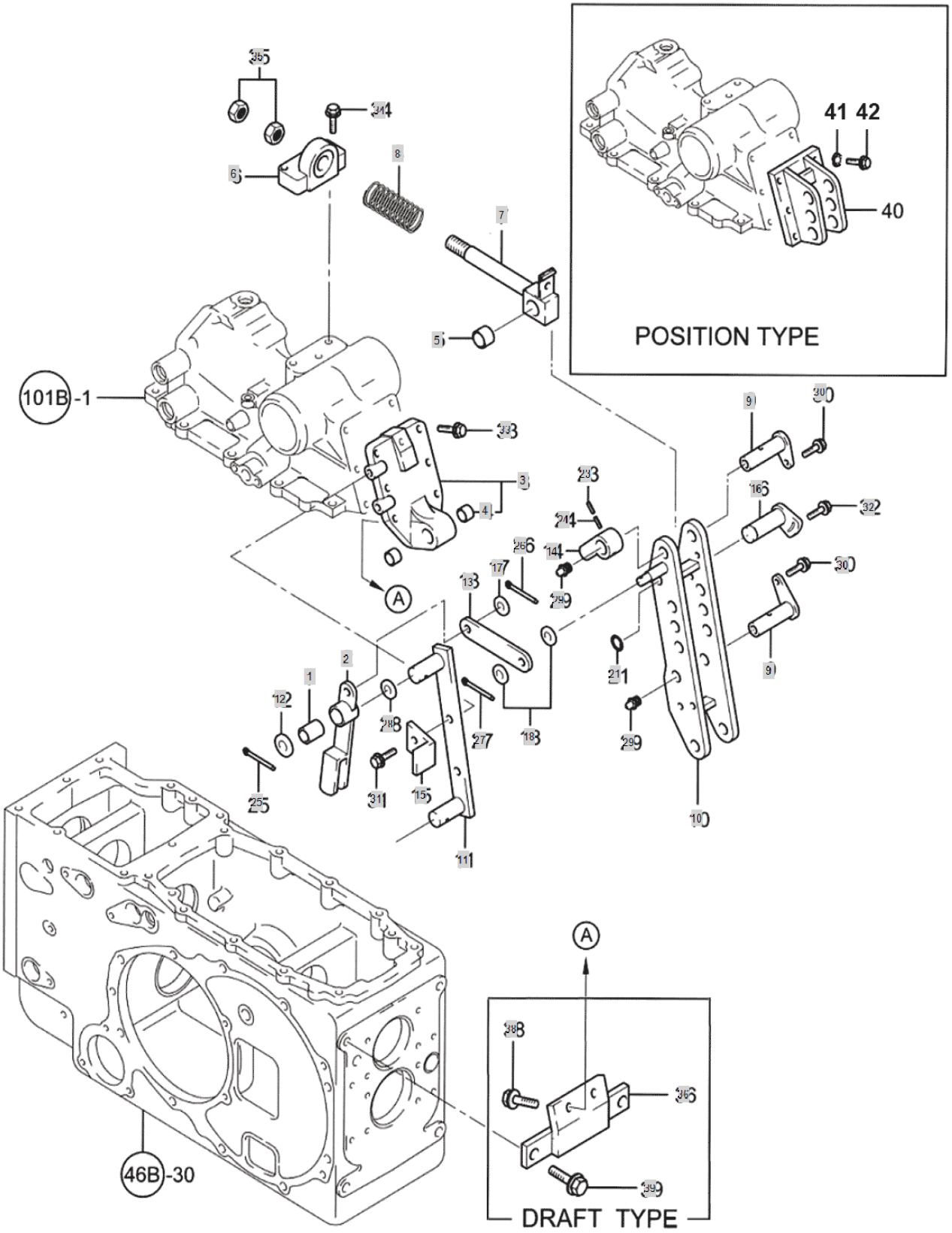

FIG 113 3520	DRAFT CONTROL	Year/Month 2020/02

KeyNo.	Part Number	Part Name	Quantity	Other
1	TTB1010000A4	BUSH	1	
2	TTB3020000A3	LINKDF	1	
3	TTB3030000A4	HINGE.D.ASS`Y,SUPPORT	1	
4	TT67120000A4	BUSH	1	
5	TT67120000A4	BUSH	1	
6	TTB3060000A3	HOLDER,SENSORSPRING	1	
7	TNB3070000A3	BOLTSENSOR	1	
8	TTB3080000B4	SENSORSPRING	1	
9	TTB3090000A4	PIN,HINGE	2	
10	TZB3100000C2	TOP LINK HINGE	1	
11	TTB3110000A4	PLATE	1	
12	TTB3120000A4	SPACER	2	
13	TTB3130000A4	PLATELINK	1	
14	TTB3140000A4	CAMDRAFTRID	1	
15	TTB3150000A4	STOPPERDRAFTLINK	1	
16	TTB3160000A4	SHAFTLOCK	1	
17	22137-100000	WASHER, PLAIN (Φ 10)	1	
18	22137-100000	WASHER, PLAIN (Φ 10)	2	
21	22272-000150	RING, CIRCLIP (Φ 15)	1	
22	22312-100180	PIN, DOWEL (10-18)	1	
23	22351-035032	PIN, SPRING (3.5-32)	1	
24	22351-060032	PIN, SPRING (6-32)	1	
25	22417-250250	PIN , COTTER (2-25)	2	
26	22417-300200	PIN , COTTER (3-20)	1	
27	22417-300200	PIN , COTTER (3-20)	1	
28	23414-160000	WASHER,SEALING	2	
29	TA27160000A4	GREASE NIPPLE	2	
30	26013-080162	Bolt, Hexa (8-16)	2	
31	26013-080292	BOLT W/WASHER	1	
32	26014-080202	Bolt, Hexa (8-20)	1	
33	26013-120322	HEX BOLT W/WASHER	4	
34	26013-120352	SCREW,CAPTIVEWASHERCAP	2	
35	26716-160002	NUT	2	
36	TNB3360000A3	STAYHINGE	1	
38	26013-120302	HEX BOLT W/WASHER	4	
39	26116-120502	BOLT	2	

FIG 114 3520	HYDRAULIC PIPES	Year/Month 2020/02

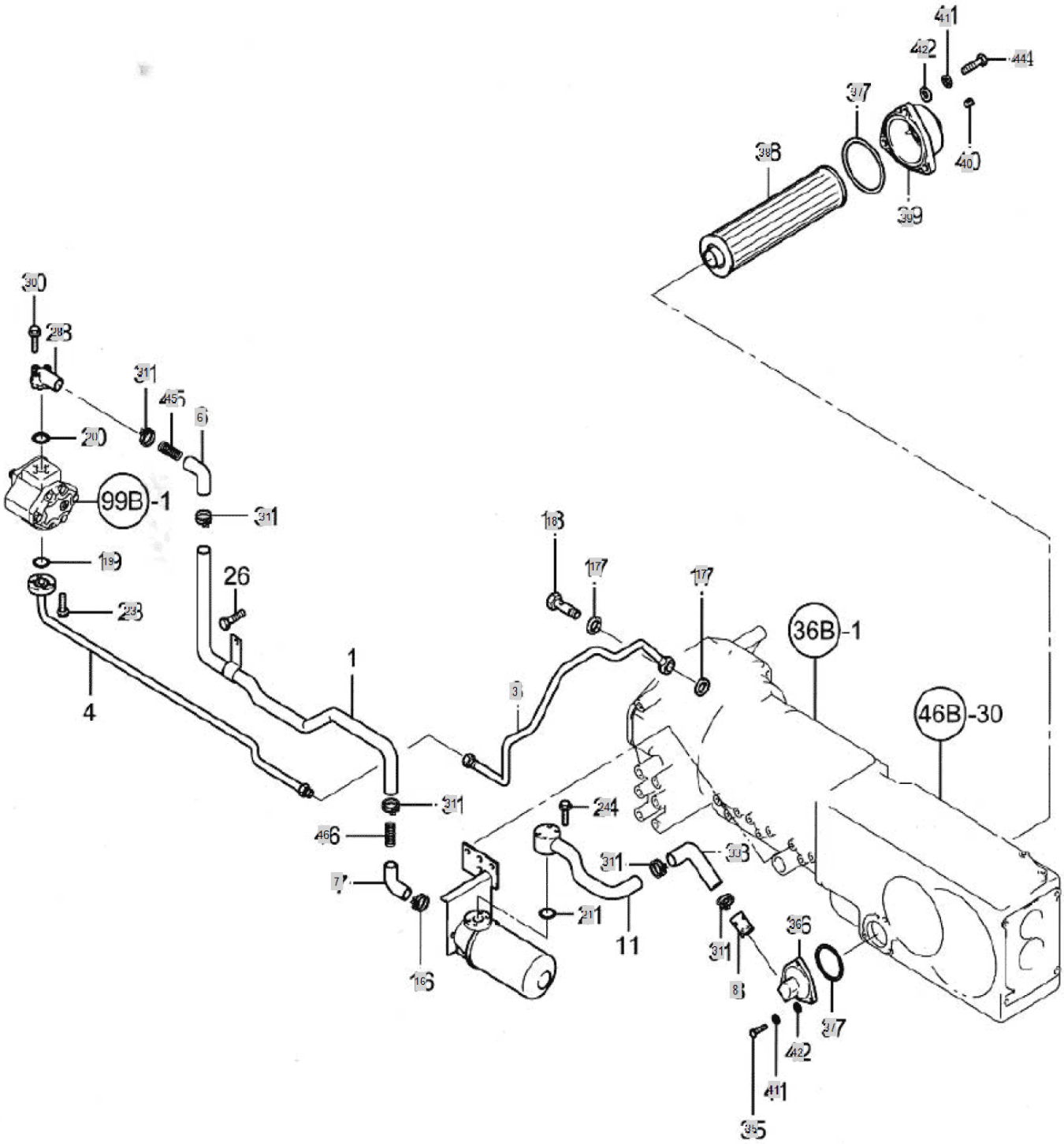

FIG 114 3520	HYDRAULIC PIPES	Year/Month 2020/02

KeyNo.	Part Number	Part Name	Quantity	Other
1B	NTB401H000A2		1	
3	NTB4030000A1	PIPE(REAR),HIGHERPRESSURE	1	
4A	NTB4040000A3	PIPE,LOWERPRESSURE	1	
6	TTB4060000A4	HOSEA,LOWERPRESSURE	1	
7	NTB4070000B4	HOSE,LOWPRESSURE	1	
8	TNB4080000A4	PIPE,CONNECTING	1	
11B	NTB411H000A3		1	
16	23010-044000	HOSEBAND	1	
17	23414-200026	WASHER, PLAIN (Φ 20)	2	
18	TTB4180000A4	BOLT	1	
19	24311-000200	O-RING, DYNAMIC (Φ20)	1	
20	24311-000200	O-RING, DYNAMIC (Φ20)	1	
21	24321-000250	O-RING	1	
23	26106-060252	Screw, (6-25)	4	
24	26106-060502	FLANGEBOLT	4	
28	TTB4280000A3	FLANGEPIPE	1	
30	26106-060402	FLANGEBOLT	3	
31	23010-038000	HOSEBAND	7	
33	TNB4330000A4	HOSEC,LOWPRESS.	2	
35	26116-080252	BOLT7T(8X25)	6	
36	TNB4360000A3	COVERRHSTRAINER	1	
37	24321-000860	SUB TO-> 24321-000850	2	
38	TNB4380000A3	HYDSTRAINER	1	
39	TB38300000A3	SCREENCOVER(L)	1	
40	TB38330000A4	TAPERFLUG	1	
41	22217-080000	WASHER, SPRING (Φ 08)	6	
42	22137-080000	WASHER, PLAIN (Φ 08)	6	
44	26106-080162	SCREW,HEXFLANGEHEADCAP	1	
45	TTB4360000A4	SPRINGA	1	
46	TTB4370000A4	SPRINGB	1	

FIG 118 3520	HYDRAULIC FILTER	Year/Month 2020/02

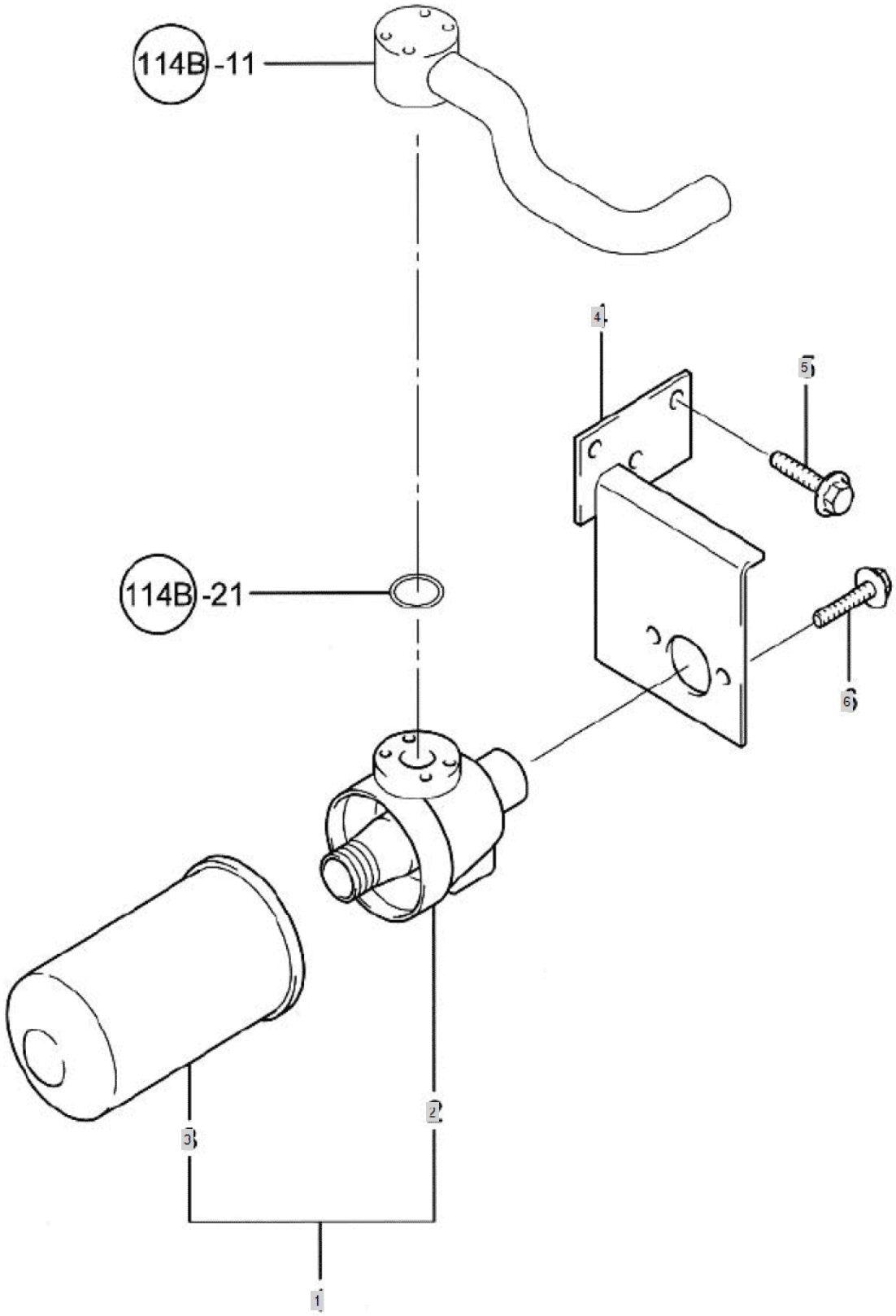

FIG 118 3520	HYDRAULIC FILTER	Year/Month 2020/02

KeyNo.	Part Number	Part Name	Quantity	Other
1	TTB8010000A3	HYD.FILTERA,SSY	1	
2	TTB8020000A3	COVER,FILTER ASSY	1	
3	NTB8030000B3	FILTER, HYDRAULIC OIL (10/20 SERIES)	1	
4	NTB8040000A3	FILLTERBRACKET	1	
5	26106-080162	SCREW,HEXFLANGEHEADCAP	3	
6	26106-080202	SQR FLANGE BOLT	2	

FIG 119 3520	WIRING HARNESS	Year/Month 2020/02

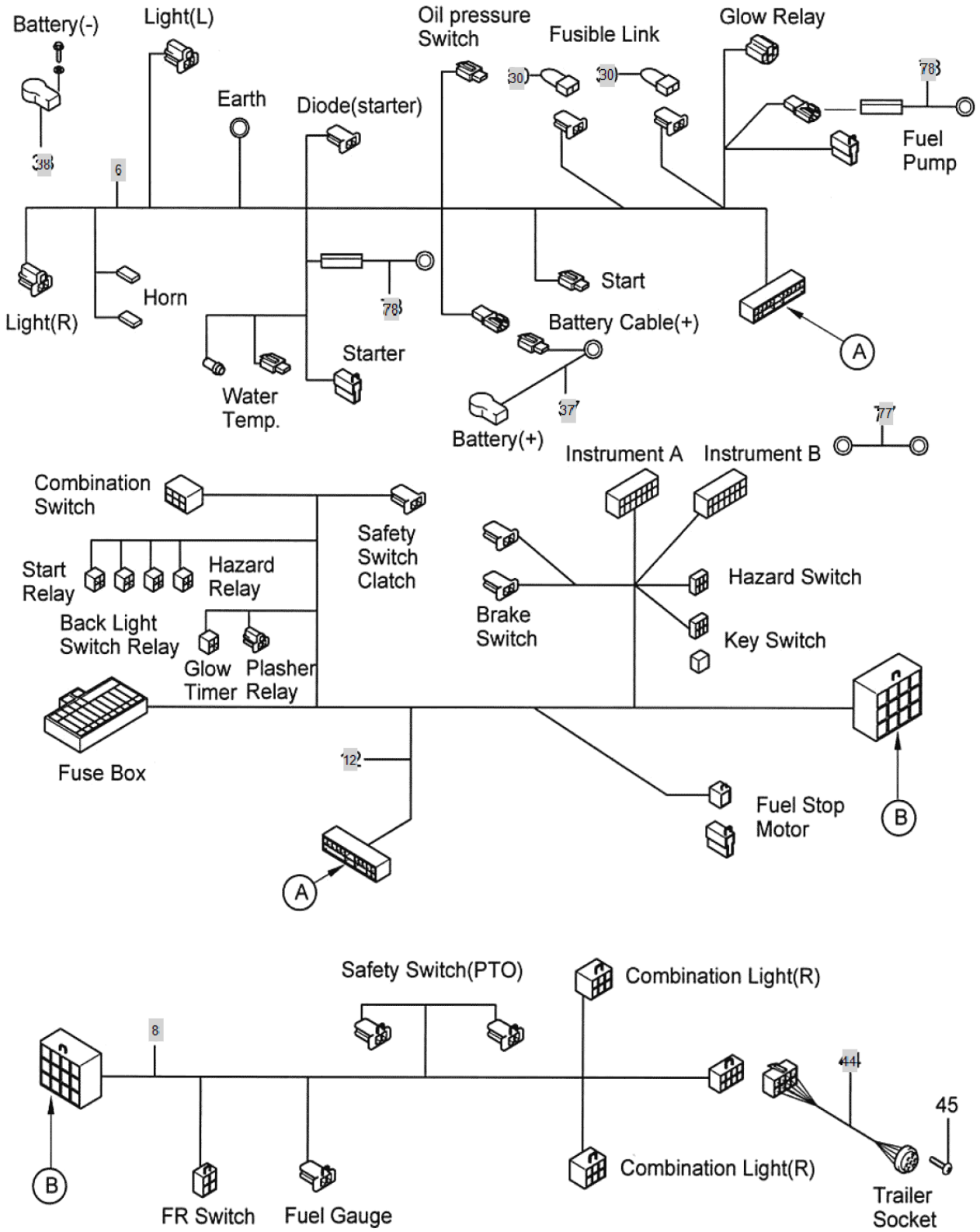

FIG 119 3520	WIRING HARNESS	Year/Month 2020/02

KeyNo.	Part Number	Part Name	Quantity	Other
6	NTB9060000A2	WIREHARNESS[A]	1	
8	NTB9080000A2	WIREHARNESS[B]	1	
12	NTB9120000A1	ELE.WIREFASS`Y	1	
30	CEH3160000A4	FUSIBLE LINK 0.85	2	
37	TTB9370000C4	BATTERYCABLE(+)	1	
38	TTB9380000A4	BATTERYCABLE(-)	1	
44	TZB9440000A3	TRAILERSOCKET	1	
77	TZB9770000A4	GROUNDINGCONDUCTOR	1	
78	CEH3120000A4	WIRE HARNESS H	1	

FIG 124 3520	BATTERY & HORN	Year/Month 2020/02

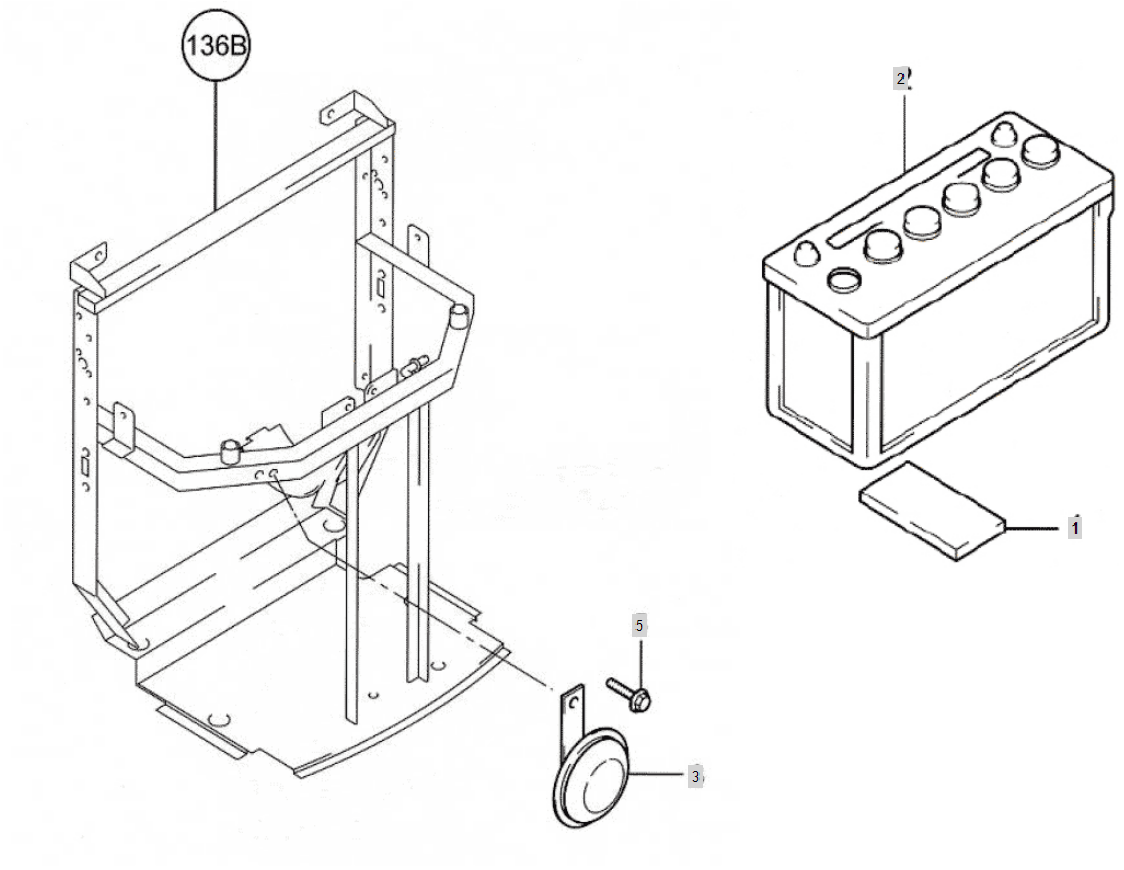

TTD1030000B3

THIS PART HAS TWO SEPARATE WIRE TERMINAL POST

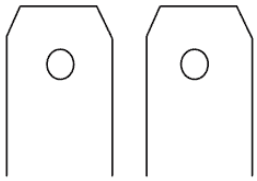

FIG 124 3520	BATTERY & HORN	Year/Month 2020/02

KeyNo.	Part Number	Part Name	Quantity	Other
1	TTC4010000A4	TANKRUBBER,DUSTPROOF	2	
2	NTC4020000A1	BATTERYASS`Y	1	
3	TTD1030000B3	HORN	1	
5	26106-080122	Bolt, Hexa (8-12)	1	

FIG 125 3520	SWITCH	Year/Month 2020/02

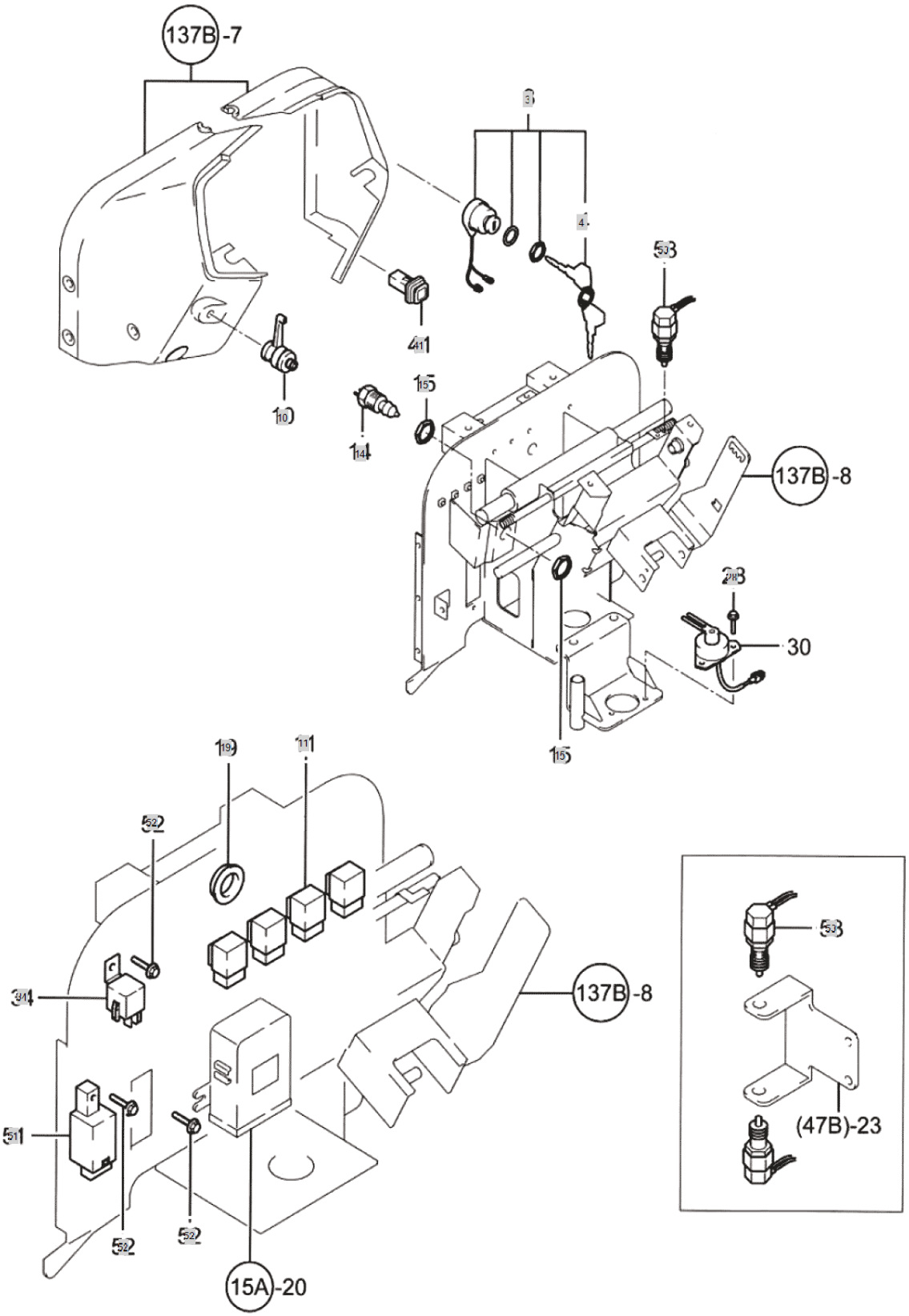

FIG 125 3520	SWITCH	Year/Month 2020/02

KeyNo.	Part Number	Part Name	Quantity	Other
3	TTC5030000B3	STARTERSWITCHASS'Y	1	
4	TTC5070000A9	IGNITION KEY	1	
10	CBF3010000A2	COMBINATION S/W	4	
11	CBF6030000A4	RELAYCA-1A	4	
14	TZC5140000A3	SAFETY S/W, START	1	
15	TT5150011A4	SUB TO-> TZC5140000A3	2	
19	TTC5190000A4	GROMMET20.5	1	
24	22217-050000	WASHER, SPRING (Φ 05)	2	
28	26106-060122	HEX BOLT (6-12)	3	
30	TCD9110000A2	SWITCHA'SSY	1	
31	26557-050122	(+)SCREW	2	
32	26587-040122	BINDINGSCREW	3	
33	26776-120002	LOCKNUTM12	2	
34	FTB9160000A3	GLOW RELAY (12V-70A)	1	
36	22217-080000	WASHER, SPRING (Φ 08)	2	
37	22137-080000	WASHER, PLAIN (Φ 08)	2	
41	FTC5340000A3	EMERGENCY LAMP SWITCH	1	
51	TTD4240000B3	FLASHERRELAY	1	
52	26160-060162	HEX FLANGE BOLT	4	
53	TZC5110000A3	STOPLAMPSWITCH	4	

FIG 132 3520	LAMP	Year/Month 2020/02

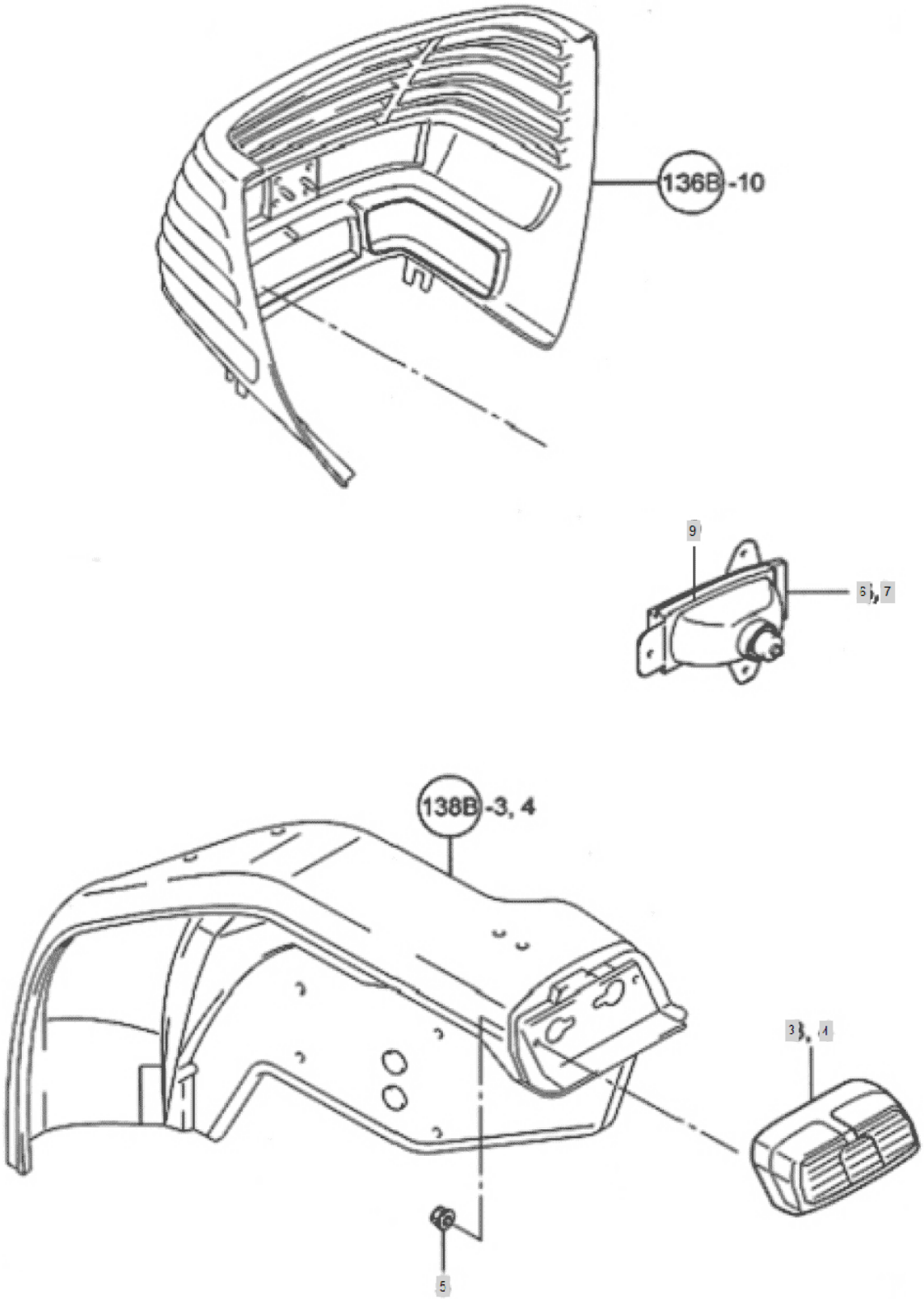

FIG 132 3520	LAMP	Year/Month 2020/02

KeyNo.	Part Number	Part Name	Quantity	Other
3	NTD2160000A3	COMBINATIONLAMP(L)	1	
4	NTD2170000A3	COMBINATIONLAMP(R)	1	
5	26367-060002	Nut, Hexa (Φ6)	4	
6	TCE1030000A3	HEADLAMP (LH)	1	
7	TCE1090000A3	HEADLAMP (RH)	1	
9	TCE1090100A4	BULB	2	

FIG 132-1 3520	FOOT REST	Year/Month 2020/02

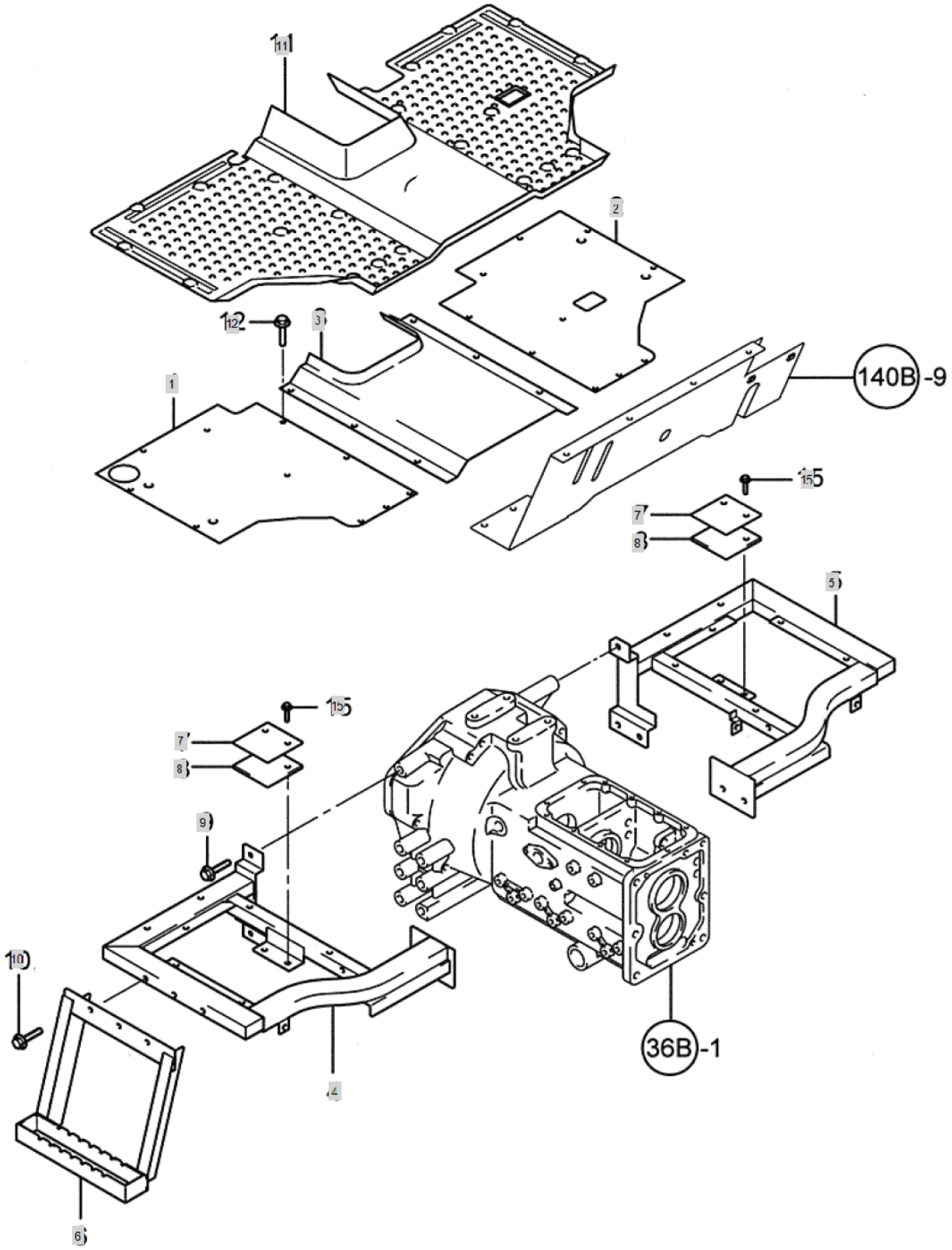

FIG 132-1 3520	FOOT REST	Year/Month 2020/02

KeyNo.	Part Number	Part Name	Quantity	Other
1	NTD9010000A2	FOOTREST(L)	1	
2	NTD9020000A2	FOOTREST(R)	1	
3	NTD9060000A2	FOOTREST(M)	1	
4	NTD9040000A1	GUARD(L),FOOTREST	1	
5	NTD9050000A1	GUARDR,FOOTREST	1	
6	NTD9130000A2	SUBFOOTREST	2	
7	NTD9420000A4	SETUPPLATE(UP),FUELTANK	2	
8	NTD9430000A4	FUELTANKURETHAN	2	
9	26106-100202	HEX BOLT, (10-20)	10	
10	26106-080652	SCREW,HEXFLANGEHEADCAP	6	
11	NTD9090000D1	FOOTBOART CUSHION RUBBER	1	
12	26106-080122	Bolt, Hexa (8-12)	20	
15	26106-080162	SCREW,HEXFLANGEHEADCAP	4	

FIG 134 3520	METER ASS'Y	Year/Month 2020/02

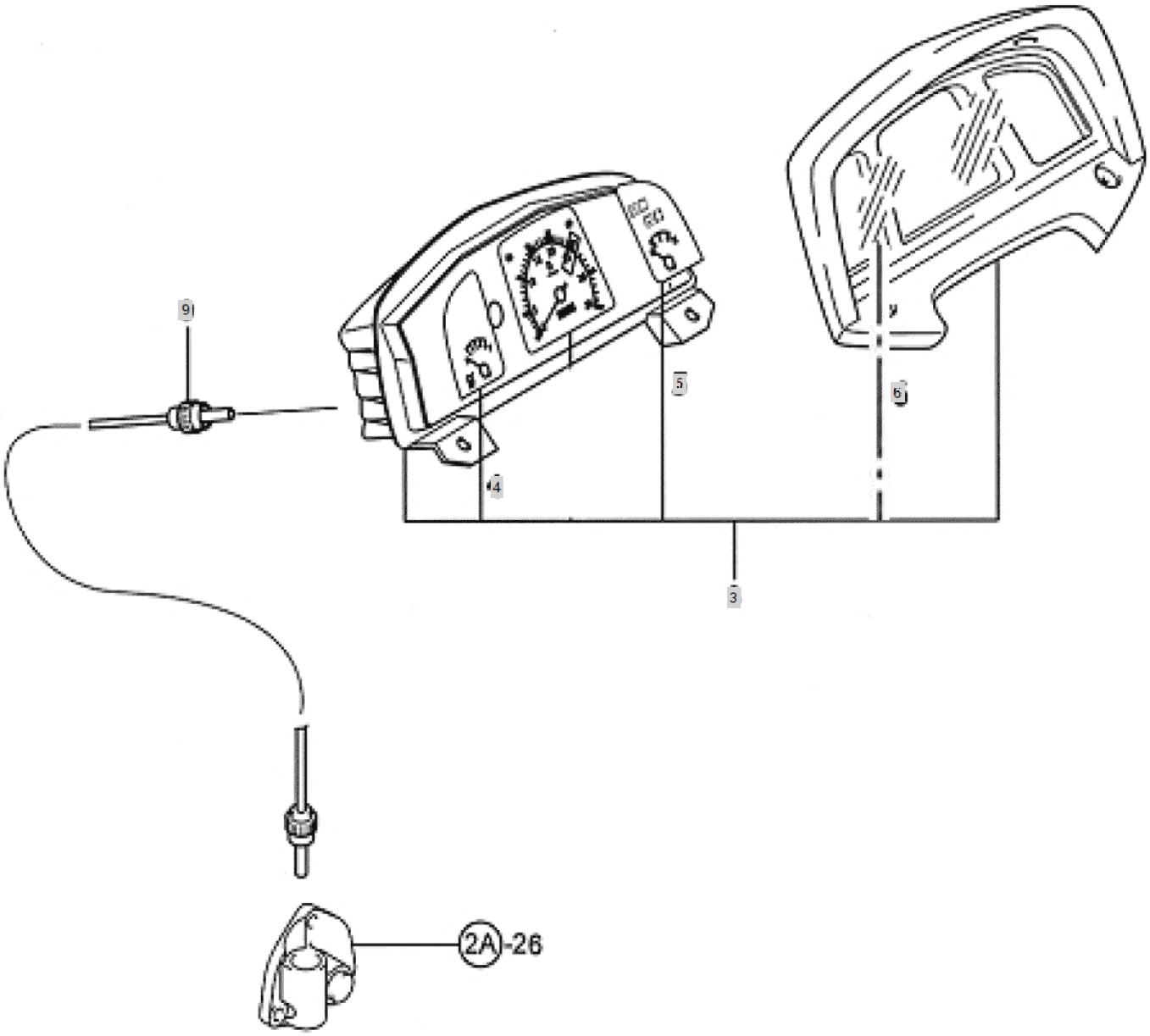

FIG 134 3520	METER ASS'Y	Year/Month 2020/02

KeyNo.	Part Number	Part Name	Quantity	Other
3	NTD4010000A2	METERASS`Y	1	
4	NTD4010600A9	FUEL MOVEMENT	1	
5	NTD4011300A9	TEMP MOVEMENT	1	
6	NTD4010300A9	GLASS INSERT, DASH METER (N/A)	1	
9	NTD4320000A3	CABLE,HOURMETER	1	

FIG 136 3520	HOOD & SIDE PANEL	Year/Month 2020/02

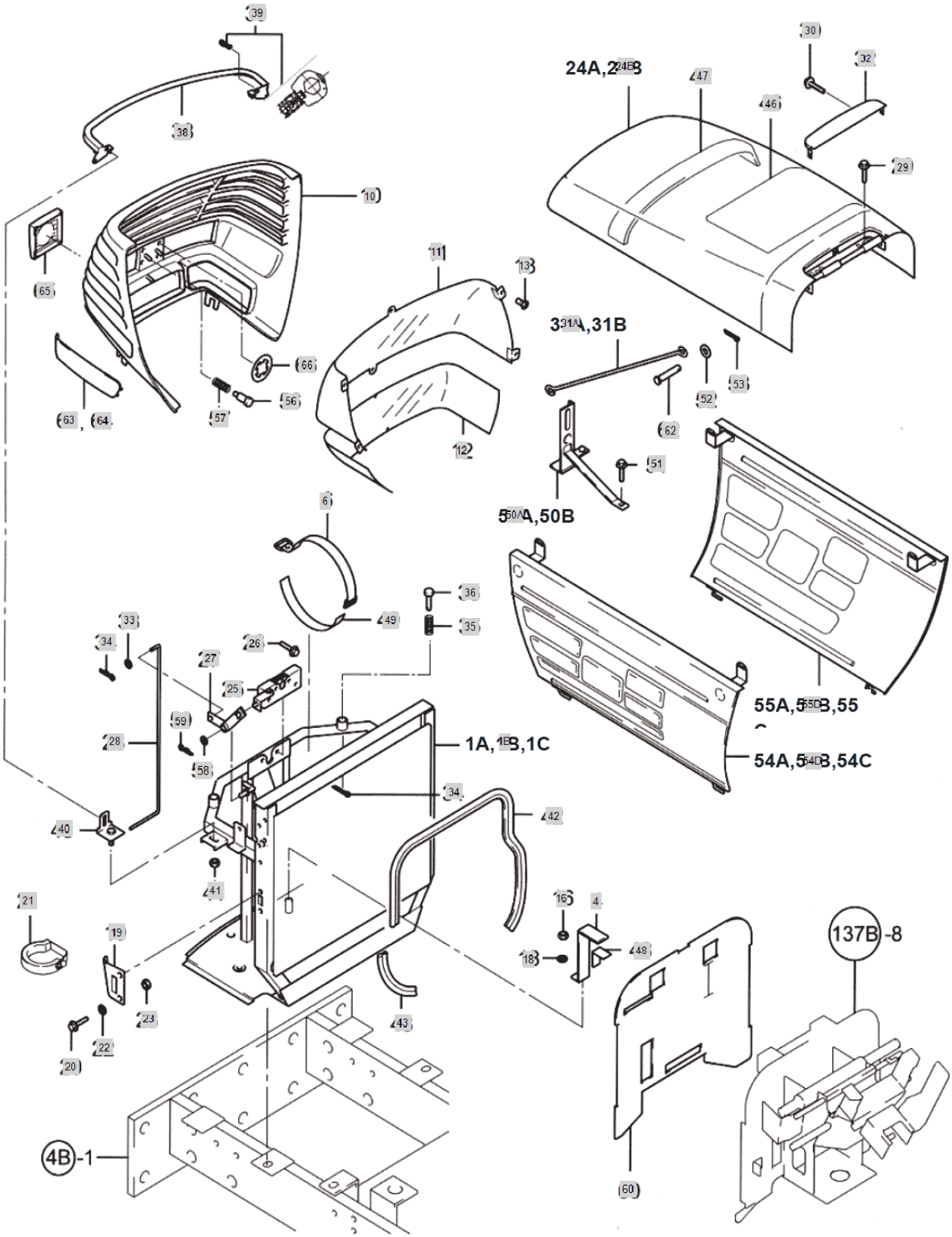

FIG 136 3520	HOOD & SIDE PANEL	Year/Month 2020/02

KeyNo.	Part Number	Part Name	Quantity	Other
1B	NTD601H000A0		1	
4	NTD6600000A4	SUPPORTPLATE,BATTERY	1	
6	TZD6890000A4	BAND,AIRCLEANERHOLDING	1	
10	NTD610E000A9	FRONT MASK ASSY	1	
11	NTD6100500A3	MESH PLATE (UPPER)	1	
12	NTD6100600A3	MESH PLATE (LOWER)	1	
13	TTD7090000A4	CROSSRECESSEDHEADTAPPINGSCREW	14	
16	26716-080002	NUT,HEX (D8)	2	
18	22217-080000	WASHER, SPRING (Φ 08)	1	
19	NTD6190000B4	SUBTANK STAY ASSY	1	
20	26106-080202	SQR FLANGE BOLT	2	
21	CA09310000A4	STRAP,SUBTANKMTG	1	
22	22217-080000	WASHER, SPRING (Φ 08)	2	
23	26716-080002	NUT,HEX (D8)	2	
24B	NTD624H000A4	BONNETASS'Y	1	
25	NTD6560000B3	LOCK UNIT, HOOD	1	
26	26106-060302	Bolt, Hexa (6-30)	2	
27	NTD6580000A4	HINGEBRACKETASS`Y	1	
28	NTD6590000A4	PRESSBAR	1	
29	26106-080162	SCREW,HEXFLANGEHEADCAP	3	
30	26106-060122	HEX BOLT (6-12)	3	
31A	NTD6500000A4	STAND(BONNET)	1	
32	NTD6300000A2	BONNETCOVER	1	
33	22137-080000	WASHER, PLAIN (Φ 08)	1	
34	22372-080000	PIN , SNAP (08Φ)	1	
35	NTD6420000A4	CUSHION, SPRING	2	
36	NTD6430000A4	PIN,BONNETCUSION	2	
37	26367-080002	HEX FLANGE NUT (Φ8)	4	
38	NTD6110000A3	FRONTMASKHOLDER	1	
39	TC53110000A4	CAMLOCK	4	
40	NTD6410000A4	FIXINGBRACKET	2	
41	26367-060002	Nut, Hexa (Φ6)	2	
42	NTD6610000A4	STRIP	1	
43	NTD6620000A4	STRIPB	1	
46	TZD6870000A4	INSULATOR,BONNET	1	
47	NTD6630000A4	BONNETURETHANE	1	
48	NTD6640000A4	URETHANE,BAT.HOLDER	1	
49	TZD6880000A4	AIRCLEANERPAD	1	
50A	NTD6510000A3	STANDBRACKETASS`Y	1	
51	26106-060122	HEX BOLT (6-12)	1	
52	22137-080000	WASHER, PLAIN (Φ 08)	1	
53	22417-200300	PIN , COTTER (2-30)	1	
54B	NTD636H000A0	SIDECOVERASS`Y(L)	1	
55B	NTD637H000A0		1	
56	TCE1250000A4	BOLTM5	6	

FIG 136 3520	HOOD & SIDE PANEL	Year/Month 2020/02

KeyNo.	Part Number	Part Name	Quantity	Other
57	TCE1080000A4	SPRING1.2	6	
58	22137-080000	WASHER, PLAIN (Φ 08)	2	
59	22360-080000	PIN , SNAP (8Φ)	1	
60	NTD6450000A2	HEATINSULATOR	1	
61	26367-060002	Nut, Hexa (Φ6)	2	
62	22487-080300	PIN, HEAD (08-30)	1	
63	NTD6100200A3	SIDELENS(R)	1	
64	NTD6100300A3	SIDELENS(L)	1	
65	NTD6100400A3	CENTERLENS	6	
66	TC53150000A4	SPEEDNUT5	4	
67	NTD6670000A4	DASHBOARDL	1	
68	TC53130000A4	CUSHION, RUBBER	4	

FIG 137 3520	DASH BOARD	Year/Month 2020/02

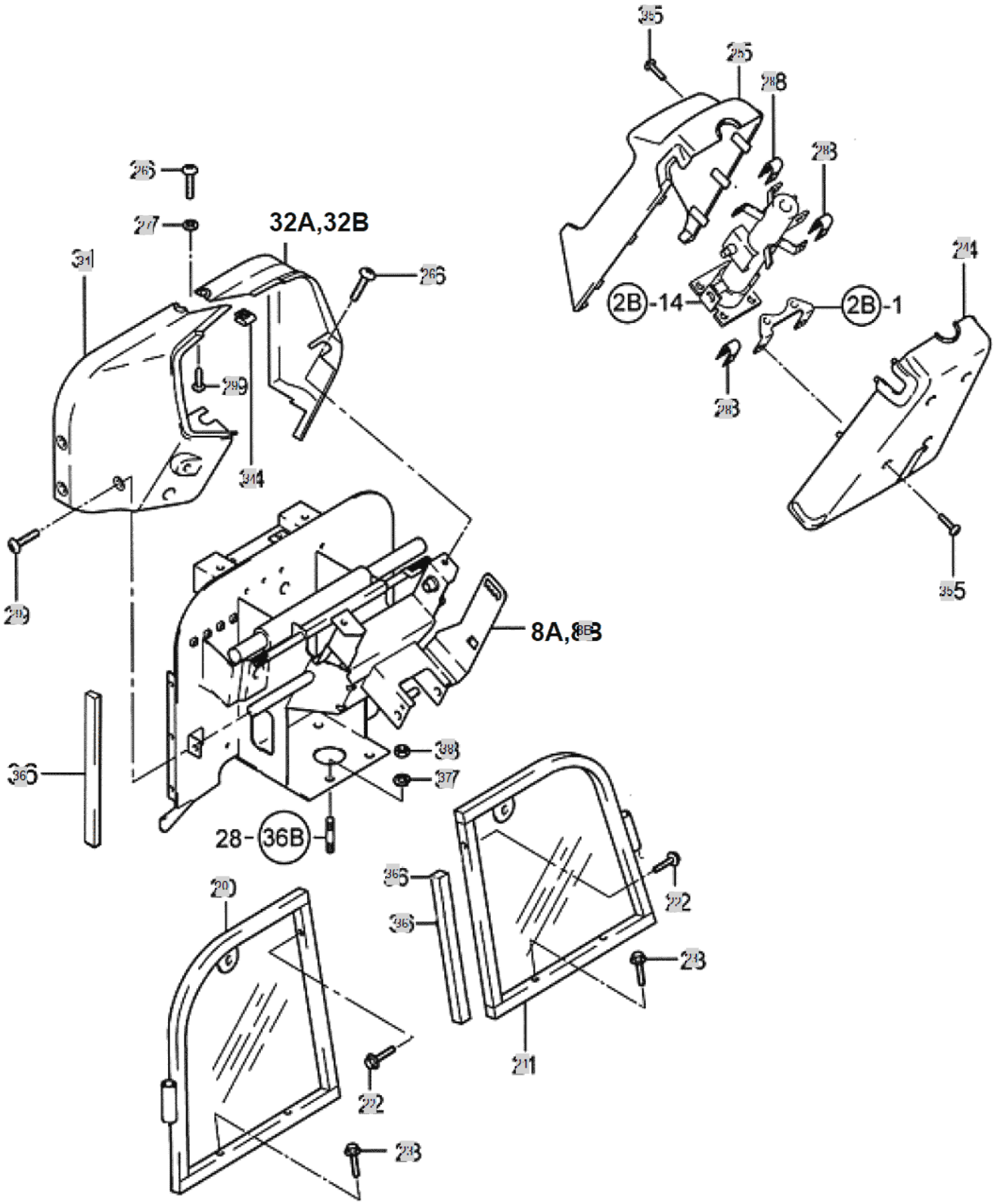

FIG 137 3520	DASH BOARD	Year/Month 2020/02

KeyNo.	Part Number	Part Name	Quantity	Other
8B	NTD706H000A0		1	
20	NTD7250000A2	WINDPROTECTIONASS`Y(L)	1	
21	NTD7260000A2	WINDPROTECTION(R)ASS`Y	1	
22	26106-080302	HEX BOLT, FLANGE	2	
23	26106-080452	HEX FLANGE BOLT 8X45	4	
24	TCE9060000A1	COLUMN COVER R	1	
25	TCE9050000A1	COLUMN COVER F	1	
26	TCE9020000A4	BOLT(BC)	3	
27	TCE9130000A4	WASHER	1	
28	TTD7110000A4	SPEEDNUTNS5008	6	
29	TCE9010000A4	BOLT	6	
31	NTD7010000A0	DASHBOARD(L)	1	
32	NTD7020000A0	DASH BOARD (RH)	1	
34	TCE9150000A4	SPEEDNUTM6	2	
35	TTD7090000A4	CROSSRECESSEDHEADTAPPINGSCREW	8	
36	NTD7360000A4	URETHANE,WINDPROTECTION	2	
37	22217-120000	WASHER, SPRING (Φ 12)	4	
38	26716-120002	BOLT,CYLINDER HEAD(B)	4	

FIG 138 3520	FENDER	Year/Month 2020/02

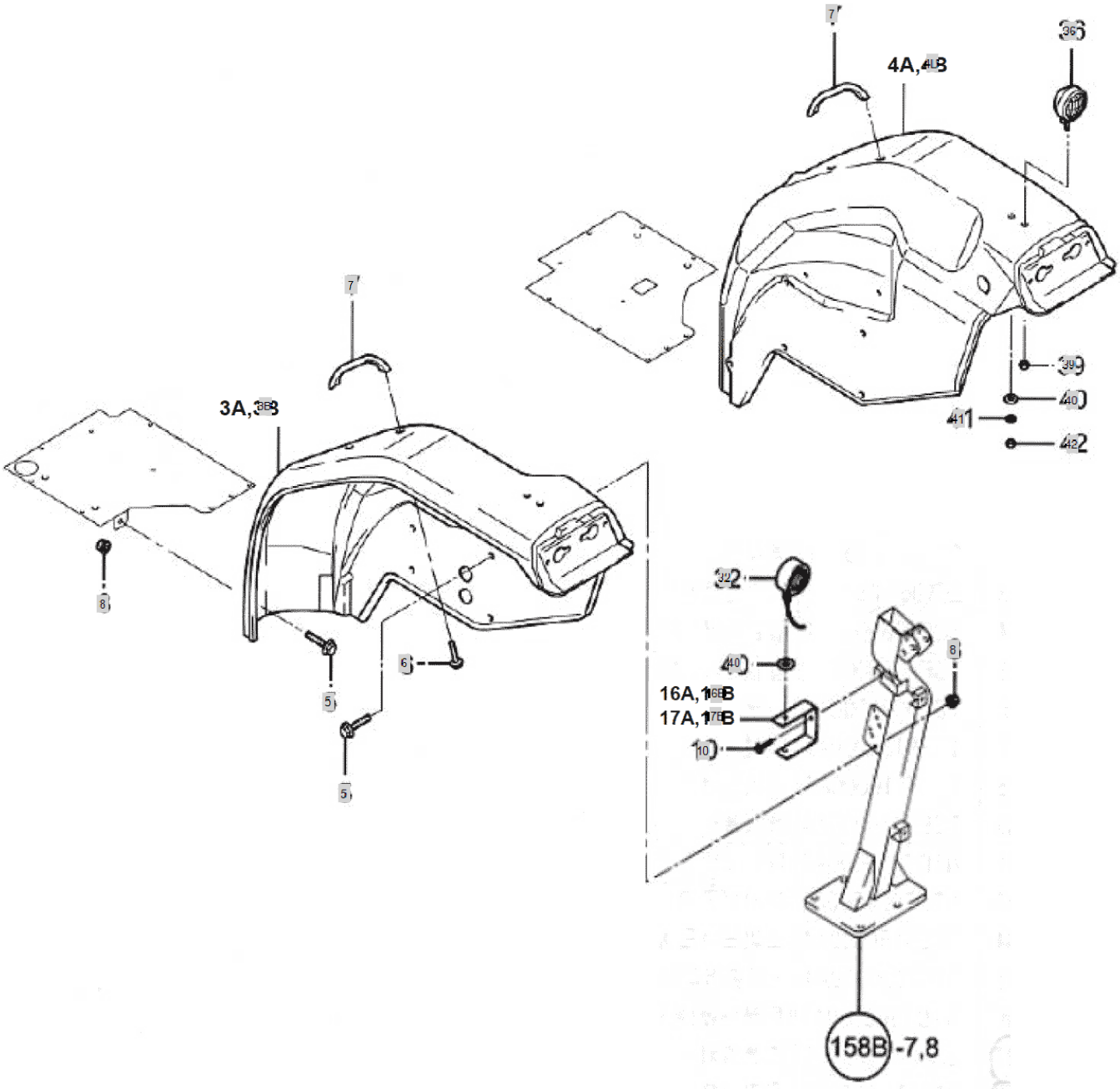

FIG 138 3520	FENDER	Year/Month 2020/02

KeyNo.	Part Number	Part Name	Quantity	Other
3B	NTD803Y000E0	FENDER ASS'Y, L	1	
4B	NTD804Y000E0	FENDER ASS'Y, R	1	
5	26106-080162	SCREW,HEXFLANGEHEADCAP	6	
6	26106-080122	Bolt, Hexa (8-12)	4	
7	NTD8120000A3	FENDERGRIP	2	
8	26367-080002	HEX FLANGE NUT (Φ8)	6	
10	26106-080162	SCREW,HEXFLANGEHEADCAP	6	
16B	NTD816H000A3	SUPPORT(L),FENDER	1	
17B	NTD817H000A3	SUPPORT(R),FENDER	1	
32	TZD2120000C3	DIRECTION LAMP	2	
36	CEG6250000A2	Lamp Ass'y, Working	1	
39	26367-080002	HEX FLANGE NUT (Φ8)	1	
40	22127-120000	WASHER, PLAIN (Φ 12)	4	
41	22217-120000	WASHER, SPRING (Φ 12)	2	
42	26716-120002	BOLT,CYLINDER HEAD(B)	2	

FIG 140 3520	SEAT	Year/Month 2020/02

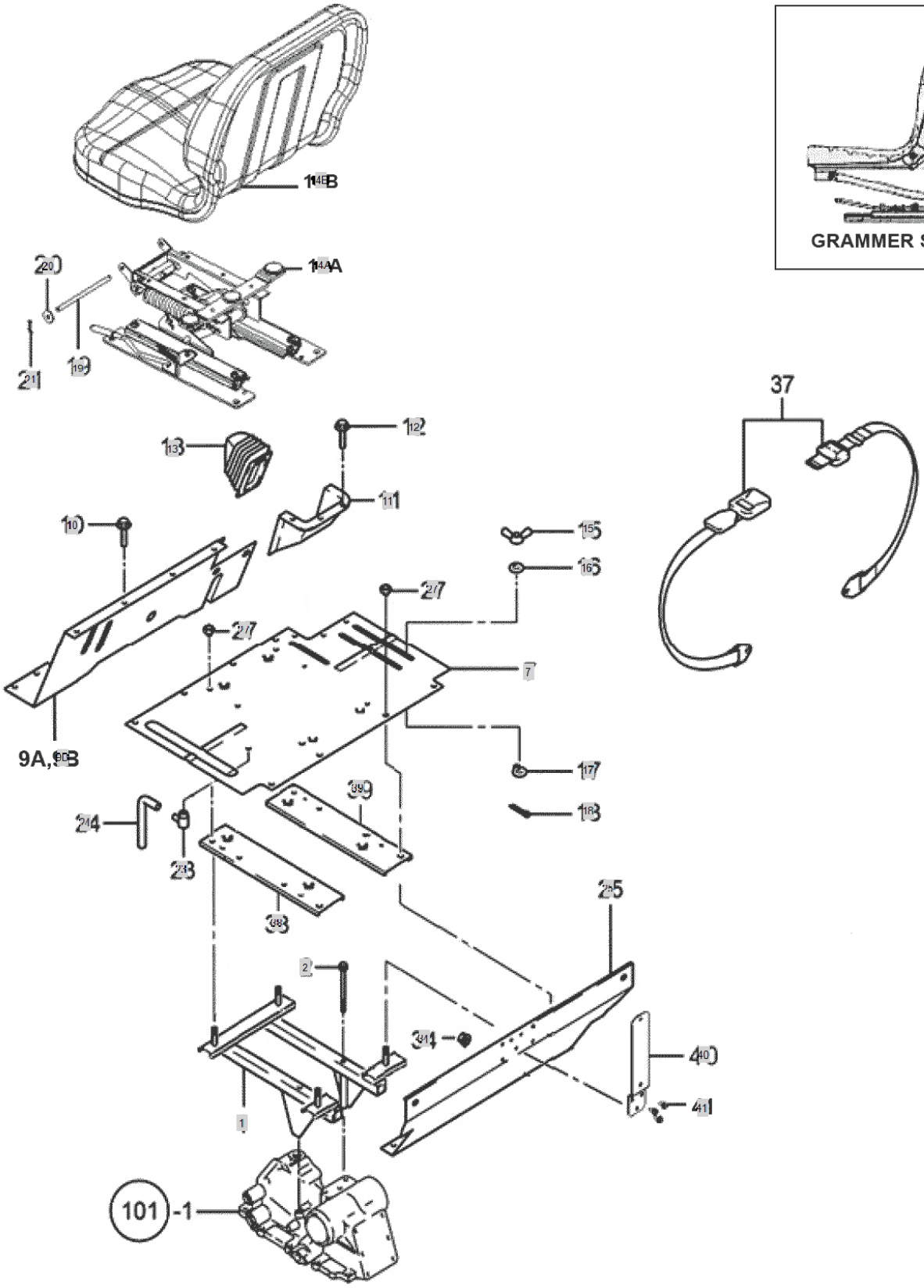

FIG 140 3520	SEAT	Year/Month 2020/02

KeyNo.	Part Number	Part Name	Quantity	Other
1	NTE0010000E2	B/K, SEAT FRAME	1	
2	26106-081352	FLANGBOLT	2	
6	26106-080402	SCREW,HEXFLANGEHEADCAP	2	
7	NTE0240000D2	COVER, SEAT FRAME	1	
9B	NTE017Y000B1	COVERASS'Y,DUST	1	
10	26106-080122	Bolt, Hexa (8-12)	7	
11	NTE0230000A2	LEVERGUIDE,MAINSHIFT	1	
12	26106-060162	HEXFLANGEBOLT	6	
13	NTE0140000A2	BOOTS,MAINSHIFT	1	
14A	NTE0435021A1	SUSPENSIONASS'Y	1	
14B	NTE0435011A1		1	
15	TTE0110000A4	BOLT, BUTTERFLY	2	
16	TTE0120000A9	WASHER	2	
17	TTE0080000A4	STOPPER	2	
18	22417-200200	PIN , COTTER (2-20)	2	
19	TCF5100000A4	PIN.	1	
20	22157-080000	WASHER, PLAIN (Φ 08)	2	
21	RR64050000A4	Pin, Come-Off Snap (Φ8)	2	
23	TB43640000A4	AIRBREEDERASS'Y	1	
24	TTE0310000A4	PIPE,AIRBREETHER	1	
25	NTE0920000A2	COVERASS'Y,REAR	1	
27	26367-100002	NUT,HEXAGONFLANGE	4	
34	TTE0230000B3	SEAT SAFETY BELT	1	
35	NTE0410000A2	GRAMMERSEATASS'Y	1	
38	NTE0270000D3	SUPPORT, SEAT FRAME L(UPPER)	1	
39	NTE0370000D3	SUPPORT, SEAT FRAME R(UPPER)	1	
40	TZE1040003B3	SMV BRACKET ASS'Y	1	
41	26106-060142	BOLT	1	

FIG 141 3520	FUEL TANK	Year/Month 2020/02

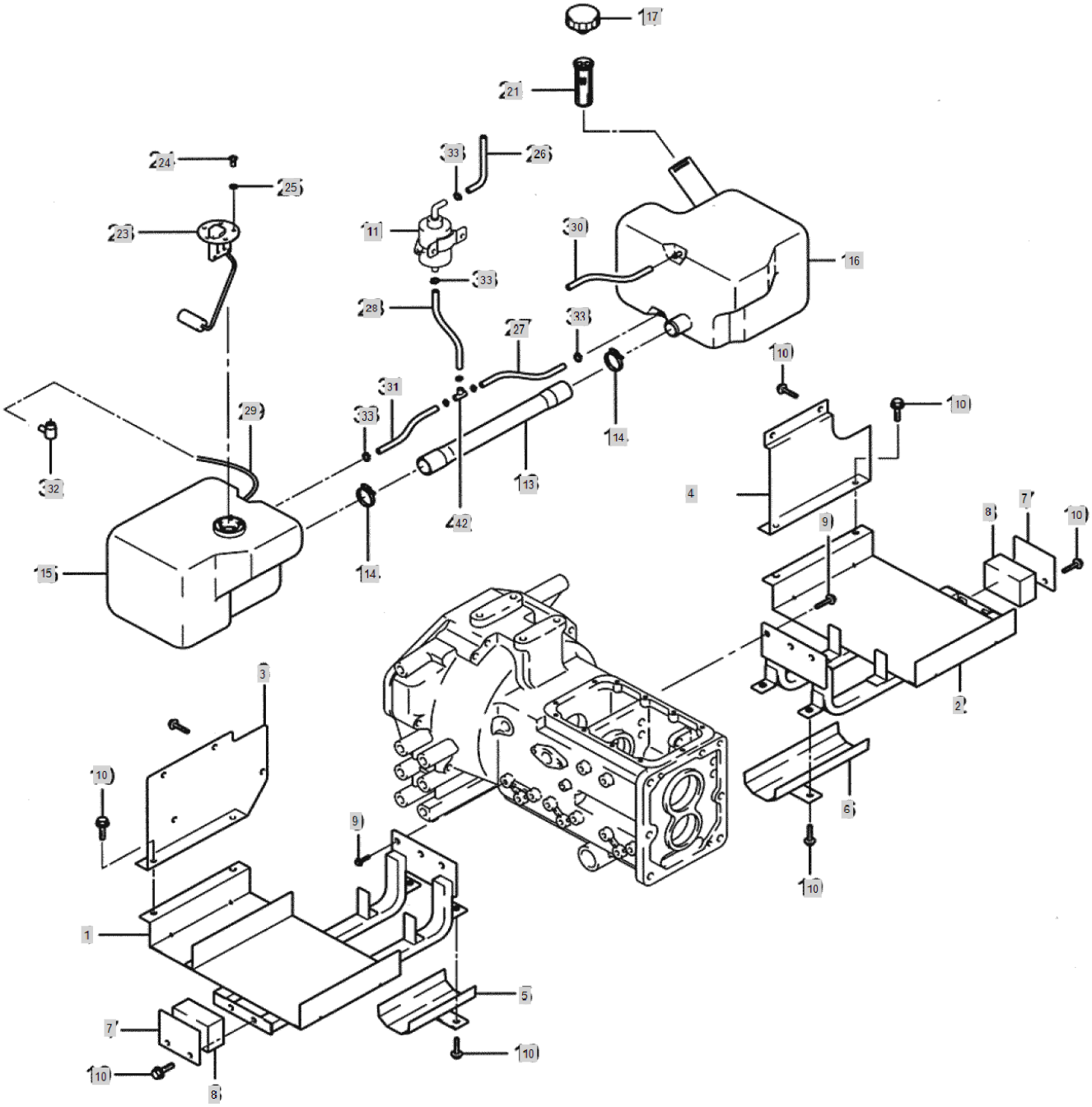

FIG 141 3520	FUEL TANK	Year/Month 2020/02

KeyNo.	Part Number	Part Name	Quantity	Other
1	NTE1510000A1	SUPPORTL,FUELTANK	1	
2	NTD9380000A2	FUELTANKSTAY(R)	1	
3	NTD9400000A3	FUELTANKCOVER(L)	1	
4	NTD9410000B3	FUELTANKCOVER(R)	1	
5	NTD9350000A3	FUELHOSECOVER(L)	1	
6	NTD9360000A3	FUELHOSECOVER(R)	1	
7	NTD9390000A4	SIDEHOLDER	2	
8	NTD9430000A4	FUELTANKURETHAN	2	
9	26106-100202	HEX BOLT, (10-20)	6	
10	26106-080162	SCREW,HEXFLANGEHEADCAP	12	
11	NTE1110000A3	FEED PUMP, FUEL	1	
13	NTE1140000A3	FUELTANKHOSE	1	
14	23000-054000	HOSECLAMP54	2	
15	NTE1010000A0	FUELTANK[L]	1	
16	N/A	SEE COMMENTS.	1	
17	NTE1170000A3	CAP,FUELTANK	1	
21	TNE11800A0A9	STRAINERFUEL	1	
23	NTE1380000A9	SENSOR,FUEL	1	
24	26716-050002	Nut, Hexa (Φ5)	5	
25	22217-050000	WASHER, SPRING (Φ 05)	5	
26	TA00055012A	HOSE, FUEL	1	
26-1	23980-730250	FLOAT HOSE	1	DELETE
27	23980-730570	HOSER/T-TJ	1	
28	23980-730980	FLOAT HOSE	1	
29	23980-730950	FLOATHOSE	1	
30	23980-730740		1	
31	23980-730200	HOSEL/T-T/J	1	
32	TB43640000A4	AIRBREEDERASS'Y	1	
33	23000-016000	Clip, Hose (Φ16)	9	
34	23000-013000	Clip, Hose (Φ13)	2	
42	TC51080000A4	T-JOINT	1	
43	TTC4010000A4	TANKRUBBER,DUSTPROOF	2	

FIG 144 3520	DECAL	Year/Month 2020/02

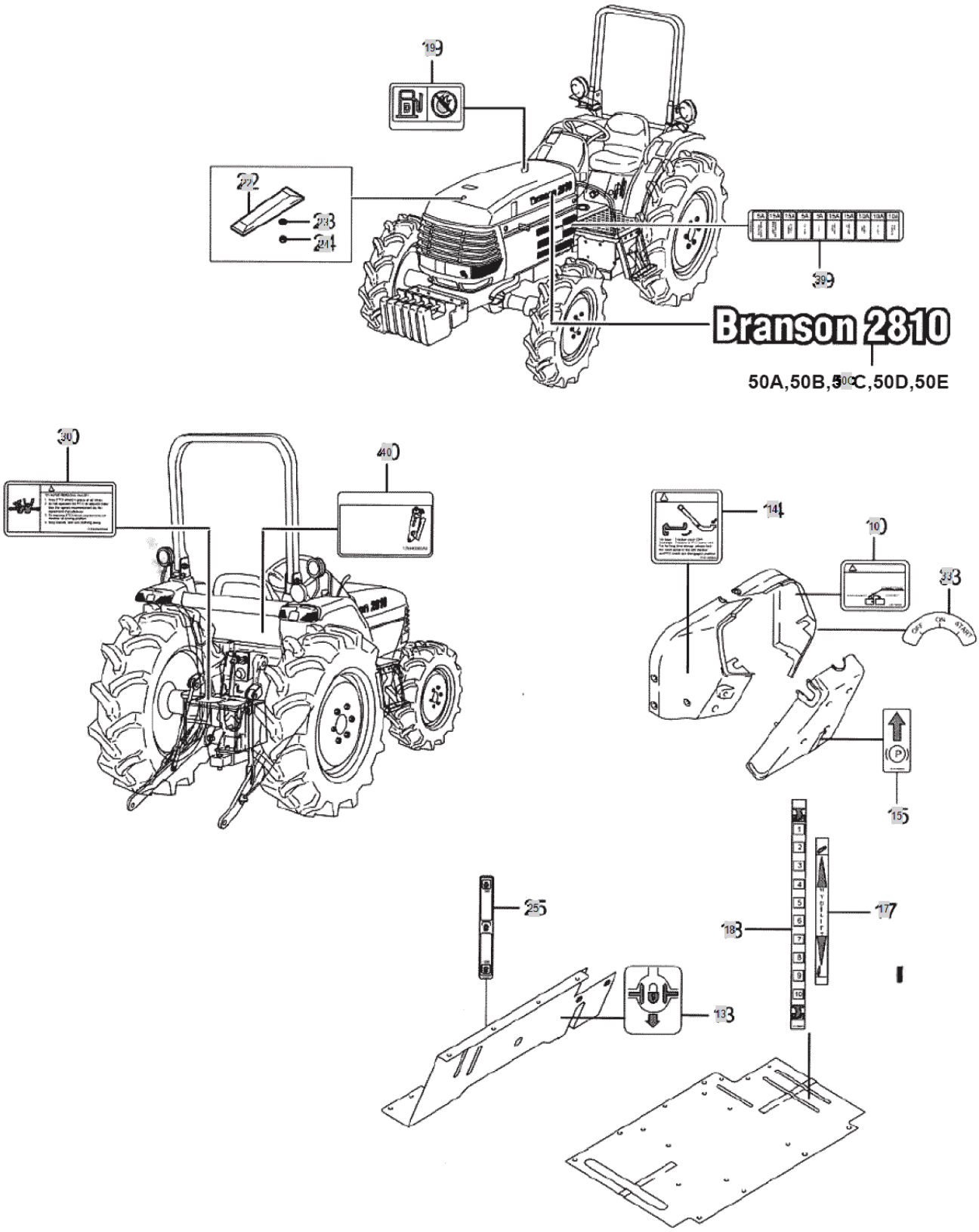

FIG 144 3520	DECAL	Year/Month 2020/02

KeyNo.	Part Number	Part Name	Quantity	Other
10	TZE4100000B4	LABEL,BRAKEPEDAL	1	
13	TZE4130000B4	LABEL,DIFFERENTIAL	1	
14	NTE4140000B4	NAMEPLATE,USINGCLUTCH	1	
15	TZE4150000A4	LABEL, PAKING BRAKE	1	
17	TZE4170000B4	LABEL,HYDLIFT	1	
18	TZE4180000A4	LABEL,DRAFTDEPTH	1	
19	TZE4190000C4	LABEL, FUEL CAUTION	1	
22	TCF8100000A4	TOPMARK	1	
23	TTD6440000A4	CUSHION, RUBBER	2	
24	TB41290000A4	NUT	1	
25	TZE4250000A4	NAMEPLATE,PTO1~2	1	
30	TZE4300000A4	NAMEPLATE,PTOCAUTION	1	
33	TZE4330000A4	LABEL,KEYS/W	1	
39	TZE4390000A4	LABEL,FUSE	1	
40	TZE4400000A4	NAMEPLATE,DRAFT	1	
50C	NTE450H000A1	NAMEPLATE,BONNET(3520)	2	

FIG 145 3520	DECALS	Year/Month 2020/02

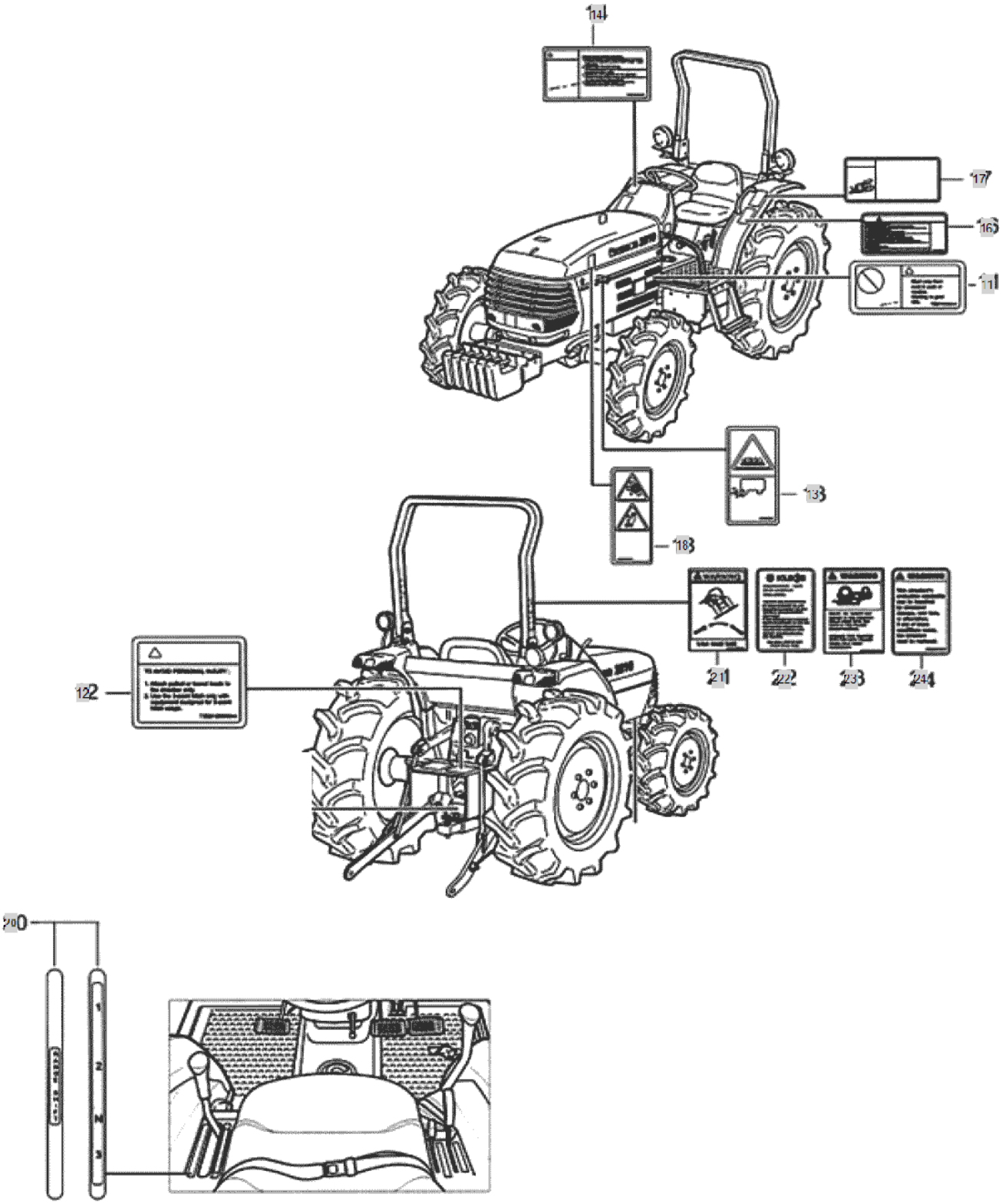

FIG 145 3520	DECALS	Year/Month 2020/02

KeyNo.	Part Number	Part Name	Quantity	Other
11	TZE5110000B4	NAMEPLATE,STARTERWARNING	1	
12	TZE5120000B4	NAME PLATE, EQUIP	1	
13	TZE5130000C4	NAME PLATE, CAUTION	1	
14	TZE5140000B3	NAME PLATE, DOWN LOAD	1	
16	TZE5160000B3	NAME PLATE, SAFETY	1	
17	TZE5170000B3	NAME PLATE, ROPS CAUTION	1	
18	TZE5180000C4	NAME PLATE, REVOLUTION	1	
20	NTE5200000B3	NAME PLATE, RANGE SHIFT	1	
21	NTE5150000C4	NAMEPLATE,SEATBELT	1	
22	NTE5830000A4	NAME PLATE, ROPS	1	
23	NTE5210000C4	NAMEPLATE,SAFETY	1	
24	NTE5220000C4	NAMEPLATE,DANGER	1	

FIG 146 3520	TOP LINK	Year/Month 2020/02

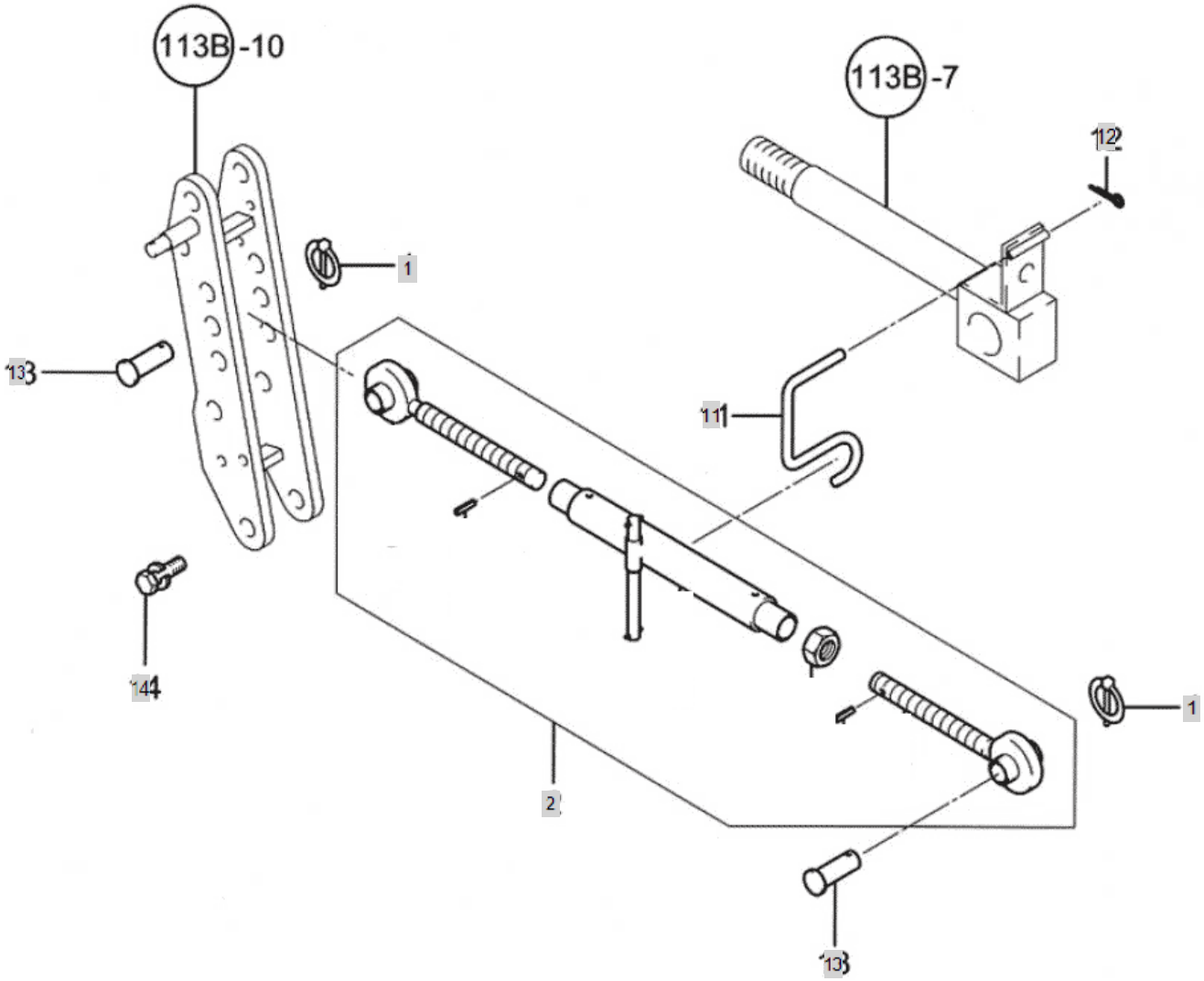

FIG 146 3520	TOP LINK	Year/Month 2020/02

KeyNo.	Part Number	Part Name	Quantity	Other
1	NT300000INA4	RING PIN ASSY'	2	
2	NTE60209INA3	TOP LINK ASSY -> TA00034892A	1	
11	TTE6110000A4	SPRING,TOPLINKHOLDING	1	
12	22417-250250	PIN , COTTER (2-25)	1	
13	TTE6130000A4	PIN	2	
14	26013-080182	SCREW,CAPTIVEWASHERCAP	2	

FIG 147A 3520	LIFT LINK R - EARLY VERSION	Year/Month 2020/02

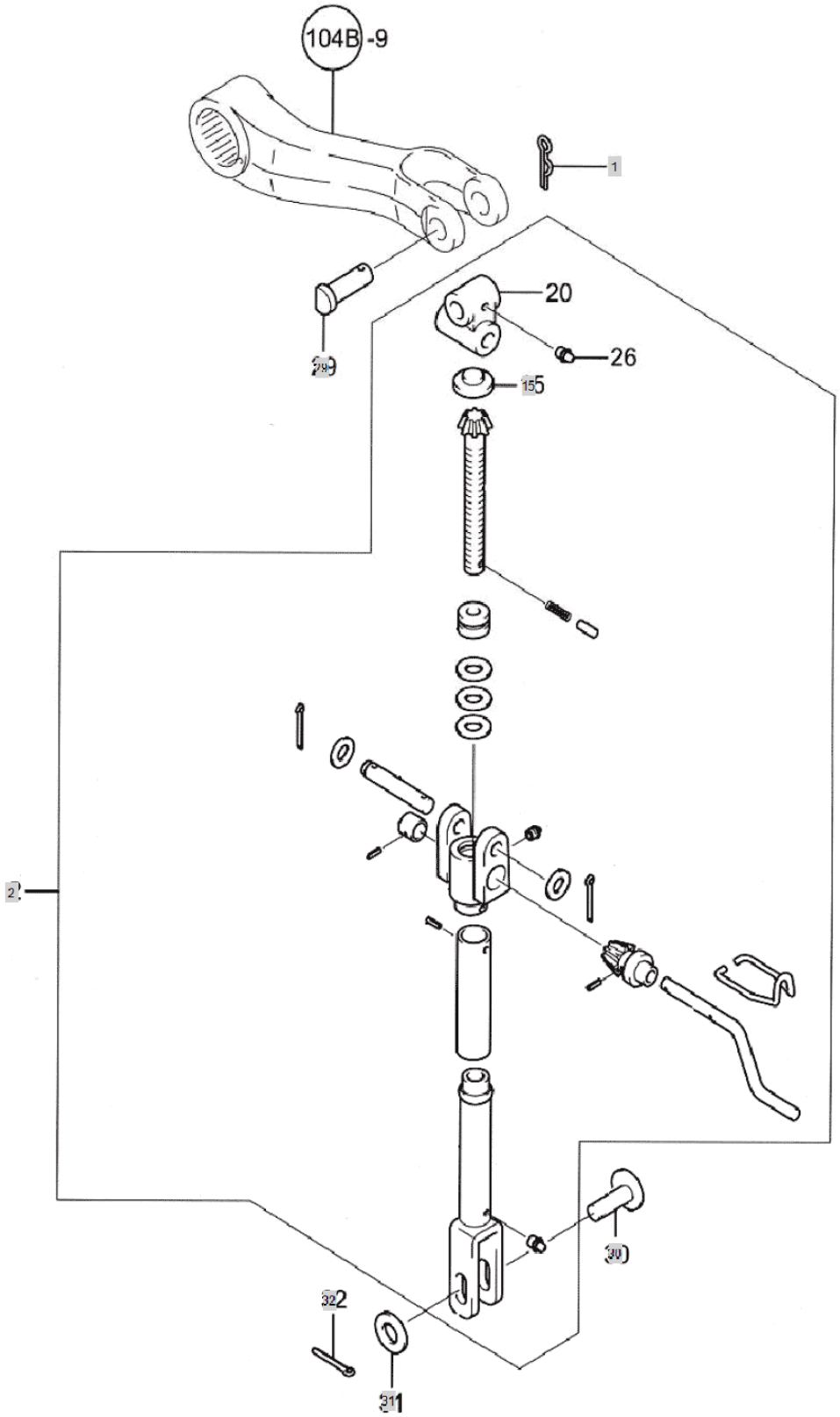

FIG 147A 3520	LIFT LINK R - EARLY VERSION	Year/Month 2020/02

KeyNo.	Part Number	Part Name	Quantity	Other
1	TTE7010000A4	SNAPPIN	1	
2	TZE7020000A2	LIFTLINK(R)	1	
15	27231-450000	PLUG,EXPANSION	1	
29	TTE7290000B4	PIN	1	
30	TZE7300000A4	PIN,LIFTLINK	1	
31	22127-160000	WASHER, SPLAIN (Φ 16)	1	
32	22417-320250	PIN , COTTER (3-25)	1	

FIG 147B 3520	LIFT LINK R - CURRENT VERSION	Year/Month 2020/02

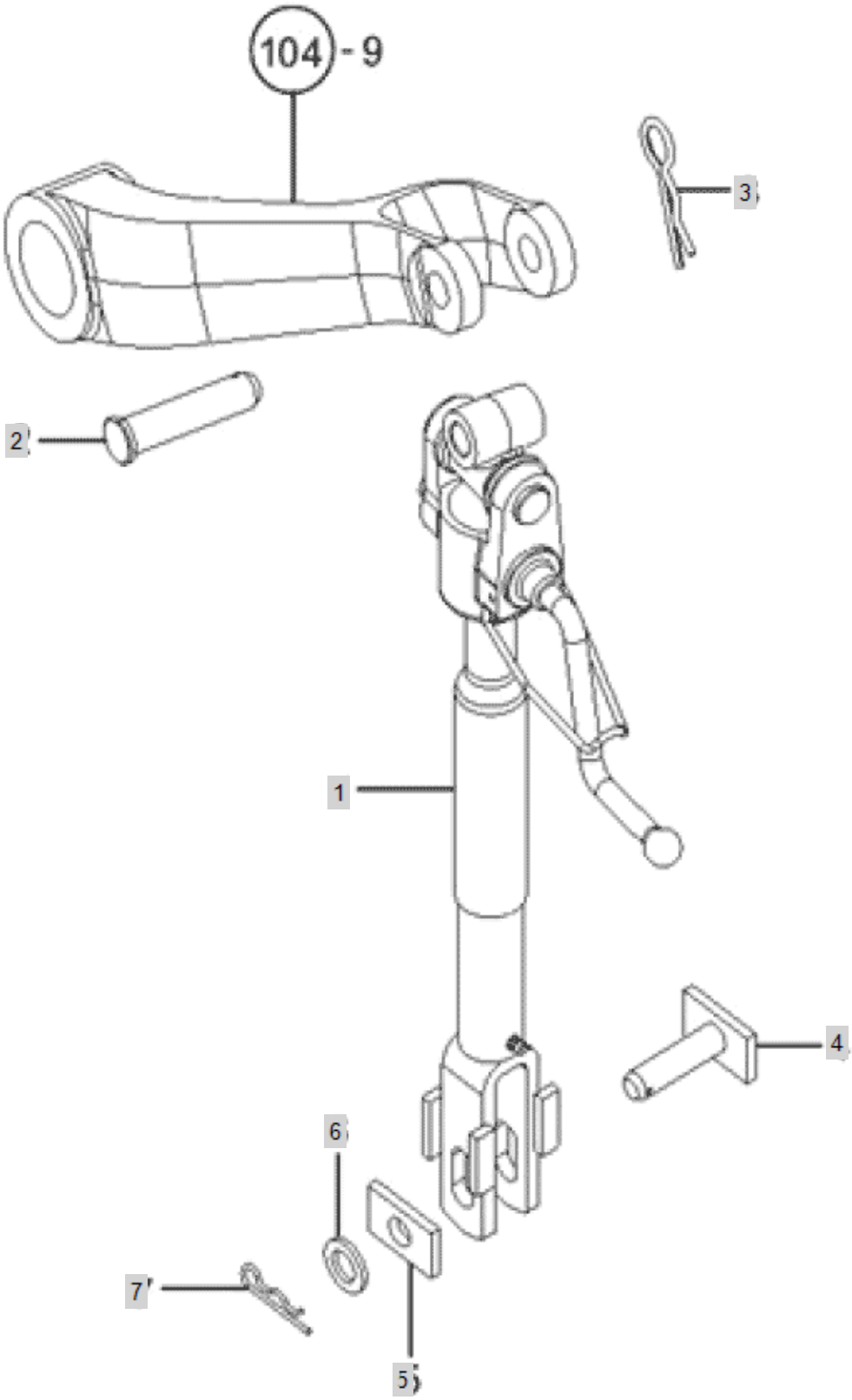

FIG 147B 3520	LIFT LINK R - CURRENT VERSION	Year/Month 2020/02

KeyNo.	Part Number	Part Name	Quantity	Other
1	NTE70200INA3	ADJUSTABLE LIFT LINK ASSY (RH)	1	
2	TTE7290000B4	PIN	1	
3	TTE7010000A4	SNAPPIN	1	
4	TTE7300000A4	PIN	1	
5	TTE7310000A4	STOPPER	1	
6	22127-160000	WASHER, SPLAIN (Φ 16)	1	
7	22360-160000	PIN , SNAP (6Φ)	1	

FIG 148A 3520	LIFT LINK L - EARLY VERSION	Year/Month 2020/02

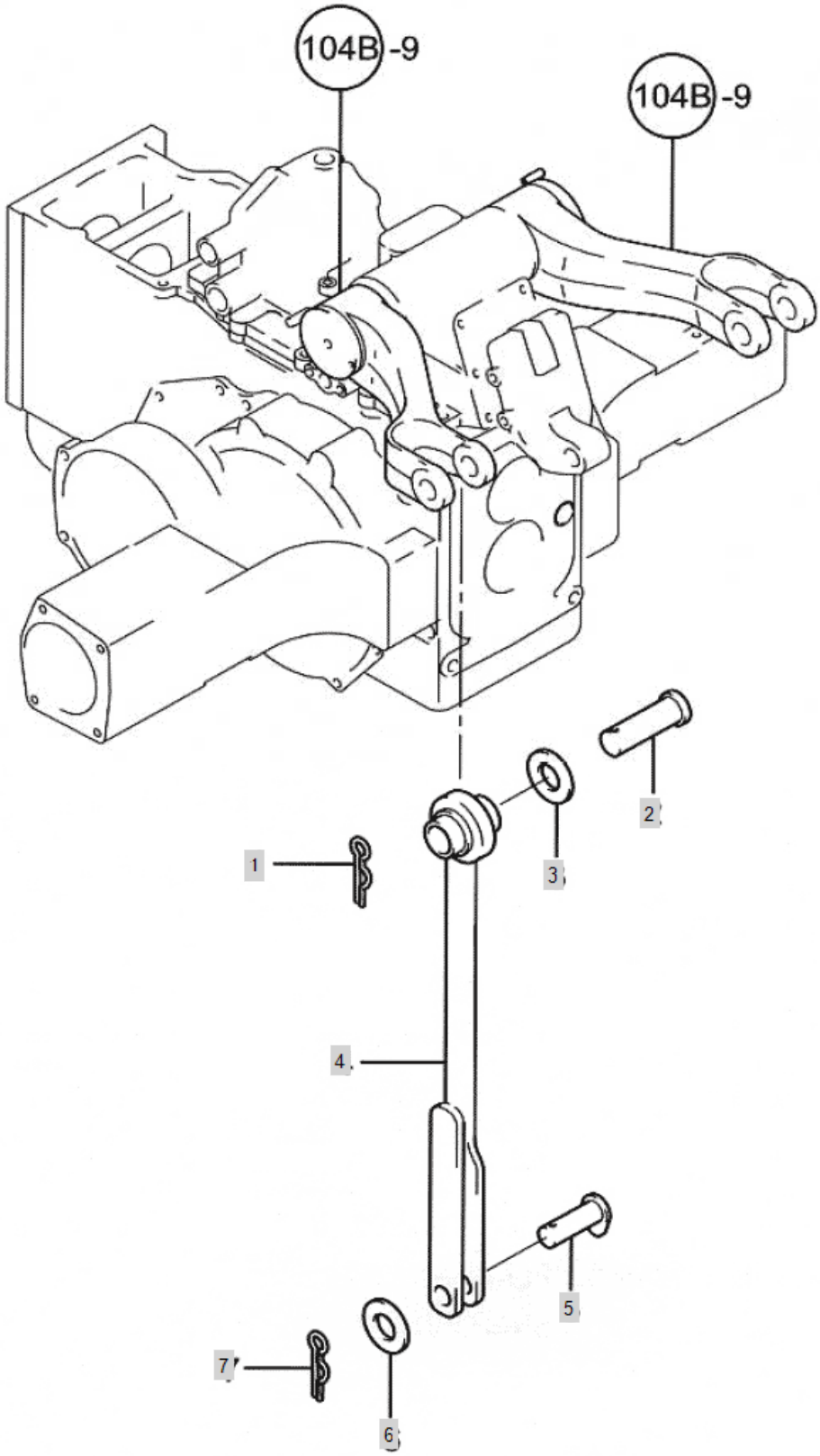

FIG 148A 3520	LIFT LINK L - EARLY VERSION	Year/Month 2020/02

KeyNo.	Part Number	Part Name	Quantity	Other
1	TTE7010000A4	SNAPPIN	1	
2	TTE7290000B4	PIN	1	
3	TTE8030000A4	WASHER	1	
4	TZE8040000A2	LIFTLINK(L)ASS`Y	1	
5	TZE7300000A4	PIN,LIFTLINK	1	
6	22137-160000	WASHER, PLAIN (Φ 16)	1	
7	22417-320250	PIN , COTTER (3-25)	1	

FIG 148B 3520	LIFT LINK L - CURRENT VERSION	Year/Month 2020/02

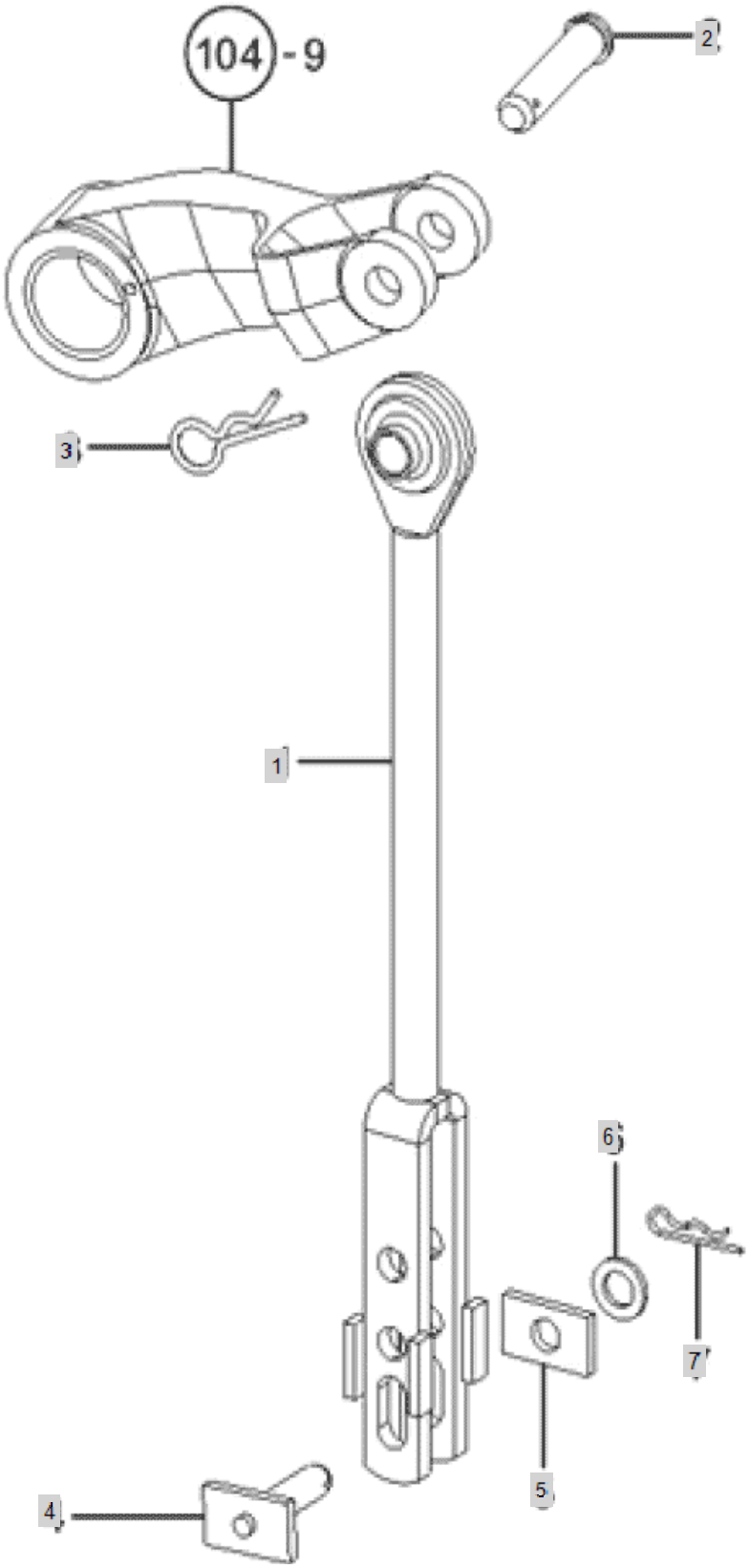

FIG 148B 3520	LIFT LINK L - CURRENT VERSION	Year/Month 2020/02

KeyNo.	Part Number	Part Name	Quantity	Other
1	NTE80400INA3	LIFT LINK ASSY (LH)	1	
2	TTE7290000B4	PIN	1	
3	TTE7010000A4	SNAPPIN	1	
4	TTE7300000A4	PIN	1	
5	TTE7310000A4	STOPPER	1	
6	22127-160000	WASHER, SPLAIN (Φ 16)	1	
7	22360-160000	PIN , SNAP (6Φ)	1	

FIG 150 3520	LOWER LINK	Year/Month 2020/02

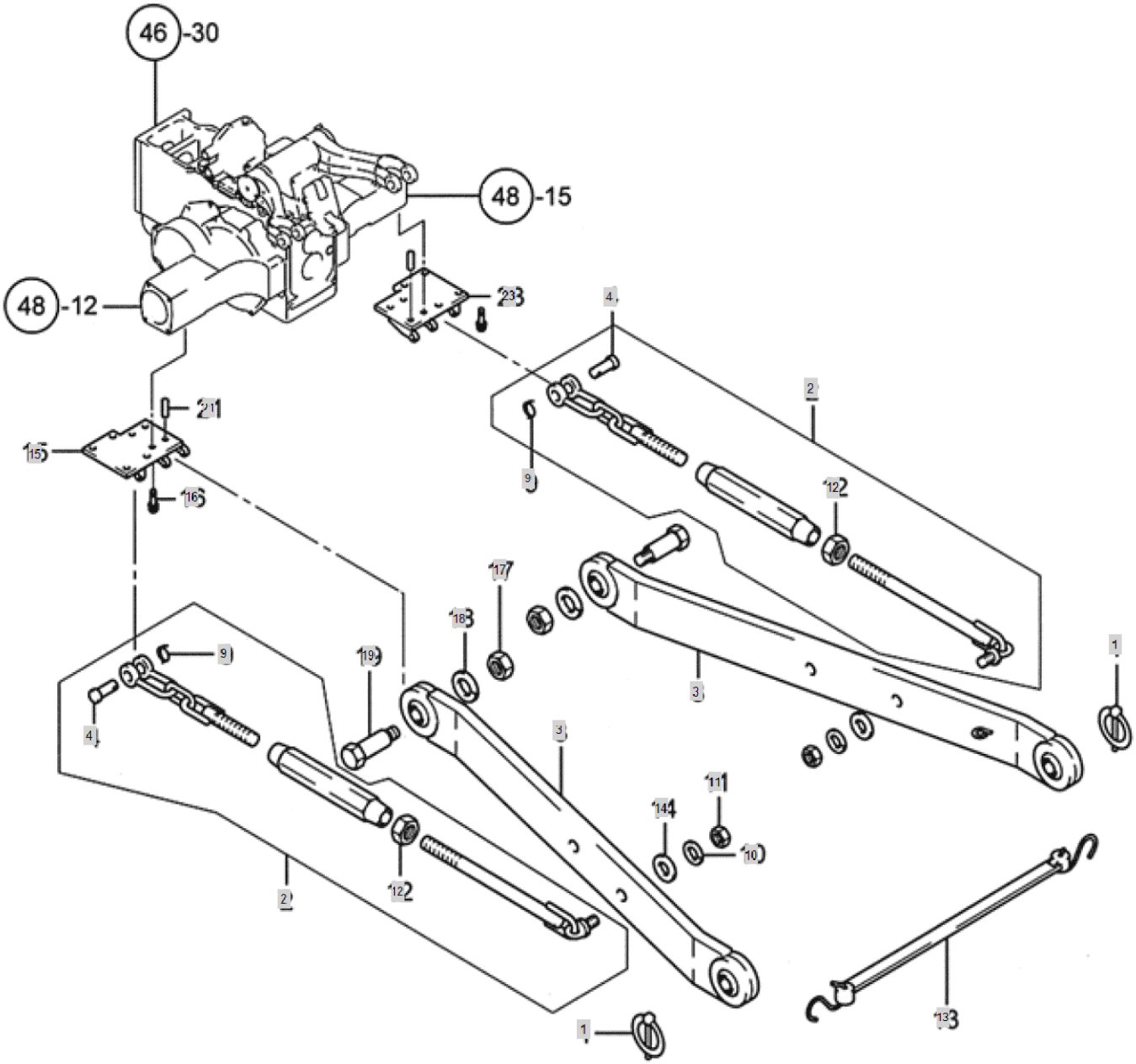

FIG 150 3520	LOWER LINK	Year/Month 2020/02

KeyNo.	Part Number	Part Name	Quantity	Other
1	TB44030000B4	RING PIN ASSY	2	
2	NTF00200INA3	CHAIN ASS'Y, CHECK	2	
3	TZF00300INC1	LOWER LINK ASSY'	2	
4	TB44510000A4	PIN	2	
9	TB46070000A4	RING	2	
10	22217-180000	WASHER, SPRING (Φ 18)	2	
11	26736-180002	NUT	2	
12	26756-160002	NUT	2	
13	TH25190000A3	RUBBERASS'Y,LINKHOLDING	1	
14	TTF0070000A4	WASHER	2	
15	TNF0150000A2	BRACKET(L)A'SSY	1	
16	26013-120302	HEX BOLT W/WASHER	6	
17	26736-160002	HEXNUT	2	
18	22217-160000	WASHER, SPRING (Φ 16)	2	
19	TB44360000A4	BOLT	2	
21	22312-120220	PIN, DOWEL (12-22)	2	
23	TNF0230000A2	BRACKET(R)A'SSY	1	
33	NTF03300IND2	LOWER LINK ASSY (LH)	1	
34	NTF03400IND2	LOWER LINK ASSY (RH)	1	

FIG 152 3520	DRAWBAR HITCH	Year/Month 2020/02

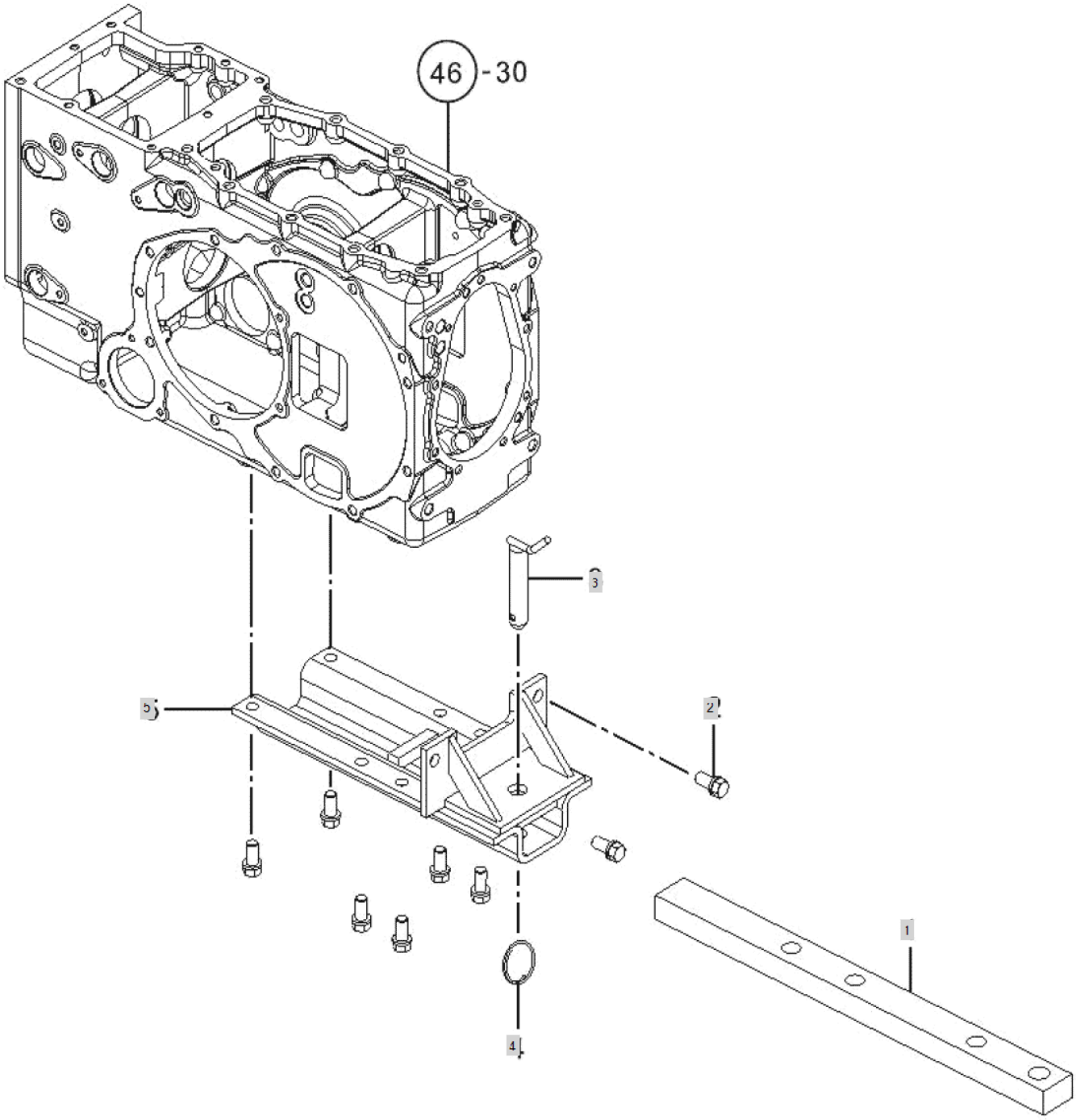

FIG 152 3520	DRAWBAR HITCH	Year/Month 2020/02

KeyNo.	Part Number	Part Name	Quantity	Other
1	NTF20100INA4	DRAW BAR	1	
2	26013-140302	BOLT(+SW)	8	
3	TB46060000A4	HITCHPIN22	1	
4	TB46070000A4	RING	1	
5	TZF2050000A1	BRACKETDRAWBARHITCH	1	

FIG 158 3520	ROPS	Year/Month 2020/02

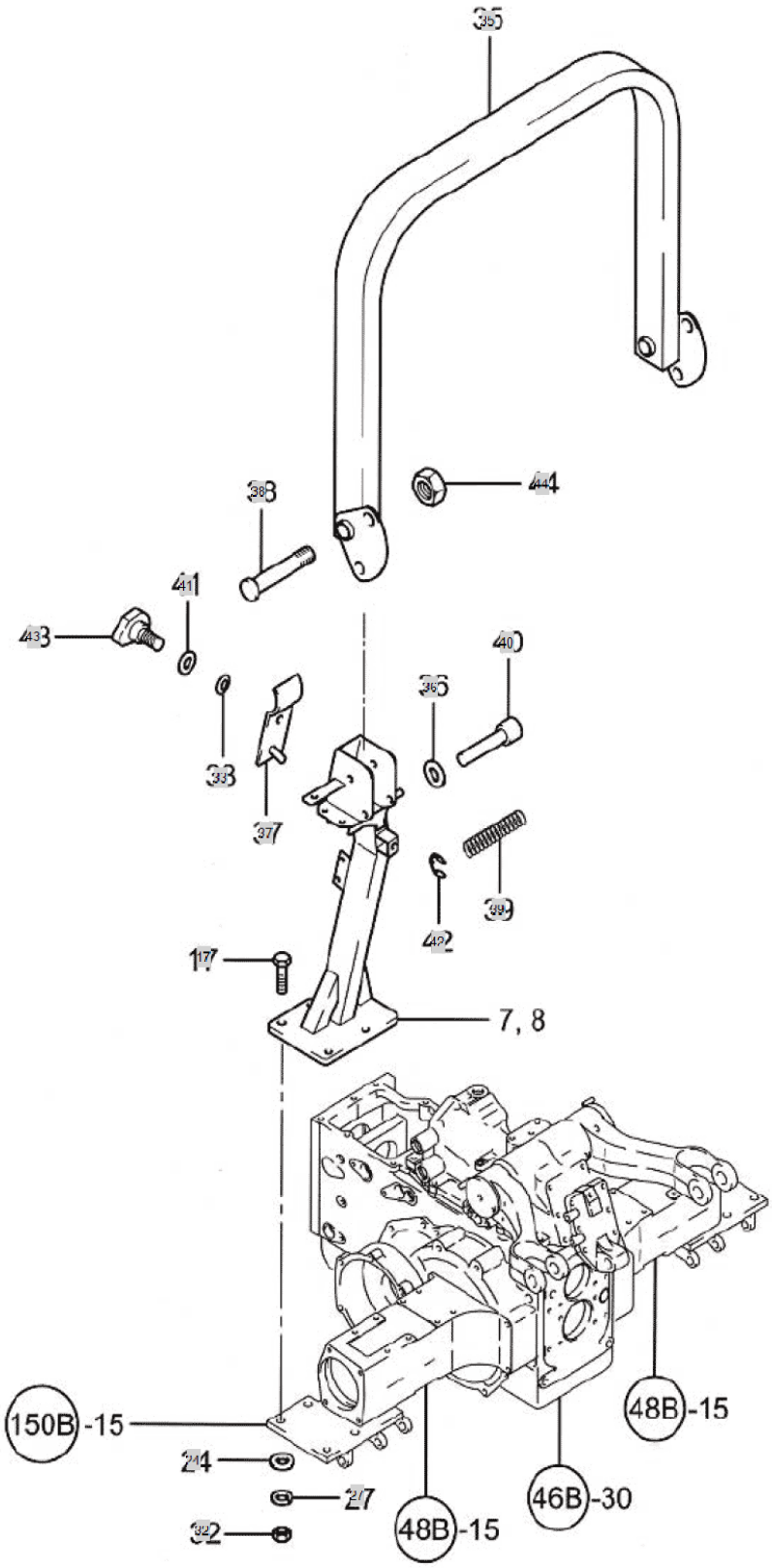

FIG 158 3520	ROPS	Year/Month 2020/02

KeyNo.	Part Number	Part Name	Quantity	Other
7B	NTF807Y000A0		1	
8B	NTF808Y000A0		1	
17	TTF8170000A4	BOLT	8	
24	22137-160000	WASHER, PLAIN (Φ 16)	8	
27	22217-160000	WASHER, SPRING (Φ 16)	8	
32	26716-160002	NUT	8	
33	TC45010000A4	SPRINGWASHER10	2	
35	TCJ5040000A3	ROPS ASSY	1	
36	TCJ5050000A4	SEAT(HOLDERPIN)	2	
37	TCJ5070000A3	FIXINGPLATE	2	
38	TCJ5090000A4	PIN16	2	
39	TCJ5100000A4	SPRING	2	
40	TCJ5110000A4	BOLTPIN	2	
41	22137-100000	WASHER, PLAIN (Φ 10)	2	
42	22272-000120	RING, CIRCLIP (Φ 12)	2	
43	TJ5150000A4	BOLT	2	
44	26356-160002	HEX U-NUT	2	

FIG 160 3520	FRONT WEIGHT	Year/Month 2020/02

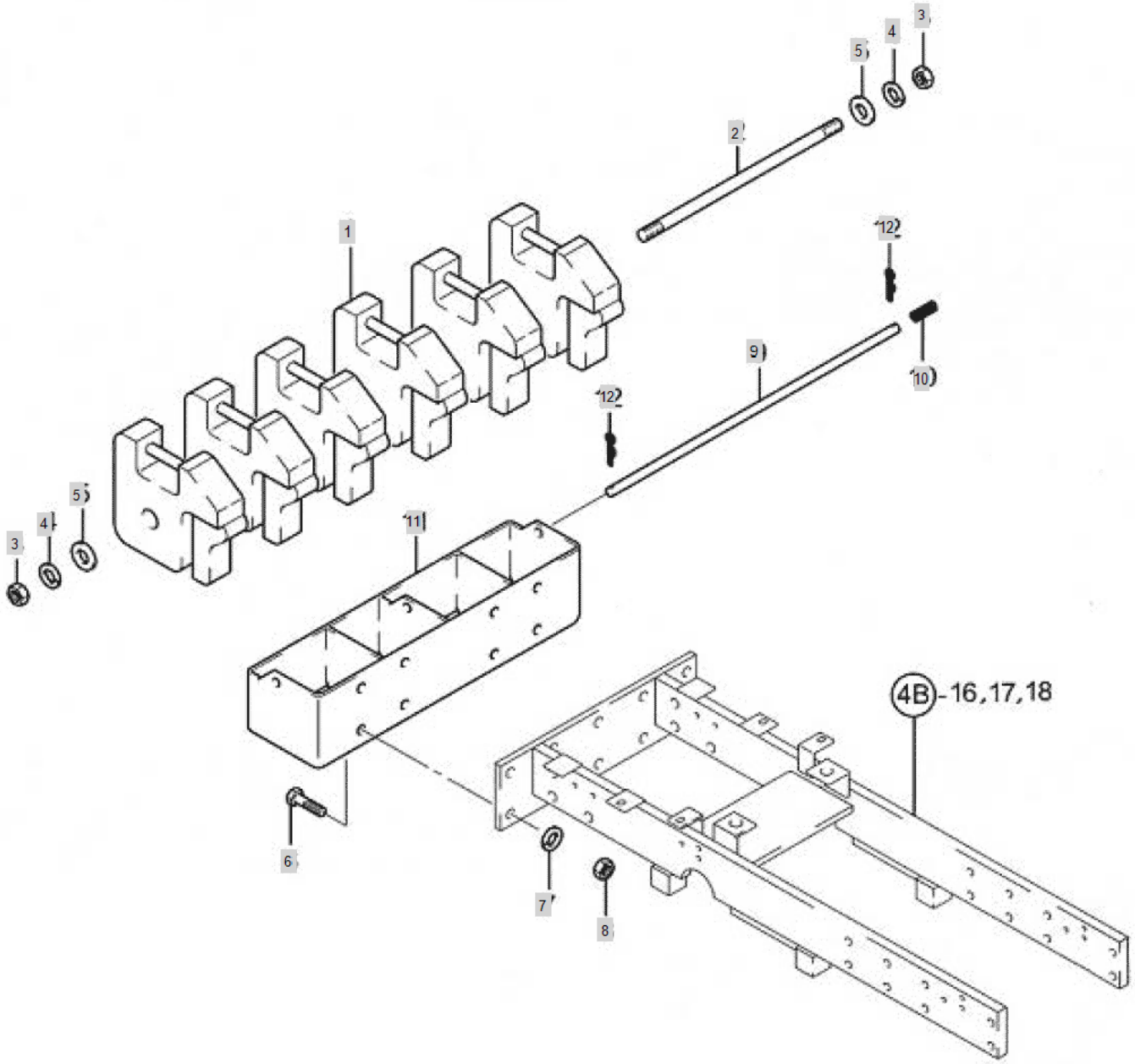

FIG 160 3520	FRONT WEIGHT	Year/Month 2020/02

KeyNo.	Part Number	Part Name	Quantity	Other
1	TTG0010000B2	WEIGHT,FRONT[20KG]	6	
2	TTG0020000B4	LOCKBAR	1	
3	26716-160002	NUT	2	
4	22217-160000	WASHER, SPRING (Φ 16)	2	
5	22137-160000	WASHER, PLAIN (Φ 16)	2	
6	26116-160402	BOLT	8	
7	22217-160000	WASHER, SPRING (Φ 16)	8	
8	26716-160002	NUT	8	
9	TNF1030000A4	LOCKPIN	1	
10	TTF1040000A4	SPRING	1	
11	TZG0110000B2		1	
12	22360-160000	PIN , SNAP (6Φ)	1	

FIG 191 3520	RMK1 (SINGLE SCV), RMK2 (DOUBLE SCV) - CURRENT VERSION	Year/Month 2020/02

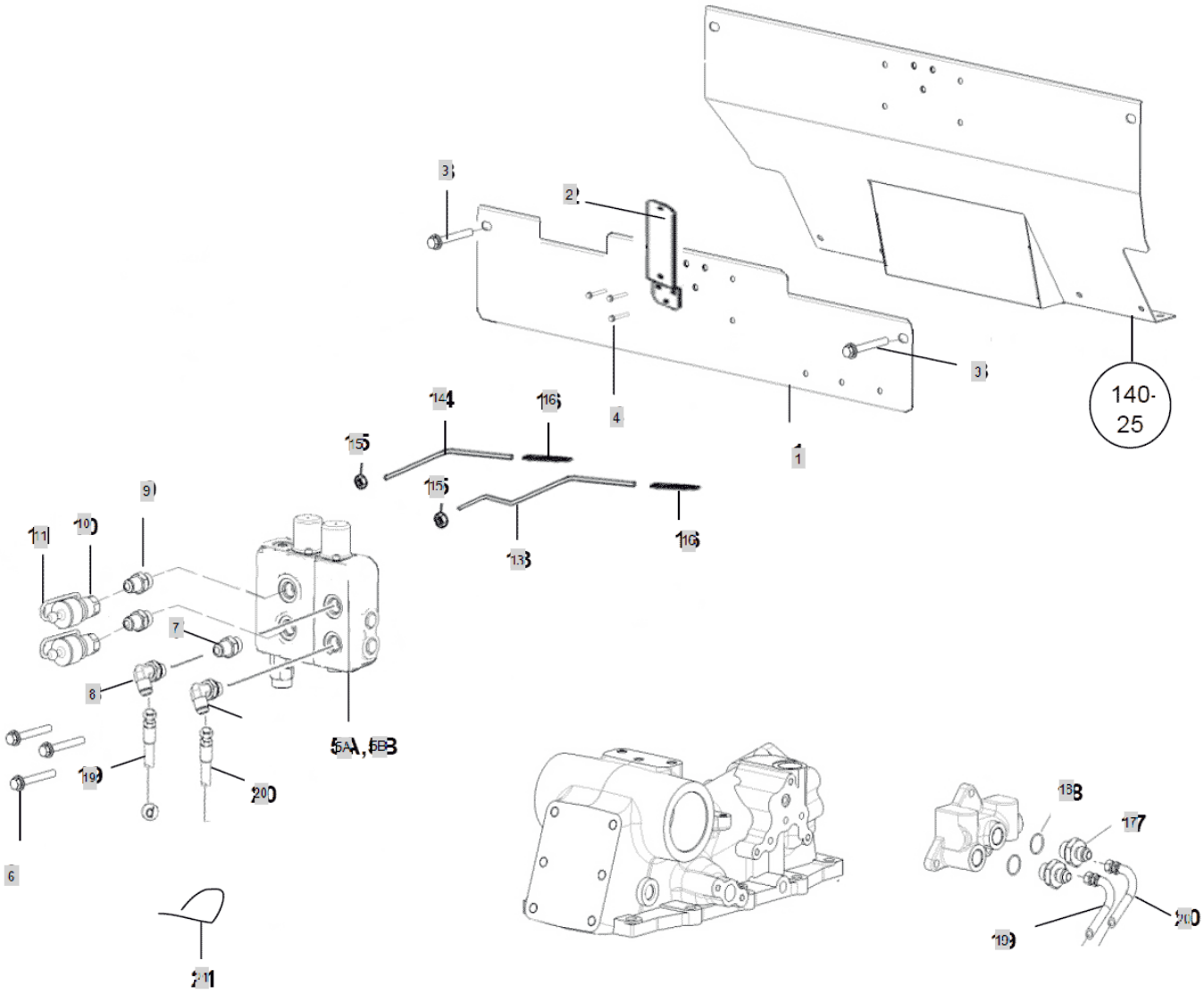

FIG 191 3520	RMK1 (SINGLE SCV), RMK2 (DOUBLE SCV) - CURRENT VERSION	Year/Month 2020/02

KeyNo.	Part Number	Part Name	Quantity	Other
1	HYD-MNT-PL	VALVE MOUNTING PLATE 10/20 SERS REMOTES	1	
2	HYD-MNT-BRKT	NEW EXTENDED SMV BRACKET FOR REMOTE VALVE	1	
3	26106-080252	SCREW,HEXFLANGEHEADCAP	2	
4	26106-06252	SMV BRACKET MTG BOLT	3	
5A	RM1	NEW STYLE SINGLE REMOTE VALVE ASSY	2	
5B	RM2	NEW STYLE DOUBLE REMOTE VALVE ASS'Y	1	
6	8MB-8MJ90	SUB TO-> OR8C50X-S	1	
7	OR8F50X-5	STRAIGHT ADAPTER	1	
8	24012	FITTING	1	
9	OR8-1/2F50F-S	STRAIGHT ADAPTER/O RING BOSS	4	
10	FBA3150000A3	QUICK COUPLER (1/2")	4	
11	TZA3250000A9	PLUG,JOINT	4	
12	26106-080302	HEX BOLT, FLANGE	3	
13	YD-BENT-HANDLE	DOUBLE BENT HANDLE	1	
14	YD-BENT-HANDLE	DOUBLE BENT HANDLE	1	
15	PA6201	NUT M8, 1.0	2	
16	HYD-HANDLE-GRIP	GRIP KNOB FOR HANDLES	2	
17	OR7005-08-20	SUB TO-> HF9606S-08-S12-20	2	
18	23414-200026	WASHER, PLAIN (Φ 20)	2	
19	HYD-HOSE-1	Return Hose Assy RMK (989401707)	1	
20	HYD-HOSE-2	Pressure Hose Assy RMK (989401708)	1	
21	PA16000	NYLON TIE STRAP	2	

FIG 200 3520	FILTERS	Year/Month 2020/02

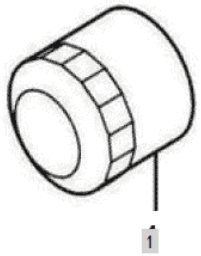

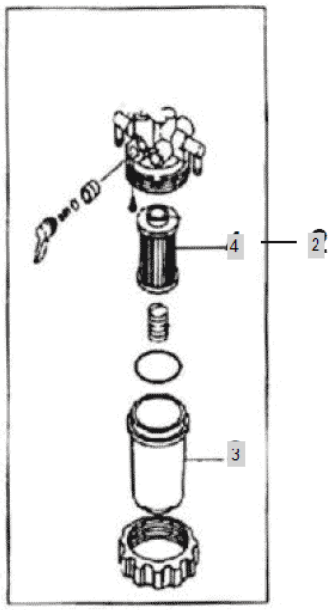

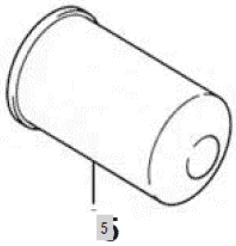

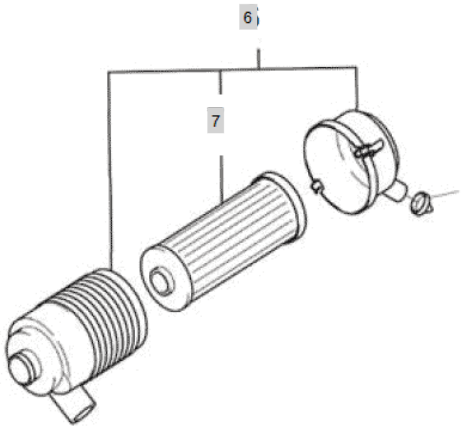

FIG 200 3520	FILTERS	Year/Month 2020/02

KeyNo.	Part Number	Part Name	Quantity	Other
1	HRA1102000A3	FILTER, ENGINE OIL	1	
2	HA13010000A3	STRAINERASS'Y,FUEL	1	
3	HA13050000A4	CUP(FILLTER)	1	
4	HA13040000A4	ELEMENT, FUEL FILTER	1	
5	NTB8030000B3	FILTER, HYDRAULIC OIL (10/20 SERIES)	1	
6	HRA0500700A1	AIRCLEANERASS`Y	1	
7	HRA0500702A9	ELEMENT	1	

FIG E001 3520	CYLINDER BLOCK	Year/Month 2020/02

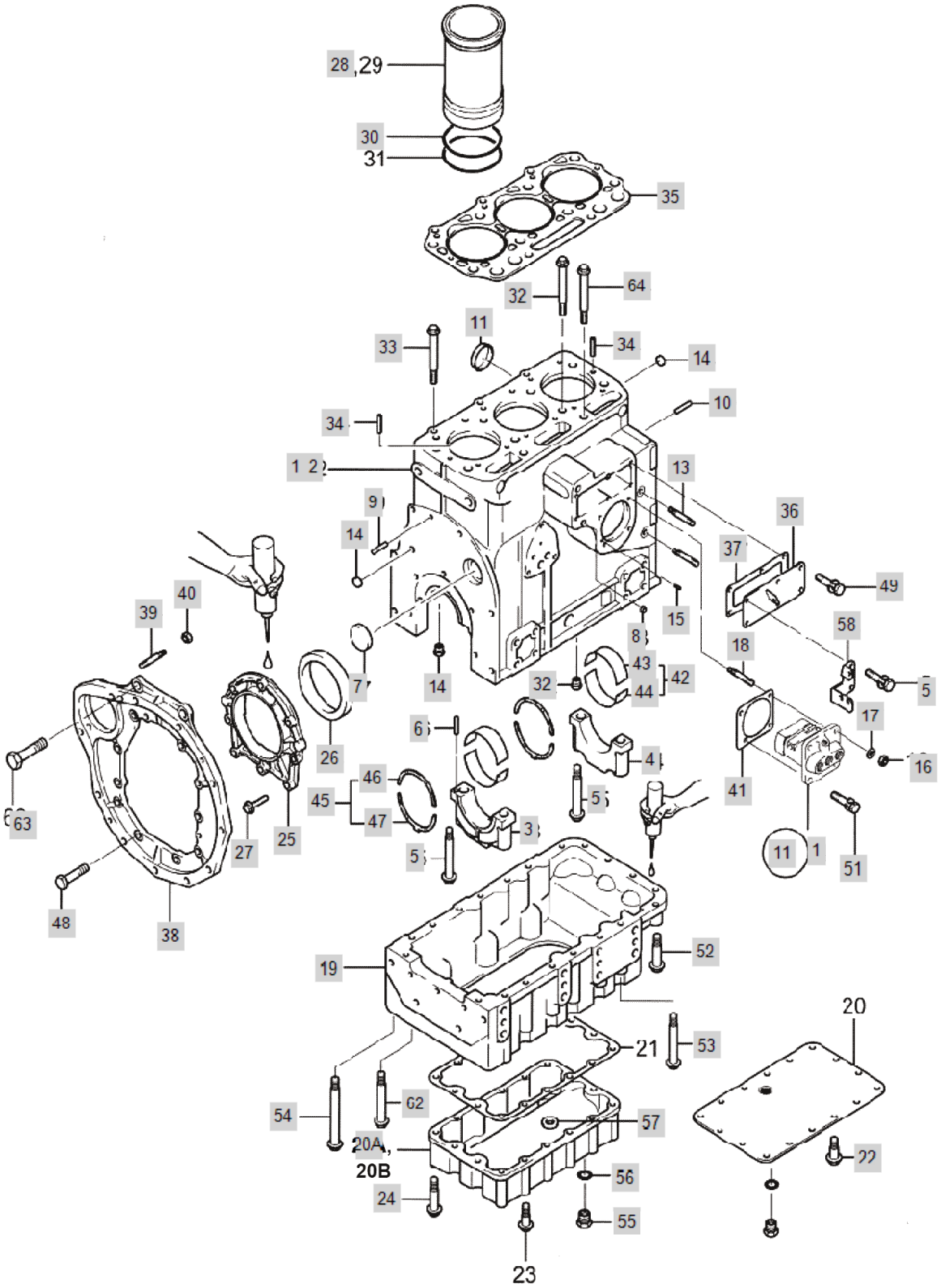

FIG E001 3520	CYLINDER BLOCK	Year/Month 2020/02

KeyNo.	Part Number	Part Name	Quantity	Other
1	HK01010000A9	CYLINDERBLOCKASS`Y	1	
2	HK01010100S0	CYLINDER BLOCK	1	
3	HK01010200B3		1	
4	HK01010300A3	BEARINGCAP(2)	3	
5	HK01010400B4		8	
6	22312-040100	PIN, DOWEL (4-10)	1	
7	27231-400000	PLUG-DISH TYPE	1	
8	HA01070000B4	BUSH	1	
9	22312-100200	PIN, DOWEL (10-20)	2	
10	22312-080222	PIN, DOWEL (8-22)	2	
11	27241-300000	PLUG (D30)	2	
13	26216-080142	STUDBOLTM8X14	3	
14	HH01080000A4	PLUG14(AL)	3	
15	22312-040100	PIN, DOWEL (4-10)	1	
16	26716-080002	NUT,HEX (D8)	2	
17	22217-080000	WASHER, SPRING (Φ 08)	2	
18	26216-080222	Bolt, Stud (8-22)	2	
19	HM0120000F0	OIL PAN	1	
20A	HH03100000A2	COVER(LOWER),OILFAN	1	
22	26106-080162	SCREW,HEXFLANGEHEADCAP	16	
24	26106-080202	SQR FLANGE BOLT	4	
25	HH03160000D2	HOUSING,OILSEAL	1	
26	HA07230000A4	OILSEAL,CRANKSHAFT	1	
27	26106-080252	SCREW,HEXFLANGEHEADCAP	8	
28	HK01240000D3	LINER,CYLINDER	3	
30	HP01550000A4	PACKING	6	
32	HK01270000C4	BOLT (A), CYLINDER HEAD	8	
33	HK01280000A4	BOLT,CYLINDER HEAD(B)	3	
34	22351-080016	PIN, SPRING (8-16)	2	
35	HK01310000B2	HEAD GASKET	1	
36	HK01650000A3	COVER,FUELPUMP	1	
37	HA01330000B3	PACKING,COVER	1	
38	HM50010000B0		1	
39	HA01350000A4	STUDBOLT	2	
40	26716-120002	BOLT,CYLINDER HEAD(B)	2	
41	HA01370000B4	SHIMSET	1	
42	HK01380000A9	MAINBEARINGASS`Y	4	
43	HK01380100A3	MAINBEARING(UP)	4	
44	HK01380200A3	MAINBEARING(DOWN)	4	
45	HH01240000A9	THRUSTBEARINGASS'Y	2	
46	HH01240100A4	THRUSTBEARING(UP)	2	
47	HH01240200A4	THRUSTBEARING(DOWN)	2	
48	26116-100282	BOLT	6	
49	26011-060142	BOLT	4	
51	26013-080222	BOLT,W/SW	2	

FIG E001 3520	CYLINDER BLOCK	Year/Month 2020/02

KeyNo.	Part Number	Part Name	Quantity	Other
52	26106-080452	HEX FLANGE BOLT 8X45	6	
53	26106-0801002	HEX FLANGE BOLT 8 x 100	8	
54	26106-081352	FLANGBOLT	4	
55	HH03080000A4	DRAINFLUG	1	
56	24311-000180	O-RING, DYNAMIC (Φ18)	1	
57	HF01470000A4	MAGNET	2	
58	HM01580000B4		1	
59	26011-060182	BOLT	2	
62	26106-081052	SCREW,HEXFLANGEHEADCAP	2	
63	26116-140302	HEXBOLT	2	
64	HK01290000A4	BOLT	2	

FIG E002 3520	GEAR CASE	Year/Month 2020/02

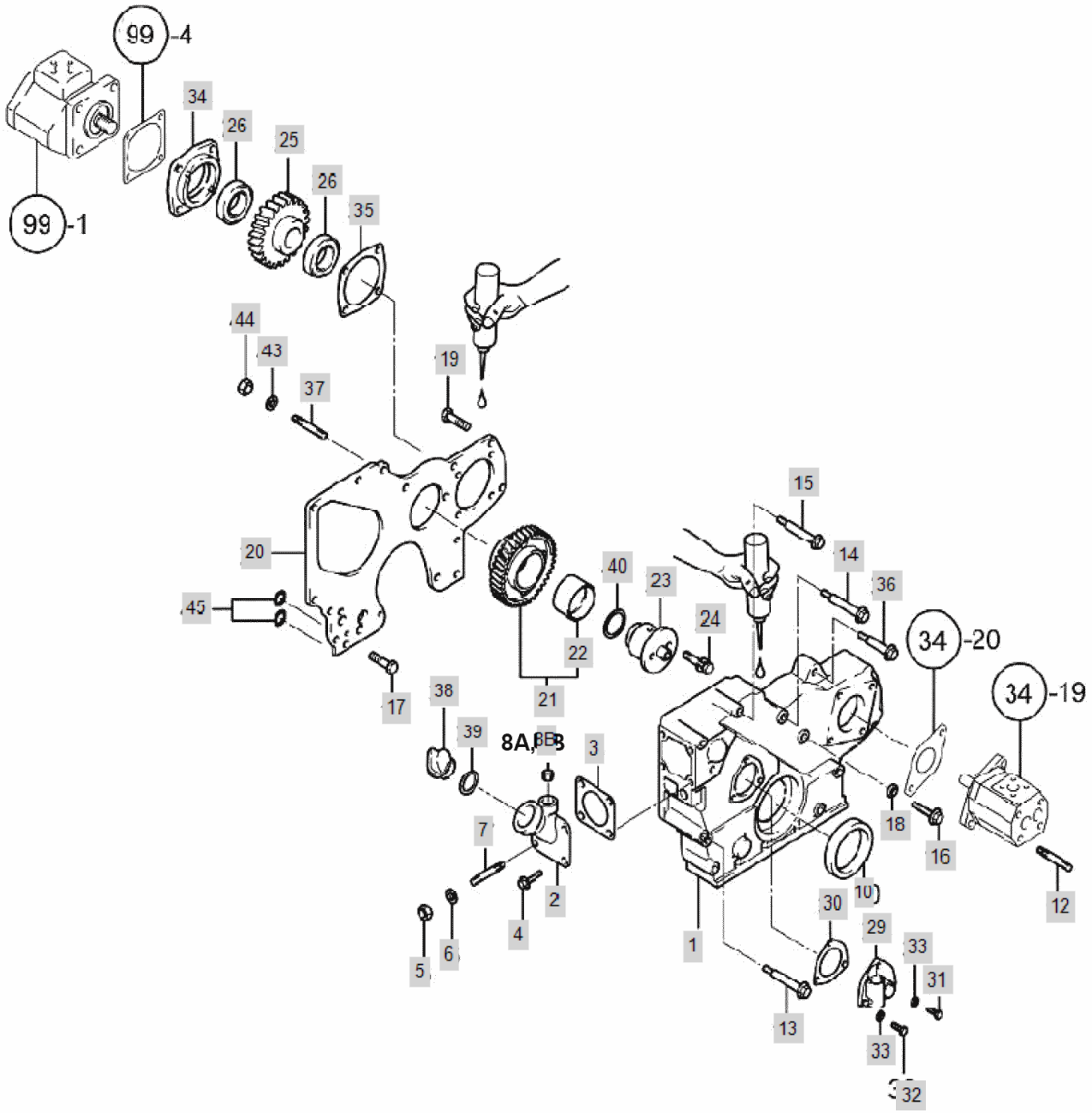

FIG E002 3520	GEAR CASE	Year/Month 2020/02

KeyNo.	Part Number	Part Name	Quantity	Other
1	HK02010000D0	GEARCASE	1	
2	HP02020000A3	SIDECOVER	1	
3	HK02030000A4	PACKING,COVER	1	
4	26106-080142	SCREW,HEXFLANGEHEADCAP	2	
5	26716-080002	NUT,HEX (D8)	2	
6	22137-080000	WASHER, PLAIN (Φ 08)	2	
7	26216-080162	STUD	2	
8B	HL02420000A4	CONNECTINGPIPE	1	
10	HA02100000A4	SEALCRANKSHAFTOIL	1	
12	26216-080222	Bolt, Stud (8-22)	2	
13	26106-080902	SCREW,HEXFLANGEHEADCAP	3	
14	26106-080802	SCREW,HEXFLANGEHEADCAP	3	
15	26106-080702	SCREW,HEXFLANGEHEADCAP	2	
16	26106-080202	SQR FLANGE BOLT	1	
17	26116-080162	SCREW,HEXAGONHEADCAP	2	
18	23414-080000	WASHER, PLAIN (Φ8)	1	
19	26116-080162	SCREW,HEXAGONHEADCAP	3	
20	HK0220000B1	FLANGE, GEAR CASE	1	
21	HK02210000C9	IDLEGEARASS`Y	1	
22	HH08120000A4	BUSH	1	
23	HK02230000B3	SHAFT,IDLEGEAR	1	
24	26013-080502	Bolt, Hexa (8-50)	2	
25	HM02250000C3	DRIVINGGEAR,HYDPUMP	1	
26	24105-060064	BALLBEARING	2	
29	HA02290000B3	GEARUNIT,TACOMETER	1	
30	HA0230000A4	PACKING	1	
31	26116-060162	BOLT	2	
32	26116-060326	BOLT	1	
33	23414-060000	WASHER,SEALING	3	
34	HK02340000B3	HOUSING, POWER TAKEOFF	1	
35	HK02350000A4	GASKET,ACCDRIVECOVER	1	
36	26106-080752	SCREW,HEXFLANGEHEADCAP	1	
37	HM02380000A4	STUD	4	
38	HC03470000B4	CAP,FILTER	1	
39	HA01410000A4	SEAL,RECTANGULARRING	1	
40	24311-000160	O-RING, DYNAMIC (Φ16)	1	
43	22217-080000	WASHER, SPRING (Φ 08)	4	
44	26716-080002	NUT,HEX (D8)	4	
45	24311-000140	O-RING, DYNAMIC (Φ14)	2	

FIG E003 3520	CYLINDER HEAD	Year/Month 2020/02

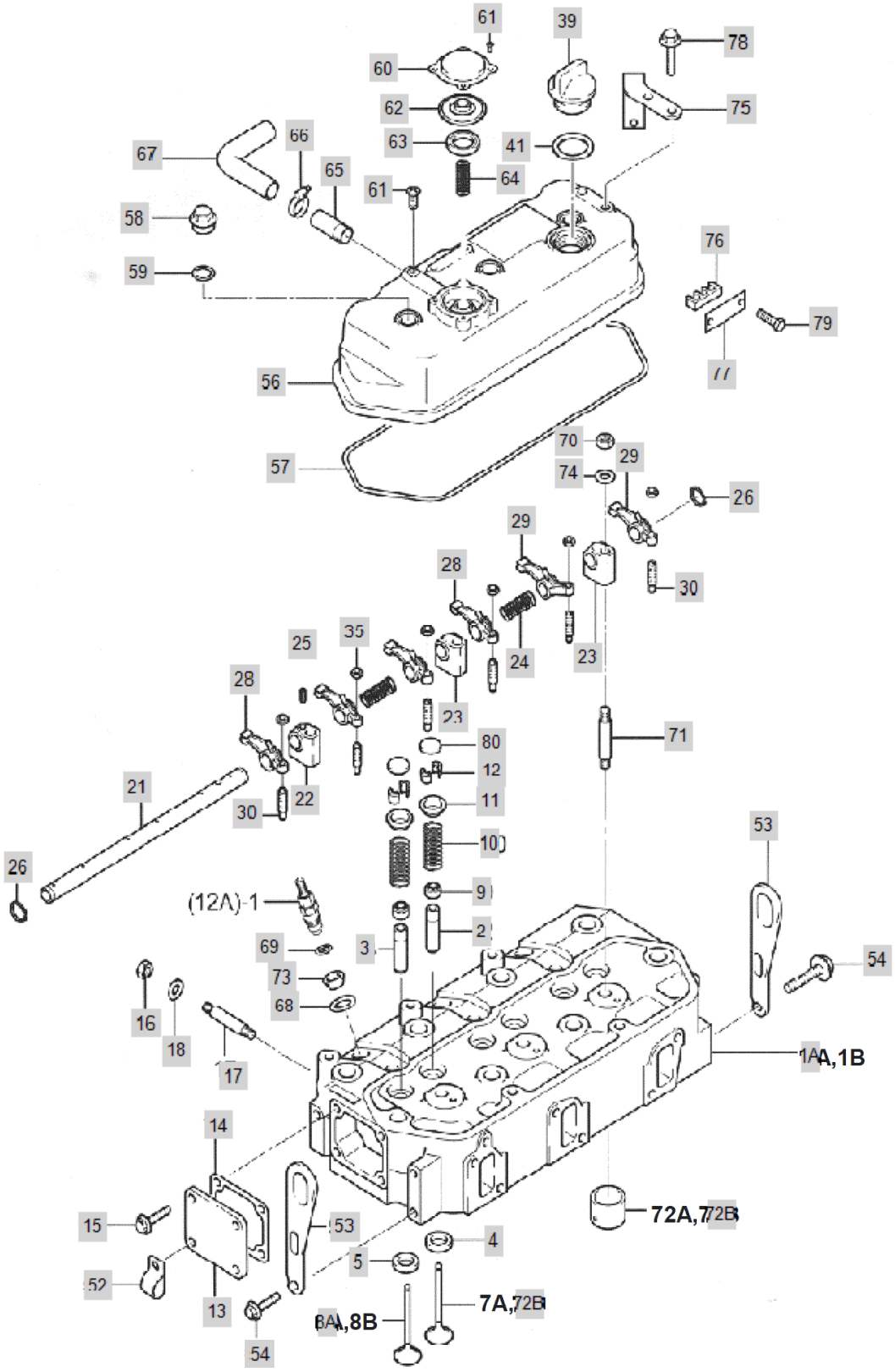

FIG E003 3520	CYLINDER HEAD	Year/Month 2020/02

KeyNo.	Part Number	Part Name	Quantity	Other
1A	HK03010000J0	CYLINDER HEAD ASSY (3T ENGINE)	1	
2	HP03050000C4	GUIDE,VALVE(IN)	3	
3	HP03060000C4	GUIDE,VALVE(OUT)	3	
4	HP03550000A4	SUC.VALVESEAT	3	
5	HP03560000A4	EXH.VALVESEAT	3	
7A	AB02020000B4	VALVE, INTAKE	3	
8A	AB02030000B4	EXHAUSTVALVE	3	
9	HA03070000A4	SEAL,VALVESTEM	6	
10	HA03080000A4	VALVESPRING	6	
11	AB02060000A4	RETAINER,VALVESPRING	6	
12	AB02070000A4	COTTER SPRING	6	
13	HA02030000A4	SIDECOVER	1	
14	HA03240000A4	COVERPACKING	1	
15	26106-080122	Bolt, Hexa (8-12)	4	
16	26716-080002	NUT,HEX (D8)	2	
17	HA03150000A4	STUDBOLT	2	
18	22137-080000	WASHER, PLAIN (Φ 08)	2	
21	HK03190000A3	ROCKERARMSHAFTASS`Y	1	
22	HK03200000B4	SUPPORT(A)	1	
23	HK03210000B4	SUPPORT(B)	2	
24	HK03220000A4	SPRING	2	
25	26921-080102	SCREW,SLOTTEDSET	1	
26	22242-000170	SNAP RING, SHAFT (Φ 17)	2	
28	HK03260000H4	ROCKERARMA	4	
29	HK03270000H4	ROCKER ARM	2	
30	AF02110000E4	SCREW,RKRLEVERADJUSTING	6	
35	HH05280000A4	NUT,VALVEADJUSTING	6	
39	HC03470000B4	CAP,FILTER	1	
41	HA01410000A4	SEAL,RECTANGULARRING	1	
52	HA01430000A4	PIPECLAMP	1	
53	HK03530000A4	BRACKET,LIFTING	2	
54	26106-080142	SCREW,HEXFLANGEHEADCAP	4	
56	HM03350000B0	HEADCOVER	1	
57	HK03650000A3	PACKING,HEADCOVER	1	
58	HK03520000B4	UPPERCOVERCAP	3	
59	24311-000140	O-RING, DYNAMIC (Φ14)	3	
60	HL05430000A4	COVER,BREATHER	1	
61	26587-040102	SCREW,FILLISTERHEADCAP	5	
62	HL05440000A4	VALVE,PRESSURERELIEF	1	
63	HL05450000A4	RETAINER,PRSLMGVALVE	1	
64	HL05460000A4	SPRING,PRESSURELIMITER	1	
65	HL05470000A4	TUBE,BREATHER	1	
66	23080-021000	CLAMP,VBAND	1	
67	23065-160500	HOSE	1	
68	HK03880000A4	SEAL,INJECTOR	3	

FIG E003 3520	CYLINDER HEAD	Year/Month 2020/02

KeyNo.	Part Number	Part Name	Quantity	Other
69	HK03670000A4	INSULATOR	3	
70	HA03180000B3	NUT	3	
71	HK03220000A4	SPRING	3	
72B	HK36300000B4	PRE-COMBUSTION CHAMBER	3	
73	HK03640000B4	SPACER	3	
74	22117-120000	WASHER, PLAIN (Φ 12)	3	
75	HK13220000B4		1	
76	HA13230000A4	BRACKET,FUELPLUMBING	1	
77	HA13240000A4	CLAMP,TUBE	1	
78	26106-080142	SCREW,HEXFLANGEHEADCAP	2	
79	26116-060169	SCREW,HEXAGONHEADCAP	2	
80	HK03680000B4	CAP,VALVE	6	

FIG E004 3520	INTAKE MANIFOLD & AIR CLEANER	Year/Month 2020/02

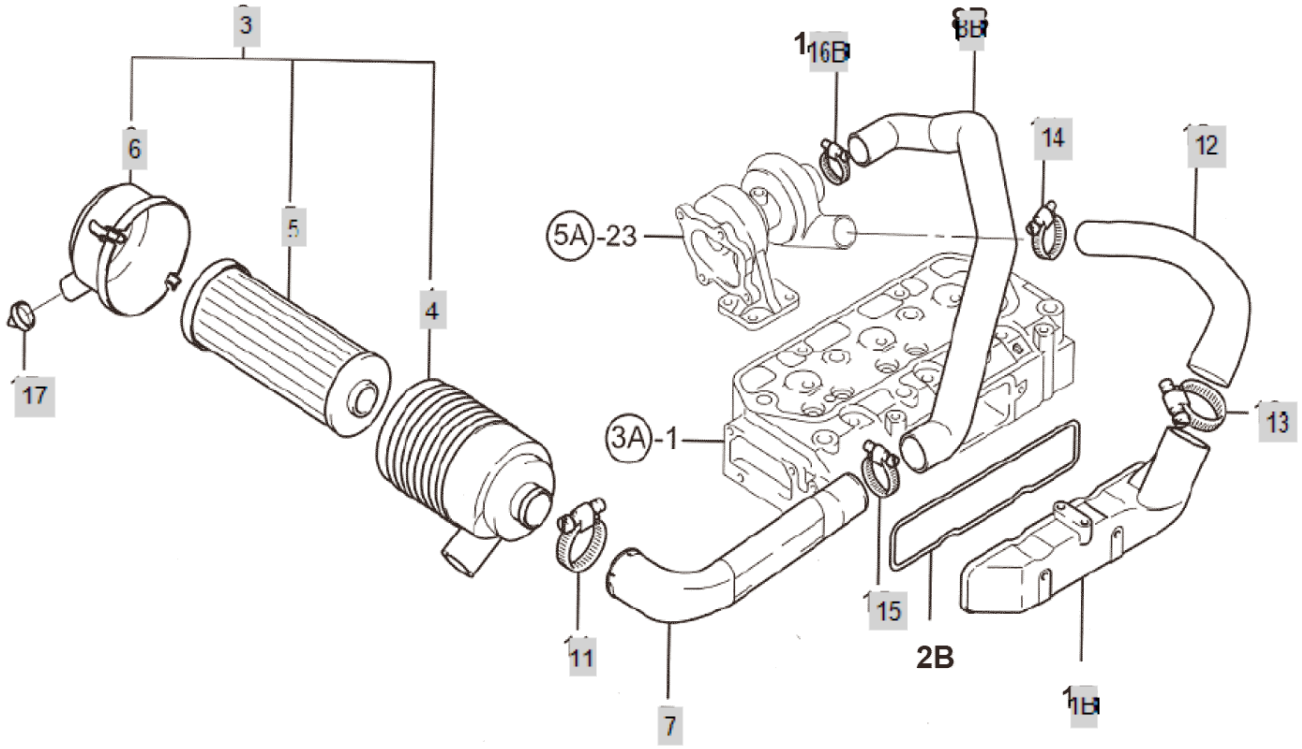

FIG E004 3520	INTAKE MANIFOLD & AIR CLEANER	Year/Month 2020/02

KeyNo.	Part Number	Part Name	Quantity	Other
1B	HM04010000A1	MANIFOLD,INTAKE	1	
2A	HA0421000EA3	GASKET, INTAKE MANIFOLD	1	
3	HRA0500700A1	AIRCLEANERASS`Y	1	
4	HRA0500701A9		1	
5	HRA0500702A9	ELEMENT	1	
6	HRA0800703A9	COVER ASS'Y	1	
7	HM50150000A2	PIPEASS`Y,SUCTION	1	
8B	HP50160000A2	JOINTHOSE,SUCTIONPIPE	1	
11	23000-070000	CLAMP,HOSE	1	
12	HP04160000B2	HOSE(A),INTAKE	1	
13	23000-070000	CLAMP,HOSE	1	
14	23000-048000	CLAMP,HOSE	1	
15	23000-070000	CLAMP,HOSE	1	
16B	23000-060000	HOSECLAMP60	1	
17	HRA0500704A9	VACUATORVALVE	1	

FIG E005 3520	EXHAUST MANIFOLD	Year/Month 2020/02

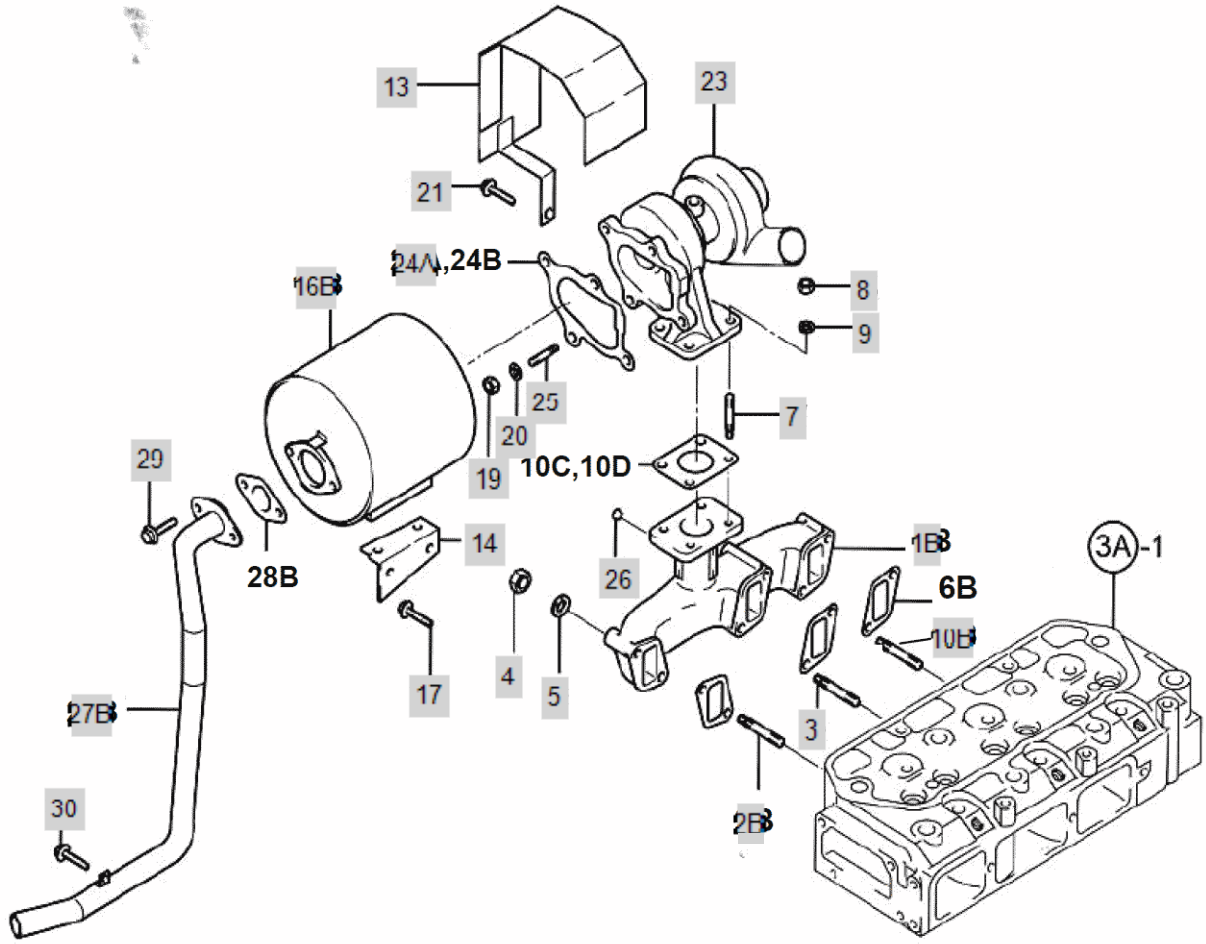

FIG E005 3520	EXHAUST MANIFOLD	Year/Month 2020/02

KeyNo.	Part Number	Part Name	Quantity	Other
1B	HP05010000E1	EXHAUSTMANIFORD	1	
2B	26216-080802	STUD	2	
3	26216-080702	STUDBOLT	2	
4	26716-080002	NUT,HEX (D8)	6	
5	22217-080000	WASHER, SPRING (Φ 08)	6	
6A	HA05160000A4	GASKET,EXHAUST MANIFOLD	3	
7	26216-080222	Bolt, Stud (8-22)	4	
8	26716-080002	NUT,HEX (D8)	4	
9	22217-080000	WASHER, SPRING (Φ 08)	4	
10B	26216-080552	STUD	2	
11C	HL07060000A4	GASKET(T/CIN)	1	
13	HP05130000B2	COVER,TURBO	1	
14	HP05290000A4	BRACKET(MUFFLER)	1	
16B	HP05120000D0	MUFFLER	1	
17	26106-080142	SCREW,HEXFLANGEHEADCAP	4	
19	26716-080002	NUT,HEX (D8)	4	
20	22217-080000	WASHER, SPRING (Φ 08)	4	
21	26106-080122	Bolt, Hexa (8-12)	1	
23	HP0523000SA9	TURBOASS`Y	1	
24A	HP05240000A4	GASKET,EXHOUTCONNECTION	1	
25	26216-080252	STUDBOLT	4	
26	23871-020000	Plug, Pipe	1	
27B	HP50080000A2	EXHAUSTPIPE3T90LT	1	
28A	HK0514000EA4	GASKET	1	
29	26106-080162	SCREW,HEXFLANGEHEADCAP	2	
30	26106-080122	Bolt, Hexa (8-12)	1	

FIG E006 3520	CAM SHAFT	Year/Month 2020/02

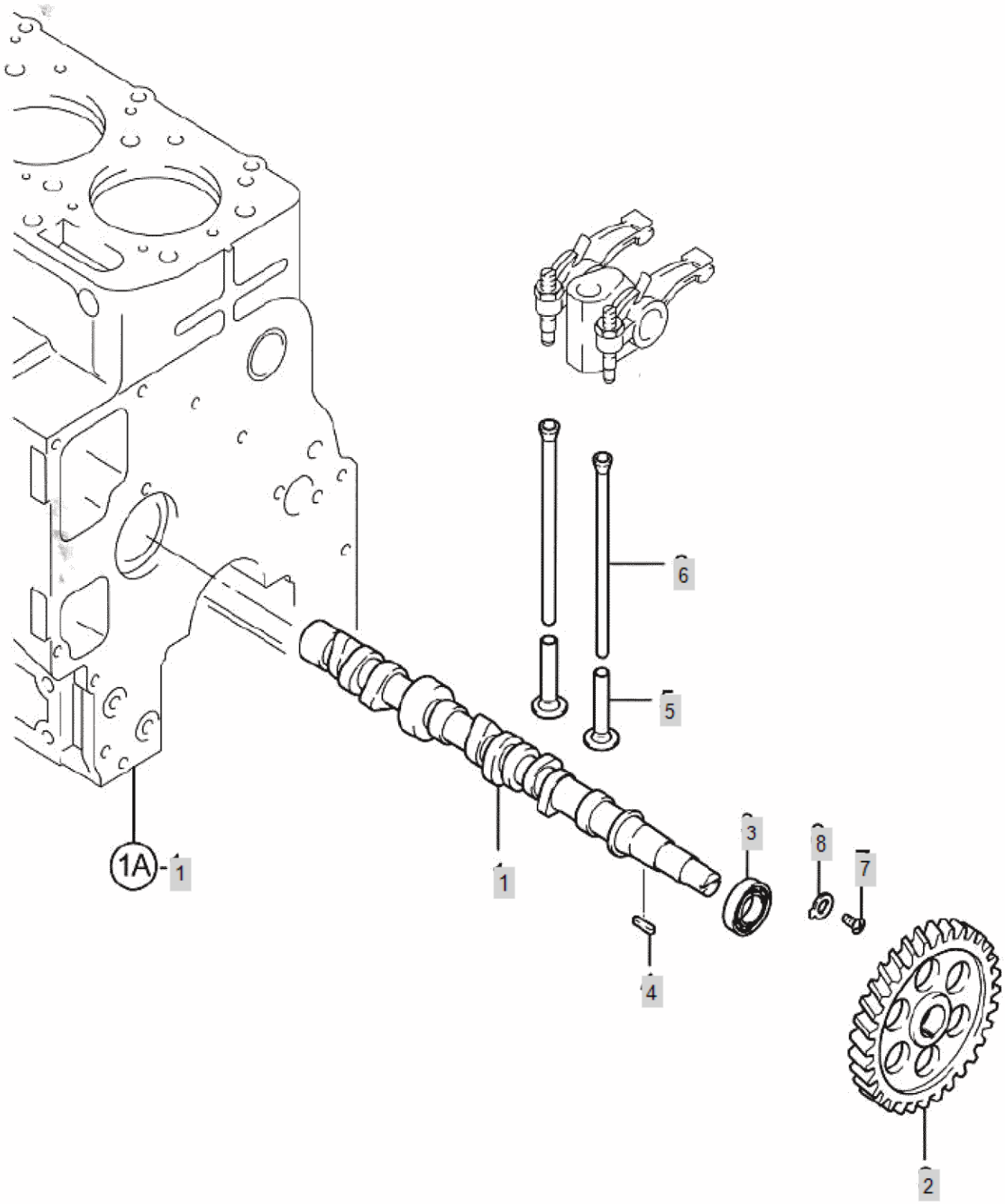

FIG E006 3520	CAM SHAFT	Year/Month 2020/02

KeyNo.	Part Number	Part Name	Quantity	Other
1	HK06010000D1	CAMSHAFT	1	
2	HK06020000A3	GEAR,CAMSHAFT	1	
3	24101-062064	BALL BEARING (#6206)	1	
4	HA06040000A4	KEY,CAMSHAFT	1	
5	AB04050000B4		6	
6	HK06060000B4	PUSHROD	6	
7	26587-080122	BINDINGSCREW	1	
8	HA06090000A4	RETAINER	1	

FIG E007 3520	CRANK SHAFT	Year/Month 2020/02

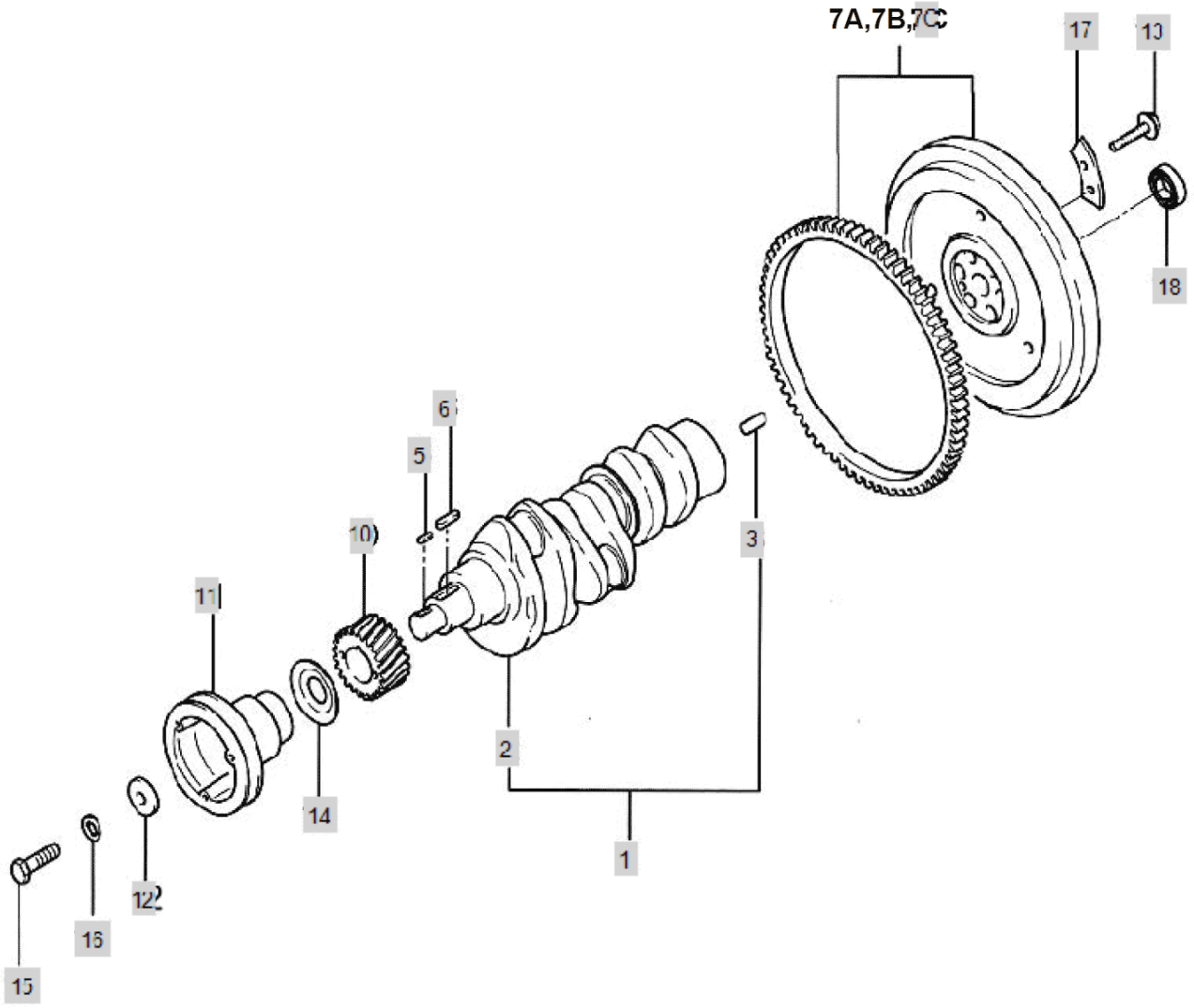

FIG E007 3520	CRANK SHAFT	Year/Month 2020/02

KeyNo.	Part Number	Part Name	Quantity	Other
1	HK27010000A9	CRANKSHAFTASSY	1	
2	HK27010000A1	CRANKSHAFT	1	
3	HK07150000A4	PIN	1	
5	HA07030000A4	CRANKSHAFTKEY(B)	1	
6	HA07040000A4	CRANKSHAFTKEY(A)	1	
7C	HM50020000E9	FLYWHEELASS'Y	1	
10	HA07080000A4	GEAR,CRANKSHAFT	1	
11	HM24150000C3		1	
12	HA07100000A4	WASHER,V-PULLEY	1	
13	HM50030000A4	BOLT,FLYWHEEL	6	
14	HA07130000A4	DISK	1	
15	26156-120302	BOLT	1	
16	22217-120000	WASHER, SPRING (Φ 12)	1	
17	HA07400000A4	CLAMP,FLYWHEELBOLT	3	
18	24104-063024	BALL BEARING (#6302UU)	1	

FIG E008 3520	PISTON	Year/Month 2020/02

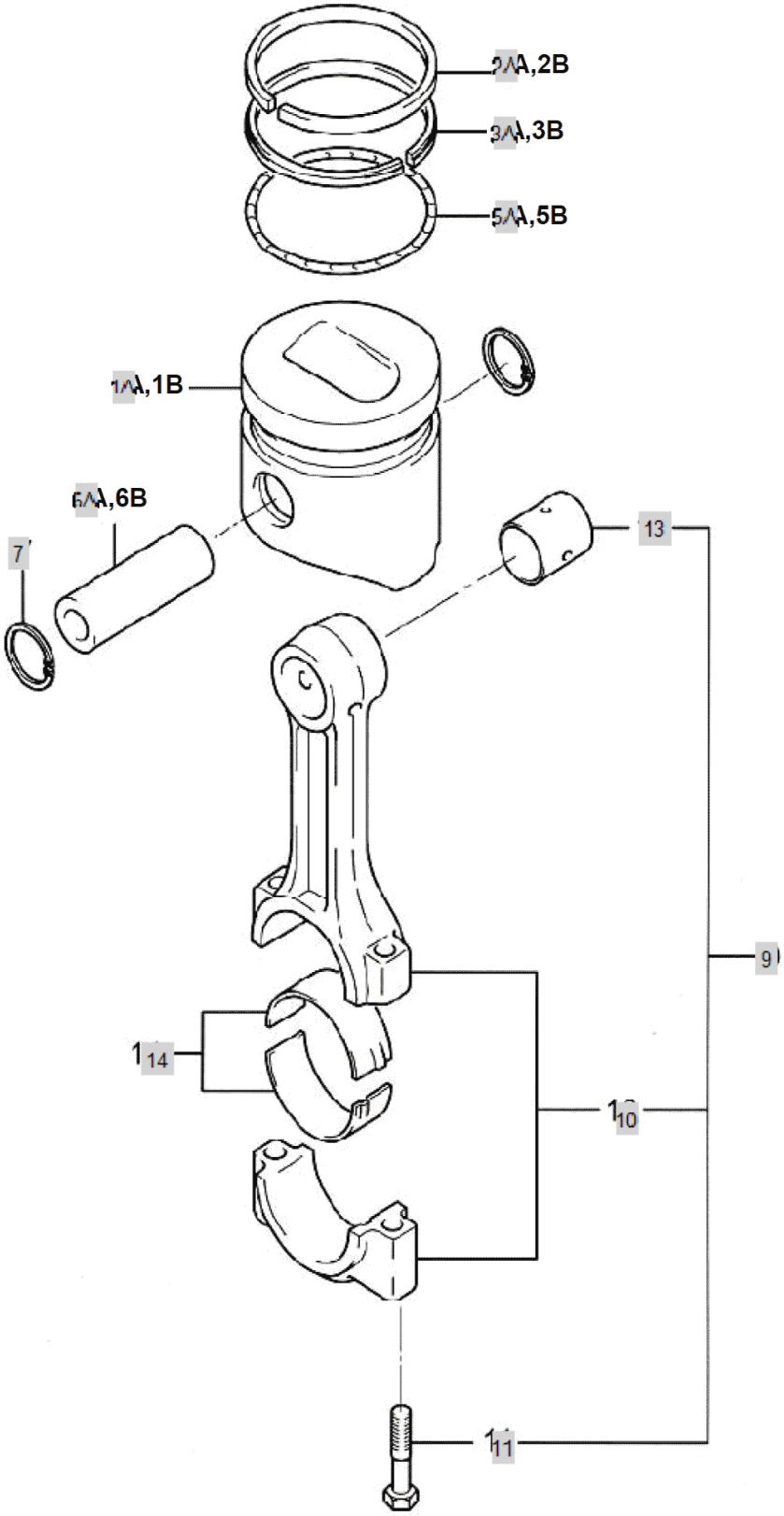

FIG E008 3520	PISTON	Year/Month 2020/02

KeyNo.	Part Number	Part Name	Quantity	Other
1A	HK08150000B1	PISTON	3	
2A	HK27200000A9	PISTONRINGASS`Y(98~)	3	
3A	HK27200000A9	PISTONRINGASS`Y(98~)	3	
5A	HK27200000A9	PISTONRINGASS`Y(98~)	3	
6A	HK27150000A4	PIN,PISTON	3	
7	HA08070000A4	RING,RETAINING	6	
9	HK27070000B9	CONNECTINGRODASSY	3	
10	HK27070100B2		3	
11	HK27080000A4	CONNECTINGRODBOLT	6	
13	AB06100000B4		3	
14	HB08120000A4	BEARING,CRANKPIN	6	

FIG E009 3520	LUB. OIL SYSTEM	Year/Month 2020/02

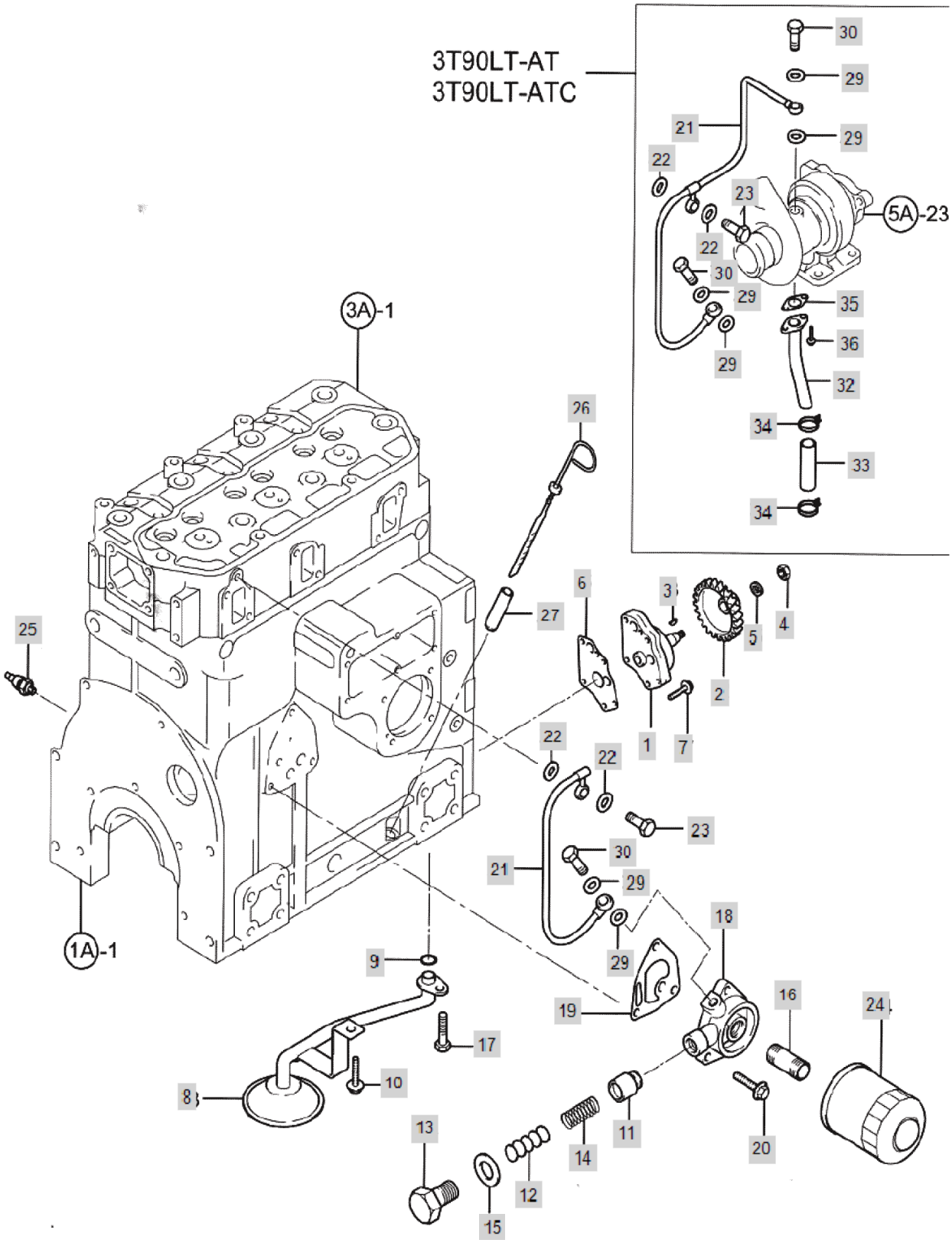

FIG E009 3520	LUB. OIL SYSTEM	Year/Month 2020/02

KeyNo.	Part Number	Part Name	Quantity	Other
1	HK09010000B3	OILPUMPASS'Y	1	
2	HK09020000A3	GEAR,OILPUMP	1	
3	22522-030100	KEY, WOODRUFF (03-10)	1	
4	26756-080002	NUT	1	
5	22217-080000	WASHER, SPRING (Φ 08)	1	
6	HK09060000A4	PACKING	1	
7	26106-060252	Screw, (6-25)	3	
8	HK09080000D2	PIPEASS`Y,OILINTAKE	1	
9	24311-000140	O-RING, DYNAMIC (Φ14)	1	
10	26106-080122	Bolt, Hexa (8-12)	1	
11	HH10080000B4	VALVE,PRESSUREREGULATOR	1	
12	HH10090000A4	SHIM	3	
13	HH10130000A4	RETAINER,SPRING	1	
14	HH11030000B4	RETAINER,PRXLMGVALVE	1	
15	23414-180000	WASHER,SEALING	1	
16	HH11030000B4	RETAINER,PRXLMGVALVE	1	
17	26116-080122	SCREW,HEXAGONHEADCAP	1	
18	HK09180000B3	OILFILLTERBRACKET	1	
19	HK09190000A4	PACKING	1	
20	26106-080222	SCREW, HEX FLANGE HEAD CAP	3	
21	HP09310000B3	PIPEA(TURBO)	1	
22	23414-080000	WASHER, PLAIN (Φ8)	2	
23	HA09230000A4	PIPECONNECTINGBOLT	1	
24	HRA1102000A3	FILTER, ENGINE OIL	1	
25	HA09250000A3	SWITCH,OILPRESSURE	1	
26	HM03200000A3	DEEPSTICKASS`Y	1	
27	HL03210000B4	TUBE,OILGAUGE	1	
29	23414-100000	PLAIN WASHER (D10)	2	
30	HA09220000A4	SCREW,BANJOCONNECTOR	2	
32	HP09320000A3		1	
33	HP09330000B4	DRAIN HOSE (T/C OUT)	1	
34	23000-028000	Clamp, Hose (Φ28)	2	
35	HP09350000A4	GASKET,OILDRAIN	1	
36	26106-060182	Bolt, Hexa (6-18)	1	

FIG E010 3520	COOLING SYSTEM	Year/Month 2020/02

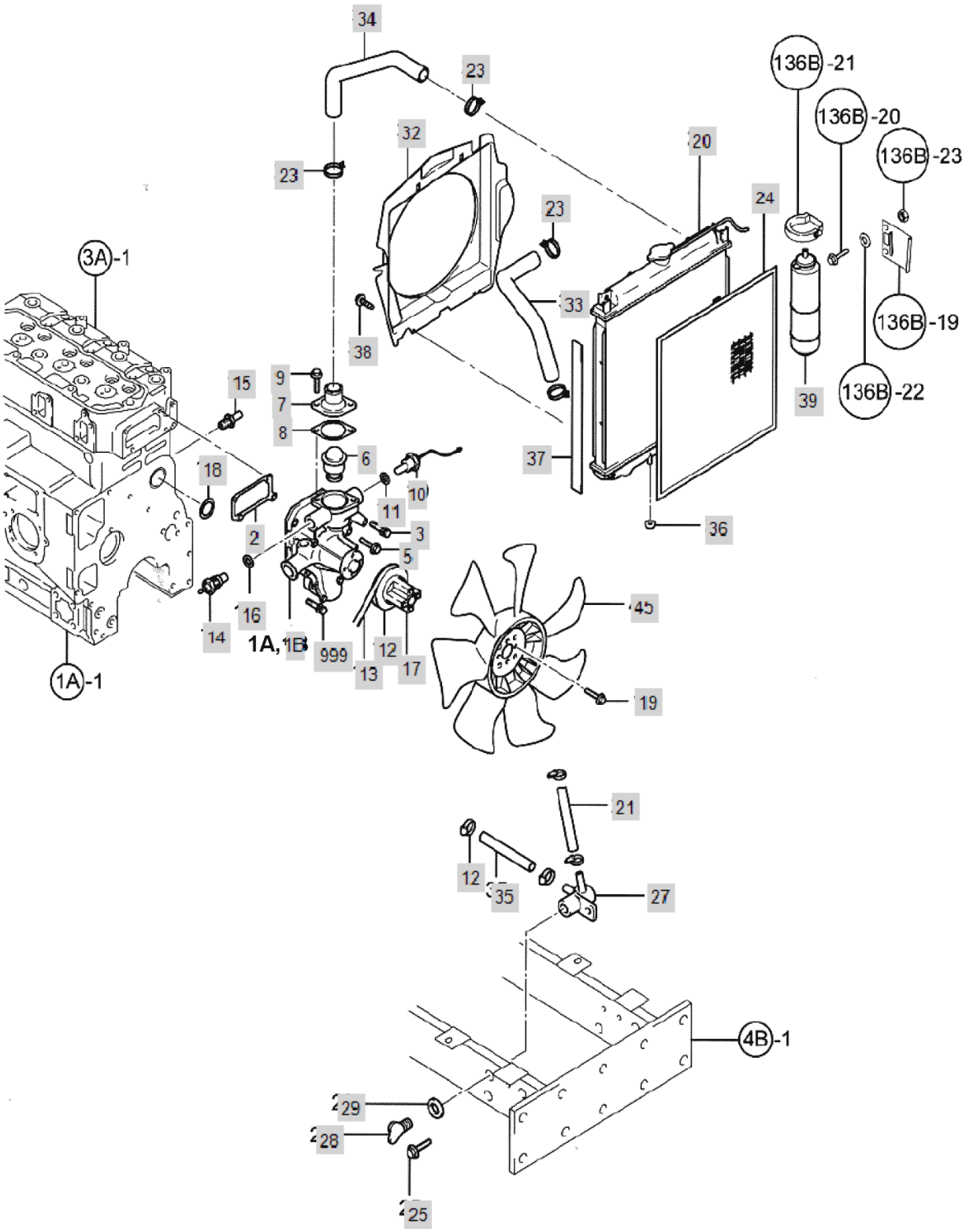

FIG E010 3520	COOLING SYSTEM	Year/Month 2020/02

KeyNo.	Part Number	Part Name	Quantity	Other
1B	HM10010000B1	COOLANT PUMP ASSY	1	
2	HK10020000A4	PACKING	1	
3	26011-080552	WASHER	2	
5	26011-080302	BOLT8X30	1	
6	HK10030000A3	THERMOSTAT	1	
7	HC09160000A4	CONNECTION,WATEROUTLET	1	
8	HA10670000B4	GASKET,THERMOSTAT	1	
9	26106-080182	SCREW,HEXFLANGEHEADCAP	2	
10	HH12210000A3	SENSOR,GLOWPLUG	1	
11	23414-160000	WASHER,SEALING	1	
12	HM24100000A4	V-PULLEY	1	
13	HM24130000A4	BELT,V(A35")HP	1	
14	HH12190000A3	WATER TEMP SENSOR	1	
15	CA09470000B4	CONNECT	1	
16	23414-100014	PACKING,COPPER	1	
17	HM10250000C3		1	
18	24341-000280	O-RING, FIX (Φ28)	1	
19	26106-060702	HEXFLANGEBOLT	4	
20	HRA1203000B1	RADIATOR ASSY	1	
21	HM50220000A4	DRAINHOSEB	1	
22	23080-012000	CLIP,VBAND	4	
23	23010-032000	HOSEBAND32	4	
24	HRA1204900A2	SCREEN,DUSTPROOF	1	
25	26106-080252	SCREW,HEXFLANGEHEADCAP	1	
27	CE08210101A9	BODY	1	
28	HH12310000A4	PLUG,DRAIN CORK	1	
29	HH12320000A4	PACKING	1	
32	NTG1120000A1	SHROUD	1	
33	HM50140000A2	HOSEB,COOLINGWATER	1	
34	HM50130000A3	HOSEA,COOLINGWATER	1	
35	HM50210000A4	DRAINHOSEA	1	
36	HRA1203300A4	RUBEER, VIBRATION PROOF	2	
37	HRA1205000A4	SEAL(RADIATOR)	4	
38	HRA1203200A4	TAPPINGSCREW	4	
39	CA09270000C2	COOLANT RESERVOIR	1	
45	HL12070000A1	COOLINGFAN	1	

FIG E011 3520	FUEL INJECTION PUMP	Year/Month 2020/02

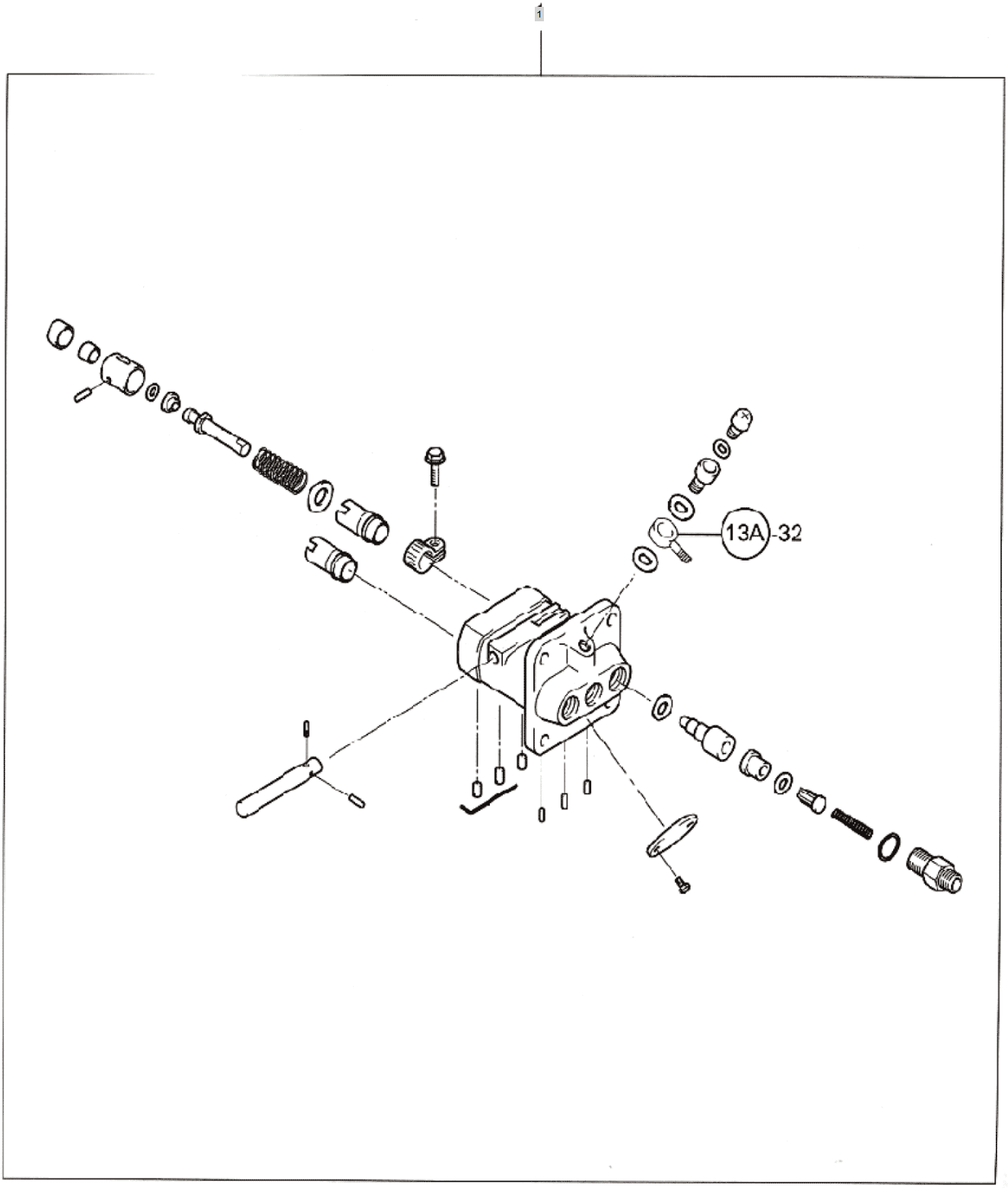

FIG E011 3520	FUEL INJECTION PUMP	Year/Month 2020/02

KeyNo.	Part Number	Part Name	Quantity	Other
1	HK11010000A2	FUEL INEJCTION PUMP ASSY	1	

FIG E012 3520	FUEL INJECTION VALVE	Year/Month 2020/02

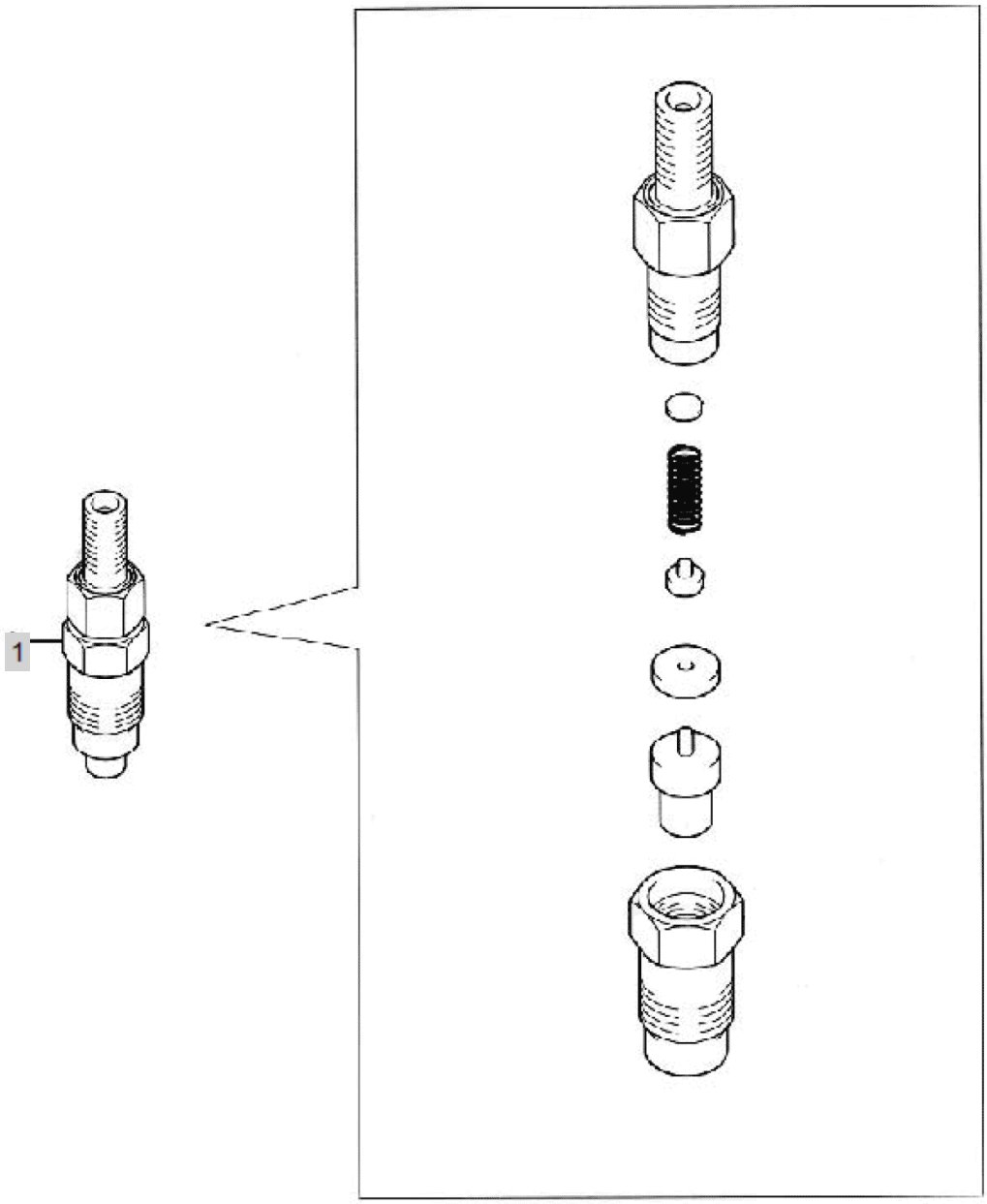

FIG E012 3520	FUEL INJECTION VALVE	Year/Month 2020/02

KeyNo.	Part Number	Part Name	Quantity	Other
1	HK12020000A3	INJECTOR, FUEL	1	

FIG E013 3520	FUEL INJECTION SYSTEM & VALVE	Year/Month 2020/02

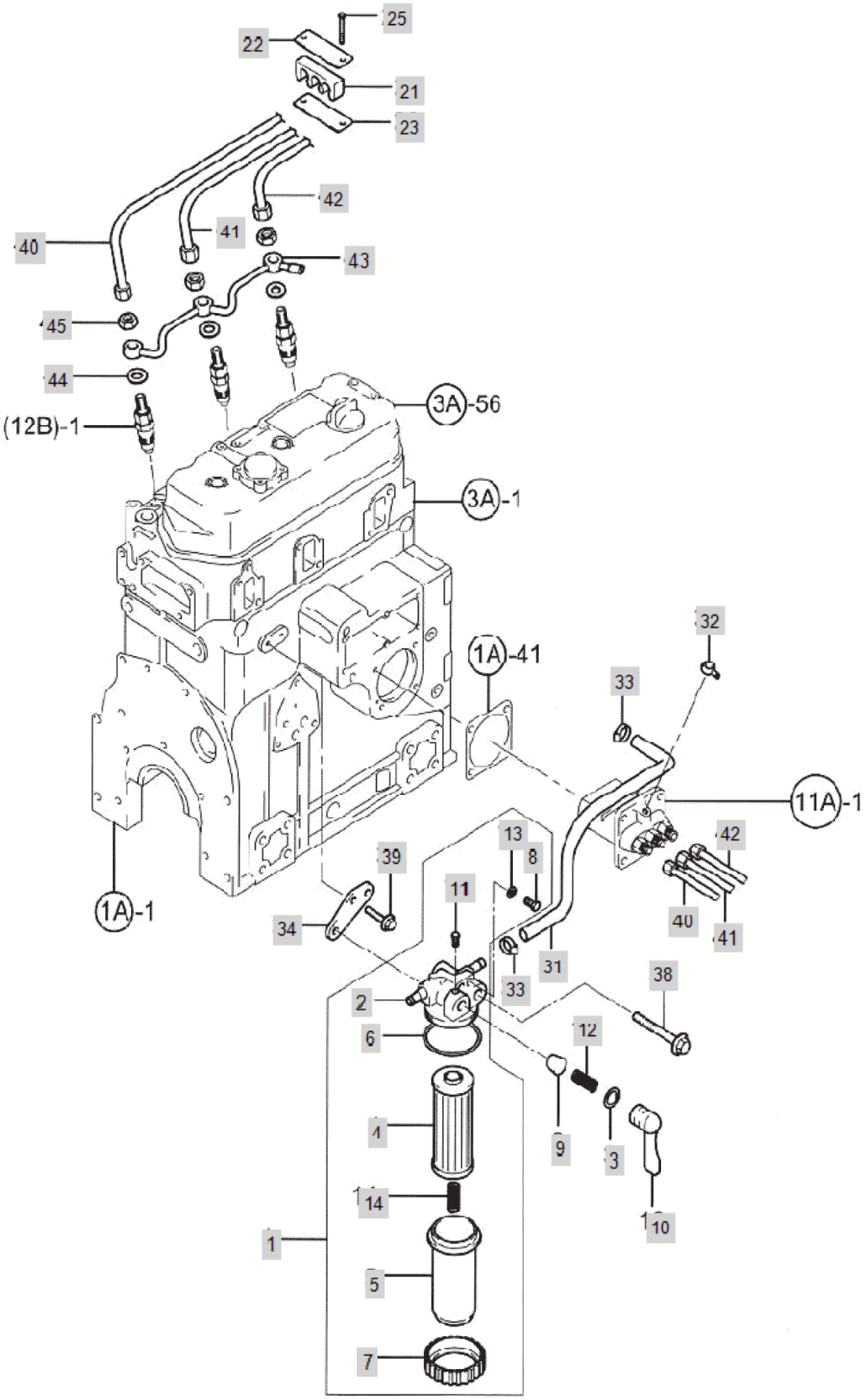

FIG E013 3520	FUEL INJECTION SYSTEM & VALVE	Year/Month 2020/02

KeyNo.	Part Number	Part Name	Quantity	Other
1	HA13010000A3	STRAINERASS'Y,FUEL	1	
2	HA13020000A9	FITER BODY	1	
3	24311-240100	SEAL, O-RING	1	
4	HA13040000A4	ELEMENT, FUEL FILTER	1	
5	HA13050000A4	CUP(FILLTER)	1	
6	AB14070501A4	RETAINER RING, FUEL FILTER	1	
7	AB14070501A4	RETAINER RING, FUEL FILTER	1	
8	AB14070502A4		2	
9	HA13090000A4		1	
10	AB14070901A4	LEVERFORFUELCOCK	1	
11	AB14071001A4	SETSCREWFORLEVER	1	
12	AB14071101A4	SPRINGFORTAPERVALVE	1	
13	23418-060000	PACKING6	2	
14	HA13140000A4	SPRING	1	
21	HA13230000A4	BRACKET,FUELPLUMBING	1	
22	HA13240000A4	CLAMP,TUBE	1	
23	HA13250000A4	CLAMP,TUBE	1	
25	26166-060169	BOLT 6X16	2	
31	HA13330000B4	HOSE	1	
32	HA13430000B4	JOINT,PIPE	1	
33	23000-013000	Clip, Hose (Φ13)	2	
34	HM13360000A4	BRACKRT,FUELFILTER	1	
38	26106-080652	SCREW,HEXFLANGEHEADCAP	1	
39	26106-080142	SCREW,HEXFLANGEHEADCAP	1	
40	HK13400000C	FUEL PIPE (A)	1	
41	HK13410000C0	FUELPIPEB	1	
42	HK13420000C0	FUELPIPEC	1	
43	HK13430000C3	DRAINPIPEASS`Y	1	
44	HK13440000A4	GASKET,FUELMANIFOLD	3	
45	HK13450000A4	NUT,REGULARHEXAGON	3	

FIG E014 3520	GOVERNOR	Year/Month 2020/02

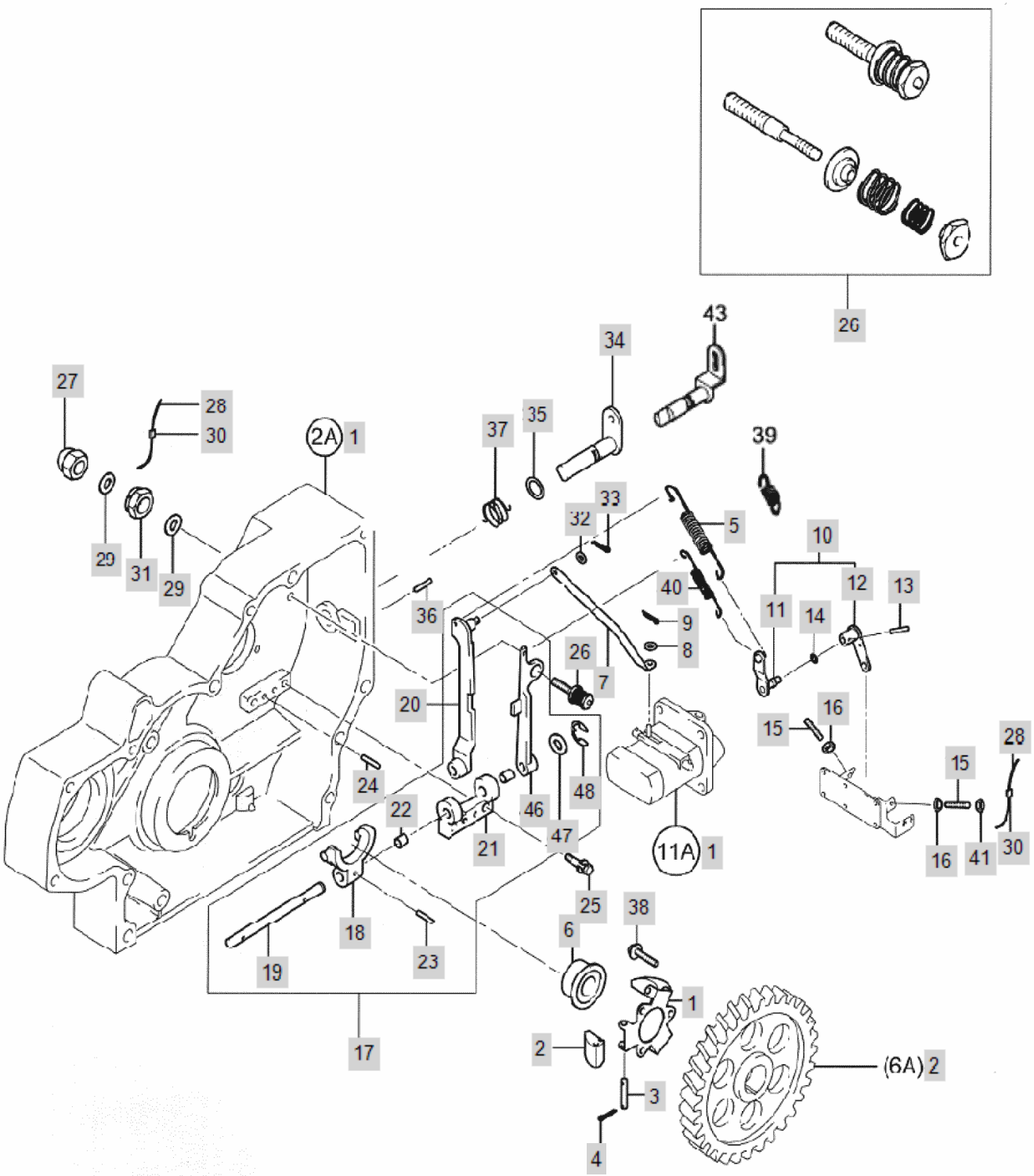

FIG E014 3520	GOVERNOR	Year/Month 2020/02

KeyNo.	Part Number	Part Name	Quantity	Other
1	HK14010000B4	SUPPORT,GOVERNORWEIGHT	1	
2	HK14020000B4	GOVERNORWEIGHT	3	
3	HK14030000A4	WEIGHTPIN	3	
4	22417-200160	PIN , COTTER (2-16)	6	
5	HP14050000D4		1	
6	HA14060000A4	GOVERNORSLEEVE	1	
7	HK14070000C3	GOVERNORLINK	1	
8	HA14350000A4	SPACER	1	
9	22360-060000	PIN , SNAP (6Φ)	1	
10	HM14100000A9	CONTROLLEVERASS`Y	1	
11	HK14110000C4	LEVER, ADJUST	1	
12	HK14120000A4		1	
13	22322-030180	PIN, TAPPER (3-18)	1	
14	24311-000070	O-RING, DYNAMIC (Φ7)	1	
15	HA14150000A4	BOLT,ADJUSTING	2	
16	HA14160000B4	NUT	2	
17	HA14170000E3	SUB TO-> HK14170000E3	1	
18	HA14170100C4	GOVERNOR LEVER 1ST	1	
19	HK17170200C4	GOVERNOR LEVER SHAFT	1	
20	HK14170300D4		1	
21	HK14180000D4	SUPPORT	1	
22	HK14170500A4	BUSH	2	
23	22322-030160	PIN, TAPPER (3-16)	1	
24	22312-040100	PIN, DOWEL (4-10)	2	
25	26013-060202	Bolt, Hexa (6-20)	2	
26	HP14200000B4	INJCONTROLLERASS`Y	1	
27	26667-080002	NUT	1	
28	22451-100200	WIRE	2	
29	HA01160000A3	SEALWASHER8	2	
30	HA14270000A4	LEAD, SEALING	2	
31	HA14400000B4	NUT	1	
32	22137-050000	WASHER, PLAIN (Φ 05)	1	
33	22417-200160	PIN , COTTER (2-16)	1	
34	HK14300000C4	STOP LEVER ASSY	1	
35	24311-000100	O-RING, DYNAMIC (Φ10)	1	
36	22322-030200	PIN, TAPPER (3-20)	1	
37	HK14370000B4	RETURNSPRING	1	
38	26106-060102	Bolt, Hexa (6-10)	3	
40	HP14400000B4	SPRING.IDLE	1	
41	HK14470000A4	NUT	1	
46	HK14470600A4	LEVER	1	
47	23414-070000	PACKING,BRONZE	1	
48	22272-000050	RING, CIRCLIP (Φ 05)	1	

FIG E015 3520	ELECTRONICAL PART & OTHERS	Year/Month 2020/02

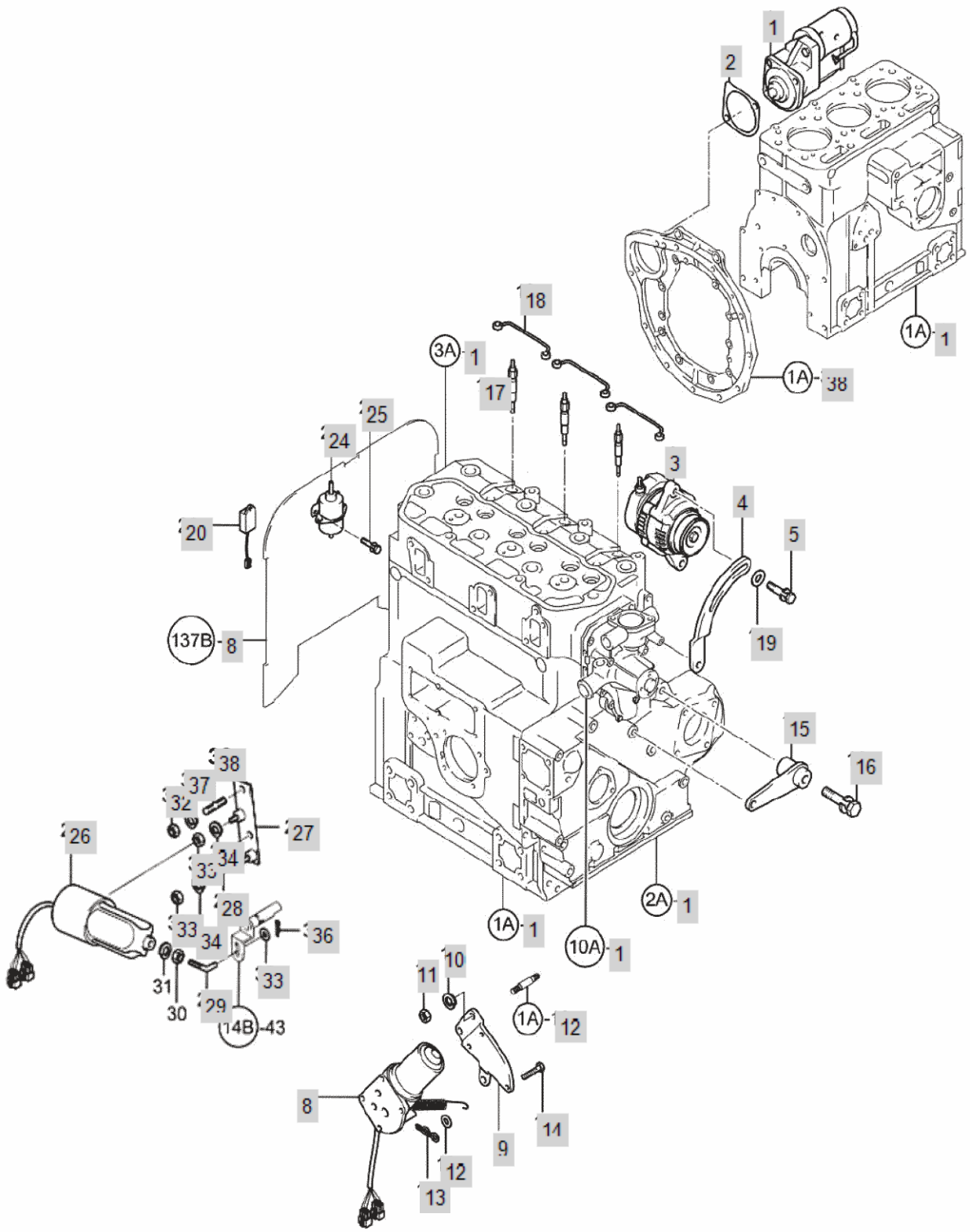

FIG E015 3520	ELECTRONICAL PART & OTHERS	Year/Month 2020/02

KeyNo.	Part Number	Part Name	Quantity	Other
1	HA15010000B1	STARTING MOTOR	1	
2	HA1521000EA4	PACKING(STARTER)	1	
3	HM24120000A2	GENERATOR	1	
4	HM24140000A3	BRACKET,BELTCONTROL	1	
5	26013-080302	HEX BOLT W/WASHER	1	
8	HK17030000B2	STOPMOTOR	1	
9	HK17040000B4		1	
10	22217-080000	WASHER, SPRING (Φ 08)	3	
11	26716-080002	NUT,HEX (D8)	3	
12	22117-080000	WASHER, PLAIN (Φ 08)	1	
13	26116-050122	HEXBOLT	1	
14	26116-050122	HEXBOLT	3	
15	HM24160000A4	BRACKET,GENERATOR	1	
16	26013-100852	SUB TO-> 26014-100852	1	
17	HK15170000A4	PLUG, PREHEAT	3	
18	HM15180000A4	CONNECTOR	3	
19	RR15170000A4	WASHER 8.5X20X3.2	1	
20	TZG1300000A4	GLOWTIMER	1	
24	HF20190000A2	FUEL FEED PUMP	1	
25	26014-060162	Bolt, Hexa (6-16)	1	
26	HM50260000A9	STOPSOLENOID	1	
27	HM50270000B4	BRACKET,SOLENOID	1	
28	26116-080142	BOLT	1	
29	HM50290000B4	BOLT*4	1	
32	26716-080002	NUT,HEX (D8)	1	
33	26716-060002	HEX NUT (Φ6)	1	
34	22217-060000	WASHER, SPRING (Φ 06)	1	
36	22360-060000	PIN , SNAP (6Φ)	1	
37	22217-080000	WASHER, SPRING (Φ 08)	1	
38	22360-080000	PIN , SNAP (8Φ)	1	